FEASIBILITY STUDY FOR HAZARDOUS WASTE MANAGEMENT IN EGYPT

FINAL REPORT

Prepared by:

ENVIRO ASSOCIATES INTERNATIONAL, INC.
COMMACK, New York

July 2009

This report was funded by the U.S. Trade and Development Agency (USTDA), an export promotion agency of the United States Government. The opinions, findings, conclusions, or recommendations expressed in this document are those of the author(s) and do not necessarily represent the official position or policies of USTDA.

Mailing and Delivery Address: 1000 Wilson Blvd., Suite 1600, Arlington, VA 22209
Phone: 703-875-4357 • Fax: 703-875-4009 • Web site: www.ustda.gov • email: info@ustda.gov

The U.S. Trade and Development Agency

The U.S. Trade and Development Agency Assists in the creation of jobs for Americans by helping U.S. companies pursue overseas business opportunities. Through the funding of feasibility studies, orientation visits, training grants, conferences, and various forms of technical assistance, TDA enables American businesses to become involved in the planning stages of infrastructure and industrial projects in middle-income and developing countries. By doing this, the agency provides American firms with market entry, exposure, and information, helping them establish a position in markets that are otherwise difficult to penetrate.

Mailing and Delivery Address: 1000 Wilson Blvd., Suite 1600, Arlington, VA 22209
Phone: 703-875-4357 • Fax: 703-875-4009 • Web site: www.ustda.gov • email: info@ustda.gov

TABLE OF CONTENTS

Page

1.0 INTRODUCTION……5

2.0 WASTE CHARACTERIZATION
2.1 Waste Inventory……..……7
2.2 Identification and Characterization of Hazardous Waste……10
2.3 Waste Sources……..……10
2.4 Hazardous Waste Sampling ……11
2.5 Hazardous Waste Identification…….…….....11

3.0 WASTE TREATMENT TECHNOLOGIES
3.1 Treatment technologies……...……15
3.2 Chemical Stabilization and Solidification……...16
3.3 Incineration……...……...21

4.0 CONCEPTUAL DESIGN OF CENTRALIZED TREATMENT AND DISPOSAL FACILITY (TSDF)
4.1 Overview…….……30
4.2 Design Criteria…….……30
4.3 Existing Hazardous Waste Treatment Facility……31
4.4 Conceptual Design of Hazardous Waste Treatment Facility ……..31

5.0 WASTE DISPOSAL IN LANDFILL
5.1 Landfill Design and Construction…….....34
5.2 Liner and Leachate Collection Systems ……..35
5.3 Landfill Cover System…….……36
5.4 Liner Materials……37
5.5 Landfill Stability……..40
5.6 Landfill Construction Quality Control…….....41
5.7 Landfill Operation……43
5.8 Groundwater Monitoring…….....45
5.9 Waste Collection and Transportation……..….46
5.10 Health and Safety…….....47
5.11 Landfill Economic Issues……...….50

6.0 PRELIMINARY ENVIRONMENTAL IMPACT ANALYSIS……..52

APPENDICES

Appendix 1: Hazardous Waste Regulations of Egypt Law 4

Appendix 2: Basel Hazardous Waste Management Guidelines
Appendix 3: Details of Paint Filter Test
Appendix 4: U.S. Suppliers of Hazardous Waste Treatment Products and Services
Appendix 5: Standards for Hazardous Waste Generator Facilities in the U.S.
Appendix 6: Standards for Hazardous Waste Treatment Storage and Disposal Facilities in the U.S.

LIST OF TABLES

Table 2-1 Hazardous Waste Types and Quantities in Alexandria

Table 2-2 Leachability Standards for TCLP test

Table 3-1 Effect of waste constituents on stabilization/solidification

Table 3-2 Full scale application case studies for stabilization/solidification

Table 5-1 Comparison of Single and Double Liners in Landfill

Table 5-2 Standrard Test Methods for Landfill Items

Table 5-3 Criteria for Long-term Cost for Landfills

Table 5-4 Criteria for O &M Cost for Landfills

LIST OF FIGURES

Fig. 3-1 Technology Screening for Stabilization/Solidification

Fig. 3-2 Schematic of Fixed Hearth Incinerator

Fig. 3-3 Schematic of Multiple Hearth Incinerator

Fig. 3-4 Schematic of Rotary Kiln Incinerator

Fig. 3-5 Schematic of Fluidized Bed Incinerator

Fig. 3-6 Schematic of Air Pollution Control System

Fig. 4-1 Layout of Existing Hazardous Waste Treatment Facility in Nasreya

Fig. 4-2 Process Flow Diagram of Hazardous Waste Treatment Facility

Fig. 5-1 Schematic of a Single Liner System

Fig. 5-2 Schematic of a Double Liner System

Fig. 5-3 Landfill Plan and Cross-Sections

Fig. 5-4 Landfill Miscellaneous Details

Fig. 5-5 Single-stage Landfill Phasing Plan

Fig. 5-6 Multi-stage Landfill Phasing Plan

Fig. 5-7 Landfill Gas Collection System (Temporary)

Fig. 5-8 Landfill Gas Collection System (Permanent)

Fig. 5-9 Typical Details of a Monitoring Well

1.0 INTRODUCTION

Egypt is one of the fast growing industrial countries in Africa and the Middle East. In recent years Egypt has seen a steady growth of industries, which has resulted in the handling of increased quantities of hazardous and toxic chemicals, and generation of a significant quantity of hazardous waste. With large quantities of hazardous waste generated in the industrial areas, and with only one permitted hazardous waste treatment and disposal facility in Alexandria, Egypt is faced with a critical problem for safe disposal of hazardous waste, nationwide.

Without adequate hazardous waste treatment and disposal facilities in Egypt, hazardous waste is either stored at the industrial facilities, or disposed in sanitary landfills, and in dump sites in desert areas without any treatment. Often times the waste piles catch fire due to heat and chemical reactions of incompatible hazardous wastes. At these dump sites, small groups of unorganized waste management contractors manually segregate the hazardous waste for recyclable materials, and sell them for reuse. Several issues of concern arise due to the current practice. First, handling of the hazardous waste at the dumpsites without proper training, no personal protection equipment (PPE), is a serious health and safety risk and exposure to the waste operators. Second, the recyclable materials are not adequately decontaminated, resulting in potential exposure of the end users to the toxic chemicals in the waste, and they may not be aware of the risks posed by the chemicals. The third issue is that the current method of uncontrolled disposal of the hazardous waste is a source of soil and water pollution, and a concern for the public health and the environment.

Due to the current situation with hazardous waste management, the Ministry of Environment has determined that there is an imminent need for constructing hazardous waste treatment and disposal facilities nationwide in Egypt. In the two major industrial city areas, Cairo, and Alexandria, the quantity of industrial waste generated is approximately 60,000 tons/year. Of this quantity, Alexandria generates approximately 28,000 tons /year of hazardous wastes. There are approximately eight industrial areas in Egypt generating different types and quantities of hazardous wastes. It is estimated that up to a total of 200,000 tons/year of hazardous waste are generated from the eight areas.

In spite of the environmental Protection Law 4 and hazardous waste regulations, the Ministry of Environment is faced with the challenge of enforcing proper disposal of hazardous waste, because of the absence of treatment and disposal facilities.

On the request of the Ministry of Environment, Egypt, the U.S. Trade and Development Agency (USTDA) have awarded a Grant for conducting a Feasibility Study to evaluate the needs for hazardous waste treatment and disposal facilities in Egypt. In addition to the Study, included in the Grant is the supply of a Demonstration Unit for incineration of hazardous waste. The scope of the Feasibility Study is primarily applicable to the existing permitted hazardous waste treatment and

disposal facility in Nasreya, near Alexandria. The objective of the Study is to evaluate the feasibility of an expanded hazardous waste treatment facility at the Nasreya location, and propose the conceptual design of the expanded facility's treatment units. The Demonstration Unit will be installed at the Nasreya facility.

This document is the Feasibility Study Report.

2.0 WASTE CHARACTERIZATION

2.1 Waste Inventory

An inventory of hazardous wastes generated in the Alexandria area was prepared by the Nasreya hazardous waste treatment facility. Since hazardous waste collection and management in the Alexandria area for treatment and disposal at the Nasreya facility is a relatively recent activity, the waste inventory represents the best data currently available. It may not reflect accurately the total quantity and types of hazardous wastes generated in the Alexandria area. Table 2-1 presents the hazardous waste inventory data.

It is envisioned that there is uncertainty in the data on types and quantity of hazardous wastes generated, due to several reasons as follows: 1) hazardous and non-hazardous wastes are often combined, and segregated waste stream data may not be available, 2) uncertainty in characterization of hazardous wastes, 3) unavailability of reliable data sources on waste quantities, and 4) not all industrial hazardous waste sources are included. It is anticipated that more specific and reliable data will be available in the future once the Nasreya TSDF is expanded in capacity with more types of treatment units becoming available, and increased enforcement resulting in hazardous wastes being disposed at the TSDF.

Based on the available information on types of hazardous wastes, the waste streams are summarized in three categories: solid, liquids, and sledges:

1. **Solid Hazardous Waste:** The data indicates approximately 1718 tons per year of solid hazardous waste. These wastes would be transported into the facility mostly in drums or in bulk.

2. **Liquid Hazardous Waste:** The data indicates 26,047 tons per year of liquid hazardous waste, with a large quantity being from the pharmaceutical and chemical industries, and the balance being wastewater containing oil and hydrocarbons, spent solvents, and waste oils. The data identifies a third category of hazardous wastes, in the form of sludge. These wastes may be paint sledges, still bottoms and sledges from petroleum refineries, and dewatered sludge from metal plating wastewater treatment operations. Depending on the waste generating processes, the sludges may be generally considered a liquid waste due to its high liquid content.

3. **Hazardous Sludge:** Approximately 135 tons per year of hazardous sludge are generated.

The total quantity of hazardous wastes generated is approximately 27,900 tons per year.

TABLE 2-1 Hazardous Waste Types and Quantities (Alexandria)

	SOLID		LIQUID		SLUDGE	
	Type of Waste	**Qty. (ton)**	**Type of Waste**	**Qty. (ton)**	**Type of Waste**	**Qty. (ton)**
1.	Bleaching dust	520	Waste paints and solvents	0.5	Mazot sludge	15.06
2.	PVC	17	Used oils	27.5		
3.	Oil rags	5.4	Oil and grease	435	Industrial organic sludge	82.8
4.	Contaminated sand and dust	16	Oils and Acids	2.8		
5.	Rags contaminated with solvents	2.5	Mineral oils	1.5	Sludge from biological treatment	
6.	Expired magnetic spray cans	0.282	Residue of acids and solvents	N.A.		
7.	Expired medicine	36	Solvents and inks	7.5	Organic waste deposits	0.1
8.	Used clay of kerosene	350	Liquid waste from washing of machines	N.A.	Nitrogenic sludge	0.5
9.	Fine PVC result from process	4	Hydraulic oils	0.2		
10.	Fine sawdust (PVC)	2	Waste oil from maintenance	5	Deposits from washing reactors	24
11.	Contaminated rags	2.08	Solvents	55		
12.	Residue of solvents containing dyes	5.25	Waste water from washing the floor	1.2	Waste from recycling of solvents	12
13	Residue of glue (latex)	N.A.	Amine from CO2 removal	14		
14	Empty drums	N.A.	Chloroform	0.12		
15	Acrylic plates	2	H2SO4 contain oil and Cadmium	N.A.		
16	Inhibitor substances	0.15	Organic liquids used for pesticide	3.5		
17.	Empty resin vessels	0.01	Silane (SiH4)	6		
18.	Empty resin activator vessels	0.01	Liquids of medicine (expired)	N.A.		
19.	Adhesives	12	-Topanol A-dimethyl 6 – t butyllphenol -Bacteria aerobic @anaerobic in 7 tubes (10 cm, 15 cm)	4.81 N.A.		
20.	Expired Filters	70.01				

TABLE 2-1 Hazardous Waste Types and Quantities (Alexandria)

	SOLID		LIQUID		SLUDGE	
	Type of Waste	**Qty. (ton)**	**Type of Waste**	**Qty. (ton)**	**Type of Waste**	**Qty. (ton)**
21.	Filter cloth 2 types : non toxic & toxic contain sodium thiocyanate Expired paints poly amide EP primer Poly amide BB epoxy	0.5	Expired paints poly amide EP primer Poly amide BB epoxy	1		
22.	Poly urethane finish coat	1	Poly urethane finish coat	1		
23.	Rags contaminated by thinner	60	Thinner waste	2		
24.	Polyurethane	6				
25.	Resin di vinyl benzene polystyrene powder	5				
26.	Empty pesticide plastic vessels & paper vessels	100				
27.	Expired medicine	500				
28.	Expired chemicals – vinyl acetate copolymer resin, Polyamide powder	1.125	Liquid waste sodium ligno sulfate % Sodium naphthaline sulphonate 40% Sugar 20%	480		
29.	Reaction accelators N-(1.3-dimethylbutyl)-N-phenyl-p-phenylenediamine 1,4-benzenediamine, N-(1.3-dimethylbutyl)-N-phenyl	0.125				
	Sub total	**1718.742**		**26,048.63**		**134.46**
	Total Organic Hazardous Waste (Ton/yr)	**27,902**				

Source: Nasreya Hazardous Waste Management Unit (HWMU), Alexandria

2.2 Identification and Characterization of Hazardous Waste

All industrial wastes are not necessarily hazardous, although industries account for the majority of hazardous wastes generated. Collection, transport, treatment and disposal of hazardous waste are more expensive than for non-hazardous waste. It is important therefore to accurately identify and characterize hazardous wastes at the industry sources. Every effort must be made to reuse or recycle discarded materials prior to land disposal. The first step is to evaluate the process flow diagram in the industry to identify waste streams that need to be disposed. Each of the waste streams must be tested to determine whether the waste is hazardous. The following discussion addresses the potential waste sources, and procedures for identification and characterization of hazardous wastes.

2.3 Waste Sources

In a community, in addition to industries, hazardous waste is found in the following four sources: households, commercial establishments, and health care facilities and teaching and research institutions. Proper management of hazardous waste from all sources is essential to protect the environment and health and safety of the citizens. A small volume of hazardous waste and radioactive waste is generally found in health care facilities. Teaching and research institutions may also generate hazardous waste and radioactive waste. Generation of radioactive waste in these institutions depends on level of research. Although brief descriptions of hazardous wastes generated in the above four sources are included, the report will concentrate on hazardous waste generated from industries.

Commercial Waste

Composition of waste from commercial establishments is similar to household waste, with the exception that it may contain a significant volume of food waste and electronic waste (e-waste). In the U.S it is estimated that food waste is 30% of waste generated in restaurants. There should be more disposal restrictions on commercial waste. For instance, commercial establishments should not be allowed to dispose hazardous waste and e-waste along with municipal wastes generated in these establishments.

Bio-hazardous waste

Waste from healthcare facilities (e.g., hospitals, clinics) is commonly termed medical waste or bio-hazardous waste. Bio-hazardous waste is a mixture of non-hazardous waste (e.g. drug packaging, papers, cafeteria waste), infectious waste (e.g., waste from surgical rooms, bloody towels), and hazardous waste (e.g., some of the pharmaceutical wastes are hazardous waste). In addition, medical waste may also contain low-level radioactive waste (e.g., chemotherapy waste). In addition to healthcare facilities, bio-hazardous waste may be generated in educational and

research institutions (e.g., colleges where biological experiments are conducted).

2.4 Hazardous Waste Sampling

The raw material safety data sheets, which identify the chemicals used in the industrial process, are to be studied to obtain probable constituents of the waste. Based on this information and the chemical composition of the product, a list of probable chemicals in the waste stream(s) may be developed. Only the wastes leaving the factory building are to be characterized. The next step in waste characterization is to decide sampling frequency and volume. The sampling should be done in such a way that the test data represents the probable range of concentration of various chemicals. Thus, a single grab sample from a waste dump should not be used to characterize a waste. Waste characteristics may vary due to the variability of raw material input. Such variation in input and its travel time from the start to the finish of the process is to be taken into consideration in deciding sampling frequency. At a minimum, two samples are to be collected within a raw material input variation period, and composited to form one representative sample. Tests on these samples are expected to provide the concentration range of the chemicals, and help in deciding disposal options. Random sampling may also be used; in general, random samples are better for known waste category (i.e. hazardous vs. non-hazardous). Random samples may be composited to obtain a representative sample. If a waste stream has never been characterized, then samples collected at regular intervals (e.g., every two hours) should be tested separatelyto determine whether the waste is hazardous. If all tests indicate the waste is hazardous then three or four random samples should be collected and composited for leaching test.

In the absence of an accepted practice, the following sampling protocols may be used for various waste types: (ref ASTM, 1989)

ASTM Standard D140-70 for extremely viscous liquid
ASTM Standard D346-75 for crushed or powdered waste
ASTM Standard D420-69 for soil or rock-like waste
ASTM Standard D1452-65 for soil type waste
ASTM Standard D2234-76 for fly ash type waste

2.5 Hazardous Waste Identification

The nationally adopted protocol of the Ministry of Environmental Affairs in Egypt, as specified in Law 4 (Appendix 1) and its subsequent decrees and regulations on hazardous waste management should be used for testing of wastes to determine if the waste is a hazardous waste. In addition, the Basel Convention protocols (Appendix 2) may also be used if certain test procedures for hazardous waste characterization are not available in Law 4. Per the Egyptian regulations, a hazardous waste is identified in the two following steps:

1. A waste is considered hazardous if it is included on a list published by the

Ministry of Environment, Egypt.

2. If the waste is not listed as a hazardous waste then it is considered hazardous if it shows any hazardous characteristics. The following four characteristics are used to identify hazardous waste:

   a. **Corrosivity**: If the waste is aqueous, has a pH less than 2 or greater than 12.5 and corrodes plain carbon steel (carbon content of 0.2%) at the rate of 6.35 mm or greater per year at 55 degrees C, then the waste is characterized as corrosive waste.

   b. **Ignitability**: If the waste is liquid other than an aqueous solution containing less than 24% alcohol by volume, and has flash point of less than 60^0 C as determined by ASTM test D93-79 or D93-80, it is characterized as ignitable waste. A non-liquid waste (other than gaseous) is also characterized as ignitable if it causes fire at 0^0 C and at a pressure of 1 atm through friction, absorption of moisture or spontaneous chemical changes or burns vigorously creating a fire hazard. For gaseous waste, the ignitability is determined by ASTM D-323.

   c. **Reactivity**: A waste is characterized as reactive if it is normally unstable and undergoes violent change without detonating or if it reacts violently with water, or forms a potentially explosive mixture with water, generates significant quantities of toxic gas when mixed with water endangering human health or the environment.

   d. **TCLP Toxicity**: The USEPA has developed a standard test based on the leachability toxicity characteristic of a waste to define if a waste is hazardous waste. This test is called the Toxicity Characteristic Leaching Procedure test (TCLP). The TCLP test uses two leaching media: pH 5 acetate buffer and 0.5N acetic acid. The choice of the leaching media depends on whether the waste is classified as highly alkaline. The 0.5N acetic acid is used for highly alkaline waste and the pH 5 acetate buffer is used for all other waste. After subjecting the waste to contact with the leaching media for several hours, the leachate is analyzed for specified compounds. The analysis is done for 40 chemicals (Table 2-2). A waste is classified as hazardous if the leach test shows concentration of one or more of the 40 chemicals at or above the indicated regulatory level.

TABLE 2-2 Toxicity Characteristics Contaminants and Limits (per TCLP)

Contaminant	Regulatory Level (mg/liter)
Arnenic	5.0
Barium	100.0
Benzene	0.5
Cadmium	1.0
Carbon tetrachloride	0.5
Chlordane	0.03
Chlorobenzene	100.0
Chloroform	6.0
Chromium	5.0
m-Cresol	200.0
o-Cresol	200.0
p-Cresol	200.0
Cresol	200.0
2,4 D	10.00
2,4-Dichlorobenzene	7.5
1,2-Dichloroethane	0.5
1,1-Dichloroethylene	0.7
2,4-Dinitrotoluene	0.13
Endrin	0.02
Heptachlor (and its epoxide)	0.008
Hexachlorobenzene	0.13
Hexachlorobutadiene	0.5
Hexachloroethane	3.0
Lead	5.0
Lindane	0.4
Mercury	0.2
Methoxychlor	10.0
Methyl ethyl ketone	200.0
Nitrobenzene	2.0
Pentachlorophenol	100.0
Pyridine	5.0
Selenium	1.0
Silver	5.0
Tetrachloroethylene	0.7
Toxaphene	0.5
Trichloroethylene	0.5
2,4,5-Trichlorophenol	400.0
2,4,6-Trichlorophenol	2.0
2,4,5-TP (Silvex)	1.0
Vinyl chloride	0.2

Hazardous waste must not be disposed in landfills without pretreatment unless it is a solid hazardous waste with minimum potential for leachate generation. Concentration of all chemicals required for TCLP test must be below the regulatory levels. It is a good practice to reduce the liquid content of waste prior to land disposal, which will help in reducing leachate formation. Solid hazardous wastes should not be disposed in a landfill if it contains 'free liquids'. Wastes are considered to be containing 'free liquids' when it exceeds a certain percent of liquids based on a standard Paint Filter Test. Appendix 3 presents the procedure for the Paint Filter Test. A standard Paint Filter Test should be conducted to determine if a waste contains 'free liquids'. Wastes containing 'free liquids' must be either dewatered or solidified, before disposing in the landfill.

Interaction between different waste types should be studied before disposing them together in hazardous waste landfills where multiple waste types are disposed. If necessary, separate cell(s) should be developed for one or more waste types. It is possible that interaction between two waste types may be vigorous leading to heat and fume generation. Such interaction may deteriorate the landfill liner. In addition, waste with the following characteristics should not be disposed in landfills.

a. Waste with high percentages of volatile organic content.
b. Waste with high percentages of aromatic, halogenated compounds.
c. Wastes with high percentages of arsenic, cadmium, lead, mercury and selenium.
d. Waste with high percentages of cyanide, and sulfide.

3.0 WASTE TREATMENT TECHNOLOGIES

3.1 Treatment Technologies

Hazardous waste treatment encompasses a wide variety of treatment technologies available for different types of hazardous wastes. The selection of a suitable treatment technology is based on three key factors, effectiveness, implementability, and cost. Review of the types of hazardous wastes typically generated in the Alexandria area indicates that manufacturing facilities of several industry sectors exist in this area. Consequently, a number of different types of inorganic and organic hazardous wastes, both solid and liquid, are generated which require proper treatment and disposal. Currently, the existing hazardous waste treatment and disposal facility in Nasreya (HWMU), outside of Alexandria is the only hazardous waste treatment facility in Egypt. The facility has a landfill designed primarily for disposal of inorganic hazardous wastes. As evident from the types of hazardous wastes generated in the Alexandria area (Table 2-1), there is a need for treatment and disposal of a wide variety of inorganic and organic hazardous wastes. In this section, discussion is focused on treatment technologies which would be applicable to these hazardous wastes generated in the Alexandria area.

For purposes of hazardous waste treatment at the Alexandria facility, the hazardous wastes are classified into two most common types of wastes, which are solid and liquid wastes. A third type comprises of sludge, which may be either included as solid or liquid wastes. Basically, solid hazardous wastes are assumed to be directly disposed in the landfill at the facility. Liquid wastes are not permitted to be disposed directly in the landfill. Liquid wastes or sludges containing free liquids are proposed to be treated either by dewatering, or chemical stabilization and/or solidification before landfill disposal. Selected liquid wastes such as spent solvents are proposed to be treated in a solvent recycling unit for reuse offsite. Non-recoverable combustible liquids may be treated in an on-site incinerator, or shipped off-site for use as fuel in a cement or lime kiln. The primary hazardous waste treatment unit at this time is the chemical stabilization system. While incineration is an effective treatment and destruction technology, a large scale incinerator is not recommended at this time because of several reasons, such as limited waste quantity for incineration to be cost effective, lack of reliable data on waste generation, uncertainty in wastes to be disposed at the facility, and the overall high cost of a large scale incinerator equipped with the necessary air emission control and treatment systems. A small-scale incinerator is recommended to be used as pilot test equipment until conditions are suitable to cost-effectively justify the installation and operation of a large-scale incinerator.

3.2 Chemical Stabilization and Solidification

Chemical stabilization is the chemical technology used to detoxify, immobilize or otherwise render a waste component less hazardous, or less capable of leaching into the environment. Chemical stabilization is often the process used as a pretreatment or in conjunction with solidification prior to landfill disposal of liquid wastes. Depending on the type and nature of the waste, several types of chemical additives are used in stabilization, most common ones being pozzolonic materials like cement, cement or lime kiln dust, lime, and fly ash.

Prior to conducting chemical stabilization and solidification, it is critical to evaluate the nature and characteristics of the waste to determine suitability for stabilization. This step includes a technology screening procedure to determine applicability and limitations of the waste and the stabilization process. It is recommended that a technology screening be applied to determine suitability for stabilization based on chemical compatibility, health and safety and stabilization procedures to be used at the site. Figure 3-1 presents a technology screening procedure and decision matrix for stabilization and solidification. Presence of certain constituents in the waste, and the homogeneity of the waste will affect the effectiveness of the stabilization process. Information on effect of some common waste components on the stabilization and solidification processes is presented in Table 3-1.). Table 3-2 provides a list of some hazardous waste treatment facilities in the U.S.A. with chemical stabilization and solidification treatment systems.

Chemical stabilization is an effective and common treatment method for inorganic hazardous wastes. Examples of chemical stabilization treatment include 1) sorption of heavy metals either on flyash or on the surfaces of carbonaceous materials, 2) ion exchange of heavy metals within an aluminosilicate matrix, 3) addition of precipitating agents to form an insoluble metal-polyelectrolyte or organo-metal complex, 4) the immobilization of cyanide in a waste residue as an insoluble metal-cyanide complex, and 5) the formation of copper arsenides from soluble copper and arsenic compounds in solution. Many wastes, such as sludges may not require chemical stabilization, but should be solidified to transform the residue into a physical form that has reduced leachability characteristics when disposed in a landfill. In some cases of relatively large volume liquid wastes, dewatering using an evaporation pond may be suitable to reduce volume of waste prior to stabilization and solidification before landfill disposal.

One of the major limitations of a conventional chemical stabilization system is its limited applicability to organic wastes, particularly those containing solvents, and petroleum oils. Presence of solvents like phenol or alcohol, often impede the chemical stabilization setting process when cement or pozzolonic materials are used. In such cases, options to consider would be solidification into a matrix of bituminous asphalt like material with or without admixtures like soil, sand or gravel.

Table 3-1 Effect of waste components on stabilization/solidification process

Waste Component	Cement-based	Pozzolan-based	Thermoplastic	Organic Polymer
Organics (Nonpolar): Oil and grease, aromatic hydrocarbons, halogenated hydrocarbons, PCB's	May impede setting. Decreases durability over a long time period. Volatiles may escape upon mixing. Demonstrated effectiveness under certain conditions.	May impede setting. Decreases durability over a long time period. Volatiles may escape upon mixing. Demonstrated effectiveness under certain conditions.	Organics may vaporize upon heating. Demonstrated effectiveness under certain conditions.	May impede setting. Demonstrated effectiveness under certain conditions.
Organics (Polar): Alcohols, phenols, organic acids, glycols	Phenol will significantly retard setting and will decrease durability in the short run. Decreases durability over a long time period	Phenol will significantly retard setting and will decrease durability in the short run. Alcohols may retard setting. Decreases durability over a long time period.	Organics may vaporize upon heating.	No significant effect on setting.
Acids Hydrochloric acid, Hydrofluoric acid	No significant effect on setting. Cement will neutralize acids. Types II and IV Portland cement demonstrates better durability characteristics than Type I. Demonstrated effectiveness.	No significant effect on setting. Compatible, will neutralize acids. Demonstrated effectiveness.	Can be neutralized before incorporation.	Can be neutralized before incorporation. Urea formaldehyde demonstrated to be effective.
Oxidizers Sodium hypochlorite, potassium permanganate, nitric acid, potassium dichromate	Compatible	Compatible	May cause matrix breakdown, fire.	May cause matrix breakdown, fire.
Salts sulfates, halides, nitrates, cyanides	Increase setting times. Decrease durability. Sulfates may retard setting and cause spalling unless special cement is used. Sulfates accelerate other reactions.	Halides are easily leached and retard setting. Halides may retard setting, most are easily leached. Sulfates can retard or accelerate reactions.	Sulfates and halides may dehydrate and rehydrate, causing splitting.	Compatible
Heavy Metals Lead, chromium, cadmium, arsenic, mercury	Compatible. Can increase set time. Demonstrated effectiveness on certain species(lead, cadmium, chromium)	Compatible. Demonstrated effectiveness on certain species (lead, cadmium, chromium).	Compatible. Demonstrated effectiveness on certain species (copper, arsenic, chromium).	Compatible. Demonstrated effectiveness with arsenic
Radioactive Materials	Compatible	Compatible	Compatible	Compatible

Table 3-2 Stabilization and Solidification Case Studies in the U.S.A.

Site/location	Contaminant (concentration)	Treatment Volume	Physical Form	Binder	Percentage Binder(s) added	Volume Increase
South Carolina	Zn, cr, Cd, ni	6,600yd	Solid/soils	Portland cement	20%	>Small
Midwest	Cu, Cr, ni	16,oooyd	Sludge	Portland cement	20%	>0
Arizona	Pb, cd	150,000yd	Dry - landfill	Portland cement and silicates (Toxsorb)	Varied 7-15% (cement)	NA
Alaska	Oil/oil sludges	2,300 yd	Sludges, variable	Portland Cement and proprietary	Varied 50+	>35%
Kentucky	Vinyl chloride Ethylene dichloride	180,000yd	Sludges, variable	Portland Cement and proprietary	Varied 25+	>7-9%
ENRECO	Oil sludges, Pb, Cr, As	100,000yd	Sludges, variable	Kiln dust (high CaO content)	Varied, 15-30%	>Varied ~20% average
Tennessee	Pesticides and organics (resins, etc.) up to 45% organic	20,000,000 gallons	Sludges, variable	Portland Cement and kiln dust proprietary	Varied (cement 5-15%)	>Varied ~10% or less
New Jersey	Oil/solids Cd, Cr, Pb	90,000,000 gallons	Sludges	Chemfix proprietary	NA, proprietary	Average 15%
Florida	Oil sat : soil Pb – 1000 ppm PCB's – 200 ppm As – 1-200 ppm	60,000 yd (plus 5000 tons of surface debris)	Soils	Pozzolanic and proprietary	~30%	~1%
Ohio	Waste acid PCB's (<500 ppm), dioxins	~235,000 yd	Sludges (viscous)	Lime and kiln dust	~15% CaO ~5% kiln dust	>9%
Georgia	Creosote wastes	12,000 yd	Sludges	Kiln dust	20%	>~14%
Michigan	Various/ combined	20 million gal/yr	Various	Lime		
Texas	Combined metals, sulfur, oil sludges, etc.	90,000 gal. (445 yd)	Sludges (synthetic oil sludges)	Portland Cement and proprietary	NA	
Puerto Rico	API separator sludges	100 yd	Sludges	Portland Cement and proprietary	50% cement ~4% proprietary	>~4-5%
Wisconsin	Al – 9500 ppm Ni – 750 ppm Cr – 220 ppm Cu – 2000 ppm	3000 yd	Sludges	Lime	10-25%	>~4-10%

An important component of the chemical stabilization and solidification process is evaluation of leachability characteristics of the stabilized waste. This characteristic is essential to determine suitability for landfill disposal to ensure acceptable leachability characteristics. High leachability of wastes would result in significant increased generation of leachate in the landfill. The measure of leachability is often related to the hydraulic conductivity of the stabilized waste performed using standard permeability tests. Water is permeated through the test sample under standard test conditions in a permeameter, and the hydraulic conductivity is measured. Typical hydraulic conductivities for stabilized wastes range from 10^{-4} to 10^{-6} cm/sec. Hydraulic conductivities of less than 10^{-5} cm/sec is recommended for stabilized waste disposed in landfill. There are two types of standard permeability tests: 1) the constant head test, and 2) the falling head test. The falling head test is generally recommended for materials with hydraulic conductivity of less than 10^{-5} cm/sec. In addition to the permeability tests, chemical measure of leachability is determined by extraction tests in the laboratory on the stabilized material. The most common extraction test is the USEPA Toxicity Characteristic Leaching Procedure (TCLP). This test exposes the test sample to an acid solution for an overnight period for extraction, and measures concentration of selected contaminants in the extracted leachate. A TCLP standard criteria of acceptable contaminants and concentration is used to compare the leachate contaminants to determine acceptability of leachability characteristics.

On-site activities for stabilization and solidification

Once the chemical stabilization process applicable to the waste is selected, field procedures will be implemented for the process. This section describes the field procedures applied for implementing stabilization and solidification treatment. The operations described frequently use standard earthmoving equipment such as bull dozers, back hoes, dump trucks, and loaders. Generally most hazardous waste stabilization/solidification operations may be classified into two types: 1) lime-silicate based stabilization, which results in a product similar to mortar, and 2) stabilization using cement and other pozzolonic material resulting in soil like material as end product. Appendix 4 provides a list of major suppliers of equipment and supplies for chemical stabilization and solidification.

Regardless of the stabilization and solidification process, typically the field operations involve the following components:

1) Untreated waste transport
2) Untreated waste storage
3) Chemical reagent storage
4) Waste/reagent mixing
5) Stabilized/solidified waste transportation
6) Stabilized/solidified waste placement in landfill
7) Health and Safety aspects

Untreated waste transport

Depending on the nature of the waste, the waste can be transported by dump truck. Dump trucks are acceptable when the liquid content is low and the travel distance is short. During transportation, spillage must be particularly considered since the waste is hazardous. Truck beds should be lined with plastic to prevent escape of waste, particularly if the waste contains liquids. The trucks should be covered with tarpaulins. Before leaving the hazardous waste facility, the trucks must be thoroughly decontaminated with water rinses. The water must be collected for proper on-site treatment and disposal.

Untreated waste storage

Often untreated hazardous waste has to be stored at the hazardous waste facility prior to stabilization treatment. The storage area should incorporate the following features:

- A 2 to 3 percent sloping of the storage area to provide collection of liquids.
- Lining of the storage area with a high-density polyethylene membrane liner and sand. If possible, the area should be paved.
- Installation of drainage pipes and a sump for collection of liquids.
- A centralized wastewater treatment system for treatment of the liquids.
- Covering of the wastes to prevent their dispersion.
- Berming of the sides of the area to contain the wastes and liquids.
- Installation of a cement loading ramp for the unloading of wastes from trucks.
- Provision of a rubber-tired from-end loader to move wastes within the storage area.

Chemical/Reagent Storage

Primary requirements for this storage area are:

- Covered storage area, with locking facilities.
- Sufficient storage of chemical agents to prevent delays in operation.
- Ability to keep the agents dry.
- Ease of unloading upon delivery from the supplier and to the process. Usually bins and hoppers are the primary storage mechanisms for solid agents. Liquids to be stored in tanks. Silos are often used if bulk storage of lime is required. In that case, special procedures must be in place for proper lime handling and mixing.
- Chemical compatibility of agents stored.
- Spill prevention and collection facilities using paved area with sumps.

Waste and Reagent Mixing

The major component of the stabilization operations is the mixing process of the waste and agents. Most common method is area mixing in which the agent is applied

to a designated area containing the waste. Using backhoe type equipment, mixing is accomplished. Depending on the waste and agent, backhoe mixing may not be suitable to obtain a homogenized mixed waste. In some cases, pug mill is used to obtain better mixing, particularly if the waste contains liquids and solids. Proper Quality Control and Quality Assurance procedures must be followed to ensure that satisfactory quality of stabilization treatment has been accomplished. Random sampling of the stabilized waste is recommended for inspection and testing as needed.

Stabilized waste transport

Stabilized waste may be transported to the landfill using dump trucks. It is generally easier to transport than the untreated waste because the stabilized waste should be relatively dry and does not have free liquids. One aspect is to be noted, which is that the stabilized waste may set up in the truck like cement, if it is held too long during transport. Operations must be well coordinated between stabilization and transport/disposal to avoid such problems.

Stabilized waste placement in landfill

The placement of the stabilized waste should be performed in accordance with the standard landfill procedures. Usually the wastes should be placed in lifts of 8 to 10 inches with earth moving equipment such as graders or bulldozers. After the waste is placed, it is to be compacted to assure proper compaction per landfill operations procedures. If necessary, moisture may have to be added to ensure proper compaction. Sheepsfoot rollers are one of the preferred equipment to be used for efficient and proper compaction in landfills. In Appendix 4 of this report, contact information on vendors of manufacturers and suppliers of equipment for field operations for stabilization is provided.

Health and Safety aspects

In operating a chemical stabilization system for hazardous waste treatment, health and safety procedures must be followed. Generally, personal protection can be achieved by use of goggles, masks, hard hats, and protective clothing, and using selective inhalators. Proper equipment design and recommended safety procedures must be followed. Regular health and safety training procedures, as required for the overall hazardous waste facility, if followed, should be adequate for operating personnel at the stabilization area.

3.3 Incineration

Incineration is the second key treatment operations proposed in the Nasreya TSDF facility. Some of the hazardous wastes, such as waste oils, non-recoverable solvent wastes, and other combustible wastes are suitable for incineration. However, the total quantity of incinerable hazardous wastes generated (Table 2-1) is relatively small to justify a large scale incinerator at the Nasreya facility at this time. One option is to

ship the combustible wastes offsite to cement or lime kiln operating facilities for burning as supplemental fuel. The small incinerator recently installed onsite at the Nasreya facility may be used for now as a pilot operation to treat the combustible wastes in batches. The ash would be disposed in the landfill. It is envisioned that with increased enforcement, and more industries sending hazardous wastes to this facility, the data on quantity of hazardous waste generated would be updated and more accurate data will be available in future. The need for an incinerator should be evaluated at that time when more reliable data becomes available. For purposes of this report, some general information on incineration of hazardous wastes is discussed.

Incineration is the conversion of waste materials to gaseous products and solid residues by the process of combustion. In the combustion process, organic material (primarily hydrogen and carbon) react chemically at high temperatures with the oxygen in air to produce gases (carbon dioxide, and water in the form of steam). However, other elements present (nitrogen, chlorine, sulfur, trace metals) produce gaseous air pollutants (nitrogen oxides, hydrogen chloride, sulfur dioxide, and trioxide) and particulates. Thus the challenge to the designer of an incineration system is to produce as complete combustion as practical, using an optimum selection of governing parameters (time, temperature, and turbulence), and to provide air pollution control devices for control of air pollutants.

Conventional incineration technology is capable of destroying organics in wastes to very high efficiencies, typically in the order of 99.999 to 99.9999%, except when the toxic compound concentration in the waste feed is very low. A minimum destruction and removal efficiency (DRE) of “four nines” (99.99%), as required in most regulations, is equivalent to discharging less than 1 pound of compound per 10,000 pounds of toxic compound burned. It should be noted that only a fraction of the typical waste feed in waste incinerators are toxic compounds.

Incinerators are equally efficient on the full range of organic compounds. Incinerators will destroy pesticides, herbicides, plastic products, chemical manufacturing wastes, petroleum refining and petrochemical wastes, bottoms from distillation, pharmaceutical wastes, and product rejects, wastes from textile production and degreasing, sludges from paint manufacturing, waste solvents, and wastes from solvent recovery. Hospital wastes are also effectively destroyed by incineration. Incinerators of various types may be used on liquids, solids, and gases. Even wastes which contain small quantities of organics such as contaminated soils can be rendered non-hazardous.

The wide range of application for incineration is possible because of the various types of incinerators available today, and the degree to which combustion technology has been tested for application to industrial and hazardous wastes. Fume, liquid, injection, hearth, rotary kiln, and fluidized bed types of incinerator designs are well established incineration technologies.

Types of Incinerators

A wide variety of incinerator types have been developed to handle wastes. A selection of incinerator type for hazardous waste treatment is made by considering the amounts, types, and properties of the hazardous waste to be destroyed. Among these are physical form of the waste, whether the waste is a solid or liquid, sludge or solid, constituents, heating value of the waste, and chemical composition. The typical types of hazardous waste incinerators are:

- Fixed Hearth incinerators
- Multiple hearth incinerators
- Rotary kilns
- Fluidized bed incinerators

Fixed Hearth Incinerators

Fixed hearth incinerators are commonly used for incinerating solid and hazardous wastes. With some modification in design, liquid wastes can also be incinerated in this type of incinerators. This type of incinerators are relatively easy to operate, and are particularly suitable for small to medium capacity hazardous waste treatment facilities. Typical incinerators of this type are available in capacities ranging from 50 lbs/hr to 1000 lbs/hr. A fixed hearth incinerator is a two-chamber device, each chamber is refractory lined. The waste and supplemental fuel is introduced into the primary chamber through a side port or auto feed door. If the hazardous waste does not have sufficient heating value to sustain operating temperatures, supplemental heat is provided via a liquid injection hazardous waste or fuel burner. Fixed hearth incinerators may be of rectangular or cylindrical shape. Photos of typical fixed hearth incinerators are shown in Fig. 3-2

In the primary chamber, waste rests on the floor (hearth). There it is ignited and burned to ash. Air is supplied to the burning mass by force draft blower or natural convection, through other side ports. Generally primary combustion chambers operate in temperature ranging from 1600°F to 1800°F (870°C to 980°C). When combustion is complete, and the ash has cooled sufficiently, it is removed and disposed of. These incinerators can be operated as batch or continuous units. Typically batch run times are 4-5 hours depending on factors like type of waste, heating value, air flow and temperature. Depending on the operational requirements, the waste feed can be automatically introduced periodically in continuous operating incinerators, using a hydraulic ram type feeding device. Automatic ash removal mechanisms using hydraulic rams and/or screw conveyors are also available.

Because the solids, sludges and high viscosity liquids may not mix thoroughly with combustion air in a fixed hearth, a provision is made to enhance destruction of all organics by adjusting the rates of waste introduction, air flow, and ash removal. Organics, if not completely destroyed in the primary chamber, will pyrolyze (thermally decompose in the absence of oxygen) and/or volatilize (change from solid

or liquid to gas/vapor phase). Gases exiting the primary chamber flow into a second chamber, carrying the gaseous organic compounds. The second chamber is designed to ensure complete combustion and destruction of the gases containing the residual organics. Generally secondary chambers operate in temperature ranging from 1700°F to 2000°F (925°C to 1100°C). Auxiliary fuel and air are introduced into the secondary chamber to complete the combustion process. The residence time for combustion in the secondary chamber is usually less than 2 seconds, which is generally sufficient to destroy most of the gaseous organics. However, depending on the hazardous waste constituents, presence of some compounds may require residence time of 2 seconds. The gaseous emissions from the secondary chamber exit through the stack. For most cases, the secondary chamber is designed to function as the air pollution control system, at least for the volatile organics. Some particulates may escape past the secondary chamber. Experience has shown that operating and maintenance costs of fixed hearth incinerators are generally reasonable because of few internal moving parts. Appendix 4 provides a list of manufacturers and suppliers of incinerators.

Multiple Hearth Incinerators

A multiple hearth incinerator is capable of handling high volumes of wastes. Large commercially operating regional hazardous waste treatment facilities typically use multiple hearth incinerators. Operating capacities of such incinerators may be in excess of 10,000 to 20,000 lbs/hr. The incineration chamber is a vertical steel cylinder, lined with refractory. A number of horizontal platforms are located at various levels in the chamber. The top platform receives a continuous charge of waste fed by a mechanical arm (rabble arm or rake), and finally moved to a discharge opening through which the waste falls onto the next platform. There the process is repeated. Any number of platforms or hearths may be designed into the unit, depending on capacity and operating conditions. Generally, a minimum of six hearths are usually required for combustion of wastes in the presence of excess air. The bottom-most hearth is usually supplied with overfire air. The other hearths are underfired with hot gases from the hearths below and air. In advanced designs, the combustion air supply is often the fluid which passes through and cools the rabble arms and the shaft to which they are attached. The combustion air is thus preheated. Fig 3-3 shows a schematic of a multiple hearth incinerator.

A vertical shaft (main shaft) passes up through the center of the chamber and the hearths. This shaft, to which the horizontal rabble arms are attached, is mechanically rotated, causing the rabble arms to sweep across the hearths, plow over the wastes, and eventually move the waste to discharge ports. The metal shaft and rabble arms are air cooled.

The multiple hearth incinerator, because of its inherent features, has three operating zones. The upper most set of hearths will remove moisture/volatiles at moderate temperatures from top-loaded incoming waste; the middle set of hearths serves as an

incineration zone; the lower set of hearths achieves cooling of the ash, which is discharged from the chamber usually by means of a an auger.

If the waste feed does not contain the required heat content to sustain combustion or achieve a desired temperature, auxiliary fuel, such as diesel or light fuel oil, is fired into the chamber through side ports. The fuel may be oil, gas, or liquid waste of high heating value.

Multiple hearth incinerators may be designed as needed, and are generally available in various sizes from 6 to 25 feet in diameter, and approximately 12 to 75 feet high. Upper zone temperatures, depending on the heat content of the waste and supplemental fuel amounts, range from 650º F to 1000º F; mid zone temperatures range from 1500º F to 1800º F; and lower zone temperatures range from 600º F to 1100º F.

Multiple hearth incinerators are best suited to incinerate wastes with a high water content, and of a uniform fine size (sludge). Bulk solid hazardous wastes will not flow downward easily through the hearth openings, and could jam the rabble arms.

For incineration of hazardous wastes containing different types of toxic and complex organic compounds, multiple hearth incinerators often includes a secondary combustion chamber unit. The gaseous emissions from the upper zones of the multiple hearth incinerators carry volatile organics, and the operating temperature in this zone may not be high enough to fully combust and destroy the organics. The gases are combusted and destroyed in the secondary chamber. As in the fixed hearth incinerator, auxiliary fuel and air are introduced into the secondary chamber and combustion takes place for a predesigned residence time, to ensure complete combustion of the organics prior to emitting out of the final stack. Because of internal moving parts, maintenance cost of multiple heart incinerators is high, and requires skilled and trained operators. Due to high capital costs, multiple hearth incinerators are generally limited to large scale commercial hazardous waste operating facilities.

Rotary Kilns

Generally, the rotary kiln incinerator is considered the most versatile and most durable of the common incineration systems. It can incinerate almost any type of waste, regardless of size and composition. There are no internal moving parts, maintenance is moderate, and the temperature restrictions on operation are not severe. Fig 3-4 shows a schematic of a rotary kiln type incinerator.

A rotary kiln is a refractory lined cylindrical steel shell slightly tilted on the horizontal axis. The shell is usually supported on two or more heavy steel tracks (trundles) which band the shell. These ride on rollers allowing the kiln to rotate around its horizontal axis. Waste material is moved through the kiln by gravity as it rotates. The rate of rotation and horizontal angle of tilt determines the amount of time the waste is held in the kiln (solids residence time).

Rotary kilns can receive solid hazardous waste through one end which is non-rotating, by means of an auger screw or ram feeder. Pumpable, non-dispersible wastes, and sludges may be introduced through a water cooled tube (wand), and liquid wastes may be injected into the kiln through a burner nozzle. As with a liquid injection incinerator, auxiliary fuel can be fired into the kiln chamber. Combustion air (secondary air to the liquid waste, and primary air to the sludges and solids), can be introduced in a variety of ways to enhance turbulence in the kiln chamber. The rotating motion of the kiln tumbles the sludges and/or solids, and allows fresh surfaces to be continually exposed to combustion air.

Length to diameter ratios of rotary kilns is typically 2.5-5 to 1. A kiln diameter may range from 4 to 16 feet. He refractory lining of the steel shell of a large rotary kiln is covered with high temperature firebrick that is resistant to chemical attack and erosion.

Heavy duty designs of rotary kilns for hazardous waste incineration are available, which will allow operating temperatures as high as 2600ºF. However, alternative designs which are less costly, easier to operate, and more commonly used have operating temperatures below 1800ºF. Rotary kilns with the higher operating temperatures may not require a secondary combustion chamber for destroying the residual organics in the gaseous streams. The lower temperature units often use a secondary chamber for destruction of the organics. Kilns often have secondary combustion chambers, followed with air pollution control systems.

One of the operational advantages of rotary kilns is that bulky solid hazardous wastes, or fusible ash are not seriously detrimental to the operation of a rotary kiln. Hazardous waste in drums and packaged wastes can be introduced into the kiln for incineration. Sintered ash usually comes loose of the kiln wall in small fragments, and is discharged from the opposite end to the feed end of the kiln. One design concern for rotary kilns is air leakages around end seals. Because operation is typically under vacuum, air leakage occurs into the kiln combustion chamber. The amount of air leakage is to be considered in the design of the combustion air supply flow rate.

In the case of the Nasreya hazardous waste treatment facility, one of the options to consider is to ship the bulky solid hazardous wastes received to cement or lime kilns located offsite in and around the Alexandria area. This option will provide safe treatment of bulky hazardous waste, and offset the cost of fuel in the cement and lime kiln facilities. Cement manufacturing is one of the common industry sectors in the Alexandria area. This practice is fully acceptable and used in highly industrialized countries to address the treatment and disposal of large quantities of bulky hazardous solid wastes, and high heating value liquid wastes. It provides a cost-effective and environmentally acceptable hazardous waste management solution. In some cases, a supplemental secondary combustion unit and/or air pollution control system may be necessary to be retrofitted with the existing cement kiln. Technical and economic evaluation should be conducted to review the feasibility of this option.

Fluidized Bed Incinerators

Fluidized bed incinerators have long served the needs of the chemical industry as a unit operation. Its application is also available for hazardous waste incineration. It functions as a reactor vessel which provides intimate contact between gases and particulate solids in a fluidized condition.

The basic configuration of a fluidized bed incinerator is a column of fine particulates such as sand in the lower portion of a vertical cylindrical vessel. Air is passed upwards through the column of particles, thus contained, at a sufficient velocity to suspend the particles and cause the solids/air mixture to behave like a liquid (referred to as the fluidized bed condition). The fluidized particles circulate within the column and mingle with the upward flowing air. Intimate solid/air contacting is achieved. The bed is preheated by overfired or underfired auxiliary fuel. Solid hazardous wastes are introduced into the fluidized bed by gravity, conveyors, augers, or pneumatic air transport systems. Sludge or liquid waste is pumped in through a wand. The waste mixes with the bed material, achieves ignition temperature, and the oxygen in the air reacts with the organic constituents of the waste for combustion. Fluidized bed incinerators can use calcium as a constituent of the fluidizing material so that acid gas production is reduced. Fig. 3-5 shows the schematic of a fluidized bed incinerator.

Fluidized bed incineration chambers usually consist of vertically mounted steel shells lined with either brick or suitable refractories. The chamber typically ranges in size from 4 to 28 feet in diameter, depending on operating capacity. The fluidized bed depths range from 3 to 6 feet. Like multiple hearth incinerators, fluidized beds are also limited in maximum size of waste particles. This is an important design and operating criteria to allow the bed material to be lifted and kept in suspension by the fluidizing air.

The bed portion of the fluidized bed incinerator typically operates at temperatures between 1200ºF and 1700ºF. The upper portion of the incinerator, called the freeboard, is usually two to five times the volume of the bed, and may operate at slightly higher temperatures, up to 1800ºF because of combustion of volatile organics. Secondary combustion chambers are not commonly used in fluidized bed incinerators because the volume above the bed acts as an integral afterburner/secondary chamber, and also because fluidized beds have inherently longer gas residence times than other types of incinerators. A fuel-fired secondary combustion chamber unit may be used when higher temperatures are required to achieve destruction of additional selective compounds present in the hazardous waste such as PCBs.

Fluidized bed incinerators have few moving parts and there is minimal thermal shock to the refractory. So maintenance requirements may be lower than other types of incinerators such as multiple hearth incinerators. However, high pressure blowers are required to overcome the bed pressure drop.

Air Pollution Control

Air pollution control systems are often used with hazardous waste incinerators. The selection of the proper air pollution control device is dependent on a number of factors including:

- Properties of the wastes
- Type of incinerator
- Costs (capita and operating)
- Ash quantity/characteristics, other residues
- Incinerator operating characteristics
- Wastewater treatment considerations
- Particle size and particle size distribution

The principal air pollution control devices now in use on hazardous waste incinerators include packed towers, spray dryers, or dry scrubbers for gaseous pollutant control, and venture scrubbers, wet or dry electrostatic precipitators or fabric filters for particulate control. Fig. 3-6 shows a typical air pollution control system.

Packed towers are usually vertical columns which have been filled with packing which provides a large surface area. An absorbing liquid is distributed over, and trickles down through the packed bed, thus exposing a large liquid surface area available to contact the gas. The gas stream (containing gaseous pollutants such as HCl) moves upward through the packed bed countercurrent to the absorbing liquid. Although the liquid is usually water, other aqueous chemical solutions, such as caustic or lime slurry, may also be used. These enhance absorption by chemically reacting with the gaseous pollutants. For example, HCl scrubbed with caustic solution will convert the absorbed chlorine to sodium chloride.

Because of the difficulty in managing the buildup of chlorides necessitating dual wet scrubbing, and the burden of a liquid waste disposal problem, dry and semi-dry scrubbers are also used for flue gas cleaning systems. Dry scrubbing involves the injection of a solid powder such as lime or sodium bicarbonate into the flue gas. Acid gas removal occurs in the dust collector as sorbent, and ash particles and condensed volatile matter are captured. Semi-dry processes are often applied using spray dryers. Spray dryer absorbers are large cylindrical chambers into which a finely atomized absorbent, typically lime slurry, is sprayed into the gas stream containing acid gases. The acid gases react with atomized slurry droplets and form solid reaction products, such as calcium chloride. This treated gas stream is generally sent to a high efficiency particulate collector such as a fabric filter (bag house) or dry electrostatic precipitators. Particulate in the emission gas is usually collected by wet scrubbers, electrostatic precipitators, or fabric filters.

Ash Collection

The principal residue from the incineration process consists of incinerator bottom ash and fly ash removed from the flue gas by the air pollution control system. Both these ashes are disposed in the landfill.

Performance Testing and Monitoring

Hazardous waste incineration is a technology to treat hazardous waste and make it less hazardous. Performance of an incinerator therefore, relates to the degree of treatment provided. Performance also relates to protection of public health during the treatment process, since the ultimate reason for treatment of hazardous waste is to protect public health and the environment.

Measures of degree of treatment include:

- Reduction of the volume of hazardous waste.
- Efficiency of destruction and removal (DRE) of selected principal organic hazardous constituents (POHCs) in the waste.
- Efficiency of destruction of all other hazardous constituents in the waste.

Measures of residual emissions of hazardous compounds include:

- Emission rates of organic waste constituents in stack emission
- Emission rates of products of incomplete combustion (PICs).
- Hydrogen chloride (HCl) emissions
- Particulate emissions
- Hazardous metal emissions.
- Emission of hazardous compounds in ash and pollution control device effluents.

Since current knowledge does not, with complete assurance, allow prediction of performance based on the values of all design and operating parameters, it is necessary to test an incinerator to confirm its performance. This test is called a Trial Burn. The specific purpose of a Trial Burn is to demonstrate that a hazardous waste incinerator complies with the DRE specified in the regulations, particulate emission, and HCl emission requirements. The Trial Burn process provides a performance test under projected worst case operating conditions and (if successful) lead to an operating permit that specifies limits for the critical operating parameters. A Trial Burn Plan is prepared which specifies the test operating conditions, operating period, sampling, analysis and monitoring plan, Quality Assurance and Quality Control procedures. During the Trial Burn runs, influent and effluent streams are sampled and analyzed periodically per the Trial Burn Plan. The performance data is evaluated to determine conformance with the regulatory performance requirements.

4.0 CONCEPTUAL DESIGN OF A CENTRALIZED TREATMENT AND DISPOSAL FACILITY

4.1 Overview

This section provides conceptual design of a Hazardous Waste Treatment, Storage and Disposal Facility (TSDF) located in Nasreya, in the greater Alexandria region. An existing TSDF is in operation at the Nasreya Hazardous Waste Management Unit (HWMU) facility. This facility, constructed in 2004, is the first and only commercial hazardous waste treatment facility in Egypt. The facility is owned and operated by the Governorate of Alexandria. The Ministry of Environmental Affairs, Egypt provides regulatory oversight of the facility. The existing facility is primarily a landfill constructed to accept inorganic hazardous wastes for disposal. Limited resources are available for chemical stabilization of selected wastes prior to landfilling. This section describes details of how the existing TSDF facility can be expanded to include a comprehensive system of treatment and disposal for a wide variety of hazardous wastes. Implementation of the proposed system will significantly increase the much needed capability of the existing facility to accept different types of hazardous wastes for proper treatment and safe disposal. While the TSDF would primarily cater to the needs of the Alexandria area, the facility would also be able to accept hazardous wastes from other areas.

For purposes of evaluating the feasibility of hazardous waste treatment options for the proposed TSDF, and develop the design of the facility, a design criteria was prepared. Information used for developing the design criteria is based on the available data provided by the existing HWMU facility regarding the types and quantity of hazardous wastes currently generated in the Alexandria area (Table 2-1).

4.2 Design Criteria

Based on the available information on types of hazardous wastes, the waste streams are summarized in three categories: solid, liquids, and sludges. For purposes of establishing a design criteria for the proposed hazardous waste treatment TSDF, the waste streams are classified into three types as follows:

Solid Hazardous Waste: The data indicates approximately 1718 tons per year of solid hazardous waste. These wastes would be transported into the facility mostly in drums or in bulk.

Liquid Hazardous Waste: The data indicates 26,047 tons per year of liquid hazardous waste, with a large quantity being from the pharmaceutical and chemical industries, and the balance being wastewater containing oil and hydrocarbons, spent solvents, and waste oils. The data identifies a third category of hazardous wastes, in

the form of sludge. These wastes may be paint sludges, still bottoms and sludges from petroleum refineries, and dewatered sludge from metal plating wastewater treatment operations. Depending on the waste generating processes, the sludges may be generally considered a liquid waste due to its high liquid content.

Hazardous Sludge: Approximately 134 tons per year of hazardous sludge waste are generated.

4.3 Existing Hazardous Waste Treatment Facility

The existing hazardous waste treatment facility is located in Nasreya, a suburban town outside of Alexandria. Figure 4-1 shows the schematic layout of the facility. This is the first and currently the only hazardous waste treatment and disposal facility in Egypt. The facility consists of primarily a landfill designed to accept inorganic hazardous waste for disposal. The facility also has a chemical stabilization unit, which mostly performs pH neutralization of inorganic acidic and alkaline hazardous wastes and solidification using lime and pozzolonic additives prior to disposal in the landfill. An evaporation pond is available for collecting and dewatering leachate, and selected liquid wastes. A relatively small fixed hearth incinerator is currently under installation for treatment of organic hazardous wastes. In addition to treatment units, the facility has a guard house, administrative building, laboratory, and waste storage structures.

4.4 Conceptual Design of Hazardous Waste Treatment Facility

The objectives of the proposed conceptual design approach for hazardous waste treatment and management at the TSDF are as follows: 1) to make the TSDF design cost-effective to construct and operate to best meet the local hazardous waste treatment and disposal needs, 2) to construct the TSDF expeditiously with local resources, 3) to incorporate a modular design that allows the flexibility, and which can be expanded, as needed, in the future, and 4) to be available as a model for constructing similar TSDFs in other locations in Egypt.

The process flow diagram for the proposed TSDF is presented in Figure 4-2. To address the different types of hazardous wastes that are generated and transported to the facility, the management and treatment options are designed to meet the needs of three primary categories of wastes: 1) Solid hazardous waste, 2) Liquid hazardous waste, and 3) Special hazardous wastes. The waste management and treatment methods for each of these wastes at the TSDF are described as follows:

- **Solid hazardous waste** – It is envisioned that some of the hazardous waste coming to this facility are dry solid hazardous wastes, transported in drums or in bulk carriers. Examples of these wastes are process wastes from chemical and other industries, and petroleum refineries, expired chemicals, dewatered sludge from metal plating wastewater treatment containing cyanide and heavy metals, and soil and debris contaminated with hazardous constituents from cleanup of

spills. These wastes are proposed to be landfilled without further treatment. Drummed wastes would be consolidated and disposed in the landfill. The empty drums would be crushed on site and then disposed in the landfill. Through this method, there would be a reduction in volume of space required in the landfill, and improved handling and compaction of the wastes during landfill disposal.

- **Liquid hazardous waste** – Liquid wastes are anticipated to be a major source of hazardous wastes for treatment and disposal. Depending on the nature and type of hazardous constituents present, it is proposed to separately store selected liquid wastes for further treatment and disposal. Treatment, handling, and disposal of the different types of liquid wastes are as follows:

  1) Waste oils, oily wastewater, and spent solvents (combustible wastes) would be stored in one area in designated storage tanks. Most of these wastes are combustible. The oil-water separator will be used to treat the oily wastewater, and the decanted oil will be used as fuel for the incinerator. The separated water will be used in the chemical stabilization process. Spent solvents will be processed in a solvent recycling unit to recover the solvents. The recovered solvent will be stored for sale as recycled solvent. Waste solvent concentrate from this unit will be either incinerated or chemically stabilized for landfill disposal. Another option for the non-recoverable combustible liquid wastes is co-combustion as fuel in existing cement kilns off-site, for the disposal of these waste streams. This is a proven technology which can eliminate the need for an incinerator, and which utilizes the fuel value in these waste streams.

  2) Non-combustible type liquid hazardous wastes will be stored in a separate area. The wastes will be chemically treated with additives such as lime, cement kiln dust, or other agents for chemical stabilization, for toxicity reduction, pH neutralization, and to make the toxics less mobile and safe for disposal in the landfill. At this time, large-scale hazardous liquid wastewater treatment using chemical processes are not included at the TSDF.

- **Special Hazardous Wastes –** Several special hazardous wastes consists of wastes such as 1) waste lead-acid batteries, 2) fluorescent lamp bulbs, and 3) white goods. The waste lead-acid batteries like automotive batteries are recoverable/recyclable hazardous wastes. The lead plates and the battery container are recyclable items. The acid in the waste batteries would be drained out, the batteries washed and rinsed, and the empty batteries would be sold back to the market for recycling. The waste acid will be used in the chemical stabilization process unit. Currently, used batteries are recycled by entrepreneurs using unsafe practices which potentially expose employees to acids and exposure to lead in the batteries. The proposed procedure will ensure safe handling of the waste acids, recycle the batteries, and eliminate the potential exposure to the battery recycling operators.

Fluorescent lamps contain mercury and other toxic metals. A designated area has been identified in the facility for storage of these items. The bulbs would be crushed and disposed in the landfill. This practice would eliminate the potential exposure of recyclers to mercury and ensure safe disposal. Another type of special wastes like white goods (such as non-recoverable household appliances) often contains toxic contaminants which expose people because of unsafe recycling practices. These items would be safely handled and crushed before landfill disposal.

After the waste treatment is completed, the waste will be ultimately disposed in the on-site landfill. Design and operation of the landfill is described presented in Section 5 of this report. In the U.S.A., hazardous waste treatment and disposal has been practiced complying with regulatory requirements since the 1970s. Numerous hazardous waste treatment facilities are in operation. Equipment and services for these facilities are provided by many manufacturers of equipment for waste handling and treatment, health and safety, waste analytical services, and monitoring. Appendix 4 presents a partial list of U.S. suppliers of products and services for hazardous waste treatment and disposal. Appendix 5 includes guidelines document for hazardous waste storage, and handling at the industrial sites of waste generators, and for transport of the hazardous waste for treatment and disposal. Appendix 6 presents the regulatory guidelines and design and operating requirements for typical hazardous waste treatment and storage facilities in the U.S. A. with operations similar to the Nasreya facility.

5.0 WASTE DISPOSAL IN LANDFILL

5.1 Landfill Design and Construction

At the Nasreya treatment and disposal facility, a landfill exists with a capacity of approximately 40,000 tons of waste. As of mid 2009, approximately 12,000 tons of waste has been disposed in the landfill. The landfill was primarily designed to accept inorganic hazardous solid wastes. A schematic and cross-section of the existing landfill is shown in Fig. 4-1. There are plans to install appropriate treatment units at the facility such that organic hazardous waste may be treated and disposed in the landfill. This section describes considerations and recommendations for design, construction and operation of a typical hazardous waste landfill to accept a variety of hazardous wastes.

All waste landfills must be designed to minimize contamination of groundwater. To satisfy this design criteria, landfills are lined with composite liner(s) i.e., a synthetic liner over clay (or clayey material) or another synthetic liner. Theoretically, leakage through the landfill base is not avoidable. However, it can be reduced practically to zero. In general, leakage through a single composite liner is extremely low. However, for a sensitive aquifer a double composite liner may be used to monitor leakage though the first liner. It may be noted that while constructing the second liner extreme care is needed to avoid damage to the first bottom liner. Table 5-1 provides a comparison between a single liner and a double liner system.

Table 5-1

Comparison of Composite Single Liner with Composite Double Liner

Item	**Advantages/Disadvantages**
Single Composite Liner	- Easier to construct compared to double liner. - Leakage of leachate through the first liner cannot be collected. - It is possible to detect liner leakage using basin lysimeter**.**
Double Liner	- Chances of damage to the synthetic membrane of the first liner are extremely high. - Collection of leachate from first liner system is difficult, unless leakage through the second liner is relatively high. It is possible to detect leakage from the second liner using the leachate collection system in the first liner**.**

Fig. 5-1 shows typical cross-section of a single composite liner system; and Fig. 5-2 shows typical cross-section of a double composite liner with two collection systems.

Current leachate apportionment models show that for a liner slope range of 2-4%, leachate flow towards a collection pipe depends on the surface gradient of the leachate accumulated at the base of the liner. Leakage through a liner will increase if the leachate flow towards the collection line is slow. For sites with low precipitation, the liner slope should be 4%. In addition, the drainage blanket should have high permeability, not less than $1x10^{-2}$ cm/sec.

Both convection and diffusion influences leachate leakage through a liner. While liner slope and liner permeability influence convectional transport of soluble inorganic components of leachate, they are not very effective in impeding diffusional transport of organic chemicals. Liner thickness and separation distance between the liner base and ground water table plays the key role in protecting ground water contamination from organic chemicals. Since both the organic and inorganic contaminant load, even in pre-treated hazardous waste landfills, are expected to be high, thick low permeability liner and large separation distance of the ground water from the landfill base will decrease risk of groundwater contamination. The permeability of the separating medium has very little influence on diffusion. However permeability of the liner plays a major role in decreasing liner leakage through convectional transport. So, landfills where leachate is expected to have significant quantities of both organic and inorganic chemicals, both low permeability liner and high ground water separation distance is desirable.

5.2 Liner and Leachate Collection system

As indicated in Table- 5-1, both composite single liners and composite double liners have advantages and disadvantages. For low precipitation areas the liner slope should be 3-4% towards the leachate collection line. Fig- 5-3shows cross section and a plan of a leachate collection system with a single composite liner.

Leachate collection lines are installed in trenches (Fig. 5-4). The slope of the collection trench should be 2% towards the collection line. The leachate collection pipe should be strong enough to withstand the pressure due to the waste above it. The leachate lines are cleaned using clean out ports (Fig. 5-4). The leachate collection pipes must be cleaned after construction and annually there after.

If a leachate collection line from a landfill is drained using gravity flow directly into a leachate tank (Fig. 5-4 or an onsite pond, then the collection pipe must penetrate the side- liner. An anti-seep collar is used to ensure that the leachate does not seep through the hole. The soil around the collar should be hand compacted. Extreme care must be taken during construction of the berm or side liner around the leachate exit point. The advantages of gravity flow method are that the method is economical, and

costs of operation and maintenance are low. However, chances of leakage through the anti-seep collar are relatively high for composite lined sites.

The other option for leachate removal is using a side slope riser in each landfill cell. Side slope risers are usually used for landfills deeper than 20m and for composite lined sites. The advantages of side slope risers are, chance of leakage through the exit line is minimal and there is no need for header pipes. Leachate withdrawal in case of pump failure will affect only one cell. The disadvantages of side slope risers are they are costly to construct, leachate collection will stop in case of pump failure and collection point access is a costly undertaking (especially if the waste depth is high).

It is important to assess the treatability of the leachate in the targeted sewage treatment plant. A bench scale study to judge the capability of the targeted sewage treatment plant is recommended. It may become necessary to treat the leachate fully or partially in an on site treatment plant. The following comments regarding leachate treatment will help in choosing a correct strategy on the issue:

a. Biological process is most suitable for leachate with high organic content.
b. Physical/chemical process is most suitable for leachate with low organic content.
c. A combination of biological, and physical/chemical process may be used for leachate with both organic and inorganic contents.
d. Both granular and powdered activated carbon is found to be useful in removing organic compounds from leachate.
e. Reverse osmosis may be necessary to treat leachate, if high dissolved chlorides or similar salts are present..
f. Air stripping is useful for removing Volatile Organic Compounds (VOC).

5.3 Landfill Cover System

The purpose of final covers is to minimize infiltration of water into a landfill so that leachate generation is minimized. In general, multilayer cover is constructed for both infiltration reduction as well as long-term maintenance reduction. Alternative cover providing both the above functions are also used. In a conventional multilayer cover (Fig. 5-3), a 15-60cm grading layer, consisting of coarse-grained sandy material, is used when the waste is semi solid. For significantly unstable waste, a layer of geotextile should be used below the grading layer. The purpose of the grading layer is to provide a stable surface for constructing and maintaining integrity of the low permeability layer above it. The barrier layer is a low permeability layer used to reduce infiltration. In general, a composite layer is used for composite lined landfills. A drainage layer is constructed to provide drainage of water infiltration and to reduce slip failure of the layers above the barrier layer. This layer is not necessary for arid and semi arid regions (up to 50cm of annual rainfall). A 15 to 30cm topsoil layer is used to help grow vegetation. Vegetation reduces infiltration through evapo-transpiration and provides stability of the top soil as well. For arid regions where vegetation is sparse or hard to grow, a mat may be used to reduce erosion due to wind and high intensity rainfall.

In addition to the final cover, use of intermediate cover and daily cover will help minimize leachate generation. When one cell of a landfill reaches a predetermined intermediate grade, the next cell is opened, to reduce chances of slope failure of the cell face. If the first cell remains open for a relatively long time, allowing rain water to percolate, it will result in significant amount of leachate generation. By constructing a 30cm thick layer of coarse grained material, sloped outward, will help to divert rain water to outside of the landfill perimeter. This temporary layer is called intermediate cover. Rainwater percolation can further be minimized by planting vegetation on top of the intermediate cover. The intermediate cover must be removed before disposing water on top of the cell. A temporary daily cover may be used at the end of a working day. If used properly, daily covers help reduce contaminant concentration in leachate, fugitive contaminated dust and odor. Tarpaulin or heavy duty plastic sheets may be used for daily cover.

5.4 Liner Materials

Four types of liner materials are discussed in the following sections. For a composite liner, clay, Geosynthetic Clay (GCL), or Bentonite Ammended soil may be used below the geomembrane. Both material specification and construction quality control tests are discussed.

5.4.1 Clay Liners

Properly compacted clay with the right specification is best for landfill liners. However, the effect of various parameters on clay properties must be considered while selecting clay as the liner material. The primary purpose is to provide a low permeability ($1x10^{-7}$cm/sec or less) barrier layer. In general, clays which achieve a low permeability when compacted to 90-95% of proctor's density at wet of optimum moisture content should be chosen for liner construction. It may be noted that the chemical constituents of leachate may adversely affect the clay permeability. So, it is recommended that conductivity of the clay be assessed in a test, using the onsite leachate. In general, inorganic chemicals may change clay permeability but organic chemicals have virtually no effect on clay permeability, except for high concentration of some solvents. It may be noted that while advection is the primary mode of transport for inorganic chemicals, diffusion is the primary mode of transport for organic chemicals. So, low permeability clay liners will reduce leakage of inorganic constituents, but ineffective for long-term transport of organic chemicals through landfill base. As discussed before, the transport of organic chemicals is dictated by separation distance between landfill liner and the groundwater table.

Clay liner permeability increases due to desiccation cracks. So, it is essential to protect the clay liner from excessive drying after construction by spraying water, if necessary. In general, a soil with the following specification is found suitable for liner construction:

Liquid limit (LL) greater or equal to 30%
Plasticity Index (PI) greater than or equal to 15%
0.074mm and less fraction (P_{200}) greater than or equal to 50%
Clay fraction (2μ or finer) greater or equal to 25%

In reality it may be difficult to obtain clay meeting the above specifications. Field experience indicates that clay with the following properties may also be compacted to achieve low permeability:

LL between 25 to 30%
PI between 10 to 15%
P_{200} between 40 to 50%
Clay content 18 to 25%

Clay should be compacted with equipment such as the 'sheep foot roller' or other similar equipment. Clay clods should be reduced in size, and water added, if necessary during compaction (to achieve wet of moisture) water content. Undisturbed samples from the compacted liner must be collected at 30m grid point of each lift and tested for dry density and moisture content. Grain size analysis, LL and PI of the clay liner must be tested on 25% of the samples collected at 30m grid points. The lift thickness of uncompacted clay should be 20-25cm. Usually, four to six passes of a sheep's foot roller with foot contact pressure of 1378-2756 kpa is recommended. The foot contact pressure should be adjusted such the soil is not sheared on the third or fourth pass. The foot contact area should be between 32 to 92 cm^2.

5.4.2 Geosynthetic Clay Liner

Geosynthetic Clay Liners (GCL) are manufactured by sandwiching a uniform layer of dry bentonite between two geotextiles or attached to a synthetic membrane with an adhesive. Four types of GCLs are available: geotextile enclosed adhesive-bonded; geotextile-encased stitch-bonded; geotextile-cncased needle punched; and geomembrane-supported adhesive-bonded. Permeability of GCLs varies between $1x10^{-7}$cm/sec to $1x10^{-9}$cm/sec. The interface shear values of GCLs depend on the contact material and the type of geotextile used in the GCL.

Shear values are needed to design GCL installation on the sloped interior faces of landfills. Both stitch bonded and needle-punched GCLs are suitable for low normal stress (e.g., in landfill cover); however, only needle-punched GCLs are suitable for bottom liners. Risk of damage to GCL during geomembrane installation on top of it, is high. So, extreme care should be taken to protect GCL during construction.

5.4.3 Bentonite Ammended Soil (BAS)

Bentonite Amended Soil (BAS) may also be used in place of clay liners. Bentonite swells significantly when water is added to it. Well-graded sand with 10 to 15% or

less of .074 (P_{200}) fraction is mixed with 4% of powdered bentonite (note: pellets should not be used) to produce low permeability ($1x10^{-7}$cm/sec) BAS. The mixing may be done in turbine mixer or truck mounted concrete batch mixer to ensure thorough mixing of sand and bentonite. The amount of water to be added to obtain a low permeability mix is to be determined by trial and error. The permeability should be checked in the laboratory using mix obtained from the on site mixing process to be used in the field. Several trial runs must be made to obtain a proper mix. The percentage of bentonite needed to obtain a low permeability mix may vary between 3-15%, which depends on the sand, the bentonite and the permeating liquid. Permeability of BAS is sensitive to the permeating liquid. Hence a synthetic leachate or leachate from an existing landfill should be used to judge the permeability of a BAS mix. Although chances of leakage through a properly installed geomembrane over uniform low permeability layer of BAS is low, it is preferred that BAS is used for low permeability layer in the final cover than the bottom liner. However, where clay or GCL is not available to construct a low permeability layer BAS is a good alternative below a geomembrane liner.

5.4.4 Geomembrane

There are several polymers that are combined with different additives to form a thermoplastic widely known as geosynthetic membrane (or geomembrane). Although thousands of possible formulation can be developed, in practice only a few are used which are named after the major polymer. Of the several choices, currently various variations of Polyethylene (namely: LDPE, HDPE, MDPI, VLDPE and LLDPE) are used widely. Workability, compatibility with waste and mechanical properties of a geomembrane must be considered before choosing a product for liner.
Workability includes both ease of handling and seaming. Cost of installation depends on ease of handling. The advantages of thicker membranes (1.5mm and above) are tolerance to handling abuse and less likelihood of weakening due to seaming. The main disadvantage of thicker membranes is that additional equipment may be needed during installation. In addition to the above two issues, “blocking” or sticking together due to high and ease of seaming are also important considerations. In general geomembrane, which are more chemically resistant, are more difficult to seam.

The chemical compatibility of a geomembrane with waste and leachate must be assessed. Waste-membrane compatibility tests typically involve immersing a membrane coupon in a synthetic leachate or pouch encapsulation up to 120 days and testing for changes in several physical properties. Mechanical properties of a membrane must also be assessed for quality control purposes. In the absence of any adopted standardized tests, tests listed in Table 5-2 may be used. Permeability of geomembrane is extremely low. However, if not installed properly leakage through geomembrane occurs through seams and holes. Quality control of geomembrane installation is discussed later.

Table 5-2

Standard Test Used in the United States for Testing Physical Properties of Synthetic Membranes

Physical Properties	Standard Test Method
Tensile strength	ASTM D638
Tear Resistance	ASTM D1004
Puncture resistance	ASTM D4833
Low-temperature brittleness	ASTM D746 procedure B
Environmental stress crack resistance	ASTM D1693 condition C
Permeability	ASTM E96, D1434 & D814
Carbon black percent	ASTM D1603
Carbon black dispersion	ASTM D2663
Accelerated heat aging	ASTM D573, D1349
Density	ASTM D1505
Melt flow index	ASTM D1238

ASTM – American Society for Testing and Materials

5.5 Landfill Stability

Landfills may become unstable during construction, operation, and after closure. The following items may fail:

a. Landfill berms
b. Drainage layer and geomembrane on the side slope.
c. Landfill foundation.
d. Cell face.

In addition, to the above, a landfill may also fail due to activities in the vicinity of the landfill.

Landfills should not be sited in areas where there is 10% or more a probability of maximum horizontal acceleration (MHA) exceeding 0.1 g in 250 years. In addition to liquefaction of sand, earthquake induced ground vibration may compact loose granular soil leading to high total and/or differential settlement of the landfill base. The following issues need to be addressed while designing landfills located in seismic impact zones:

a. Design ground motion must be chosen properly.
b. The dynamic properties and shear strengths of waste fills, liner materials and subgrade materials are to be evaluated properly.
c. Stability of the landfill elements for the chosen ground motion must be checked.

The failure mode due to earthquake is usually sliding block type failure along the liner waste interface. The dynamic properties of interface of liner materials can be established using conventional laboratory tests. Differential settlement of subsoil will make a liner act like a beam resulting in cracks at the bottom of a liner. Densifying foundation soil using dynamic compaction, vibro compaction or compaction grouting will reduce chance of liquefaction of foundation soil. Geomembrane with high interface strength will provide protection against slip. Also, reduction of side slope grade helps in reducing slip failures. Increasing compaction of waste during operation will reduce slip failure of waste face. The perimeter berm should also be checked for seismic stability.

5.6 Landfill Construction Quality Control

Proper quality control is essential to ensure quality of construction. Failure of a landfill would contaminate groundwater, clean up of which is extremely costly and time consuming. Technical personnel with experience and knowledge must oversee construction. The technical person(s) overseeing a landfill project must be capable of advising the construction crew, performing necessary quality control tests (e.g. compaction tests, moisture content tests) and surveying. The quality control field personnel(s) must be under the direct supervision of qualified engineer(s). While the contractor may provide on site supervisor(s), it is recommended that the owner use a third party consultant to perform the quality control tests. A quality control overseer from the third party consultant should be present at all times during the construction to ensure work is done uniformly. Since 100% of the constructed structure cannot be tested, the quality control tests are done at discrete sampling points.

The following paragraph includes various tests and its frequencies. In the absence of a regulatory requirement, the recommended frequencies may be used. Proper field and laboratory equipment must be used to perform the tests.

5.6.1 ClayLiners

Both pre-construction and post construction quality control tests are needed for clay. Clay from the borrow source is to be tested to ensure the clay properties meet the specifications. Samples from 5 boring and 5 test pits (total of 10) from the first 2 hectare (ha) or less, and 2 test pits or 2 boring for each additional hectare are to be collected and tested for Attterberg limits and grains size distribution. Five samples per first 4 ha or less and one sample for each additional 2 ha or less should be tested for modified proctor density curve. Each proctor curve should be developed using a minimum of five points. After developing each modified proctor curve, one or two soil samples should be compacted to 90% to 95% maximum modified proctor density using 2-3% more than optimum moisture and tested for permeability. If the permeability of these samples are at least $1x10^{-7}$cm/sec then the clay from the borrow source may be used for the liner construction. While mining clay from the borrow source, care must taken to avoid excavating undesirable soil, which make the soil

unsuitable for liner construction. A significant change in soil color usually indicates a change in soil properties.

During the clay liner construction, proper attention should be given to see that the clay is well compacted (Note: see section 2.3.1). Water should be sprinkled on the clay liner to avoid desiccation cracks. In the absence of a specified testing frequency adopted by the owner or the regulatory agency the following guidance may be used:

The clay liner must be tested immediately after compaction for dry density and moisture content at 30m grid point in each layer. Grain size distribution, liquid limit, plasticity index, and permeability tests should be performed on 25% of the samples collected at 30m grid points. If permeability from an area is less than $1x10^{-7}$ cm/sec, then the entire area should be recompacted and retested. If permeability of the recompacted area is still more than the target value, then the entire area should be excavated out and the liner reconstructed using fresh clay from the borrow pit.

5.6.2 Geomembrane

Geomembrane liner is laid on a clay or geosynthetic clay liner as sub-base. The sub-base must not contain any particles greater than 1.25cm. Larger particles may cause protuberance in the membrane. The panel layout should be made in advance to avoid travel of heavy equipment on installed geomembrane. Only seaming equipment, seam testing equipment and necessary installers should be permitted during and after geomembrane installation. During panel layout attention must be given to allow 15-20cm overlap and to avoid panel seaming within 0.9m of leachate collection trench. Small depression in the sub-base may cause the seaming equipment to get caught leading to burnout of geomembrane. A small piece of geomembrane should be placed below the panel where seaming is done to help avoid burnout; the small piece is to be moved forward as seaming progresses. Laying of the panels should be avoided during high winds (24kmph or more). Seaming should be done within the ambient temperature range specified by the manufacturer. Due to the carbon black geomembrane absorbs heat very quickly. Wrinkles may develop, if seaming is done at different times of the day when the temperature difference is high.

Transportation of the membrane must be done carefully both from the factory to the site and within the site. Since geomembrane deteriorate due to ultraviolet rays the rolls should be covered and protected from sun both during storage and after installation. Geomembrane should be covered with at least 30cm of the drainage layer (usually sand) as soon as possible. The sand should be pushed from one side towards the center so that dozer does not travel on the geomembrane directly. The damage due to traffic can be severe, but are most likely to remain undetected. As a guideline to help construction scheduling, the time to cover an area of installed geomembrane with sand is 50-100% of the time spent on installation. Usually liners are constructed in phases to minimize exposure to elements. Liners built in subsequent phases need to be connected with the previous phase. Several quality control tests are to be done during membrane manufacturing. This test requirement must be resolved during the

bidding process. The following tests (with the test designation indicated in the parentheses) may be used in the absence of a standard tests followed by the manufacturer/regulatory agency:

Sheet thickness (ASTMD 751), melt index (ASTMD1238), percentage carbon black (ASTM D1603), puncture resistance (ASTM D4833), tear resistance (ASTM D1004), dimensional stability (ASTM D1204), density (ASTM D729), low temperature brittleness (ASTM D746), peel adhesion (ASTM D4437, and bonded seam strength (ASTM D4437).

The following tests are to be performed during installation:

1. Inspection of sub-base to ensure smoothness. Small depression, if any should be corrected.
2. Checking the layout plan for familiarity and marking on the rolls. Panels usually have fixed width but variable length; they may be marked at the factory or at the site.
3. Checking of roll overlap after panel placement. Seaming machine and type dictate overlap width.
4. Testing of all factory and field seams. Vacuum box test is suitable for thick (0.75mm and above) membrane whereas air lance testing is suitable for thin membrane. Dual hot wedge seam provides test of the entire seam length. 100% of seam bonding must be tested with either of the above mentioned tests. However, only destructive tests are available for checking seam strength. Seam strength must be tested on 60cm long sample for each machine at the beginning of a work shift. A portion of the test seam is field tested and another portion is tested at a laboratory. Peel adhesion or tensile strength are tested in the field. The test sample are tested in the laboratory for peel adhesion (ASTM D4437) and bonded seam length (ASTM D4437).
5. All damaged area must be repaired promptly and tested for proper seaming. There is no set standard or number of allowable repair. Experience suggests that on an average up to two repairs per 930m^2 of installed geomembrane is considered reasonable. A detailed log indicating repair location, cause of failure (e.g., bad seam), date and time of detection, and repair and re-testing must be recorded.

5.7 Landfill Operation

A simple well-organized plan must be developed for efficient use of landfill volume and creating a safe working environment. Hazardous waste handling must be done properly to avoid diseases developed due to long term exposure to chemicals. Health and safety issues must also be addressed. The following guidelines will help in developing a site-specific plan:

a. For best space use, compacting should be done in these lifts (1 to 1.5 m thick) for dry waste. Generally compaction is not needed for waste with more than 50% liquid.

b. End dumping from landfill side should be avoided. This practice increases risk of accident and leads to inefficient use of landfill volume.
c. The active area of the landfill should be as small as possible.
d. A stable working face should be maintained for ease of operation. Stable waste face slope depends on waste consistency. In general 4:1 slope is stable for waste up to 15% liquid. 6:1 to 8:1 slope is needed for waste containing 50% to 60% liquid.
e. Liquid waste must not be disposed in landfills. If possible (i.e. if there is no interaction) a liquid waste may be mixed with a powdery waste to reduce the liquid content of the resulting waste mass.
f. Waste contact liquid must not be allowed to run off from the landfill. Small containment berms are helpful in arresting offsite migration of liquid.
g. Proper equipment should be used for operating a landfill. Choice of equipment depends on the waste consistency. In general, compactors are needed for solid or semi-solid waste.
h. Landfill managers and operators should receive training regarding landfill design, construction operation, monitoring, health and safety, and long-term care of the landfill.
i. Landfill personnel should be trained in handling emergency. An annual drill dealing with various emergency situations (e.g. accidental spill, fire, and personnel injury) is recommended.
j. Emergency contact information should be readily available in the landfill office.

5.7.1 Phasing Plan

A phasing plan is important for operating a landfill efficiently. An ideal phasing plan is one in which each phase receives a final cover in the shortest possible time. Depending on the landfill depth, either a single stage (Fig. 5-5) or a multistage phasing plan (Fig. 5-6) should be chosen. A phasing plan must show the filling direction. Access road should not be constructed over final cover. Intermediate cover should be constructed in multistage landfills. Construction of an intermediate cover helps in reducing leachate production.

5.7.2 Landfill Odor

Gas from a hazardous waste landfill may pose health risk to landfill personnel. A chemist should be consulted to assess possibility of gas generation. Probable gas volume and whether the gas generation is short term or long germ must also be established to choose and install a proper gas collection system. If the landfill is expected to emit toxic gas, then collection and treatment of landfill gas is essential. In such situations temporary gas collection system (Fig. 5-7) may be used to collect gas from active landfills. Deep gas extraction wells (Fig. 5-8) are necessary for long-term permanent gas extraction systems. The gas extraction wells should be placed close enough for efficient gas extraction. However, since success of gas extraction system depends on the medium, in this case the waste mass, consistency of the waste will dictate the extraction system design. Final cover may crack if the landfill gas is

generated after a landfill is closed. The gas escaping through these cracks will pollute the environment and pose health risk for neighboring communities. So, it is important to assess gas generation issue properly.

5.7.3 Maintenance

In addition to issues related with daily operation of waste disposal, the following short term and long term maintenance issues are essential for proper landfill operation:

Access Road Maintenance: The interior and exterior roads must be maintained to provide uninterrupted access of waste transport vehicles. Landfill equipment without rubber tires (e.g. steel wheel compactors) should not be allowed on paved road; an unpaved road should be used for their movements in side and outside of the landfill property. A wide unpaved road, connecting the landfill to the maintenance shed, should be constructed for movement of such vehicles.

Leachate Collection System: All parts of the leachate collection system, namely the leachate collection pipes, manhole(s) if any, leachate collection tank and accessories, and pump(s) need attention. An annual inspection of these items is essential to ensure smooth landfill operation. Leachate lines should be cleaned immediately after construction and annually there after. If pump(s) is (are) used in a leachate collection system, then pump maintenance must be undertaken as per manufacturer's recommendations.

Berm and Cover System: The berms and final cover must be checked annually for erosion, loss of vegetation settlement, and structural failure. Prompt repair upon detection will help to avoid major repair.

5.8 Groundwater Monitoring

Ground water flow direction for the site must be established for monitoring groundwater. Generally several ground water monitoring wells (Fig. 5-9) are installed around a proposal site to find out the flow direction. For proper monitoring a minimum of one upgradient well, placed at least at a distance of 10-15m, and three to five down gradient wells should be installed. The horizontal distance and depth of the wells should be such that these wells are able to intercept the probable contaminant plume. Guessing the plume geometry is especially difficult for hazardous waste landfills. The contaminants which are lighter than water, do not get dissolved, are called Light Non-Aqueous Phase Liquid (LNAPL). Significant portion of a LNAPL plume remains in the groundwater capillary fringe. The contaminants that are immiscible and denser than water are called Dense Non-Aqueous Phase Liquid (DNAPL). DNAPL plumes go deeper into the aquifer. So, it is difficult if not impossible, to design a working ground water monitoring system without the knowledge of the leachate chemistry and aquifer characteristics. It is expected however, than all hazardous waste will be pretreated prior to land disposal. The

toxicity of the leachate is expected to be higher than that of from municipal and non-hazardous industrial waste leachate. So, attempt should be made to monitor leakage, through the base of the landfill, so that remedial action may be taken at a very early stage. Thus direct leakage monitoring using suction lysimeter or basin type lysimeter should be given priority. Several types of indirect leakage monitoring devices (e.g., neutron moisture meter, electrical probes) are also available. A soil gas probe may prove to be useful if Volatile Organic Compounds (VOC) are expected to be present in the leachate. In addition to installing proper monitoring devices, monitoring parameters (i.e. the pollutants for which samples are analyzed) and analysis of collected data are essential parts of a monitoring program. If an onsite leachate treatment pond is used then the pond must also be monitored for leakage. Statistical methods are employed to assess groundwater monitoring data. Box-plots have been found to be a useful tool in groundwater data analysis. Spread of box plot data for contaminated well is higher than the box plot data spread collected from a non-contaminated well.

Air monitoring should be undertaken to address air pollution in and around landfills. It will also help choosing respirator to be used by onsite personnel. Air monitoring parameters and devices to be utilized will depend on chemicals present in waste.

5.9 Waste Collection and Transportation

Proper collection and transportation of waste is integral part of hazardous waste management. Proper collection bins or tanks must be used to collect waste at the point of generation. Design of the hazardous waste collection bin or tank depends primarily on the liquid content and gas emission possibility of the waste. While designing the collection bins/tanks, the available transport vehicle and transport route must also be taken into consideration. The capability of the transport vehicle and the road (i.e. width, allowable weight on the road) on which the vehicle will be traveling will dictate the collection bin/tank size. The transport vehicle should be operated by experienced drivers aware of the danger posed by the waste in case of spill and knowledge of emergency contact procedure. It is a good idea to contact the spill coordinator (employed by the landfill owner or regulatory agency) at the time the vehicle starts from the collection point and after reaching the destination. The spill coordinator must be familiar with route on which vehicle is moving so that prompt action may be taken in case of a spill. Certain hazardous waste spill may require evacuation of the community who may be affected due to the release. The spill coordinator must be well trained in organizing proper cleaning procedure in case of a spill, vehicle accident, and fire. Necessary equipment and trained personnel should be on alert when the hazardous waste is in transit. The driver must carry a hazardous waste manifest and should be trained for proper entry and distribution of the form. At a minimum, the manifest form used during transport of hazardous waste, must contain the following information (note: at a minimum the form should be in triplicate - one kept by the originator of the hazardous waste, one kept by the transport vehicle owner, and one kept by the landfill owner):

1. Name, address, and contact information of the originator, description and commercial name of the waste, chemical composition, pick up date time, and weight/volume.
2. Transport vehicle license/registration number, and name of the driver (Note: The driver must sign the manifest at the time of pick-up).
3. Size and serial numbers (if any) of container(s).
4. Name, address, contact information for the disposal/treatment facility, and license (if any).
5. Space for signature of owner/operator of disposal facility indicating whether the entire consignment has been received, date and time of delivery.

5.10 Health and Safety

Hazardous waste management creates a number of health and safety concerns. Everyone involved in the handling of the waste (e.g., industry and landfill managers, transport vehicle drivers, landfill personnel) must be aware of possible health hazards from their job. Hazardous waste related health and safety issues go beyond the persons involved in handling the waste. It involves public health. If proper precaution and Personal Protective Equipment (PPE) are not used, then health and safety of all personnel handling the hazardous waste will be compromised.

5.10.1 Sources of Occupational Health Hazard

There are various sources of health hazard in operating a landfill. The following sections discuss each hazard and suggestion regarding minimizing health risk.

Noise

Excessive noise causes injury to the hearing ability of a person. Effect of sound depends on loudness, frequency, duration of exposure, age, and health of the person. While a short exposure to loud sound can cause temporary loss of hearing, a prolonged exposure to sound may cause permanent loss of hearing. All equipment should be equipped with noise reducing devices. Where necessary, proper personal protective equipment (PPE) must be given to an employee for hearing protection. PPE for hearing protection include pre-molded inserts (commonly known as reusable earplugs), formable ear plugs (made of waxed cotton or acoustical fibers), and custom-molded earplugs to fit a specific individual.

Confined Space Entry

A confined space is defined as a space large enough for human entry with restricted means of entry and exit. A confined space poses the potential for a hazardous condition due to existence of toxic fumes, lack of oxygen etc. The examples of confined spaces at landfills include manholes and leachate collection tank. Ventilating equipment should be used where necessary to ensure a safe environment. Portable self-contained breathing devices should be used where necessary. Spark-

proof tools, explosions proof fans, and lights should be used where necessary. At a minimum a team of two workers (one outside on ground, and one inside) is needed to work in a confined space. The worker inside a confined space should communicate with the person inside. Use of full body harness and lifeline is essential while entering a confined space to ensure rescue, if needed.

Dust and Air Contaminant Exposure

Dust, airborne contaminated waste particle and toxic gas exposure are possible in hazardous waste landfills. Steps should be taken to minimize air borne contaminant concentration. Based on the situation dust masks or respirators should be used. There are various types of respirators. Choice of which depends on the hazard. Individuals with breathing problems and lack of physical endurance should not be allowed to use a respirator on the job. Both air purifying (also known as air filtering) and air supplying type respirators are available. Air filtering respirators are used when the oxygen supply is sufficient and the toxic particulate and/or gas concentration is not above threshold. In oxygen deficient situations, either a Self-Contained Breathing Apparatus (SCBA) or a stationary air supply respirator is used.

Slips, Trips and Falls

These three are the major sources of injury in landfills. Slips occur due to lack of friction between the shoe and the surface. Trips usually occur in cluttered work areas, on a place with poor lighting. Falls occur whenever the body is off balance. It happens due to physical and or psychological condition, falls from trucks, unstable ladder and scaffoldings.

Thermal Stress

Landfill operators may be exposed to excessive heat. Heat exhaustion slows down the circulatory system, leading to reduction in blood flow. To avoid heat stress, work should be done in short intervals and fluid intake must be increased significantly. The operator's cabin in mobile equipment should be well ventilated or cooled if possible. The workshift(s) may be adjusted to avoid extremely high mid-day temperature.

Exposure to Harmful Chemicals

In hazardous waste landfills, chances of exposure to harmful chemicals are significant. All personnel handling hazardous waste should have a clear understanding of health effect of hazardous chemicals. Short-term exposure to certain chemicals can cause immediate effect while long-term exposure to certain other chemicals may have delayed health effect. In addition to actual landfilling operation, precaution must be taken while handling landfill leachate.

Contaminants may get air borne due to a fire. Fire risk increases with storage of flammable materials or chemicals. Electrical equipment can be a source of fire.

Landfill employees should be trained to response to fire. An annual fire drill will help avoid a fire catastrophic, which may cause environmental impact on an area several times bigger than the landfill.

Lifting

Improper lifting is the most common cause for back pain and injury. Although forklifts etc. are used to lift heavy objects, it is a common practice to lift moderate to heavy objects by hand. Employee should be trained in correct procedure to lift heavy objects (e.g., bending knees while lifting a heavy object).

Eye and Feet Protection

In addition to above occupational hazards, proper protection for eyes and feet must also be considered where necessary. Proper assessment of injuries to eyes and feet should be made to provide a safe working environment. Eye wash station within a landfill property may be set up to deal with emergency situations. Necessary safety boots should be provided to protect workers from unwanted cuts, puncture etc. Medical help should be sought immediately following an accidental cut however small. Since open wounds provide a direct pathway for contaminants, exposure to hazardous chemicals may cause severe health effect in the long run. It is a good idea to mandate use of working shoes gloves etc. while working in a hazardous waste landfill. A change room should be provided to ensure that employees do not leave the landfill with work clothes etc., which will stop spreading dangerous chemicals outside the landfill property.

5.10.2 Health and Safety Program

A Health and Safety Program (HSP) should be developed for the landfill site, taking into consideration the specific needs. HSP must address safety for each equipment and situation and overall safety of workers. Visitors must not be allowed in areas where their health and safety may be compromised.

Management must commit to provide a safe working environment. A well-organized HSP would address work site analysis, hazard prevention, employee training needs, emergency planning and implementation monitoring through proper record keeping of all accidents. Management must provide sufficient funding for developing and running a HSP. In addition to social and human aspect of employee welfare a safe working environment provide economic benefit through increase in productivity.

5.11 Landfill Economic Issues

Construction, operation, maintenance and monitoring of landfills require significant amount of money up front as well as in the long run. Apart from funds for daily operation of a landfill, sufficient funds must be set aside to perform for long term maintenance of landfill final cover and monitoring. While the expenditure for final

cover maintenance may reduce significantly few years after closure, the cost of monitoring is likely to increase due to inflation. Although present industry norm is to plan for 40 years of long term care after closure, but it may extend beyond 40 years in some cases.

5.11.1 Cost Estimates

There are four major items for which cost calculation need to be done: Construction, closure, long-term care, and operation. Cost of construction depends on the items of construction. Since the approach for cost estimation for construction is standard, in any civil engineering project, this item is not discussed in this report. A contingency of 10-25% is recommended for closure cost estimation. The major items for cost of final cover are construction, seeding and mulching of top soil (if necessary), and survey documentation. It is likely that a final cover is constructed in two or more phases depending on the phasing plan.

Major Long-Term Care (LTC) cost estimate items are included in Table 5-3 Cost of land surface care reduces significantly over the years. Ground water monitoring and leachate management cost continues for forty or more years after closure. It may be noted that leachate generation rate reduces significantly after construction of the final cover.

Table 5-3 Items for Estimating Long-Term Care Cost

Item	Basis of Cost
Land surface care	Erosion damage repair, reseeding, mulching
Leachate and lysimeter pipeline cleaning	Cleaning of pipeline using proper techniques
Groundwater monitoring (includes lysimeter sampling)	Sample collection, transportation, and laboratory and field testing
Gas monitoring	Sample collection, transportation, and laboratory and field testing
Leachate management	Hauling and treatment of leachate, leachate sump pump and tank maintenance
Annual assessment	Site inspection and report preparation
Administration and contingency	10-25% (or as appropriate) of total

Major operational cost items are listed in Table 5-4 In addition to actual operating cost, funds may be saved to build a second landfill after the current landfill is closed.

Table 5-4
Items of Estimating Annual Operating Costs

Item	Basis of Cost
Waste	Manpower, equipment necessary for compaction of waste
Intermediate cover	Hauling, placement, and compaction of soil
Groundwater, leachate, and gas monitoring	Sample collection, transportation, and laboratory and field testing
Leachate management	Hauling and treatment of leachate, leachate sump pump, and tank maintenance
Equipment	Purchase and maintenance

6.0 PRELIMINARY ENVIRONMENTAL IMPACT ANALYSIS

Prior to selecting the site for the Nasreya hazardous waste treatment and disposal facility, an environmental impact assessment (EIA) was conducted by the Egyptian Environmental Affairs Agency (EEAA). The site was selected based on the fact that the EIA determined that locating the hazardous waste treatment and disposal facility at the Nasreya site was acceptable, with no potential adverse impacts on the environment. It was also decided that a buffer zone of approximately 3 km would be maintained around the Nasreya facility. No new construction of buildings or other activities would be permitted to be located within this buffer zone. The only structure that existed in this area was a small elementary school for the local boys and girls. The school is located approximately 1.5 km (0.9 mile) northeast of the facility. Other than the school, the area within the buffer zone and the adjoining surrounding area is barren land, with no land use activities. The area within 5 km (3 miles) of the facility is predominantly barren and with desert-like characteristics. There are no water bodies such as streams or lakes within 5 km (3 miles) of the facility. The prevailing wind direction at the facility is in the south direction. There is no community development in the surrounding area of the facility.

While locating the treatment units within the Nasreya facility, attention was given to ensure that no adverse environmental impact occurs from the facility. All wastes treated in the treatment units are stored and handled within the boundary of the facility. No emissions via the air or water route are generated from the facility. Recently, a small incinerator unit was located at the Nasreya facility. The incinerator is equipped with a two-stage combustion system including an afterburner to destroy potential contaminants of concern to control the emissions. With the incinerator having a relatively small throughput capacity (approximately 50 kg/hr), and operating one or two batches per day, major concerns regarding emissions are not anticipated. The stack height is approximately 6 meters from the ground, which complies with the regulatory requirement of at least 3 meters above the building structure.

A preliminary environmental impact analysis was conducted in selecting the location of this incinerator within the facility. The incinerator is located at the farthest southeastern corner of the facility near the fence line. Locating the incinerator in this position ensures that any emissions from the incinerator exit the facility to the south, which is the downwind direction. Since there are no known receptors in this direction, within at least for 5 km from the facility, this condition ensures that there is no potential adverse impact on any receptors in and around the facility. The existing school is located in the upwind direction from the facility. Therefore there is no impact on the school from potential emissions from the facility.

Based on the EIA conducted by the EEAA at the initial stage of constructing the hazardous waste treatment facility at Nasreya, and the subsequent preliminary environmental impact analysis during the feasibility study, there does not appear to be adverse environmental or social impact from locating and operating this facility. In

fact, with the growth of this new facility, there is a potential for positive impact in the area in future from job opportunities, and economic growth of service providers to support the operation of the Nasreya facility.

LAW NUMBER 4 of 1994*

PROMULGATING

THE ENVIRONMENT LAW

and its

EXECUTIVE REGULATION

EGYPT

* In case of difference of interpretation, the Arabic text will prevail

LAW NUMBER 4 of 1994

PROMULGATING

THE ENVIRONMENT LAW

PRESIDENTIAL DECREE

EGYPT

LAW NUMBER 4 OF 1994
PROMULGATING THE ENVIRONMENT LAW

In the name of the People
The President of the Republic
The People's Assembly has ratified the following law which we have sanctioned and promulgated :

ARTICLE (1)

WITHOUT PREJUDICE TO THE RULES AND PROVISIONS SET FORTH IN SPECIAL LAWS, THE PROVISIONS OF THE ATTACHED LAW SHALL APPLY IN RESPECT OF THE ENVIRONMENT.

ESTABLISHMENTS EXISTING AT THE TIME OF THE ENACTMENT OF THIS LAW ARE HELD TO ADJUST THEIR STATUS IN LINE WITH ITS PROVISIONS WITHIN THREE YEARS FROM THE DATE OF PUBLICATION OF ITS EXECUTIVE REGULATIONS, WITHOUT PREJUDICE TO THE APPLICATION OF THE PROVISIONS OF LAW 48/1982 CONCERNING THE PROTECTION OF THE RIVER NILE AND WATERWAYS FROM POLLUTION.

THE CABINET MAY, ON THE BASIS OF A PROPOSAL BY THE MINISTER IN CHARGE OF ENVIRONMENTAL AFFAIRS, EXTEND THIS GRACE PERIOD FOR NO MORE THAN TWO YEARS, IF NECESSARY AND IF THE CABINET IS SATISFIED THAT SERIOUS PROCEDURES HAVE BEEN TAKEN TO PUT PROVISIONS OF THE ATTACHED LAW INTO FORCE .

ARTICLE (2)

THE PRIME MINISTER SHALL, ON THE BASIS OF A PROPOSAL BY THE MINISTER IN CHARGE OF ENVIRONMENTAL AFFAIRS AFTER CONSULTING THE BOARD OF DIRECTORS OF THE ENVIRONMENTAL AFFAIRS AGENCY[1],ISSUE THE EXECUTIVE REGULATIONS OF THE ATTACHED LAW WITHIN SIX MONTHS FROM THE DATE ON WHICH IT COMES INTO FORCE.

THE MINISTERS SHALL, EACH IN HIS RESPECTIVE AREA OF COMPETENCE, ISSUE THE RATES AND PERCENTAGES REQUIRED TO IMPLEMENT THE PROVISIONS OF PART II OF THE ATTACHED LAW, WITHOUT PREJUDICE TO THE PROVISIONS OF ARTICLE (5), WITHIN THE PERIOD MENTIONED IN THE PREVIOUS PARAGRAPH.

([1]) SHALL BE ABBREVIATED AS EEAA.

ARTICLE (3)

LAW 72 OF 1968 CONCERNING THE PREVENTION OF POLLUTION OF SEA WATER BY OIL IS HEREBY REPEALED, AS ARE ALL OTHER PROVISIONS RUNNING COUNTER TO THE PROVISIONS OF THE ATTACHED LAW.

ARTICLE (4)

THIS LAW SHALL BE PUBLISHED IN THE OFFICIAL GAZETTE AND SHALL COME INTO FORCE ON THE DAY FOLLOWING THE DATE OF ITS PUBLICATION.

- THIS LAW SHALL BE STAMPED WITH THE SEAL OF STATE AND ENFORCED AS A LAW OF THE STATE.

- ISSUED AT THE PRESIDENCY OF THE REPUBLIC ON 15 SHAABAN HEJIRA YEAR 1414 (CORRESPONDING TO 27 JANUARY, 1994).

Signed by
"HOSNY MOBARAK"

LAW NUMBER 4 of 1994

PROMULGATING

THE ENVIRONMENT LAW

EGYPT

Table of Contents

PRELIMINARY PART

CHAPTER ONE:	General Provisions (ARTICLE1)	**3**
CHAPTER TWO:	Environmental Affairs Agency (ARTICLES 2 to 13)	**9**
CHAPTER THREE:	Environmental Protection Fund (ARTICLES 14 to 16) ..	**14**
CHAPTER FOUR:	Incentives (ARTICLES 17to 18)	**15**
PART ONE:	**PROTECTION OF LAND ENVIRONMENT FROM POLLUTION**	
CHAPTER ONE:	Development and Environment (ARTICLES 19 to 28) .	**15**
CHAPTER TWO:	Hazardous Material and Waste (ARTICLES 29 to 33) ..	**18**
PART TWO:	**PROTECTION OF AIR ENVIRONMENT FROM POLLUTION** (ARTICLES 34 to 47)	**19**
PART THREE:	**PROTECTION OF WATER ENVIRONMENT FROM POLLUTION**	
CHAPTER ONE:	POLLUTION FROM SHIPS (ARTICLES 48 to 68)	**22**
SECTION ONE:	Oil Pollution (ARTICLES 48 to 59).....	**22**
SECTION TWO:	Pollution By Harmful Substances (ARTICLES 60 to 65)	**26**
SECTION THREE:	Pollution from Sewage and Garbage (ARTICLES 66 to 68)	**27**
CHAPTER TWO:	POLLUTION FROM LAND BASED SOURCES (ARTICLES 69 to 75).....	**28**
CHAPTER THREE:	INTERNATIONAL CERTIFICATES (ARTICLES 76 to 77).....	**29**
CHAPTER FOUR:	ADMINISTRATIVE AND JUDICIAL PROCEDURES (ARTICLES 78 to 83).....	**30**
PART FOUR: PENALTIES	(ARTICLES 84 to 101).....	**32**
FINAL PROVISIONS	(ARTICLES 102 to 104)	**37**

PRELIMINARY PART

CHAPTER ONE

GENERAL PROVISIONS

Article 1:

In the application of the provisions of this Law, the following words and expressions shall have the meanings hereby assigned to them:

1. Environment:

The biosphere which encompasses living organisms together with the substances it contains and the air, water and soil that surround it, as well as the establishments set up by man.

2. Air:

The mixture of gases constituting air in its known percentages and natural properties, and in the provisions of this Law, it is the ambient air, air within the work places, and air in closed or semi-closed public places.

3. The Convention:

The International Convention for the Prevention of Marine Pollution from Ships (1973-1978), and international conventions, to which the Arab Republic of Egypt adheres, in the area of the protection of the marine environment from pollution and compensation for pollution accidents.

4. Public Place:

A place equipped to receive people or a specific category of people for any purpose.

5. Closed Public Place:

A public place which is in the form of an integrated building that receives no incoming air except from designated inlets. Vehicles for public transport are considered closed public places.

6. Semi-closed Public Place:

A public place which is in the form of a non-integrated building with direct access to the ambient air and which cannot be completely closed.

7. Environmental Pollution:

Any change in environmental properties which may result directly or indirectly in harming living organisms or establishments or in affecting the ability of people to lead a normal life.

8. Environmental Degradation:

Effect on the environment that reduces its value, or changes its nature, depletes its resources or harms living organisms or monuments.

9. Environmental Protection:

Protecting and promoting the components of the environment and preventing or reducing their degradation or pollution. These components encompass air, seas, internal waters, including the river Nile, lakes and subterranean water, land, natural protectorates, and other natural resources.

10. Air Pollution:

Any change in the properties or specifications of the natural air which causes hazards to human health or to the environment, whether resulting from natural factors or human activities, including noise.

11. Rapid Transport Vehicles:

Motor cars, tractors, motorcycles and other machines designed for use on public roads.

12. Water Pollution:

The introduction of any substance or energy into the water environment, whether intentionally or unintentionally, directly or indirectly, which causes damage to living or non-living resources, poses a threat to human health or hinders water activities, fishing and tourist activities or impairs the quality of sea water so as to render it unfit for use, diminish the enjoyment thereof or alter its properties.

13. Polluting Substances and Factors:

Any solid, liquid or gaseous substances, noise, radiation, heat, or vibrations arising from acts of man that lead directly or indirectly to environmental pollution or degradation.

14. Water Polluting Substances:

Any substance whose discharge into the water environment, intentionally or unintentionally, leads to a change in its properties, or contributes to such change directly or indirectly to an extent that can harm man, natural resources, sea water or marine tourist areas, or which interferes with other legitimate uses of the sea. These substances include:

A- Oil or oily mixtures.

B- Harmful and dangerous wastes as determined in the international conventions to which the Arab Republic of Egypt adheres.

C- Any other substance (solid, liquid or gaseous) as determined in the executive regulations of this law.

D- Untreated industrial waste or effluents from industrial establishments.

E- Toxic military containers.

F- Substances listed in the Convention and its annexes.

15. Oil:

Crude oil and its products in all forms, including any kind of liquid hydrocarbons, lubricating oil, fuel oil, refined oil, furnace oil, tar and other petroleum derivatives or waste.

16. Oily Mixtures:

Any mixture containing oil in a ratio of more than 15: 1,000,000.

17. Unclean Balancing Water (Unclean Ballast Water):

Water in ship-borne tanks if its oil content is greater than 15:1,000,000.

18. Hazardous Substances:

Substances having dangerous properties which are hazardous to human health, or which adversely affect the environment, such as contagious, toxic, explosive or flammable substances or those with ionizing radiation.

19. Hazardous Waste:

Waste of activities and processes or its ashes which retain the properties of hazardous substances and have no subsequent original or alternative uses, like clinical waste from medical treatments or the waste resulting

from the manufacture of any pharmaceutical products, drugs, organic solvents, printing fluid, dyes and painting materials.

20. Substance Handling:

Anything that leads to the displacement of substances for the purpose of assembling, transporting, storing, treating, or using them.

21. Waste Management:

Collecting, transporting, recycling and disposing of waste.

22. Waste Disposal:

Processes which do not extract or recycle waste such as composting, deep subterranean injection, discharge to surface water, biological treatment, physio-chemical treatment, permanent storage or incineration.

23. Waste Recycling:

Processes which allow the extraction or recycling of waste, such as using it as fuel, or extracting metals and organic materials or soil treatment or oil re-refining.

24. Liquid Substances Harmful to the Water Environment:

The substances listed in the International Convention of 1973/1978.

25. Reception Facilities:

Installations, equipment and basins designed to receive, filter, treat and dispose of contaminated substances or ballast water, as well as installations provided by companies working in the field of shipping and unloading petroleum products; or other administrative agencies supervising ports and waterways.

26. Discharge:

Any leakage, efflusion, emission, draining or disposal of any kind of pollutants into the waters of the territorial sea, the exclusive economic zone, the sea, the river Nile and the waterways, taking into consideration the levels determined for certain substances in the executive regulations.

27. Dumping:

A- Any deliberate disposal of polluting substances or waste from ships, planes, platforms or other industrial establishments and land-based sources into the territorial sea, the exclusive economic zone or the sea.

B- Any deliberate dumping by ships or industrial or other establishments into the territorial sea, the exclusive economic zone or the sea.

28. Compensation:

Means compensation for the damage resulting from pollution accidents in accordance with the application of the provisions of the Civil Code and the provisions of the International Convention on Civil Liability to which the Arab Republic of Egypt adheres or to which it will adhere in future, including the International Convention on Civil Liability for Damage Caused by Oil Pollution Accidents signed in Brussels in 1969, or any other pollution accidents mentioned in the executive regulations of this Law.

29. Means of Oil Transport:

Every pipeline used in transporting oil and any other equipment used in loading, unloading or transporting oil, as well as pumps or other equipment required for the use of these pipes.

30. Ship:

Any floating marine vessel of any type, vessels which move over hydrofoil cushions or underwater establishments. Also, any fixed or mobile establishment constructed along the coasts or on surface water for the purpose of conducting commercial, industrial, touristic or scientific activities.

31. War Ship:

Any ship that belongs to the armed forces of a state, carrying its distinct external insignia, under the command of an officer officially appointed by the government of such state and operated by a crew governed by the rules of military discipline of that state.

32. Government Ship:

A ship owned by the state and operated or used for governmental and non-commercial purposes.

33. Harmful Materials Carrier:

A ship constructed originally or redesigned for the purpose of carrying cargoes of harmful liquid substances in bulk, including oil tankers when fully or partially loaded with harmful liquid substances not packed in accordance with the provisions stated in Chapter One, Part Three of this Law.

34. Establishment:

Establishment means the following:

- Industrial establishments subject to the provisions of Law No. 21 of 1958 and Law No. 55 of 1977.

- Tourist establishments subject to the provisions of Law No. 1 of 1973 and Law No. 1 of 1992.

- Establishments used for electrical power generation and production which are under the provisions of laws Nos. 145/1948, 63/1974, 12/1976, 13/1976, 27/1976, and 103/1986.

- Mines, quarries and establishments operating in the field of oil exploration, drilling, transportation and usage which are subject to the provisions of laws Nos. 66/1953, 86/1956, 61/1958 and 4/1988.

- All infrastructure projects.

- Any other establishment, activity or project which may have a noticeable impact on the environment . These shall be determined by a decision issued by the Environmental Affairs Agency in agreement with the competent administrative authority.

35. Environmental Monitoring Networks:

Agencies which undertake, within their spheres of competence and through their stations and work units, to monitor the components and pollutants of the environment and relay their results and data to the competent authorities periodically.

36. Environmental Impact Assessment:

Studying and analyzing the environmental feasibility of proposed projects, whose construction or activities might affect the safety of the environment in order to protect it.

37. Environmental Disaster:

An accident resulting from natural factors or human action which causes severe damage to the environment and requires resources beyond the local means.

38. **The competent Administrative Agency Concerned with the Protection of the Water Environment:**

Any of the following agencies, each within its field of competence:

A- The Environmental Affairs Agency (EEAA)
B- The Department of Ports and Lighthouses.
C- The Suez Canal Authority.
D- Port Authorities in ARE.
E- The General Egyptian Organization for the Protection of the Coast.
F- Egyptian General Petroleum Corporation. (EGPC).
G- General Department of Surface Water Police.
H- Tourism Development Authority.
I- Other agencies designated by a Prime Ministerial Decree.

CHAPTER TWO

THE ENVIRONMENTAL AFFAIRS AGENCY

Article 2:

An agency for the protection and promotion of the environment shall be established within the the cabiner premier ship under the name the "Environmental Affairs Agency". The Agency shall have a public juridical personality and shall be affiliated to the competent Minister for Environmental Affairs. It shall have an independent budget and its head office shall be located in Cairo. The Minister for Environmental Affairs may establish branches for the Agency in the governorates by ministerial decree, priority to be given to industrial areas.

Article 3:

The chairman of the Agency shall be appointed on the basis of the nomination of the Minister for Environmental Affairs and the proposal of the Prime Minister. His appointment shall be effected by a presidential decree which shall include his financial remuneration

Article 4:

The Environmental Affairs Agency shall replace the agency established by Presidential Decree 631 of 1982 in all its rights and obligations, and the employees of the said agency shall be transferred with their grades and seniority to the Environmental Affairs Agency.

Article 5:

The Agency shall formulate the general policy and lay down the necessary plans for the protection and promotion of the environment and follow up the implementation of such plans in coordination with the competent administrative authorities. The Agency shall have the authority to implement some pilot projects.

The Agency shall be the national authority responsible for strengthening environmental relations between the ARE and other countries and regional and international organizations. The Agency shall recommend taking the necessary legal procedures to adhere to regional and international conventions related to the environment and prepare the necessary draft laws and decrees required for the implementation of such conventions.

For the fulfillment of its objects, the Agency may:

- Prepare draft laws and decrees related to the fulfillment of its objects and express its opinion on proposed legislation related to the protection of the environment.

- Prepare studies on the state of the environment, formulate the national plan with the projects included for the protection of the environment, prepare the estimated budgets for each as well as environmental maps of urban areas and areas to be developed and lay down the criteria to be observed when planning and developing new areas as well as the criteria targeted for old areas.

- Lay down the criteria and conditions which owners of projects and establishments must observe before the start of construction and during the operation of these projects.

- Draw up a comprehensive list of national institutions and organizations as well as of qualified individuals who could contribute in the preparation and execution of environmental protection programmes and could be made use of in preparing and implementing the projects and studies undertaken by the Agency.

- Conduct field follow-up of compliance with the criteria and conditions that are binding to agencies and establishments and take the procedures prescribed by law against those who violate such criteria and conditions.

- Lay down and follow up the rates and percentages necessary to ensure that permissible levels of pollutants are not exceeded.

- Gather national and international information on the environmental situation and the changes affecting it on a periodical basis in cooperation with the information centres of other agencies, publish such information and evaluate and utilize it in environmental management and planning.

- Lay down the principles and procedures for assessing the environmental effects of projects.

- Prepare an environmental contingency plan in the manner stated in article 25 of this Law and coordinate with the competent bodies in the preparation of programmes to face environmental disasters.

- Lay down a plan for environmental training and supervise its implementation.

- Participate in the preparation and implementation of the national programme for environmental monitoring and make use of the data provided thereby.

- Compile and publish periodic reports on the main environmental indicators.

- Prepare programmes for the environmental education of the public and assist in their implementation.

- Coordinate with other competent authorities in connection with regulating and setting safety standards for the conveyance of hazardous materials.

- Administer and supervise natural protectorates.

- Prepare the draft budgets required for the protection and promotion of the environment.

- Follow up the implementation of international and regional conventions related to the environment.

- Propose economic mechanisms to encourage different activities and procedures for the prevention of pollution.

- Implement pilot projects for the preservation of natural resources and the protection of the environment from pollution.

- Coordinate with the Ministry for International Cooperation to ensure that projects funded by donor organizations and countries are in line with environmental safety considerations.

- Participate in laying down a plan to protect the country from leakages of hazardous substances and waste causing environmental pollution.

- Participate in the preparation of an integrated national plan for the administration of coastal areas abutting on the Mediterranean Sea and the Red Sea in coordination with the authorities and ministries concerned.

- Participate with the Ministry of Education in the preparation of training programmes for the protection of the environment within the scope of the various curricula in the basic education stage.

- Prepare an annual report on the environmental situation to be submitted to the President of the Republic and the Cabinet, a copy of which shall be deposited at the People's Assembly.

Article 6:

The Board of Directors of the Agency shall be chaired by the Minister in charge of Environmental Affairs and composed of the following members:

- The CEO of the Agency, who shall be the deputy chairman of the Board.

- A representative from each of six ministries selected by the Prime Minister from the ministries concerned with the environment, provided the representative of each ministry shall be a high-ranking official selected by the competent minister.

- Two experts in the field of environmental affairs selected by the Minister in charge of Environmental Affairs.

- Three representatives from non-governmental organizations concerned with the environment selected in agreement with the Minister in charge of Environmental Affairs.

- A high-ranking employee of the Environmental Affairs Agency selected by the Minister in charge of Environmental Affairs on the basis of a proposal by the CEO of the Agency.

- The head of the Legal Opinions Department at the Council of State.

- Three representatives from the public business sector selected by the Minister in charge of Environmental Affairs.

- Two representatives from universities and scientific research centres selected by the Minister in charge of Environmental Affairs.

Representatives of the ministries concerned shall be invited whenever subjects related to the sectors under their supervision are discussed by the Board. The Board may solicit the assistance of experts having no counted vote in the deliberations when considering specific issues. The Board of Directors may form advisory committees of experts to study certain subjects and may entrust one or more of its members with a specific task.

Article 7:

The Agency's Board of Directors is the supreme authority governing its affairs, running its business and drawing up the general policy it will follow. The Board may adopt whatever resolutions it deems necessary to fulfill the objects for which the Agency was established, within the framework of the national plan and in accordance with the executive regulations of this Law.

Article 8:

The Board of Directors shall meet at the invitation of its Chairman at least once every three months or at the request of half of its members. Board Meetings shall be valid if attended by half the number of its members. Resolutions shall be taken by a majority of the voting members attending the meeting. In case of a tie, the Chairman shall have the casting vote.

Article 9:

If the Chairman of the Board is absent or cannot attend the meeting he shall be replaced by the deputy Chairman.

Article 10:

The Chairman of the Board shall represent the Agency in its relation with third parties and before the courts.

Article 11:

The CEO of the Agency shall be responsible for the implementation of the general policy adopted to fulfill its objects and for implementing the resolutions of the Board of Directors. The executive regulations of this Law shall determine his other powers.

Article 12:

The Agency shall have a Secretary-General appointed from high-ranking Agency employees by a decree of the Minister in charge of Environmental Affairs after consulting the CEO, he shall assist the CEO and work under his supervision.

Article 13:

The CEO of the Agency shall have the ministerial powers prescribed in laws and regulations over Agency employees, with regard to whom , the Secretary-General shall have the authority of the head of the sector

CHAPTER THREE

ENVIRONMENT PROTECTION FUND

Article 14:

A special fund shall be established in the Agency under the name "the Environment Protection Fund" to which shall devolve:

a. Amounts allocated in the state budget to subsidize the fund.

b. Grants and donations presented by national and foreign organizations and accepted by the Board of Directors of the Agency for the purpose of protecting and promoting the environment.

c. Fines levied and damages awarded or agreed upon for any harm caused to the environment.

d. The financial resources of the protectorates fund provided for in Law 102 of 1983.

Amounts collected on a temporary basis on account of fines and damages for harm caused to the environment shall be deposited in the fund and held in trust.

The fund shall have a special balance sheet and its fiscal year shall commence and end with that of the state. Any surplus shall be carried over to the following year. The money in this fund shall be deemed public money.

Article 15:

The resources of the fund shall be allocated to the fulfillment of its objects.

Article 16:

The Agency shall lay down the internal regulations of the fund in agreement with the Minister of Finance. All the activities and transactions of the fund shall be subject to the control of the Central Audit Agency.

CHAPTER FOUR

INCENTIVES

Article 17:

The agency shall, in collaboration with the Ministry of Finance, establish a system of incentives that the Agency and the competent administrative departments can present to other agencies, establishments, individuals and others for their environmental protection activities or projects.

Article 18:

The system of incentives mentioned in the preceding Article shall be submitted to the Board of Directors of EEAA and approved by the Prime Minister.

PART ONE

PROTECTION OF LAND ENVIRONMENT FROM POLLUTION

CHAPTER ONE

DEVELOPMENT AND ENVIRONMENT

Article 19:

The competent administrative authority or the licensing authority shall assess the environmental impact of the establishment for which a license is sought by reference to the elements, designs, specifications and criteria issued by the EEAA in agreement with the competent administrative authorities. The executive regulations of the Law shall determine the establishments to which the provisions of this article apply.

Article 20:

The competent administrative authorities or the licensing authority shall send a copy of the environmental impact assessment mentioned in the preceding Article to the EEAA, to express its opinion thereon and propose measures required to be taken in the field of preparations and systems in order to treat negative environmental effects. The said authorities shall verify the implementation of the EEAA's proposals. The EEAA is required to furnish the competent administrative authority or the licensing authority with its opinion on the assessment within a maximum of 60 days from receiving same, otherwise the assessment shall be deemed to have been accepted by the EEAA.

Article 21:

The competent administrative authority shall notify the owner of the establishment of the result of the assessment by a registered letter with return receipt requested. The owner of the establishment may object to the result in writing within thirty days of notification before a committee to be formed by a decree of the Minister in charge of Environmental Affairs. The EEAA, the competent administrative authority or the licensing authority and the owner of the establishment shall be represented on the committee. The executive regulations shall determine the functions of the committee as well as its operating and complaint procedures.

Article 22:

Pursuant to the provisions of this Law, the owner of an establishment shall keep a written register to record the impact of his establishment activities on the environment. The executive regulations will determine the standard form of the required register, the time frame of the establishment obligation to keep it and the data to be entered therein. The EEAA is authorized to follow up entries in the register to ensure that they conform to the facts, to take samples as required and to conduct appropriate tests to determine the impact of the establishment activities on the environment and the extent of its compliance with the criteria laid down for the protection of the environment. In case of any violation, the EEAA shall notify the competent administrative authority to direct the owner of the establishment to rectify such violation forthwith. If the owner fails to comply within 60 days, the EEAA shall be entitled, in agreement with the competent administrative authority, to take such legal and judicial procedures as are necessary to stop the offending activity and claim adequate damages to redress the harm resulting from the violation.

Article 23:

Expansions and renovations of existing establishments shall be subject to the same provisions set forth in Articles 19, 20, 21 and 22 of this Law.

Article 24:

Environmental monitoring networks with their stations and working units shall be formed, pursuant to the provisions of this Law, and shall undertake, in their respective fields of specialization, to monitor the components and pollutants of the environment on a regular basis and make the results available to the authorities concerned. For the fulfillment of the foregoing, the networks may call on the assistance of research centres and competent authorities which shall furnish the networks with the studies and information they request. The Agency shall supervise the establishment and operation of the environmental monitoring networks.

Article 25:

The Agency shall lay down a contingency plan to deal with environmental disasters which shall be approved by the Cabinet. The contingency plan will be based in particular on the following:

- Gathering the information available at the national and international levels on ways of confronting environmental disasters and mitigating their harmful effects.

- Identifying the resources available at the national, regional and international levels and determining how they can be deployed to ensure a swift response to the disaster.

The contingency plan will include the following:

- Identifying the types of environmental disasters and the agencies responsible for reporting or predicting their occurrence.

- Establishing a central operations room to receive reports of environmental disasters and follow up the transmission of accurate information thereon in order to mobilize the necessary resources to deal with such disasters.

- Forming a task force to follow up the measures taken to confront an actual or predicted environmental disaster. The leader of the task force shall be vested with all the powers necessary to confront the disaster in cooperation and coordination with the competent authorities.

Article 26:

All public and private bodies and all individuals are held to provide prompt assistance and support, upon request, in order to confront the environmental disaster. The fund referred to in article 14 of this law shall reimburse private bodies and individuals for the actual expenses incurred.

Article 27:

An area of not less than one thousand square meters of state-owned land shall be allocated for the establishment of an arboretum for the cultivation of trees in each district and in each village. The output of these arboreta shall be available to agencies and individuals at cost price.

The competent administrative authorities to which these arboreta are affiliated shall lay down guidelines for the cultivation and protection of these trees. The EEAA shall participate in financing the establishment of these arboreta.

Article 28:

It is forbidden to hunt, kill, or catch the species of wild birds and animals determined in the executive regulations of this Law or to possess, transport, circulate with, sell or offer to sell such birds and animals either dead or alive. It is also forbidden to damage the nests or eggs of these birds.

The executive regulations of this Law shall determine the areas to which the provisions of this article apply and shall specify the conditions for a hunting license in these areas as well as the competent administrative authorities responsible for implementing the provisions of this article.

CHAPTER TWO

HAZARDOUS MATERIALS AND WASTE

Article 29:

It is forbidden to displace hazardous substances and waste without a license from the competent administrative authority. The executive regulations of this Law shall determine the procedures and conditions for granting such a license and the authority competent to issue same.

The ministers shall, each in his field of competence, issue in coordination with the Minister of Health and EEAA a table of the hazardous substances and waste referred to in para one of this article.

Article 30:

Management of hazardous waste shall be subject to the rules and procedures laid down in the executive regulations of this Law. The executive regulations shall designate the competent authority, which, after consulting EEAA, will issue the table of hazardous waste to which the provisions of this Law shall apply.

Article 31:

It is forbidden to construct any establishment for the treatment of hazardous waste without a license issued by the competent administrative authority after consulting the EEAA. Disposal of hazardous waste shall be in accordance with the conditions and criteria set forth in the executive regulations of this Law. The Minister of Housing shall, after consulting with the Ministries of Health and Industry and the EEAA, designate the disposal sites and determine the conditions of the license to dispose of hazardous waste.

Article 32:

It is forbidden to import hazardous waste or to allow its introduction into or its passage through Egyptian territories. It is forbidden without a permit from the

competent authority to allow the passage of ships carrying hazardous waste in territorial seas or in the exclusive maritime economic zone of the ARE.

Article 33:

Those engaged in the production or circulation of hazardous materials, either in gas, liquid or solid form, are held to take all precautions to ensure that no environmental damage shall occur

The owner of an establishment whose activities produce hazardous waste pursuant to the provisions of this Law shall be held to keep a register of such waste indicating the method of disposing thereof, and the agencies contracted with to receive the hazardous waste. The executive regulations shall determine the data to be recorded in the said register and the EEAA shall be responsible for following up the register to ensure its conformity with the facts.

PART TWO

PROTECTION OF AIR ENVIRONMENT FROM POLLUTION

Article 34:

The site on which a project is established must be suitable for the project activity to ensure that the permissible levels of air pollutants are not overstepped, and that the total pollution emitted by all the establishments in one area is within the permissible levels.

The executive regulations of this Law shall determine the establishments subject to its provisions, the authority competent to approve the site and the permissible levels of air pollutants and noise in the area where the establishment is constructed.

Article 35:

In carrying out their activities, establishments subject to the provisions of this Law are held to ensure that emissions or leakages of air pollutants do not exceed the maximum levels permitted by laws and decrees in force and determined in the executive regulations of this Law.

Article 36:

It is prohibited to use machines, engines or vehicles whose exhaust emissions exceed the limits set by the executive regulations of this Law.

Article 37:

It is prohibited to throw, treat or burn garbage and solid waste except in special sites designated for such purpose which are far from residential, industrial or agricultural areas as well as from water-ways. The executive regulations of this Law shall determine the specifications and conditions of such sites and their minimum distance from the areas referred to hereinabove.

Local units shall, in agreement with the EEAA, designate the sites for burning, throwing or treating garbage and solid waste according to the provisions of this article.

Article 38:

It is prohibited to spray or use pesticides or any other chemical compound for agriculture, public health or other purpose except after observing the conditions, regulations and safety measures laid down in the executive regulations of this Law and in a manner that will not expose humans, animals, plants, waterways and other components of the environment, directly or indirectly, now or in future, to the harmful effects of such pesticides or chemical compounds.

Article 39:

All organizations and individuals shall be held, when carrying out exploration, excavation, construction or demolition works or when transporting the resultant waste or debris, to take the necessary precautions to secure the safe storage or transportation thereof to prevent loose particles from escaping into the air, in accordance with the provisions of the executive regulations.

Article 40:

It is mandatory when burning any type of fuel or otherwise, whether for industrial, energy production, construction or other commercial purpose, that the harmful smoke, gases, and vapors resulting from the combustion process are within the permissible limits. The person responsible for such activity shall be held to take all precautions necessary to minimize the pollutants in the combustion products. The executive regulations of this Law shall define such precautions as well as the permissible limits and the specifications of chimneys and other means of controlling the emission of the smoke, gases, and vapors resulting from the combustion process.

Article 41:

All organizations undertaking activities in the field of exploration, drilling, extraction and production of crude oil, its refining and processing shall observe the regulations and procedures set forth in the Law and its executive regulations which are derived from principles governing the international petroleum industry as provided by the competent administrative authority.

Article 42:

All organizations and individuals shall be held, when carrying out production, service or other activities, particularly when operating machinery and equipment or using sirens and loudspeakers, to keep the volume below the permissible sound intensity level.

Licensing authorities shall ensure that the total sounds emanating from fixed sources in one area shall be within the permissible levels, and ascertain that the establishments select the appropriate machinery and equipment to guarantee this. The executive regulations of this Law shall define the permissible levels of sound intensity and the permissible time limits for exposure thereto.

Article 43:

The owner of an establishment is held to take all precautions and procedures necessary to prevent the leakage or emission of air pollutants inside the work premises except within the permissible limits as defined by the executive regulations of this Law, whether they result from the nature of the establishment activities or from malfunctioning equipment. He has to provide the necessary protective measures for workers in accordance with the conditions of occupational safety and health, including choosing the appropriate machinery, equipment, material and fuel, taking into account the period of exposure to these pollutants. He must also ensure adequate ventilation and install chimneys and other air purification devices.

Article 44:

The owner of an establishment shall take the necessary procedures to maintain temperature and humidity inside the work-place within the permissible limits. In cases where it is necessary to work beyond these limits, he shall be held to secure appropriate protective measures for the workers, whether by providing them with special clothing or otherwise. The executive regulations of this Law shall set the maximum and minimum limits of temperature and humidity and the duration of exposure thereto as well as the protective measures.

Article 45:

Closed and semi-closed public places must have adequate ventilation facilities consistent with the size of the place and its assimilative capacity as well as with the type of activity exercised therein to ensure renewal and purity of the air and maintain it at a suitable temperature.

Article 46:

The director in charge of the establishment must take adequate measures to prevent smoking in closed public places except within the permissible limits specified in the license issued for such establishments. In such case, a special area shall be reserved for smokers in such a way as not to affect the air in other areas.

Smoking is prohibited in means of public transport.

Article 47:

The level of radioactivity or concentration of radioactive substances in the air shall not exceed the permissible limits as determined by the competent authorities in accordance with the executive regulations of this Law.

PART THREE

PROTECTION OF WATER ENVIRONMENT FROM POLLUTION

CHAPTER ONE

POLLUTION FROM SHIPS

Section One
Oil Pollution

Article 48:

The aim of protecting the water environment from pollution is to achieve the following objectives:

a. To protect the coasts and ports of the Arab Republic of Egypt from the risks of pollution in all its forms and shapes.

b- To protect the environment of the territorial sea and the exclusive economic zone and their living or non-living natural resources by preventing, controlling and reducing pollution from any source.

c- To protect the natural resources in the economic zone and the continental shelf.

d- To compensate any natural or juridical person for any injury they sustain from the pollution of the water environment.

The Minister for Environmental Affairs in conjunction with the Minister of Maritime Transport and the competent administrative authorities referred to in para (38) of article (1) of this Law shall undertake to fulfill the aforesaid objectives, each within their respective fields of competence.

Article 49:

Ships of any nationality are forbidden to discharge oil or oily mixtures in the territorial sea or the exclusive economic zone of the Arab Republic of Egypt.

Military ships or support naval vessels of the Arab Republic of Egypt and other ships owned or operated by the state or by public authorities which are used in non-commercial governmental service and which are not subject to the provisions of the Convention shall take all necessary precautions to prevent pollution of the territorial sea or the exclusive economic zone of the Arab Republic of Egypt.

Article 50:

Ships registered in the Arab Republic of Egypt are forbidden to discharge oily or oil mixtures into the sea, in accordance with the Convention and international agreements to which the Arab Republic of Egypt adheres.

Article 51:

Foreign oil tankers calling at Egyptian ports must comply with all the requirements of Rule 13 of Annex 1 of the Convention as amended.

Oil tankers used in short voyages are exempt from these requirements pursuant to Rule 13c of the Convention as amended, as are oil tankers navigating the Suez Canal which are not obliged to discharge unclean ballast water.

Article 52:

National and foreign companies and organizations licensed to explore, extract or exploit off-shore oil fields and other marine natural resources, including oil transport facilities, are forbidden to discharge any polluting substances resulting from drilling, exploration, testing of wells or production in the territorial sea or the exclusive economic zone of the Arab Republic or Egypt. They are held to use safe measures not liable to harm the water environment and to treat any discharged waste or polluting substance according to the available technical methods and in accordance with the regulations of international conventions.

Article 53:

Without prejudice to the provisions of Law 79 of 1961 concerning marine disasters and shipwrecks, representatives of the competent administrative authority or judicial officers vested with the power to effect seizures shall be entitled to order the captain or the person in charge of the ship to take appropriate protection measures against the effects of pollution in the event of an accident involving a ship carrying an oil cargo which may pollute the territorial sea or the exclusive economic zone of the Arab Republic of Egypt.

Article 54:

The penalties prescribed in this Law shall not apply to cases of pollution resulting from:

a- Securing the safety of a ship or the lives of those on board.

b- Discharge resulting from damage to a ship or its equipment, provided such damage was not caused by the master or the person in charge to disable or destroy the ship or as a result of negligence. In all cases, the master of the ship or the person in charge thereof must have taken before and after the occurrence of damage all necessary precautions to prevent or reduce the effects of pollution and must have immediately notified the competent administrative authority.

c- A sudden break in the pipeline carrying oil or oily mixtures during the operating, drilling, exploring or testing of oil wells, without any negligence in supervising or maintaining the pipelines, provided sufficient precautions to supervise the operation of the pipeline and immediate measures to control the pollution and its sources have been taken.

This shall be without prejudice to the right of the competent authority to recover the costs of removing the effects of pollution from the party responsible therefor and to claim damages for losses incurred and injuries sustained by reason of such pollution.

Article 55:

The owner of the ship, its master or any person responsible therefor and those responsible for means of oil transport within the port areas or the territorial sea or the exclusive economic zone of the ARE and the companies working in the field of oil extraction are held to notify the competent administrative authorities of any oil spill immediately on its occurrence, with a description of the circumstances of the accident, the type of oil involved and the measures taken to stop or reduce the spill and such other information as determined in the Convention and the executive regulations of this Law.

In all cases, the competent administrative authorities are held to notify the EEAA of all particulars concerning the incident promptly on its occurrence.

Article 56:

All loading ports, ports equipped to receive oil tankers and all dockyards must be fitted out with the necessary equipment to receive unclean ballast water and the bilge wager from cleaning the tanks of oil tankers and other ships.

Ports must be equipped with enough barges and containers to receive the deposits, residues, and waste of oil and oily mixtures from ships docked in port.

No ship or tanker may be licensed to carry out loading and unloading works except after referring to the competent administrative authority which will receive and direct it to the locations for the disposal of waste and unclean ballast water.

Article 57:

he competent minister shall determine the tools and equipment for reducing pollution with which all ships registered in ARE or off-shore platforms installed in the water environment must be fitted out.

Foreign ships calling at Egyptian ports or passing through their littoral zones must be fitted out with pollution reducing equipment in accordance with the provisions of the Convention and its annexes.

Article 58:

Owners or masters of ships registered in the ARE as well as of ships pertaining to the states adhering to the Convention are held to keep a register of the oil on board in which shall be entered all operations relating to oil in the manner determined in the Convention, and in particular the following operations:

a- Loading, delivery or other oil cargo transport operations, while designating the type of oil.

b- Discharge of oil or oily mixture to secure the safety of the ship or its cargo or to save lives, while designating the type of oil.

c- Oil or oily mixture spills as a result of a collision or accident, while indicating the size of the spill.

d- Discharge of unclean ballast water or of bilge water from cleaning the tanks.

e. Disposal of polluting waste.

f. Discharge of machinery space bilges, containing the oil collected within the machinery space, outside the ship while in port.

The executive regulations shall determine the means of recording the processes of discharging oil or oily mixture, in respect of off-shore platforms installed in the water environment.

Article 59:

Without prejudice to the provisions of the International Convention on Civil Liability for Injuries Resulting from Oil Pollution Accidents signed in Brussels in 1969 as amended, all oil tankers whose total tonnage amounts to 2,000 tons or more and which are registered in ARE, and other oil transport equipment whose total tonnage amounts to 150 tons or more operating in the territorial sea or the exclusive economic zone of ARE, are held to present a financial guarantee certificate in the form of insurance or indemnity bond or any other form of guarantee to the competent administrative authority in accordance with the guidelines laid down in a decree from the Minister of Maritime Transport in agreement with the Minister of Petroleum and the Minister for Environmental Affairs.

The guarantee certificate must be presented when the tanker enters the territorial sea and shall be valid and cover all damages and compensation as assessed by the competent administrative authority.

With regard to ships registered in a country adhering to the International Convention on Civil Liability for Injuries Resulting from Oil Pollution Accidents, such certificate shall be issued from the competent authority in the country where the ship is registered.

Section Two

Pollution By Harmful Substances

Article 60:

It is prohibited for tankers carrying harmful liquid substances to discharge any harmful substances, waste or deposits intentionally or unintentionally, directly or indirectly, resulting in harm to the water environment or public health or to other legitimate uses of the sea. It is also prohibited for ships carrying harmful substances in receptacles, cisterns portable tanks or land or railroad containers to dispose of such substances in the territorial sea or in the exclusive economic zone of ARE.

It is prohibited to throw dead animals in the territorial sea or the exclusive economic zone of ARE.

Article 61:

All loading and unloading ports equipped to receive the tankers referred to in the first paragraph of the previous article, as well as all dockyards, shall be fitted out with adequate facilities to receive the harmful liquid substances and their wastes.

Article 62:

Tankers carrying harmful liquid substances must be provided with a cargo register pursuant to the Convention, in which the master of the ship or the person responsible for it shall record all operations as stated in the Convention.

Article 63:

Representatives of the competent administrative authority and the judicial officers vested with the power to effect seizures shall have the authority to order the ship's master or the person responsible for it to take the necessary measures to reduce the effects of pollution in the event of an accident to any ship carrying harmful substances that may pollute the territorial sea or the exclusive economic zone of the ARE in any way. Ships carrying harmful substances are forbidden to dump polluting substances and waste in the continental shelf or the exclusive economic zone of ARE.

Article 64:

The provisions of Article 54 of this Law shall apply to cases of pollution resulting from measures taken to save lives on board or to save the ship itself from harm.

Article 65:

The ship's master or the responsible person is held to implement all the conditions stated in Rule 8 of Annex 2 of the Convention.

Section Three

Pollution from Sewage and Garbage

Article 66:

Ships and off-shore platforms are prohibited from discharging their polluted waste-water in the territorial sea or the exclusive economic zone of the ARE. It must be disposed of according to the criteria and procedures laid down in the executive regulations of this Law.

Article 67:

All ships and off-shore platforms working in the field of exploration and exploitation of natural and mineral resources in the water environment of the ARE as well as ships calling at Egyptian ports, are forbidden to dispose of their garbage in the territorial sea or in the exclusive economic zone. Ships are held to deliver garbage to the reception facilities or to places designated by the competent administrative authority for fees to be fixed by a decree of the competent Minister.

Article 68:

All loading and unloading ports, all ports equipped to receive ships and all stable or floating dockyards must be fitted out with the necessary and adequate facilities to receive polluted waste water and garbage from ships.

CHAPTER TWO
POLLUTION FROM LAND BASED SOURCES

Article 69:

t is prohibited for all establishments, including public places and commercial, industrial, touristic and service establishments, to discharge or throw any untreated substances, wastes or liquids which may cause pollution along the Egyptian sea shores or adjoining waters either directly or indirectly, intentionally or unintentionally. Each day of such prohibited discharge shall be considered as a separate violation.

Article 70:

No building permits shall be granted for establishments or public places on or near the sea shore, which would result in the discharge of polluting substances in violation of the provisions of this Law and the decrees issued in implementation thereof unless the applicant for such permit conducts environmental impact studies and undertakes to provide waste treatment units and to operate them as soon as the establishment commences work.

Article 71:

The executive regulations of this Law shall define the specifications and criteria which must be observed by industrial establishments allowed to discharge degradable polluted substances after they have been treated. The administrative authority, specified in the said executive regulations, shall conduct periodic analysis of samples of the treated liquid waste in its laboratories and notify the competent administrative authorities of the results. In case of violations, the party concerned shall be granted a grace period of one month to treat the waste and render it compatible with the said specifications and standards. If treatment is not completed within the grace period as aforesaid or if the tests carried out during such period prove that continued

discharge would result in severe harm to the water environment, discharge shall be halted by administrative means and the establishment license shall be revoked without prejudice to the penalties prescribed in this Law. In addition, the executive regulations shall specify the non-degradable polluting substances which industrial establishments are prohibited from discharging in the water environment.

Article 72:

Without prejudice to the provisions of article 96 of this Law, representatives of the juridical persons or managers of the establishments mentioned in article 69 which discharge in the water environment shall be responsible for any acts carried out by their employees in violation of the provisions of the said article as well as for providing means of treatment in accordance with the criteria and specifications laid down in the executive regulations and shall be liable to the penalties prescribed in Article 87 of this Law.

Article 73:

It is prohibited to construct any establishment within 200 meters of the Egyptian coast lines without the permission of the competent administrative authority in coordination with the EEAA. The executive regulations of this Law shall lay down the procedures and conditions to be followed in this connection.

Article 74:

It is prohibited to take any measures that may affect the natural coast line or alter its configuration either inwards or outwards, without the approval of the competent authority in coordination with EEAA. The executive regulations of this law shall regulate the procedures and conditions to be followed in this connection.

Article 75:

The representatives of the concerned administrative authorities shall be entitled, each within its scope of competence and in coordination with the EEAA, to enter the exclusion zones referred to in articles 73 and 74 of this Law in order to inspect works being carried out therein. If they discover that works contrary to the foregoing provisions are being executed or are intended to be executed, the violator shall be ordered to restore matters to their original state otherwise the works will be halted administratively and matters restored to their original state at the expense of the violator and the beneficiary jointly. Payment shall be collected by means of administrative attachment.

CHAPTER THREE

INTERNATIONAL CERTIFICATES

Article 76:

Egyptian ships are held to obtain from the Ports and Lighthouse Department the international oil pollution prevention certificate or the international certificate for the prevention of pollution resulting from cargoes of harmful liquid substances in bulk. The issuance of the said certificates shall be in accordance with the provisions and conditions set forth in the Convention and the validity of the certificate shall not exceed five years from the date of its issuance.

Article 77:

All ships regularly carrying oil to or from Egyptian ports or from other oil transportation means within the territorial sea or the exclusive economic zone of ARE and which fly the flag of a state that is a signatory of the Convention must carry the international oil pollution prevention certificate which should be valid according to the Convention.

With regard to ships subject to the provisions of para 1 of this Article and flying the flag of a state that does not adhere to the Convention, the Minister of Maritime Transport shall determine the oil pollution prevention certificate that will be granted by the Ports and Lighthouse Department before licensing such ships to carry oil on a regular basis from an Egyptian port or from one of the means of oil transport within the exclusive economic zone.

CHAPTER FOUR

ADMINISTRATIVE AND JUDICIAL PROCEDURES

Article 78:

Representatives of competent administrative authorities and consular officials abroad shall be deemed judicial law officers vested with the power to effect seizures in respect of the application of the provisions of Part Three of this Law. The Minister of Justice in agreement with the competent ministers can vest other officials with this capacity according to the needs for implementing this Law and in compliance with the rules of International Law.

Article 79:

The judicial officers referred to in the preceding article are authorized in case of violation, and if the ship's master or the person responsible therefor wishes to leave the port immediately, to collect sums of money on a temporary basis pending settlement of the fines imposed and the damages awarded pursuant to the provisions of Part Four of this Law, provided the amount so collected shall

not be less than the minimum prescribed for the violation in addition to all expenses and damages determined by the competent administrative authority to remove the effects of the violation.

A financial guarantee covering the value of these amounts and accepted by the competent administrative authority may be presented, without prejudice to the provisions of the International Convention on Civil Liability for Oil Pollution signed in Brussels in 1969.

Article 80:

Without prejudice to the provisions of the Code of Criminal Procedure, the officers referred to in article 78 shall be entitled to board ships and off-shore platforms, and to enter establishments built on the shore and inspect the means used to transport oil and marine polluting substances to ensure compliance with the provisions of this Law and the decrees issued in implementation thereof as well as the availability of waste treatment equipment.

The competent administrative authority shall issue its decision on what it regards as necessary for the protection of the marine environment in the light of the results of this procedure. The party concerned can object to this decision before the appeals committee mentioned in article 81 of this Law within fifteen days from the date of his notification thereof. Such objection shall not result in suspending implementation of the decision unless the said committee issues a decision to suspend its implementation until the settlement of the dispute.

Article 81:

The minister concerned, as designated by the executive regulations of this Law shall issue a decree for the formation of the appeals committee. The committee shall be located within the working area of the port or in a nearby administrative authority and shall consist of the following members:

- A counselor from the State Council - Chairman.
- Representative of EEAA.
- Representative of the Ports and Lighthouses Department
- Representative of the Ministry of Defense.
- Representative of the Ministry of Petroleum and Mineral Wealth.
- Representative of the competent administrative authority within the scope of whose activities the violation occurred.

The committee may solicit the advice of one or more experts in the field of water environment. The function of this committee shall be to settle administrative disputes arising from the implementation of the provisions of Part Three of this Law. The committee shall issue its decision, after hearing both parties, by a majority decision of members present and in case of a tie, the chairman shall have the casting vote. The parties concerned may challenge the committee's decision before the Administrative Court of the State Council.

Article 82:

Every master or user of a ship calling at the Egyptian ports or licensed to operate in the territorial sea or the exclusive economic zone of ARE should provide the representatives of the competent administrative authority or the judicial officers responsible for implementing the provisions of this Law with the facilities required to perform their functions.

Article 83:

The competent administrative authorities may request assistance from the ministries of defense, interior, petroleum, and mineral resources, as well as from the Suez Canal Authority or any other competent agency, in implementing the provisions of Part Three of this Law according to the conditions laid down in the decree of the competent Minister.

PART FOUR

PENALTIES

Article 84:

Whoever violates the provisions of Article 28 of this Law shall be fined a sum of not less than two hundred Egyptian pounds and not more than five thousand Egyptian pounds. In addition, birds and animals seized as well as the machines and equipment used in the violation shall be confiscated.

Article 85:

Whoever violates the provisions of Articles 30, 31 and 33 of this Law shall be imprisoned for a period of not less than one year and/or fined ten thousand to twenty thousand Egyptian Pounds.

Article 86:

Whoever violates the provisions of article 36 of this Law shall be fined a sum of not less than two hundred Egyptian Pounds and not more than three hundred Egyptian Pounds. As to violations of the provisions of article 39 of this Law, these shall be punishable by a fine of not less than five hundred Egyptian Pounds and not more than one thousand Egyptian Pounds. The court may order the suspension of the license for a period of not less than one week and

not more than six months, and in case of recidivism, the court may revoke the license.

Article 87:

Whoever violates the provisions of article 42 of this Law by using loudspeakers with a volume exceeding the permissible levels of sound intensity shall be punished by a fine of not less than one hundred Egyptian Pounds and not more than five hundred Egyptian Pounds and the machines and equipment used in the violation shall be confiscated. Violators of the provisions of articles 38, 41, 69, and 70 of this Law shall be punished by a fine of not less than two hundred Egyptian Pounds and not more than twenty thousand Egyptian Pounds.

The fines imposed on those who violate the provisions of articles 35, 37, 40, 43, 44, or 45 of this Law shall be not less than one thousand Egyptian Pounds and not more than twenty thousand Egyptian Pounds. The same fine shall apply in respect of the non-compliance of the manager in charge of the establishment with the requirement to ban smoking in closed public places in violation of the provisions of para 1 of article 46 of this Law.

Anyone who smokes while using public transportation in violation of the provisions of para 2 of the said article shall be fined a sum of not less than ten Egyptian Pounds and not more than fifty Egyptian Pounds.

In case of recidivism, the penalty shall be imprisonment and the fine provided for in the preceding paragraphs.

Article 88:

Any person who violates the provisions of articles 29, 32, and 47 of the present Law shall be punished by imprisonment for a term of not less than five years and a fine of twenty thousand Egyptian Pounds to forty thousand Egyptian Pounds. Whoever violates the provisions of Article 32 shall be held to re-export the hazardous wastes subject of the crime at his own expense.

Article 89:

Any person who violates the provisions of article 2, the last paragraph of article 3, or articles 4, 5, and 7 of Law No. 48 of 1982 concerning the protection of the River Nile and waterways from pollution, and of the decrees issued in implementation thereof shall be fined a sum of not less than two hundred Egyptian Pounds and not more than twenty thousand Egyptian Pounds.

In case of recidivism, the penalty shall be both imprisonment and the fine provided for in the previous paragraph.

In all cases, the violator shall be held to remove or rectify the violating works by the date determined by the Ministry of Public Works and Water Resources. If the violating works are not removed or rectified by the due date, the Ministry of Public Works and Water Resources shall have the right to take procedures to

remove or rectify the violation by administrative means, at the expense of the violator, without prejudice to the right of the Ministry to revoke the license.

Article 90:

Whoever commits one of the following acts shall be fined a sum of not less than one hundred and fifty thousand Egyptian Pounds and not more than five hundred thousand Egyptian Pounds.

1. Discharges oil or oily mixtures or harmful substances in the territorial sea or the exclusive economic zone in violation of articles 49 and 60 of this Law.

2. Fails to comply with the requirement to treat the wastes and polluting substances discharged, or fails to use safe procedures which prevent damage to the water environment in violation of article 52 of this Law.

3. Discharges any other substance that pollutes the environment.

In case of recidivism, the penalty shall be both imprisonment and the fine provided for in the preceding paragraph.

In all cases, the violator shall be held to remove the effects of the violation within the time frame determined by the competent administrative authority, otherwise the administrative authority shall proceed with the removal at his expense.

Article 91:

A penalty of imprisonment and/or a fine of not less than one hundred and fifty thousand pounds and not more than five hundred thousand pounds shall be imposed on any one violating the provisions of article 54 hereof. Such party shall also be charged with the expenses of removing the effects of such violation as determined by the authorities commissioned to effect removal, if unloading, resulting from damage to the ship or its equipment, is carried out in order to delay or damage the ship or is due to negligence.

The fine shall be doubled in case of recidivism, and the executive regulations of the present Law shall lay down parameters for determining the value of the fine by reference to the extent of pollution and the environmental consequences arising from the violation of this article.

Article 92:

Whoever commits one of the following acts shall be fined a sum of not less than seventy thousand Egyptian Pounds and not more than three hundred thousand Egyptian Pounds:

1. Fails to fit out a foreign ship using Egyptian ports or navigating through the special marine area with pollution control equipment, in violation of article 57 of this Law.

2. Fails to take the necessary precautions to prevent or reduce the effects of pollution before and after the occurrence of damage to the ship or to its equipment or fails to promptly notify the competent administrative authority of the discharge resulting from damage to the ship or to its equipment in violation of the provisions of article 54-b of this Law.

3. Fails to promptly notify the competent administrative authority of any oil spill, the circumstances in which it occurred, the nature and percentage of the substance discharged and the measures taken, in violation of the provisions of article 55 of this Law.

The fine shall be doubled in case of recidivism in respect of item (1), while the repetition of the violations mentioned in items (2) and (3) shall be punished by imprisonment and/or a fine of not less than three hundred thousand Egyptian Pounds and not more than five hundred thousand Egyptian Pounds.

In all cases, the violator shall be held to remove the effects of the violation within the time frame determined by the competent administrative authority, otherwise the administrative authority shall proceed with their removal at the expense of the violator.

Article 93:

Whoever commits one of the following acts shall be fined a sum of not less than forty thousand Egyptian Pounds and not more than two hundred thousand Egyptian Pounds:

1. Loading and unloading works by ships or tankers without having a license from the competent administrative authority in violation of the provisions of article 56 of this Law.

2. Failure of the ship or the tanker to keep the certificates and registers stipulated in articles 58, 62, 76 and 77 of this Law.

3. Discharges polluted waste-water or throws garbage from ships in violation of the provisions of articles 66 and 67 of this Law.

4. Discharges oil or oily mixtures into the sea in violation of the provisions of article 50 of this Law by any ship registered in the Arab Republic of Egypt.

Article 94:

Whoever commits one of the following acts shall be fined a sum of not less than forty thousand Egyptian Pounds and not more than one hundred and fifty thousand Egyptian Pounds:

1. Fails to fit out the ships registered in ARE with the instruments and equipment necessary to reduce pollution in violation of the provisions of article 57 of this Law.

2. Contravenes the orders of the inspectors of the competent administrative authority or the judicial officers in case of an accident to a ship carrying oil or harmful substances pursuant to the provisions of articles 53 and 63 of this Law.

Article 95:

Whoever intentionally violates the provisions of this Law shall be punished by imprisonment for a term of not more than 10 years if such violation results in causing a permanent incurable disability to an individual. The penalty shall be imprisonment if the violation results in causing this infirmity to three or more persons.

If the violation results in the death of a person, the penalty shall be temporary hard labour, and if it results in the death of three persons or more the penalty shall be permanent hard labour.

Article 96:

The ship's master or the person responsible therefor and the parties to contracts for the exploration, extraction and exploitation of marine oil fields and other natural resources including oil transport facilities as well as the owners of the establishments mentioned in article 69 of this Law shall be jointly liable, each within his scope of competence, for any harm that befalls any natural or juridical person as a result of a violation of the provisions of this Law as well as for payment of imposed fines and the expenses of removing the effects of such violations.

Article 97:

The penalties stipulated in the previous articles shall be imposed on all ships of all nationalities and types including those belonging to states not bound by the Convention if they discharge oil or oily mixtures or commit prohibited dumping or submerging in the territorial sea or the exclusive economic zone of the ARE.

Article 98:

Penalties for violating the provisions of articles 73 and 74 of this Law shall be imprisonment for a period of not more than six months and/or a fine of not less than one thousand Egyptian Pounds and not more than twenty thousand Egyptian Pounds.

The court may not order a stay of execution of the fine, and in all cases, the violating works must be halted and removed by administrative means at the expense of the violator and the machinery, equipment and materials used in these works shall be seized without awaiting a court sentence. In case of conviction, such machinery and equipment shall be confiscated.

Article 99:

Jurisdiction over the crimes referred to in this Law shall lie with the court within the circumscription of which any such crime is committed, if it is committed by the ships referred to in article 97 within the territorial waters of the ARE or in the exclusive economic zone. The court shall rule on the case expeditiously.

Jurisdiction over the crimes committed outside the two areas mentioned in this article shall lie with the court within the circumscription of which the port in which the ship flying the Egyptian flag is registered.

Article 100:

Without prejudice to the provisions of Article 79, the competent administrative authority may take legal procedures to detain any ship which fails to pay the instant fines and/or in the summary cases stipulated in the said article.

Such detention shall be lifted if due payments are made or an unconditional financial guarantee accepted by the competent administrative authority is presented.

Article 101:

The imposition of the penalties stipulated in this Law shall be without prejudice to the imposition of any more severe penalty prescribed in another law.

FINAL PROVISIONS

Article 102:

Without prejudice to the provisions of article 78 of this Law, the employees of the EEAA and its branches in the governorates designated by a decree of the Minister of Justice in agreement with the Minister in charge of Environmental Affairs shall have the capacity of judicial officers vested with the power to effect seizures in proving the commission of crimes in violation of the provisions of this Law or the decrees issued in implementation thereof.

Article 103:

Every citizen and organization concerned with the protection of the environment shall have the right to report any violation of the provisions of this Law.

Article 104:

Inspectors of administrative authorities concerned as well as the inspectors of the Environmental Affairs Agency (EEAA) who have the capacity of judicial officers in matters relating to the environment shall be held, each in his field of competence, to report to the authority to which they belong any violation of the provisions of this Law and the authorities concerned shall then take the necessary legal procedures.

METHOD 9095B

PAINT FILTER LIQUIDS TEST

1.0 SCOPE AND APPLICATION

1.1 This method is used to determine the presence of free liquids in a representative sample of waste.

1.2 The method is used to determine compliance with 40 CFR 264.314 and 265.314.

2.0 SUMMARY OF METHOD

2.1 A predetermined amount of material is placed in a paint filter. If any portion of the material passes through and drops from the filter within the 5-min test period, the material is deemed to contain free liquids.

3.0 INTERFERENCES

3.1 Filter media were observed to separate from the filter cone on exposure to alkaline materials. This development causes no problem if the sample is not disturbed.

3.2 Temperature can affect the test results if the test is performed below the freezing point of any liquid in the sample. Tests must be performed above the freezing point and can, but are not required to, exceed room temperature of 25 ^{o}C.

4.0 APPARATUS AND MATERIALS

4.1 Conical paint filter -- Mesh number 60 +/- 5% (fine meshed size). Available at local paint stores such as Sherwin-Williams and Glidden.

4.2 Glass funnel -- If the paint filter, with the waste, cannot sustain its weight on the ring stand, then a fluted glass funnel or glass funnel with a mouth large enough to allow at least 1 in. of the filter mesh to protrude should be used to support the filter. The funnel should be fluted or have a large open mouth in order to support the paint filter yet not interfere with the movement, to the graduated cylinder, of the liquid that passes through the filter mesh.

4.3 Ring stand and ring, or tripod.

4.4 Graduated cylinder or beaker -- 100-mL.

5.0 REAGENTS

5.1 None.

6.0 SAMPLE COLLECTION, PRESERVATION, AND HANDLING

A 100-mL or 100-g representative sample is required for the test. If it is not possible to obtain a sample of 100 mL or 100 g that is sufficiently representative of the waste, the analyst may use larger size samples in multiples of 100 mL or 100 g, i.e., 200, 300, 400 mL or g. However, when larger samples are used, analysts shall divide the sample into 100-mL or 100-g portions and test each portion separately. If any portion contains free liquids, the entire sample is considered to have free liquids. If the sample is measured volumetrically, then it should lack major air spaces or voids.

7.0 PROCEDURE

7.1 Assemble test apparatus as shown in Figure 1.

7.2 Place sample in the filter. A funnel may be used to provide support for the paint filter. If the sample is of such light bulk density that it overflows the filter, then the sides of the filter can be extended upward by taping filter paper to the inside of the filter and above the mesh. Settling the sample into the paint filter may be facilitated by lightly tapping the side of the filter as it is being filled.

7.3 In order to assure uniformity and standardization of the test, material such as sorbent pads or pillows which do not conform to the shape of the paint filter should be cut into small pieces and poured into the filter. Sample size reduction may be accomplished by cutting the sorbent material with scissors, shears, a knife, or other such device so as to preserve as much of the original integrity of the sorbent fabric as possible. Sorbents enclosed in a fabric should be mixed with the resultant fabric pieces. The particles to be tested should be reduced smaller than 1 cm (i.e., should be capable of passing through a 9.5 mm (0.375 inch) standard sieve). Grinding sorbent materials should be avoided as this may destroy the integrity of the sorbent and produce many "fine particles" which would normally not be present.

7.4 For brittle materials larger than 1 cm that do not conform to the filter, light crushing to reduce oversize particles is acceptable if it is not practical to cut the material. Materials such as clay, silica gel, and some polymers may fall into this category.

7.5 Allow sample to drain for 5 min into the graduated cylinder.

7.6 If any portion of the test material collects in the graduated cylinder in the 5-min period, then the material is deemed to contain free liquids for purposes of 40 CFR 264.314 and 265.314.

8.0 QUALITY CONTROL

8.1 Duplicate samples should be analyzed on a routine basis.

9.0 METHOD PERFORMANCE

9.1 No data provided.

10.0 REFERENCES

10.1 None provided.

FIGURE 1
PAINT FILTER TEST APPARATUS

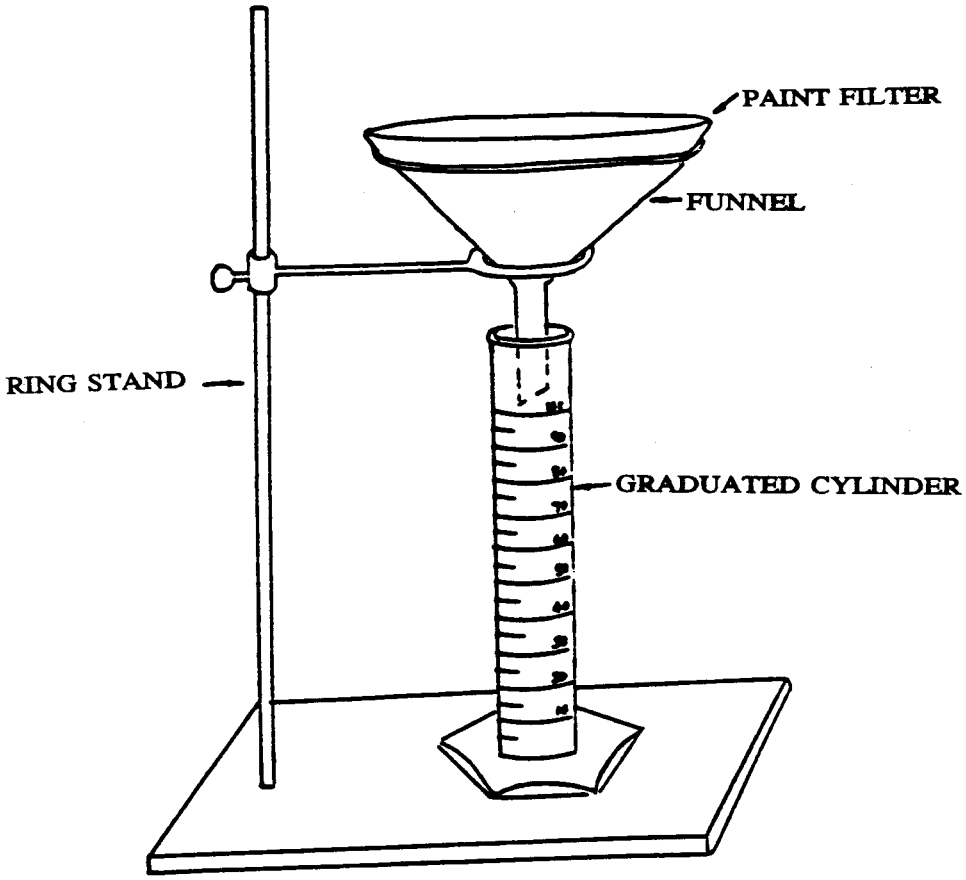

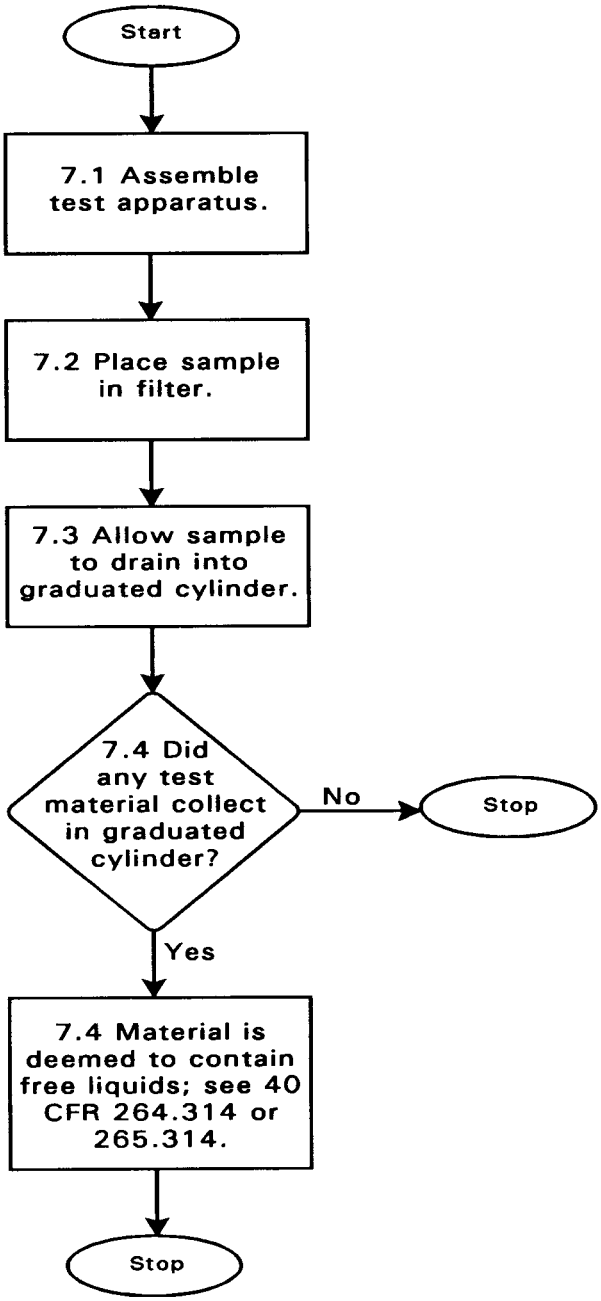
Start
7.1 Assemble test apparatus.
7.2 Place sample in filter.
7.3 Allow sample to drain into graduated cylinder.
7.4 Did any test material collect in graduated cylinder?
No
Stop
Yes
7.4 Material is deemed to contain free liquids; see 40 CFR 264.314 or 265.314.
Stop

LIST OF U.S. SUPPLIERS OF HAZARDOUS WASTE TREATMENT PRODUCTS AND SERVICES

Perma-Fix Environmental Services, Inc.
8302 Dunwoody Place, Ste 250
Atlanta, GA 30350
Ph: 770-587-9898
www.perma-fix.com

American Ecology Corporation
300 E. Mallard Drive, Ste 300
Boise ID 83706
Ph: 800-590-5220. Fax : 208-331-7900.
www.americanecology.com
info@americanecology.com

Triumvirate Environmental
61 Innerbelt Road
Somerville, MA 02143
Ph: 800-966-9282
www.triumvirate.com

Veolia Environmental Services North American Corporation
200 E Randolph Drive. Suite 7900
Chicago, Il 60601
Ph: 312-552-2800. Fax: 312-552-2866.
www.veolia.com

The Environmental Quality Company
36255 Michigan Avenue
Wayne, MI 48184
Ph: 800-592-5489 Fax : 734-329-8135.
www.eqonline.com

Clean Harbors Environmental Services
42 Longwater drive
P.O.Box 9149
Norwell, MA 02061-9149
Ph: 800-282-0058.
www.cleanharbors.com

McCutcheon Enterprise
250 Park Road
Apollo, PA 15613
Ph: 724-568-3623. Fax: 724-568-2571.
www.completewastemanagement.com

Eastern Environmental Technologies, Inc.
47 Purdy Avenue
Port Chester, NY 10573
Ph: 800-808-7227. Fax: 914-934-9659

Chemtron Corporation
35850 Schneider Court
Avon, Ohio
Ph: 440-933-6348.
www.chemtron-corp.com
info@chemtron-corp.com

Bethlehem Apparatus Co. Inc
890 front Street, P.O. Box Y
Hellertown, PA 18055
Ph: 610-838-7034. Fax: 610-838-6333

Nexgen Enviro Systems, Inc.
143 Cortland Street
Lindenhurst, NY 11757
Ph: 800-842-1630. Fax: 631-226-3125.
www.nexgenenviro.com

CBG Technologies, Inc.
2211 Lake Club Drive. Suite 205
Columbus, OH 43232
Ph: 800-941-9484. Fax: 614-863-1676.
www.cbgtechnologies.com

Oregon Environmental Systems
8523 Wakkila Terrace
Beaverton, OR 97007
Ph: 866-667-6622. Fax: 503-579-4118.
www.orenviro.com

Chemical Solvents, Inc.
3751 Jennings Road
Cleveland, OH 44109
Ph: 216-741-9310. Fax: 216-741-4080.
www.chemicalsolvents.com

Safety Kleen Corporation
5360 Legacy Drive
Bldg.2, Ste.100
Plano, TX 75024
Ph: 800-669-5740.
www.safety-kleen.com

AE & E Von Roll Inc.
302 Research Drive, Ste 130.
Norcross, GA 30092
Ph: 770-613-9788. Fax: 770-613-9860.
info@aee-vonroll.com

Enercon Systems
300 Huron street
Elyria, OH 44035-4829
Ph: 440-323-7080. Fax: 440-323-5734.
info@enerconsystems.com

International Waste Industries Inc.
P.O.Box 9829
McLean, VA 22102
Ph: 703-442-5303. Fax: 703-442-5103.
www.iwi-systems.com

Envitech Inc.
2924 Emerson Street. Ste 320
San Diego, CA 92106
Ph: 619-223-9925. Fax: 619-223-9938.
www.envitechinc.com

Pressnall Technology Inc
3316 S.72nd W.
Tulsa, OK 74107
Ph: 918-445-0237. Fax: 918-445-0237.
www.presstechinc.com

National Incinerator Inc
305 N. 7th Street
Corsicana, TX 75110
Ph: 903-872-4651. Fax: 903-872-6062.
www.national-incinerator.com

ACS Inc.
1999 Alpine Way
Bellingham, WA 98226
Ph: 360-676-6005. Fax: 360-647-9439.
www.acs-acs.com

Emtroll LLC
1440-T Veterans Memorial Highway
Islandia, NY 11749
Ph: 631-582-9700. Fax: 631-234-8445.
www.emtrolcorp.com

T-Thermal Company
5 Sentry Parkway. E, Ste. 204
Blue Bell, PA 19422
Ph: 267-243-8940. Fax: 610-834-0473.
www.t-thermal.com

Enviro Associates International, Inc
169 Commack Road, #155
Commack, NY 11725
Ph: 631-499-7111. Fax: 631-499-1427
www.enviroassociates.com

SCS Engineers
3900 Kilroy Airport Way, Suite 100
Long Beach. CA 10806
Ph: 562-426-9544. Fax: 562-426-9175
www.scsengineers.com

Shaw Environmental
190 milk Street
Westborough, MA 01581
Ph: 508-667-7677. Fax: 508-435-9641
www.shawgroup.com

Title 40: Protection of Environment

Browse Previous | Browse Next

PART 262—STANDARDS APPLICABLE TO GENERATORS OF HAZARDOUS WASTE

Section Contents

Subpart A—General

§ 262.10 Purpose, scope, and applicability.
§ 262.11 Hazardous waste determination.
§ 262.12 EPA identification numbers.

Subpart B—The Manifest

§ 262.20 General requirements.
§ 262.21 Manifest tracking numbers, manifest printing, and obtaining manifests.
§ 262.22 Number of copies.
§ 262.23 Use of the manifest.
§ 262.27 Waste minimization certification.

Subpart C—Pre-Transport Requirements

§ 262.30 Packaging.
§ 262.31 Labeling.
§ 262.32 Marking.
§ 262.33 Placarding.
§ 262.34 Accumulation time.

Subpart D—Recordkeeping and Reporting

§ 262.40 Recordkeeping.
§ 262.41 Biennial report.
§ 262.42 Exception reporting.
§ 262.43 Additional reporting.
§ 262.44 Special requirements for generators of between 100 and 1000 kg/mo.

Subpart E—Exports of Hazardous Waste

§ 262.50 Applicability.
§ 262.51 Definitions.
§ 262.52 General requirements.
§ 262.53 Notification of intent to export.
§ 262.54 Special manifest requirements.
§ 262.55 Exception reports.
§ 262.56 Annual reports.
§ 262.57 Recordkeeping.
§ 262.58 International agreements.

Subpart F—Imports of Hazardous Waste

Title 40: Protection of Environment

PART 264—STANDARDS FOR OWNERS AND OPERATORS OF HAZARDOUS WASTE TREATMENT, STORAGE, AND DISPOSAL FACILITIES

Section Contents

Subpart A—General

§ 264.1 Purpose, scope and applicability.
§ 264.2 [Reserved]
§ 264.3 Relationship to interim status standards.
§ 264.4 Imminent hazard action.

Subpart B—General Facility Standards

§ 264.10 Applicability.
§ 264.11 Identification number.
§ 264.12 Required notices.
§ 264.13 General waste analysis.
§ 264.14 Security.
§ 264.15 General inspection requirements.
§ 264.16 Personnel training.
§ 264.17 General requirements for ignitable, reactive, or incompatible wastes.
§ 264.18 Location standards.
§ 264.19 Construction quality assurance program.

Subpart C—Preparedness and Prevention

§ 264.30 Applicability.
§ 264.31 Design and operation of facility.
§ 264.32 Required equipment.
§ 264.33 Testing and maintenance of equipment.
§ 264.34 Access to communications or alarm system.
§ 264.35 Required aisle space.
§ 264.36 [Reserved]
§ 264.37 Arrangements with local authorities.

Subpart D—Contingency Plan and Emergency Procedures

§ 264.50 Applicability.
§ 264.51 Purpose and implementation of contingency plan.
§ 264.52 Content of contingency plan.
§ 264.53 Copies of contingency plan.
§ 264.54 Amendment of contingency plan.
§ 264.55 Emergency coordinator.
§ 264.56 Emergency procedures.

Subpart E—Manifest System, Recordkeeping, and Reporting

§ 264.70 Applicability.
§ 264.71 Use of manifest system.
§ 264.72 Manifest discrepancies.

§ 264.73 Operating record.
§ 264.74 Availability, retention, and disposition of records.
§ 264.75 Biennial report.
§ 264.76 Unmanifested waste report.
§ 264.77 Additional reports.

Subpart F—Releases From Solid Waste Management Units

§ 264.90 Applicability.
§ 264.91 Required programs.
§ 264.92 Ground-water protection standard.
§ 264.93 Hazardous constituents.
§ 264.94 Concentration limits.
§ 264.95 Point of compliance.
§ 264.96 Compliance period.
§ 264.97 General ground-water monitoring requirements.
§ 264.98 Detection monitoring program.
§ 264.99 Compliance monitoring program.
§ 264.100 Corrective action program.
§ 264.101 Corrective action for solid waste management units.

Subpart G—Closure and Post-Closure

§ 264.110 Applicability.
§ 264.111 Closure performance standard.
§ 264.112 Closure plan; amendment of plan.
§ 264.113 Closure; time allowed for closure.
§ 264.114 Disposal or decontamination of equipment, structures and soils.
§ 264.115 Certification of closure.
§ 264.116 Survey plat.
§ 264.117 Post-closure care and use of property.
§ 264.118 Post-closure plan; amendment of plan.
§ 264.119 Post-closure notices.
§ 264.120 Certification of completion of post-closure care.

Subpart H—Financial Requirements

§ 264.140 Applicability.
§ 264.141 Definitions of terms as used in this subpart.
§ 264.142 Cost estimate for closure.
§ 264.143 Financial assurance for closure.
§ 264.144 Cost estimate for post-closure care.
§ 264.145 Financial assurance for post-closure care.
§ 264.146 Use of a mechanism for financial assurance of both closure and post-closure care.
§ 264.147 Liability requirements.
§ 264.148 Incapacity of owners or operators, guarantors, or financial institutions.
§ 264.149 Use of State-required mechanisms.
§ 264.150 State assumption of responsibility.
§ 264.151 Wording of the instruments.

Subpart I—Use and Management of Containers

§ 264.170 Applicability.
§ 264.171 Condition of containers.
§ 264.172 Compatibility of waste with containers.

§ 264.173 Management of containers.
§ 264.174 Inspections.
§ 264.175 Containment.
§ 264.176 Special requirements for ignitable or reactive waste.
§ 264.177 Special requirements for incompatible wastes.
§ 264.178 Closure.
§ 264.179 Air emission standards.

Subpart J—Tank Systems

§ 264.190 Applicability.
§ 264.191 Assessment of existing tank system's integrity.
§ 264.192 Design and installation of new tank systems or components.
§ 264.193 Containment and detection of releases.
§ 264.194 General operating requirements.
§ 264.195 Inspections.
§ 264.196 Response to leaks or spills and disposition of leaking or unfit-for-use tank systems.
§ 264.197 Closure and post-closure care.
§ 264.198 Special requirements for ignitable or reactive wastes.
§ 264.199 Special requirements for incompatible wastes.
§ 264.200 Air emission standards.

Subpart K—Surface Impoundments

§ 264.220 Applicability.
§ 264.221 Design and operating requirements.
§ 264.222 Action leakage rate.
§ 264.223 Response actions.
§§ 264.224-264.225 [Reserved]
§ 264.226 Monitoring and inspection.
§ 264.227 Emergency repairs; contingency plans.
§ 264.228 Closure and post-closure care.
§ 264.229 Special requirements for ignitable or reactive waste.
§ 264.230 Special requirements for incompatible wastes.
§ 264.231 Special requirements for hazardous wastes FO20, FO21, FO22, FO23, FO26, and FO27.
§ 264.232 Air emission standards.

Subpart L—Waste Piles

§ 264.250 Applicability.
§ 264.251 Design and operating requirements.
§ 264.252 Action leakage rate.
§ 264.253 Response actions.
§ 264.254 Monitoring and inspection.
§ 264.255 [Reserved]
§ 264.256 Special requirements for ignitable or reactive waste.
§ 264.257 Special requirements for incompatible wastes.
§ 264.258 Closure and post-closure care.
§ 264.259 Special requirements for hazardous wastes FO20, FO21, FO22, FO23, FO26, and FO27.

Subpart M—Land Treatment

§ 264.270 Applicability.
§ 264.271 Treatment program.
§ 264.272 Treatment demonstration.

§ 264.273 Design and operating requirements.
§§ 264.274-264.275 [Reserved]
§ 264.276 Food-chain crops.
§ 264.277 [Reserved]
§ 264.278 Unsaturated zone monitoring.
§ 264.279 Recordkeeping.
§ 264.280 Closure and post-closure care.
§ 264.281 Special requirements for ignitable or reactive waste.
§ 264.282 Special requirements for incompatible wastes.
§ 264.283 Special requirements for hazardous wastes FO20, FO21, FO22, FO23, FO26, and FO27.

Subpart N—Landfills

§ 264.300 Applicability.
§ 264.301 Design and operating requirements.
§ 264.302 Action leakage rate.
§ 264.303 Monitoring and inspection.
§ 264.304 Response actions.
§§ 264.305-264.308 [Reserved]
§ 264.309 Surveying and recordkeeping.
§ 264.310 Closure and post-closure care.
§ 264.311 [Reserved]
§ 264.312 Special requirements for ignitable or reactive waste.
§ 264.313 Special requirements for incompatible wastes.
§ 264.314 Special requirements for bulk and containerized liquids.
§ 264.315 Special requirements for containers.
§ 264.316 Disposal of small containers of hazardous waste in overpacked drums (lab packs).
§ 264.317 Special requirements for hazardous wastes FO20, FO21, FO22, FO23, FO26, and FO27.

Subpart O—Incinerators

§ 264.340 Applicability.
§ 264.341 Waste analysis.
§ 264.342 Principal organic hazardous constituents (POHCs).
§ 264.343 Performance standards.
§ 264.344 Hazardous waste incinerator permits.
§ 264.345 Operating requirements.
§ 264.346 [Reserved]
§ 264.347 Monitoring and inspections.
§§ 264.348-264.350 [Reserved]
§ 264.351 Closure.

Subparts P–R [Reserved]

Subpart S—Special Provisions for Cleanup

§ 264.550 Applicability of Corrective Action Management Unit (CAMU) regulations.
§ 264.551 Grandfathered Corrective Action Management Units (CAMUs).
§ 264.552 Corrective Action Management Units (CAMU).
§ 264.553 Temporary Units (TU).
§ 264.554 Staging piles.
§ 264.555 Disposal of CAMU-eligible wastes in permitted hazardous waste landfills.

Subparts T–V [Reserved]

Subpart W—Drip Pads

§ 264.570 Applicability.
§ 264.571 Assessment of existing drip pad integrity.
§ 264.572 Design and installation of new drip pads.
§ 264.573 Design and operating requirements.
§ 264.574 Inspections.
§ 264.575 Closure.

Subpart X—Miscellaneous Units

§ 264.600 Applicability.
§ 264.601 Environmental performance standards.
§ 264.602 Monitoring, analysis, inspection, response, reporting, and corrective action.
§ 264.603 Post-closure care.

Subparts Y–Z [Reserved]

Subpart AA—Air Emission Standards for Process Vents

§ 264.1030 Applicability.
§ 264.1031 Definitions.
§ 264.1032 Standards: Process vents.
§ 264.1033 Standards: Closed-vent systems and control devices.
§ 264.1034 Test methods and procedures.
§ 264.1035 Recordkeeping requirements.
§ 264.1036 Reporting requirements.
§§ 264.1037-264.1049 [Reserved]

Subpart BB—Air Emission Standards for Equipment Leaks

§ 264.1050 Applicability.
§ 264.1051 Definitions.
§ 264.1052 Standards: Pumps in light liquid service.
§ 264.1053 Standards: Compressors.
§ 264.1054 Standards: Pressure relief devices in gas/vapor service.
§ 264.1055 Standards: Sampling connection systems.
§ 264.1056 Standards: Open-ended valves or lines.
§ 264.1057 Standards: Valves in gas/vapor service or in light liquid service.
§ 264.1058 Standards: Pumps and valves in heavy liquid service, pressure relief devices in light liquid or heavy liquid service, and flanges and other connectors.
§ 264.1059 Standards: Delay of repair.
§ 264.1060 Standards: Closed-vent systems and control devices.
§ 264.1061 Alternative standards for valves in gas/vapor service or in light liquid service: percentage of valves allowed to leak.
§ 264.1062 Alternative standards for valves in gas/vapor service or in light liquid service: skip period leak detection and repair.
§ 264.1063 Test methods and procedures.
§ 264.1064 Recordkeeping requirements.
§ 264.1065 Reporting requirements.
§§ 264.1066-264.1079 [Reserved]

Subpart CC—Air Emission Standards for Tanks, Surface Impoundments, and Containers

§ 264.1080 Applicability.
§ 264.1081 Definitions.
§ 264.1082 Standards: General.
§ 264.1083 Waste determination procedures.
§ 264.1084 Standards: Tanks.
§ 264.1085 Standards: Surface impoundments.
§ 264.1086 Standards: Containers.
§ 264.1087 Standards: Closed-vent systems and control devices.
§ 264.1088 Inspection and monitoring requirements.
§ 264.1089 Recordkeeping requirements.
§ 264.1090 Reporting requirements.
§ 264.1091 [Reserved]

Subpart DD—Containment Buildings

§ 264.1100 Applicability.
§ 264.1101 Design and operating standards.
§ 264.1102 Closure and post-closure care.
§§ 264.1103-264.1110 [Reserved]

Subpart EE—Hazardous Waste Munitions and Explosives Storage

§ 264.1200 Applicability.
§ 264.1201 Design and operating standards.
§ 264.1202 Closure and post-closure care.
Appendix I to Part 264—Recordkeeping Instructions
Appendixes II–III to Part 264 [Reserved]
Appendix IV to Part 264—Cochran's Approximation to the Behrens-Fisher Students' t-test
Appendix V to Part 264—Examples of Potentially Incompatible Waste
Appendix VI to Part 264—Political Jurisdictions[1] in Which Compliance With §264.18(a) Must Be Demonstrated
Appendixes VII–VIII to Part 264 [Reserved]
Appendix IX to Part 264—Ground-Water Monitoring List

Authority: 42 U.S.C. 6905, 6912(a), 6924, and 6925.

Source: 45 FR 33221, May 19, 1980, unless otherwise noted.

Subpart A—General

top

§ 264.1 Purpose, scope and applicability.

top

(a) The purpose of this part is to establish minimum national standards which define the acceptable management of hazardous waste.

(b) The standards in this part apply to owners and operators of all facilities which treat, store, or dispose of hazardous waste, except as specifically provided otherwise in this part or part 261 of this chapter.

(c) The requirements of this part apply to a person disposing of hazardous waste by means of ocean disposal subject to a permit issued under the Marine Protection, Research, and Sanctuaries Act only to the extent they are included in a RCRA permit by rule granted to such a person under part 270 of this chapter.

[*Comment:* These part 264 regulations do apply to the treatment or storage of hazardous waste before it is loaded onto an ocean vessel for incineration or disposal at sea.]

(d) The requirements of this part apply to a person disposing of hazardous waste by means of underground injection subject to a permit issued under an Underground Injection Control (UIC) program approved or promulgated under the Safe Drinking Water Act only to the extent they are required by §144.14 of this chapter.

[*Comment:* These part 264 regulations do apply to the above-ground treatment or storage of hazardous waste before it is injected underground.]

(e) The requirements of this part apply to the owner or operator of a POTW which treats, stores, or disposes of hazardous waste only to the extent they are included in a RCRA permit by rule granted to such a person under part 270 of this chapter.

(f) The requirements of this part do not apply to a person who treats, stores, or disposes of hazardous waste in a State with a RCRA hazardous waste program authorized under subpart A of part 271 of this chapter, or in a State authorized under subpart B of part 271 of this chapter for the component or components of Phase II interim authorization which correspond to the person's treatment, storage or disposal processes; except that this part will apply:

(1) As stated in paragraph (d) of this section, if the authorized State RCRA program does not cover disposal of hazardous waste by means of underground injection; and

(2) To a person who treats, stores or disposes of hazardous waste in a State authorized under subpart A of part 271 of this chapter, at a facility which was not covered by standards under this part when the State obtained authorization, and for which EPA promulgates standards under this part after the State is authorized. This paragraph will only apply until the State is authorized to permit such facilities under subpart A of part 271 of this chapter.

(3) To a person who treats, stores, or disposes of hazardous waste in a State which is authorized under subpart A or B of part 271 of this chapter if the State has not been authorized to carry out the requirements and prohibitions applicable to the treatment, storage, or disposal of hazardous waste at his facility which are imposed pursuant to the Hazardous and Solid Waste Amendments of 1984. The requirements and prohibitions that are applicable until a State receives authorization to carry them out include all Federal program requirements identified in §271.1(j).

(g) The requirements of this part do not apply to:

(1) The owner or operator of a facility permitted, licensed, or registered by a State to manage municipal or industrial solid waste, if the only hazardous waste the facility treats, stores, or disposes of is excluded from regulation under this part by §261.5 of this chapter;

(2) The owner or operator of a facility managing recyclable materials described in §261.6 (a)(2), (3), and (4) of this chapter (except to the extent they are referred to in part 279 or subparts C, F, G, or H of part 266 of this chapter).

(3) A generator accumulating waste on-site in compliance with §262.34 of this chapter;

(4) A farmer disposing of waste pesticides from his own use in compliance with §262.70 of this chapter; or

(5) The owner or operator of a totally enclosed treatment facility, as defined in §260.10.

(6) The owner or operator of an elementary neutralization unit or a wastewater treatment unit as defined in §260.10 of this chapter, provided that if the owner or operator is diluting hazardous ignitable (D001) wastes (other than the D001 High TOC Subcategory defined in §268.40 of this chapter, Table Treatment Standards for Hazardous Wastes), or reactive (D003) waste, to remove the characteristic before land disposal, the owner/operator must comply with the requirements set out in §264.17(b).

(7) [Reserved]

(8)(i) Except as provided in paragraph (g)(8)(ii) of this section, a person engaged in treatment or containment activities during immediate response to any of the following situations:

(A) A discharge of a hazardous waste;

(B) An imminent and substantial threat of a discharge of hazardous waste;

(C) A discharge of a material which, when discharged, becomes a hazardous waste.

(D) An immediate threat to human health, public safety, property, or the environment, from the known or suspected presence of military munitions, other explosive material, or an explosive device, as determined by an explosive or munitions emergency response specialist as defined in 40 CFR 260.10.

(ii) An owner or operator of a facility otherwise regulated by this part must comply with all applicable requirements of subparts C and D.

(iii) Any person who is covered by paragraph (g)(8)(i) of this section and who continues or initiates hazardous waste treatment or containment activities after the immediate response is over is subject to all applicable requirements of this part and parts 122 through 124 of this chapter for those activities.

(iv) In the case of an explosives or munitions emergency response, if a Federal, State, Tribal or local official acting within the scope of his or her official responsibilities, or an explosives or munitions emergency response specialist, determines that immediate removal of the material or waste is necessary to protect human health or the environment, that official or specialist may authorize the removal of the material or waste by transporters who do not have EPA identification numbers and without the preparation of a manifest. In the case of emergencies involving military munitions, the responding military emergency response specialist's organizational unit must retain records for three years identifying the dates of the response, the responsible persons responding, the type and description of material addressed, and its disposition.

(9) A transporter storing manifested shipments of hazardous waste in containers meeting the requirements of 40 CFR 262.30 at a transfer facility for a period of ten days or less.

(10) The addition of absorbent material to waste in a container (as defined in §260.10 of this chapter) or the addition of waste to absorbent material in a container, provided that these actions occur at the time waste is first placed in the container; and §§264.17(b), 264.171, and 264.172 are complied with.

(11) Universal waste handlers and universal waste transporters (as defined in 40 CFR 260.10) handling the wastes listed below. These handlers are subject to regulation under 40 CFR part 273, when handling the below listed universal wastes.

(i) Batteries as described in 40 CFR 273.2;

(ii) Pesticides as described in §273.3 of this chapter;

(iii) Mercury-containing equipment as described in §273.4 of this chapter; and

(iv) Lamps as described in §273.5 of this chapter.

(12) A New York State Utility central collection facility consolidating hazardous waste in accordance with 40 CFR 262.90.

(h) The requirements of this part apply to owners or operators of all facilities which treat, store, or dispose of hazardous wastes referred to in part 268.

(i) Section 266.205 of this chapter identifies when the requirements of this part apply to the storage of military munitions classified as solid waste under §266.202 of this chapter. The treatment and disposal of hazardous waste military munitions are subject to the applicable permitting, procedural, and technical standards in 40 CFR parts 260 through 270.

(j) The requirements of subparts B, C, and D of this part and §264.101 do not apply to remediation waste management sites. (However, some remediation waste management sites may be a part of a facility that is subject to a traditional RCRA permit because the facility is also treating, storing or disposing of hazardous wastes that are not remediation wastes. In these cases,

Subparts B, C, and D of this part, and §264.101 do apply to the facility subject to the traditional RCRA permit.) Instead of the requirements of subparts B, C, and D of this part, owners or operators of remediation waste management sites must:

(1) Obtain an EPA identification number by applying to the Administrator using EPA Form 8700–12;

(2) Obtain a detailed chemical and physical analysis of a representative sample of the hazardous remediation wastes to be managed at the site. At a minimum, the analysis must contain all of the information which must be known to treat, store or dispose of the waste according to this part and part 268 of this chapter, and must be kept accurate and up to date;

(3) Prevent people who are unaware of the danger from entering, and minimize the possibility for unauthorized people or livestock to enter onto the active portion of the remediation waste management site, unless the owner or operator can demonstrate to the Director that:

(i) Physical contact with the waste, structures, or equipment within the active portion of the remediation waste management site will not injure people or livestock who may enter the active portion of the remediation waste management site; and

(ii) Disturbance of the waste or equipment by people or livestock who enter onto the active portion of the remediation waste management site, will not cause a violation of the requirements of this part;

(4) Inspect the remediation waste management site for malfunctions, deterioration, operator errors, and discharges that may be causing, or may lead to, a release of hazardous waste constituents to the environment, or a threat to human health. The owner or operator must conduct these inspections often enough to identify problems in time to correct them before they harm human health or the environment, and must remedy the problem before it leads to a human health or environmental hazard. Where a hazard is imminent or has already occurred, the owner/operator must take remedial action immediately;

(5) Provide personnel with classroom or on-the-job training on how to perform their duties in a way that ensures the remediation waste management site complies with the requirements of this part, and on how to respond effectively to emergencies;

(6) Take precautions to prevent accidental ignition or reaction of ignitable or reactive waste, and prevent threats to human health and the environment from ignitable, reactive and incompatible waste;

(7) For remediation waste management sites subject to regulation under subparts I through O and subpart X of this part, the owner/operator must design, construct, operate, and maintain a unit within a 100-year floodplain to prevent washout of any hazardous waste by a 100-year flood, unless the owner/operator can meet the demonstration of §264.18(b);

(8) Not place any non-containerized or bulk liquid hazardous waste in any salt dome formation, salt bed formation, underground mine or cave;

(9) Develop and maintain a construction quality assurance program for all surface impoundments, waste piles and landfill units that are required to comply with §§264.221(c) and (d), 264.251(c) and (d), and 264.301(c) and (d) at the remediation waste management site, according to the requirements of §264.19;

(10) Develop and maintain procedures to prevent accidents and a contingency and emergency plan to control accidents that occur. These procedures must address proper design, construction, maintenance, and operation of remediation waste management units at the site. The goal of the plan must be to minimize the possibility of, and the hazards from a fire, explosion, or any unplanned sudden or non-sudden release of hazardous waste or hazardous waste constituents to air, soil, or surface water that could threaten human health or the environment. The plan must explain specifically how to treat, store and dispose of the hazardous remediation waste in question, and must be implemented immediately whenever a fire, explosion, or release of hazardous waste or hazardous waste constituents which could threaten human health or the environment;

(11) Designate at least one employee, either on the facility premises or on call (that is, available to respond to an emergency by reaching the facility quickly), to coordinate all emergency response measures. This emergency coordinator must be thoroughly familiar with all aspects of the facility's contingency plan, all operations and activities at the facility, the location and characteristics of waste handled, the location of all records within the facility, and the facility layout. In addition, this person must have the authority to commit the resources needed to carry out the contingency plan;

(12) Develop, maintain and implement a plan to meet the requirements in paragraphs (j)(2) through (j)(6) and (j)(9) through (j)(10) of this section; and

(13) Maintain records documenting compliance with paragraphs (j)(1) through (j)(12) of this section.

[45 FR 33221, May 19, 1980]

Editorial Note: ForFederal Registercitations affecting §264.1, see the List of CFR Sections Affected, which appears in the Finding Aids section of the printed volume and on GPO Access.

§ 264.2 [Reserved]

top

§ 264.3 Relationship to interim status standards.

top

A facility owner or operator who has fully complied with the requirements for interim status—as defined in section 3005(e) of RCRA and regulations under §270.70 of this chapter—must comply with the regulations specified in part 265 of this chapter in lieu of the regulations in this part, until final administrative disposition of his permit application is made, except as provided under 40 CFR part 264 subpart S.

[*Comment:* As stated in section 3005(a) of RCRA, after the effective date of regulations under that section, i.e., parts 270 and 124 of this chapter, the treatment, storage, or disposal of hazardous waste is prohibited except in accordance with a permit. Section 3005(e) of RCRA provides for the continued operation of an existing facility which meets certain conditions until final administrative disposition of the owner's or operator's permit application is made.]

[45 FR 33221, May 19, 1980, as amended at 48 FR 14294, Apr. 1, 1983; 58 FR 8683, Feb. 16, 1993]

§ 264.4 Imminent hazard action.

top

Notwithstanding any other provisions of these regulations, enforcement actions may be brought pursuant to section 7003 of RCRA.

[45 FR 33221, May 19, 1980, as amended at 71 FR 40272, July 14, 2006]

Subpart B—General Facility Standards

top

§ 264.10 Applicability.

top

(a) The regulations in this subpart apply to owners and operators of all hazardous waste facilities, except as provided in §264.1 and in paragraph (b) of this section.

(b) Section 264.18(b) applies only to facilities subject to regulation under subparts I through O and subpart X of this part.

[46 FR 2848, Jan. 12, 1981, as amended at 52 FR 46963, Dec. 10, 1987]

§ 264.11 Identification number.

top

Every facility owner or operator must apply to EPA for an EPA identification number in accordance with the EPA notification procedures (45 FR 12746).

[45 FR 33221, May 19, 1980, as amended at 50 FR 4514, Jan. 31, 1985]

§ 264.12 Required notices.

top

(a)(1) The owner or operator of a facility that has arranged to receive hazardous waste from a foreign source must notify the Regional Administrator in writing at least four weeks in advance of the date the waste is expected to arrive at the facility. Notice of subsequent shipments of the same waste from the same foreign source is not required.

(2) The owner or operator of a recovery facility that has arranged to receive hazardous waste subject to 40 CFR part 262, subpart H must provide a copy of the tracking document bearing all required signatures to the notifier, to the Office of Enforcement and Compliance Assurance, Office of Compliance, Enforcement Planning, Targeting and Data Division (2222A), Environmental Protection Agency, 1200 Pennsylvania Ave., NW., Washington, DC 20460; and to the competent authorities of all other concerned countries within three working days of receipt of the shipment. The original of the signed tracking document must be maintained at the facility for at least three years.

(b) The owner or operator of a facility that receives hazardous waste from an off-site source (except where the owner or operator is also the generator) must inform the generator in writing that he has the appropriate permit(s) for, and will accept, the waste the generator is shipping. The owner or operator must keep a copy of this written notice as part of the operating record.

(c) Before transferring ownership or operation of a facility during its operating life, or of a disposal facility during the post-closure care period, the owner or operator must notify the new owner or operator in writing of the requirements of this part and part 270 of this chapter.

[*Comment:* An owner's or operator's failure to notify the new owner or operator of the requirements of this part in no way relieves the new owner or operator of his obligation to comply with all applicable requirements.]

[45 FR 33221, May 19, 1980, as amended at 48 FR 14294, Apr. 1, 1983; 50 FR 4514, Jan. 31, 1985; 61 FR 16315, Apr. 12, 1996]

§ 264.13 General waste analysis.

top

(a)(1) Before an owner or operator treats, stores, or disposes of any hazardous wastes, or nonhazardous wastes if applicable under §264.113(d), he must obtain a detailed chemical and physical analysis of a representative sample of the wastes. At a minimum, the analysis must contain all the information which must be known to treat, store, or dispose of the waste in accordance with this part and part 268 of this chapter.

(2) The analysis may include data developed under part 261 of this chapter, and existing published or documented data on the hazardous waste or on hazardous waste generated from similar processes.

[*1:* For example, the facility's records of analyses performed on the waste before the effective date of these regulations, or studies conducted on hazardous waste generated from processes similar to that which generated the waste to be managed at the facility, may be included in the data base required to comply with paragraph (a)(1) of this section. The owner or operator of an off-site facility may arrange for the generator of the hazardous waste to supply part of the information required by paragraph (a)(1) of this section, except as otherwise specified in 40 CFR 268.7 (b) and (c). If the generator does not supply the information, and the owner or operator chooses to accept a hazardous waste, the owner or operator is responsible for obtaining the information required to comply with this section.]

(3) The analysis must be repeated as necessary to ensure that it is accurate and up to date. At a minimum, the analysis must be repeated:

(i) When the owner or operator is notified, or has reason to believe, that the process or operation generating the hazardous wastes, or non-hazardous wastes if applicable under §264.113(d), has changed; and

(ii) For off-site facilities, when the results of the inspection required in paragraph (a)(4) of this section indicate that the hazardous waste received at the facility does not match the waste designated on the accompanying manifest or shipping paper.

(4) The owner or operator of an off-site facility must inspect and, if necessary, analyze each hazardous waste movement received at the facility to determine whether it matches the identity of the waste specified on the accompanying manifest or shipping paper.

(b) The owner or operator must develop and follow a written waste analysis plan which describes the procedures which he will carry out to comply with paragraph (a) of this section. He must keep this plan at the facility. At a minimum, the plan must specify:

(1) The parameters for which each hazardous waste, or non-hazardous waste if applicable under §264.113(d), will be analyzed and the rationale for the selection of these parameters (i.e., how analysis for these parameters will provide sufficient information on the waste's properties to comply with paragraph (a) of this section);

(2) The test methods which will be used to test for these parameters;

(3) The sampling method which will be used to obtain a representative sample of the waste to be analyzed. A representative sample may be obtained using either:

(i) One of the sampling methods described in appendix I of part 261 of this chapter; or

(ii) An equivalent sampling method.

[*Comment:* See §260.21 of this chapter for related discussion.]

(4) The frequency with which the initial analysis of the waste will be reviewed or repeated to ensure that the analysis is accurate and up to date; and

(5) For off-site facilities, the waste analyses that hazardous waste generators have agreed to supply.

(6) Where applicable, the methods that will be used to meet the additional waste analysis requirements for specific waste management methods as specified in §§264.17, 264.314, 264.341, 264.1034(d), 264.1063(d), 264.1083, and 268.7 of this chapter.

(7) For surface impoundments exempted from land disposal restrictions under §268.4(a), the procedures and schedules for:

(i) The sampling of impoundment contents;

(ii) The analysis of test data; and,

(iii) The annual removal of residues which are not delisted under §260.22 of this chapter or which exhibit a characteristic of hazardous waste and either:

(A) Do not meet applicable treatment standards of part 268, subpart D; or

(B) Where no treatment standards have been established:

(*1*) Such residues are prohibited from land disposal under §268.32 or RCRA section 3004(d); or

(*2*) Such residues are prohibited from land disposal under §268.33(f).

(8) For owners and operators seeking an exemption to the air emission standards of subpart CC in accordance with §264.1082—

(i) If direct measurement is used for the waste determination, the procedures and schedules for waste sampling and analysis, and the results of the analysis of test data to verify the exemption.

(ii) If knowledge of the waste is used for the waste determination, any information prepared by the facility owner or operator or by the generator of the hazardous waste, if the waste is received from off-site, that is used as the basis for knowledge of the waste.

(c) For off-site facilities, the waste analysis plan required in paragraph (b) of this section must also specify the procedures which will be used to in-spect and, if necessary, analyze each movement of hazardous waste received at the facility to ensure that it matches the identity of the waste designated on the accompanying manifest or shipping paper. At a minimum, the plan must describe:

(1) The procedures which will be used to determine the identity of each movement of waste managed at the facility; and

(2) The sampling method which will be used to obtain a representative sample of the waste to be identified, if the identification method includes sampling.

(3) The procedures that the owner or operator of an off-site landfill receiving containerized hazardous waste will use to determine whether a hazardous waste generator or treater has added a biodegradable sorbent to the waste in the container.

[*Comment:* Part 270 of this chapter requires that the waste analysis plan be submitted with part B of the permit application.]

[45 FR 33221, May 19, 1980, as amended at 46 FR 2848, Jan. 12, 1981; 50 FR 4514, Jan. 31, 1985; 51 FR 40637, Nov. 7, 1986; 53 FR 31211, Aug. 17, 1988; 54 FR 33394, Aug. 14, 1989; 55 FR 22685, June 1, 1990; 55 FR 25494, June 21, 1990; 57 FR 8088, Mar. 6, 1992; 57 FR 54460, Nov. 18, 1992; 59 FR 62926, Dec. 6, 1994; 61 FR 4911, Feb. 9, 1996; 71 FR 40272, July 14, 2006]

§ 264.14 Security.

top

(a) The owner or operator must prevent the unknowing entry, and minimize the possibility for the unauthorized entry, of persons or livestock onto the active portion of his facility, *unless* he can demonstrate to the Regional Administrator that:

(1) Physical contact with the waste, structures, or equipment within the active portion of the facility will not injure unknowing or unauthorized persons or livestock which may enter the active portion of a facility; and

(2) Disturbance of the waste or equipment, by the unknowing or unauthorized entry of persons or livestock onto the active portion of a facility, will not cause a violation of the requirements of this part.

[*Comment:* Part 270 of this chapter requires that an owner or operator who wishes to make the demonstration referred to above must do so with part B of the permit application.]

(b) Unless the owner or operator has made a successful demonstration under paragraphs (a) (1) and (2) of this section, a facility must have:

(1) A 24-hour surveillance system (e.g., television monitoring or surveillance by guards or facility personnel) which continuously monitors and controls entry onto the active portion of the facility; or

(2)(i) An artificial or natural barrier (e.g., a fence in good repair or a fence combined with a cliff), which completely surrounds the active portion of the facility; and

(ii) A means to control entry, at all times, through the gates or other entrances to the active portion of the facility (e.g., an attendant, television monitors, locked entrance, or controlled roadway access to the facility).

[*Comment:* The requirements of paragraph (b) of this section are satisfied if the facility or plant within which the active portion is located itself has a surveillance system, or a barrier and a means to control entry, which complies with the requirements of paragraph (b) (1) or (2) of this section.]

(c) Unless the owner or operator has made a successful demonstration under paragraphs (a) (1) and (2) of this section, a sign with the legend, "Danger—Unauthorized Personnel Keep Out", must be posted at each entrance to the active portion of a facility, and at other locations, in sufficient numbers to be seen from any approach to this active portion. The legend must be written in English and in any other language predominant in the area surrounding the facility (e.g., facilities in counties bordering the Canadian province of Quebec must post signs in French; facilities in counties bordering Mexico must post signs in Spanish), and must be legible from a distance of at least 25 feet. Existing signs with a legend other than "Danger—Unauthorized Personnel Keep Out" may be used if the legend on the sign indicates that only authorized personnel are allowed to enter the active portion, and that entry onto the active portion can be dangerous.

[*Comment:* See §264.117(b) for discussion of security requirements at disposal facilities during the post-closure care period.]

[45 FR 33221, May 19, 1980, as amended at 46 FR 2848, Jan. 12, 1981; 48 FR 14294, Apr. 1, 1983; 50 FR 4514, Jan. 31, 1985]

§ 264.15 General inspection requirements.

top

(a) The owner or operator must inspect his facility for malfunctions and deterioration, operator errors, and discharges which may be causing—or may lead to—(1) release of hazardous waste constituents to the environment or (2) a threat to human health. The owner or operator must conduct these inspections often enough to identify problems in time to correct them before they harm human health or the environment.

(b)(1) The owner or operator must develop and follow a written schedule for inspecting monitoring equipment, safety and emergency equipment, security devices, and operating and structural equipment (such as dikes and sump pumps) that are important to preventing, detecting, or responding to environmental or human health hazards.

(2) He must keep this schedule at the facility.

(3) The schedule must identify the types of problems (e.g., malfunctions or deterioration) which are to be looked for during the inspection (e.g., inoperative sump pump, leaking fitting, eroding dike, etc.).

(4) The frequency of inspection may vary for the items on the schedule. However, the frequency should be based on the rate of deterioration of the equipment and the probability of an environmental or human health incident if the deterioration, malfunction, or operator error goes undetected between inspections. Areas subject to spills, such as loading and unloading areas, must be inspected daily when in use, except for Performance Track member facilities, that must inspect at least once each month, upon approval by the Director, as described in paragraph (b)(5) of this section. At a minimum, the inspection schedule must include the items and frequencies called for in §§264.174, 264.193, 264.195, 264.226, 264.254, 264.278, 264.303, 264.347, 264.602, 264.1033, 264.1052, 264.1053, 264.1058, and 264.1083 through 264.1089 of this part, where applicable.

[*Comment:* Part 270 of this chapter requires the inspection schedule to be submitted with part B of the permit application. EPA will evaluate the schedule along with the rest of the application to ensure that it adequately protects human health and the environment. As part of this review, EPA may modify or amend the schedule as may be necessary.]

(5) Performance Track member facilities that choose to reduce their inspection frequency must:

(i) Submit a request for a Class I permit modification with prior approval to the Director. The modification request must identify the facility as a member of the National Environmental Performance Track Program and identify the management units for reduced inspections and the proposed frequency of inspections. The modification request must also specify, in writing, that the reduced inspection frequency will apply for as long as the facility is a Performance Track member facility, and that within seven calendar days of ceasing to be a Performance Track member, the facility will revert to the non-Performance Track inspection frequency. Inspections must be conducted at least once each month.

(ii) Within 60 days, the Director will notify the Performance Track member facility, in writing, if the request is approved, denied, or if an extension to the 60-day deadline is needed. This notice must be placed in the facility's operating record. The Performance Track member facility should consider the application approved if the Director does not: deny the application; or notify the Performance Track member facility of an extension to the 60-day deadline. In these situations, the Performance Track member facility must adhere to the revised inspection schedule outlined in its request for a Class 1 permit modification and keep a copy of the application in the facility's operating record.

(iii) Any Performance Track member facility that discontinues their membership or is terminated from the program must immediately notify the Director of their change in status. The facility must place in its operating record a dated copy of this notification and revert back to the non-Performance Track inspection frequencies within seven calendar days.

(c) The owner or operator must remedy any deterioration or malfunction of equipment or structures which the inspection reveals on a schedule which ensures that the problem does not lead to an environmental or human health hazard. Where a hazard is imminent or has already occurred, remedial action must be taken immediately.

(d) The owner or operator must record inspections in an inspection log or summary. He must keep these records for at least three years from the date of inspection. At a minimum, these records must include the date and time of the inspection, the name of the inspector, a notation of the observations made, and the date and nature of any repairs or other remedial actions.

[45 FR 33221, May 19, 1980, as amended at 48 FR 14294, Apr. 1, 1983; 50 FR 4514, Jan. 31, 1985; 57 FR 3486, Jan. 29, 1992; 59 FR 62926, Dec. 6, 1994; 62 FR 64656, Dec. 8, 1997; 71 FR 16903, Apr. 4, 2006]

§ 264.16 Personnel training.

top

(a)(1) Facility personnel must successfully complete a program of classroom instruction or on-the-job training that teaches them to perform their duties in a way that ensures the facility's compliance with the requirements of this part. The owner or operator must ensure that this program includes all the elements described in the document required under paragraph (d)(3) of this section.

[*Comment:* Part 270 of this chapter requires that owners and operators submit with part B of the RCRA permit application, an outline of the training program used (or to be used) at the facility and a brief description of how the training program is designed to meet actual job tasks.]

(2) This program must be directed by a person trained in hazardous waste management procedures, and must include instruction which teaches facility personnel hazardous waste management procedures (including contingency plan implementation) relevant to the positions in which they are employed.

(3) At a minimum, the training program must be designed to ensure that facility personnel are able to respond effectively to emergencies by familiarizing them with emergency procedures, emergency equipment, and emergency systems, including, where applicable:

(i) Procedures for using, inspecting, repairing, and replacing facility emergency and monitoring equipment;

(ii) Key parameters for automatic waste feed cut-off systems;

(iii) Communications or alarm systems;

(iv) Response to fires or explosions;

(v) Response to ground-water contamination incidents; and

(vi) Shutdown of operations.

(4) For facility employees that receive emergency response training pursuant to Occupational Safety and Health Administration (OSHA) regulations 29 CFR 1910.120(p)(8) and 1910.120(q),

the facility is not required to provide separate emergency response training pursuant to this section, provided that the overall facility training meets all the requirements of this section.

(b) Facility personnel must successfully complete the program required in paragraph (a) of this section within six months after the effective date of these regulations or six months after the date of their employment or assignment to a facility, or to a new position at a facility, whichever is later. Employees hired after the effective date of these regulations must not work in unsupervised positions until they have completed the training requirements of paragraph (a) of this section.

(c) Facility personnel must take part in an annual review of the initial training required in paragraph (a) of this section.

(d) The owner or operator must maintain the following documents and records at the facility:

(1) The job title for each position at the facility related to hazardous waste management, and the name of the employee filling each job;

(2) A written job description for each position listed under paragraph (d)(1) of this section. This description may be consistent in its degree of specificity with descriptions for other similar positions in the same company location or bargaining unit, but must include the requisite skill, education, or other qualifications, and duties of employees assigned to each position;

(3) A written description of the type and amount of both introductory and continuing training that will be given to each person filling a position listed under paragraph (d)(1) of this section;

(4) Records that document that the training or job experience required under paragraphs (a), (b), and (c) of this section has been given to, and completed by, facility personnel.

(e) Training records on current personnel must be kept until closure of the facility; training records on former employees must be kept for at least three years from the date the employee last worked at the facility. Personnel training records may accompany personnel transferred within the same company.

[45 FR 33221, May 19, 1980, as amended at 46 FR 2848, Jan. 12, 1981; 48 FR 14294, Apr. 1, 1983; 50 FR 4514, Jan. 31, 1985; 71 FR 16903, Apr. 4, 2006]

§ 264.17 General requirements for ignitable, reactive, or incompatible wastes.

top

(a) The owner or operator must take precautions to prevent accidental ignition or reaction of ignitable or reactive waste. This waste must be separated and protected from sources of ignition or reaction including but not limited to: open flames, smoking, cutting and welding, hot surfaces, frictional heat, sparks (static, electrical, or mechanical), spontaneous ignition (e.g., from heat-producing chemical reactions), and radiant heat. While ignitable or reactive waste is being handled, the owner or operator must confine smoking and open flame to specially designated

locations. “No Smoking” signs must be conspicuously placed wherever there is a hazard from ignitable or reactive waste.

(b) Where specifically required by other sections of this part, the owner or operator of a facility that treats, stores or disposes ignitable or reactive waste, or mixes incompatible waste or incompatible wastes and other materials, must take precautions to prevent reactions which:

(1) Generate extreme heat or pressure, fire or explosions, or violent reactions;

(2) Produce uncontrolled toxic mists, fumes, dusts, or gases in sufficient quantities to threaten human health or the environment;

(3) Produce uncontrolled flammable fumes or gases in sufficient quantities to pose a risk of fire or explosions;

(4) Damage the structural integrity of the device or facility;

(5) Through other like means threaten human health or the environment.

(c) When required to comply with paragraph (a) or (b) of this section, the owner or operator must document that compliance. This documentation may be based on references to published scientific or engineering literature, data from trial tests (e.g., bench scale or pilot scale tests), waste analyses (as specified in §264.13), or the results of the treatment of similar wastes by similar treatment processes and under similar operating conditions.

[46 FR 2848, Jan. 12, 1981, as amended at 50 FR 4514, Jan. 31, 1985; 71 FR 40272, July 14, 2006]

§ 264.18 Location standards.

top

(a) *Seismic considerations.* (1) Portions of new facilities where treatment, storage, or disposal of hazardous waste will be conducted must not be located within 61 meters (200 feet) of a fault which has had displacement in Holocene time.

(2) As used in paragraph (a)(1) of this section:

(i) “Fault” means a fracture along which rocks on one side have been displaced with respect to those on the other side.

(ii) “Displacement” means the relative movement of any two sides of a fault measured in any direction.

(iii) “Holocene” means the most recent epoch of the Quaternary period, extending from the end of the Pleistocene to the present.

[*Comment:* Procedures for demonstrating compliance with this standard in part B of the permit application are specified in §270.14(b)(11). Facilities which are located in political jurisdictions other than those listed in appendix VI of this part, are assumed to be in compliance with this requirement.]

(b) *Floodplains.* (1) A facility located in a 100-year floodplain must be designed, constructed, operated, and maintained to prevent washout or any hazardous waste by a 100-year flood, *unless* the owner or operator can demonstrate to the Regional Administrator's satisfaction that:

(i) Procedures are in effect which will cause the waste to be removed safely, before flood waters can reach the facility, to a location where the wastes will not be vulnerable to flood waters; or

(ii) For existing surface impoundments, waste piles, land treatment units, landfills, and miscellaneous units, no adverse effects on human health or the environment will result if washout occurs, considering:

(A) The volume and physical and chemical characteristics of the waste in the facility;

(B) The concentration of hazardous constituents that would potentially affect surface waters as a result of washout;

(C) The impact of such concentrations on the current or potential uses of and water quality standards established for the affected surface waters; and

(D) The impact of hazardous constituents on the sediments of affected surface waters or the soils of the 100- year floodplain that could result from washout.

[*Comment:* The location where wastes are moved must be a facility which is either permitted by EPA under part 270 of this chapter, authorized to manage hazardous waste by a State with a hazardous waste management program authorized under part 271 of this chapter, or in interim status under parts 270 and 265 of this chapter.]

(2) As used in paragraph (b)(1) of this section:

(i) “100-year floodplain” means any land area which is subject to a one percent or greater chance of flooding in any given year from any source.

(ii) “Washout” means the movement of hazardous waste from the active portion of the facility as a result of flooding.

(iii) “100-year flood” means a flood that has a one percent chance of being equalled or exceeded in any given year.

[*Comment:* (1) Requirements pertaining to other Federal laws which affect the location and permitting of facilities are found in §270.3 of this chapter. For details relative to these laws, see EPA's manual for SEA (special environmental area) requirements for hazardous waste facility permits. Though EPA is responsible for complying with these requirements, applicants are advised to consider them in planning the location of a facility to help prevent subsequent project delays.]

(c) *Salt dome formations, salt bed formations, underground mines and caves.* The placement of any noncontainerized or bulk liquid hazardous waste in any salt dome formation, salt bed formation, underground mine or cave is prohibited, except for the Department of Energy Waste Isolation Pilot Project in New Mexico.

[46 FR 2848, Jan. 12, 1981, as amended at 47 FR 32350, July 26, 1982; 48 FR 14294, Apr. 1, 1983; 48 FR 30115, June 30, 1983; 50 FR 4514, Jan. 31, 1985; 50 FR 28746, July 15, 1985; 52 FR 46963, Dec. 10, 1987; 71 FR 40272, July 14, 2006]

§ 264.19 Construction quality assurance program.

top

(a) *CQA program.* (1) A construction quality assurance (CQA) program is required for all surface impoundment, waste pile, and landfill units that are required to comply with §§264.221 (c) and (d), 264.251 (c) and (d), and 264.301 (c) and (d). The program must ensure that the constructed unit meets or exceeds all design criteria and specifications in the permit. The program must be developed and implemented under the direction of a CQA officer who is a registered professional engineer.

(2) The CQA program must address the following physical components, where applicable:

(i) Foundations;

(ii) Dikes;

(iii) Low-permeability soil liners;

(iv) Geomembranes (flexible membrane liners);

(v) Leachate collection and removal systems and leak detection systems; and

(vi) Final cover systems.

(b) *Written CQA plan.* The owner or operator of units subject to the CQA program under paragraph (a) of this section must develop and implement a written CQA plan. The plan must identify steps that will be used to monitor and document the quality of materials and the condition and manner of their installation. The CQA plan must include:

(1) Identification of applicable units, and a description of how they will be constructed.

(2) Identification of key personnel in the development and implementation of the CQA plan, and CQA officer qualifications.

(3) A description of inspection and sampling activities for all unit components identified in paragraph (a)(2) of this section, including observations and tests that will be used before, during,

and after construction to ensure that the construction materials and the installed unit components meet the design specifications. The description must cover: Sampling size and locations; frequency of testing; data evaluation procedures; acceptance and rejection criteria for construction materials; plans for implementing corrective measures; and data or other information to be recorded and retained in the operating record under §264.73.

(c) *Contents of program.* (1) The CQA program must include observations, inspections, tests, and measurements sufficient to ensure:

(i) Structural stability and integrity of all components of the unit identified in paragraph (a)(2) of this section;

(ii) Proper construction of all components of the liners, leachate collection and removal system, leak detection system, and final cover system, according to permit specifications and good engineering practices, and proper installation of all components (e.g., pipes) according to design specifications;

(iii) Conformity of all materials used with design and other material specifications under §§264.221, 264.251, and 264.301.

(2) The CQA program shall include test fills for compacted soil liners, using the same compaction methods as in the full scale unit, to ensure that the liners are constructed to meet the hydraulic conductivity requirements of §§264.221(c)(1)(i)(B), 264.251(c)(1)(i)(B), and 264.301(c)(1)(i)(B) in the field. Compliance with the hydraulic conductivity requirements must be verified by using in-situ testing on the constructed test fill. The Regional Administrator may accept an alternative demonstration, in lieu of a test fill, where data are sufficient to show that a constructed soil liner will meet the hydraulic conductivity requirements of §§264.221(c)(1)(i)(B), 264.251(c)(1)(i)(B), and 264.301(c)(1)(i)(B) in the field.

(d) *Certification.* Waste shall not be received in a unit subject to §264.19 until the owner or operator has submitted to the Regional Administrator by certified mail or hand delivery a certification signed by the CQA officer that the approved CQA plan has been successfully carried out and that the unit meets the requirements of §§264.221 (c) or (d), 264.251 (c) or (d), or 264.301 (c) or (d); and the procedure in §270.30(l)(2)(ii) of this chapter has been completed. Documentation supporting the CQA officer's certification must be furnished to the Regional Administrator upon request.

[57 FR 3486, Jan. 29, 1992]

Subpart C—Preparedness and Prevention

top

§ 264.30 Applicability.

top

The regulations in this subpart apply to owners and operators of all hazardous waste facilities, except as §264.1 provides otherwise.

§ 264.31 Design and operation of facility.

top

Facilities must be designed, constructed, maintained, and operated to minimize the possibility of a fire, explosion, or any unplanned sudden or non-sudden release of hazardous waste or hazardous waste constituents to air, soil, or surface water which could threaten human health or the environment.

§ 264.32 Required equipment.

top

All facilities must be equipped with the following, *unless* it can be demonstrated to the Regional Administrator that none of the hazards posed by waste handled at the facility could require a particular kind of equipment specified below:

(a) An internal communications or alarm system capable of providing immediate emergency instruction (voice or signal) to facility personnel;

(b) A device, such as a telephone (immediately available at the scene of operations) or a hand-held two-way radio, capable of summoning emergency assistance from local police departments, fire departments, or State or local emergency response teams;

(c) Portable fire extinguishers, fire control equipment (including special extinguishing equipment, such as that using foam, inert gas, or dry chemicals), spill control equipment, and decontamination equipment; and

(d) Water at adequate volume and pressure to supply water hose streams, or foam producing equipment, or automatic sprinklers, or water spray systems.

[*Comment:* Part 270 of this chapter requires that an owner or operator who wishes to make the demonstration referred to above must do so with part B of the permit application.]

[45 FR 33221, May 19, 1980, as amended at 48 FR 14294, Apr. 1, 1983]

§ 264.33 Testing and maintenance of equipment.

top

All facility communications or alarm systems, fire protection equipment, spill control equipment, and decontamination equipment, where required, must be tested and maintained as necessary to assure its proper operation in time of emergency.

§ 264.34 Access to communications or alarm system.

top

(a) Whenever hazardous waste is being poured, mixed, spread, or otherwise handled, all personnel involved in the operation must have immediate access to an internal alarm or emergency communication device, either directly or through visual or voice contact with another employee, *unless* the Regional Administrator has ruled that such a device is not required under §264.32.

(b) If there is ever just one employee on the premises while the facility is operating, he must have immediate access to a device, such as a telephone (immediately available at the scene of operation) or a hand-held two-way radio, capable of summoning external emergency assistance, *unless* the Regional Administrator has ruled that such a device is not required under §264.32.

§ 264.35 Required aisle space.

top

The owner or operator must maintain aisle space to allow the unobstructed movement of personnel, fire protection equipment, spill control equipment, and decontamination equipment to any area of facility operation in an emergency, *unless* it can be demonstrated to the Regional Administrator that aisle space is not needed for any of these purposes.

[*Comment:* Part 270 of this chapter requires that an owner or operator who wishes to make the demonstration referred to above must do so with part B of the permit application.]

[45 FR 33221, May 19, 1980, as amended at 48 FR 14294, Apr. 1, 1983]

§ 264.36 [Reserved]

top

§ 264.37 Arrangements with local authorities.

top

(a) The owner or operator must attempt to make the following arrangements, as appropriate for the type of waste handled at his facility and the potential need for the services of these organizations:

(1) Arrangements to familiarize police, fire departments, and emergency response teams with the layout of the facility, properties of hazardous waste handled at the facility and associated hazards, places where facility personnel would normally be working, entrances to and roads inside the facility, and possible evacuation routes;

(2) Where more than one police and fire department might respond to an emergency, agreements designating primary emergency authority to a specific police and a specific fire department, and agreements with any others to provide support to the primary emergency authority;

(3) Agreements with State emergency response teams, emergency response contractors, and equipment suppliers; and

(4) Arrangements to familiarize local hospitals with the properties of hazardous waste handled at the facility and the types of injuries or illnesses which could result from fires, explosions, or releases at the facility.

(b) Where State or local authorities decline to enter into such arrangements, the owner or operator must document the refusal in the operating record.

Subpart D—Contingency Plan and Emergency Procedures

top

§ 264.50 Applicability.

top

The regulations in this subpart apply to owners and operators of all hazardous waste facilities, except as §264.1 provides otherwise.

§ 264.51 Purpose and implementation of contingency plan.

top

(a) Each owner or operator must have a contingency plan for his facility. The contingency plan must be designed to minimize hazards to human health or the environment from fires, explosions, or any unplanned sudden or non-sudden release of hazardous waste or hazardous waste constituents to air, soil, or surface water.

(b) The provisions of the plan must be carried out immediately whenever there is a fire, explosion, or release of hazardous waste or hazardous waste constituents which could threaten human health or the environment.

[45 FR 33221, May 19, 1980, as amended at 50 FR 4514, Jan. 31, 1985]

§ 264.52 Content of contingency plan.

top

(a) The contingency plan must describe the actions facility personnel must take to comply with §§264.51 and 264.56 in response to fires, explosions, or any unplanned sudden or non-sudden

release of hazardous waste or hazardous waste constituents to air, soil, or surface water at the facility.

(b) If the owner or operator has already prepared a Spill Prevention, Control, and Countermeasures (SPCC) Plan in accordance with part 112 of this chapter, or part 1510 of chapter V, or some other emergency or contingency plan, he need only amend that plan to incorporate hazardous waste management provisions that are sufficient to comply with the requirements of this part. The owner or operator may develop one contingency plan which meets all regulatory requirements. EPA recommends that the plan be based on the National Response Team's Integrated Contingency Plan Guidance ("One Plan"). When modifications are made to non-RCRA provisions in an integrated contingency plan, the changes do not trigger the need for a RCRA permit modification.

(c) The plan must describe arrangements agreed to by local police departments, fire departments, hospitals, contractors, and State and local emergency response teams to coordinate emergency services, pursuant to §264.37.

(d) The plan must list names, addresses, and phone numbers (office and home) of all persons qualified to act as emergency coordinator (see §264.55), and this list must be kept up to date. Where more than one person is listed, one must be named as primary emergency coordinator and others must be listed in the order in which they will assume responsibility as alternates. *For new facilities,* this information must be supplied to the Regional Administrator at the time of certification, rather than at the time of permit application.

(e) The plan must include a list of all emergency equipment at the facility (such as fire extinguishing systems, spill control equipment, communications and alarm systems (internal and external), and decontamination equipment), where this equipment is required. This list must be kept up to date. In addition, the plan must include the location and a physical description of each item on the list, and a brief outline of its capabilities.

(f) The plan must include an evacuation plan for facility personnel where there is a possibility that evacuation could be necessary. This plan must describe signal(s) to be used to begin evacuation, evacuation routes, and alternate evacuation routes (in cases where the primary routes could be blocked by releases of hazardous waste or fires).

[45 FR 33221, May 19, 1980, as amended at 46 FR 27480, May 20, 1981; 50 FR 4514, Jan. 31, 1985; 71 FR 16903, Apr. 4, 2006]

§ 264.53 Copies of contingency plan.

top

A copy of the contingency plan and all revisions to the plan must be:

(a) Maintained at the facility; and

(b) Submitted to all local police departments, fire departments, hospitals, and State and local emergency response teams that may be called upon to provide emergency services.

[*Comment:* The contingency plan must be submitted to the Regional Administrator with Part B of the permit application under part 270, of this chapter and, after modification or approval, will become a condition of any permit issued.]

[45 FR 33221, May 19, 1980, as amended at 48 FR 30115, June 30, 1983; 50 FR 4514, Jan. 31, 1985]

§ 264.54 Amendment of contingency plan.

top

The contingency plan must be reviewed, and immediately amended, if necessary, whenever:

(a) The facility permit is revised;

(b) The plan fails in an emergency;

(c) The facility changes—in its design, construction, operation, maintenance, or other circumstances—in a way that materially increases the potential for fires, explosions, or releases of hazardous waste or hazardous waste constituents, or changes the response necessary in an emergency;

(d) The list of emergency coordinators changes; or

(e) The list of emergency equipment changes.

[45 FR 33221, May 19, 1980, as amended at 50 FR 4514, Jan. 31, 1985; 53 FR 37935, Sept. 28, 1988]

§ 264.55 Emergency coordinator.

top

At all times, there must be at least one employee either on the facility premises or on call (i.e., available to respond to an emergency by reaching the facility within a short period of time) with the responsibility for coordinating all emergency response measures. This emergency coordinator must be thoroughly familiar with all aspects of the facility's contingency plan, all operations and activities at the facility, the location and characteristics of waste handled, the location of all records within the facility, and the facility layout. In addition, this person must have the authority to commit the resources needed to carry out the contingency plan.

[*Comment:* The emergency coordinator's responsibilities are more fully spelled out in §264.56. Applicable responsibilities for the emergency coordinator vary, depending on factors such as type and variety of waste(s) handled by the facility, and type and complexity of the facility.]

§ 264.56 Emergency procedures.

top

(a) Whenever there is an imminent or actual emergency situation, the emergency coordinator (or his designee when the emergency coordinator is on call) must immediately:

(1) Activate internal facility alarms or communication systems, where applicable, to notify all facility personnel; and

(2) Notify appropriate State or local agencies with designated response roles if their help is needed.

(b) Whenever there is a release, fire, or explosion, the emergency coordinator must immediately identify the character, exact source, amount, and areal extent of any released materials. He may do this by observation or review of facility records or manifests, and, if necessary, by chemical analysis.

(c) Concurrently, the emergency coordinator must assess possible hazards to human health or the environment that may result from the release, fire, or explosion. This assessment must consider both direct and indirect effects of the release, fire, or explosion (e.g., the effects of any toxic, irritating, or asphyxiating gases that are generated, or the effects of any hazardous surface water run-off from water or chemical agents used to control fire and heat-induced explosions).

(d) If the emergency coordinator determines that the facility has had a release, fire, or explosion which could threaten human health, or the environment, outside the facility, he must report his findings as follows:

(1) If his assessment indicates that evacuation of local areas may be advisable, he must immediately notify appropriate local authorities. He must be available to help appropriate officials decide whether local areas should be evacuated; and

(2) He must immediately notify either the government official designated as the on-scene coordinator for that geographical area, (in the applicable regional contingency plan under part 1510 of this title) or the National Response Center (using their 24-hour toll free number 800/424–8802). The report must include:

(i) Name and telephone number of reporter;

(ii) Name and address of facility;

(iii) Time and type of incident (e.g., release, fire);

(iv) Name and quantity of material(s) involved, to the extent known;

(v) The extent of injuries, if any; and

(vi) The possible hazards to human health, or the environment, outside the facility.

(e) During an emergency, the emergency coordinator must take all reasonable measures necessary to ensure that fires, explosions, and releases do not occur, recur, or spread to other hazardous waste at the facility. These measures must include, where applicable, stopping processes and operations, collecting and containing release waste, and removing or isolating containers.

(f) If the facility stops operations in response to a fire, explosion, or release, the emergency coordinator must monitor for leaks, pressure buildup, gas generation, or ruptures in valves, pipes, or other equipment, wherever this is appropriate.

(g) Immediately after an emergency, the emergency coordinator must provide for treating, storing, or disposing of recovered waste, contaminated soil or surface water, or any other material that results from a release, fire, or explosion at the facility.

[*Comment:* Unless the owner or operator can demonstrate, in accordance with §261.3(c) or (d) of this chapter, that the recovered material is not a hazardous waste, the owner or operator becomes a generator of hazardous waste and must manage it in accordance with all applicable requirements of parts 262, 263, and 264 of this chapter.]

(h) The emergency coordinator must ensure that, in the affected area(s) of the facility:

(1) No waste that may be incompatible with the released material is treated, stored, or disposed of until cleanup procedures are completed; and

(2) All emergency equipment listed in the contingency plan is cleaned and fit for its intended use before operations are resumed.

(i) The owner or operator must note in the operating record the time, date, and details of any incident that requires implementing the contingency plan. Within 15 days after the incident, he must submit a written report on the incident to the Regional Administrator. The report must include:

(1) Name, address, and telephone number of the owner or operator;

(2) Name, address, and telephone number of the facility;

(3) Date, time, and type of incident (e.g., fire, explosion);

(4) Name and quantity of material(s) involved;

(5) The extent of injuries, if any;

(6) An assessment of actual or potential hazards to human health or the environment, where this is applicable; and

(7) Estimated quantity and disposition of recovered material that resulted from the incident.

[45 FR 33221, May 19, 1980, as amended at 50 FR 4514, Jan. 31, 1985; 71 FR 16903, Apr. 4, 2006]

Subpart E—Manifest System, Recordkeeping, and Reporting

top

§ 264.70 Applicability.

top

(a) The regulations in this subpart apply to owners and operators of both on-site and off-site facilities, except as §264.1 provides otherwise. Sections 264.71, 264.72, and 264.76 do not apply to owners and operators of on-site facilities that do not receive any hazardous waste from off-site sources, nor to owners and operators of off-site facilities with respect to waste military munitions exempted from manifest requirements under 40 CFR 266.203(a). Section 264.73(b) only applies to permittees who treat, store, or dispose of hazardous wastes on-site where such wastes were generated.

(b) The revised Manifest form and procedures in 40 CFR 260.10, 261.7, 264.70, 264.71. 264.72, and 264.76, shall not apply until September 5, 2006. The Manifest form and procedures in 40 CFR 260.10, 261.7, 264.70, 264.71. 264.72, and 264.76, contained in the 40 CFR, parts 260 to 265, edition revised as of July 1, 2004, shall be applicable until September 5, 2006.

[70 FR 10821, Mar. 4, 2005]

§ 264.71 Use of manifest system.

top

(a)(1) If a facility receives hazardous waste accompanied by a manifest, the owner, operator or his/her agent must sign and date the manifest as indicated in paragraph (a)(2) of this section to certify that the hazardous waste covered by the manifest was received, that the hazardous waste was received except as noted in the discrepancy space of the manifest, or that the hazardous waste was rejected as noted in the manifest discrepancy space.

(2) If a facility receives a hazardous waste shipment accompanied by a manifest, the owner, operator or his agent must:

(i) Sign and date, by hand, each copy of the manifest;

(ii) Note any discrepancies (as defined in §264.72(a)) on each copy of the manifest;

(iii) Immediately give the transporter at least one copy of the manifest;

(iv) Within 30 days of delivery, send a copy of the manifest to the generator; and

(v) Retain at the facility a copy of each manifest for at least three years from the date of delivery.

(3) If a facility receives hazardous waste imported from a foreign source, the receiving facility must mail a copy of the manifest to the following address within 30 days of delivery: International Compliance Assurance Division, OFA/OECA (2254A), U.S. Environmental Protection Agency, Ariel Rios Building, 1200 Pennsylvania Avenue, NW., Washington, DC 20460.

(b) If a facility receives, from a rail or water (bulk shipment) transporter, hazardous waste which is accompanied by a shipping paper containing all the information required on the manifest (excluding the EPA identification numbers, generator's certification, and signatures), the owner or operator, or his agent, must:

(1) Sign and date each copy of the manifest or shipping paper (if the manifest has not been received) to certify that the hazardous waste covered by the manifest or shipping paper was received;

(2) Note any significant discrepancies (as defined in §264.72(a)) in the manifest or shipping paper (if the manifest has not been received) on each copy of the manifest or shipping paper.

[*Comment:* The Agency does not intend that the owner or operator of a facility whose procedures under §264.13(c) include waste analysis must perform that analysis before signing the shipping paper and giving it to the transporter. Section 264.72(b), however, requires reporting an unreconciled discrepancy discovered during later analysis.]

(3) Immediately give the rail or water (bulk shipment) transporter at least one copy of the manifest or shipping paper (if the manifest has not been received);

(4) Within 30 days after the delivery, send a copy of the signed and dated manifest or a signed and dated copy of the shipping paper (if the manifest has not been received within 30 days after delivery) to the generator; and

[*Comment:* Section 262.23(c) of this chapter requires the generator to send three copies of the manifest to the facility when hazardous waste is sent by rail or water (bulk shipment).]

(5) Retain at the facility a copy of the manifest and shipping paper (if signed in lieu of the manifest at the time of delivery) for at least three years from the date of delivery.

(c) Whenever a shipment of hazardous waste is initiated from a facility, the owner or operator of that facility must comply with the requirements of part 262 of this chapter.

[*Comment:* The provisions of §262.34 are applicable to the on-site accumulation of hazardous wastes by generators. Therefore, the provisions of §262.34 only apply to owners or operators who are shipping hazardous waste which they generated at that facility.]

(d) Within three working days of the receipt of a shipment subject to 40 CFR part 262, subpart H, the owner or operator of the facility must provide a copy of the tracking document bearing all required signatures to the notifier, to the Office of Enforcement and Compliance Assurance, Office of Compliance, Enforcement Planning, Targeting and Data Division (2222A),

Environmental Protection Agency, 1200 Pennsylvania Ave., NW., Washington, DC 20460, and to competent authorities of all other concerned countries. The original copy of the tracking document must be maintained at the facility for at least three years from the date of signature.

(e) A facility must determine whether the consignment state for a shipment regulates any additional wastes (beyond those regulated Federally) as hazardous wastes under its state hazardous waste program. Facilities must also determine whether the consignment state or generator state requires the facility to submit any copies of the manifest to these states.

[45 FR 33221, May 19, 1980, as amended at 45 FR 86970, 86974, Dec. 31, 1980; 61 FR 16315, Apr. 12, 1996; 70 FR 10821, Mar. 4, 2005]

§ 264.72 Manifest discrepancies.

top

(a) Manifest discrepancies are:

(1) Significant differences (as defined by paragraph (b) of this section) between the quantity or type of hazardous waste designated on the manifest or shipping paper, and the quantity and type of hazardous waste a facility actually receives;

(2) Rejected wastes, which may be a full or partial shipment of hazardous waste that the TSDF cannot accept; or

(3) Container residues, which are residues that exceed the quantity limits for “empty” containers set forth in 40 CFR 261.7(b).

(b) Significant differences in quantity are: For bulk waste, variations greater than 10 percent in weight; for batch waste, any variation in piece count, such as a discrepancy of one drum in a truckload. Significant differences in type are obvious differences which can be discovered by inspection or waste analysis, such as waste solvent substituted for waste acid, or toxic constituents not reported on the manifest or shipping paper.

(c) Upon discovering a significant difference in quantity or type, the owner or operator must attempt to reconcile the discrepancy with the waste generator or transporter (*e.g.,* with telephone conversations). If the discrepancy is not resolved within 15 days after receiving the waste, the owner or operator must immediately submit to the Regional Administrator a letter describing the discrepancy and attempts to reconcile it, and a copy of the manifest or shipping paper at issue.

(d)(1) Upon rejecting waste or identifying a container residue that exceeds the quantity limits for “empty” containers set forth in 40 CFR 261.7(b), the facility must consult with the generator prior to forwarding the waste to another facility that can manage the waste. If it is impossible to locate an alternative facility that can receive the waste, the facility may return the rejected waste or residue to the generator. The facility must send the waste to the alternative facility or to the generator within 60 days of the rejection or the container residue identification.

(2) While the facility is making arrangements for forwarding rejected wastes or residues to another facility under this section, it must ensure that either the delivering transporter retains custody of the waste, or, the facility must provide for secure, temporary custody of the waste, pending delivery of the waste to the first transporter designated on the manifest prepared under paragraph (e) or (f) of this section.

(e) Except as provided in paragraph (e)(7) of this section, for full or partial load rejections and residues that are to be sent off-site to an alternate facility, the facility is required to prepare a new manifest in accordance with §262.20(a) of this chapter and the following instructions:

(1) Write the generator's U.S. EPA ID number in Item 1 of the new manifest. Write the generator's name and mailing address in Item 5 of the new manifest. If the mailing address is different from the generator's site address, then write the generator's site address in the designated space for Item 5.

(2) Write the name of the alternate designated facility and the facility's U.S. EPA ID number in the designated facility block (Item 8) of the new manifest.

(3) Copy the manifest tracking number found in Item 4 of the old manifest to the Special Handling and Additional Information Block of the new manifest, and indicate that the shipment is a residue or rejected waste from the previous shipment.

(4) Copy the manifest tracking number found in Item 4 of the new manifest to the manifest reference number line in the Discrepancy Block of the old manifest (Item 18a).

(5) Write the DOT description for the rejected load or the residue in Item 9 (U.S. DOT Description) of the new manifest and write the container types, quantity, and volume(s) of waste.

(6) Sign the Generator's/Offeror's Certification to certify, as the offeror of the shipment, that the waste has been properly packaged, marked and labeled and is in proper condition for transportation.

(7) For full load rejections that are made while the transporter remains present at the facility, the facility may forward the rejected shipment to the alternate facility by completing Item 18b of the original manifest and supplying the information on the next destination facility in the Alternate Facility space. The facility must retain a copy of this manifest for its records, and then give the remaining copies of the manifest to the transporter to accompany the shipment. If the original manifest is not used, then the facility must use a new manifest and comply with paragraphs (e)(1), (2), (3), (4), (5), and (6) of this section.

(f) Except as provided in paragraph (f)(7) of this section, for rejected wastes and residues that must be sent back to the generator, the facility is required to prepare a new manifest in accordance with §262.20(a) of this chapter and the following instructions:

(1) Write the facility's U.S. EPA ID number in Item 1 of the new manifest. Write the generator's name and mailing address in Item 5 of the new manifest. If the mailing address is different from

the generator's site address, then write the generator's site address in the designated space for Item 5.

(2) Write the name of the initial generator and the generator's U.S. EPA ID number in the designated facility block (Item 8) of the new manifest.

(3) Copy the manifest tracking number found in Item 4 of the old manifest to the Special Handling and Additional Information Block of the new manifest, and indicate that the shipment is a residue or rejected waste from the previous shipment.

(4) Copy the manifest tracking number found in Item 4 of the new manifest to the manifest reference number line in the Discrepancy Block of the old manifest (Item 18a).

(5) Write the DOT description for the rejected load or the residue in Item 9 (U.S. DOT Description) of the new manifest and write the container types, quantity, and volume(s) of waste.

(6) Sign the Generator's/Offeror's Certification to certify, as offeror of the shipment, that the waste has been properly packaged, marked and labeled and is in proper condition for transportation.

(7) For full load rejections that are made while the transporter remains at the facility, the facility may return the shipment to the generator with the original manifest by completing Item 18a and 18b of the manifest and supplying the generator's information in the Alternate Facility space. The facility must retain a copy for its records and then give the remaining copies of the manifest to the transporter to accompany the shipment. If the original manifest is not used, then the facility must use a new manifest and comply with paragraphs (f)(1), (2), (3), (4), (5), and (6) of this section.

(g) If a facility rejects a waste or identifies a container residue that exceeds the quantity limits for “empty” containers set forth in 40 CFR 261.7(b) after it has signed, dated, and returned a copy of the manifest to the delivering transporter or to the generator, the facility must amend its copy of the manifest to indicate the rejected wastes or residues in the discrepancy space of the amended manifest. The facility must also copy the manifest tracking number from Item 4 of the new manifest to the Discrepancy space of the amended manifest, and must re-sign and date the manifest to certify to the information as amended. The facility must retain the amended manifest for at least three years from the date of amendment, and must within 30 days, send a copy of the amended manifest to the transporter and generator that received copies prior to their being amended.

[70 FR 10822, Mar. 4, 2005, as amended at 70 FR 35041, June 16, 2005]

§ 264.73 Operating record.

top

(a) The owner or operator must keep a written operating record at his facility.

(b) The following information must be recorded, as it becomes available, and maintained in the operating record for three years unless noted as follows:

(1) A description and the quantity of each hazardous waste received, and the method(s) and date(s) of its treatment, storage, or disposal at the facility as required by appendix I of this part. This information must be maintained in the operating record until closure of the facility;

(2) The location of each hazardous waste within the facility and the quantity at each location. For disposal facilities, the location and quantity of each hazardous waste must be recorded on a map or diagram that shows each cell or disposal area. For all facilities, this information must include cross-references to manifest document numbers if the waste was accompanied by a manifest. This information must be maintained in the operating record until closure of the facility.

[*Comment:* See §264.119 for related requirements.]

(3) Records and results of waste analyses and waste determinations performed as specified in §§264.13, 264.17, 264.314, 264.341, 264.1034, 264.1063, 264.1083, 268.4(a), and 268.7 of this chapter.

(4) Summary reports and details of all incidents that require implementing the contingency plan as specified in §264.56(j);

(5) Records and results of inspections as required by §264.15(d) (except these data need be kept only three years);

(6) Monitoring, testing or analytical data, and corrective action where required by subpart F of this part and §§264.19, 264.191, 264.193, 264.195, 264.222, 264.223, 264.226, 264.252–264.254, 264.276, 264.278, 264.280, 264.302–264.304, 264.309, 264.602, 264.1034(c)–264.1034(f), 264.1035, 264.1063(d)–264.1063(i), 264.1064, and 264.1082 through 264.1090 of this part. Maintain in the operating record for three years, except for records and results pertaining to ground-water monitoring and cleanup which must be maintained in the operating record until closure of the facility.

(7) For off-site facilities, notices to generators as specified in §264.12(b); and

(8) All closure cost estimates under §264.142, and for disposal facilities, all post-closure cost estimates under §264.144 of this part. This information must be maintained in the operating record until closure of the facility.

(9) A certification by the permittee no less often than annually, that the permittee has a program in place to reduce the volume and toxicity of hazardous waste that he generates to the degree determined by the permittee to be economically practicable; and the proposed method of treatment, storage or disposal is that practicable method currently available to the permittee which minimizes the present and future threat to human health and the environment.

(10) Records of the quantities and date of placement for each shipment of hazardous waste placed in land disposal units under an extension to the effective date of any land disposal restriction granted pursuant to §268.5 of this chapter, a petition pursuant to §268.6 of this chapter, or a certification under §268.8 of this chapter, and the applicable notice required by a generator under §268.7(a) of this chapter. This information must be maintained in the operating record until closure of the facility.

(11) For an off-site treatment facility, a copy of the notice, and the certification and demonstration, if applicable, required by the generator or the owner or operator under §268.7 or §268.8;

(12) For an on-site treatment facility, the information contained in the notice (except the manifest number), and the certification and demonstration if applicable, required by the generator or the owner or operator under §268.7 or §268.8;

(13) For an off-site land disposal facility, a copy of the notice, and the certification and demonstration if applicable, required by the generator or the owner or operator of a treatment facility under §§268.7 and 268.8, whichever is applicable; and

(14) For an on-site land disposal facility, the information contained in the notice required by the generator or owner or operator of a treatment facility under §268.7, except for the manifest number, and the certification and demonstration if applicable, required under §268.8, whichever is applicable.

(15) For an off-site storage facility, a copy of the notice, and the certification and demonstration if applicable, required by the generator or the owner or operator under §268.7 or §268.8; and

(16) For an on-site storage facility, the information contained in the notice (except the manifest number), and the certification and demonstration if applicable, required by the generator or the owner or operator under §268.7 or §268.8.

(17) Any records required under §264.1(j)(13).

(18) Monitoring, testing or analytical data where required by §264.347 must be maintained in the operating record for five years.

(19) Certifications as required by §264.196(f) must be maintained in the operating record until closure of the facility.

[45 FR 33221, May 19, 1980]

Editorial Note: ForFederal Registercitations affecting §264.73, see the List of CFR Sections Affected, which appears in the Finding Aids section of the printed volume and on GPO Access.

§ 264.74 Availability, retention, and disposition of records.

top

(a) All records, including plans, required under this part must be furnished upon request, and made available at all reasonable times for inspection, by any officer, employee, or representative of EPA who is duly designated by the Administrator.

(b) The retention period for all records required under this part is extended automatically during the course of any unresolved enforcement action regarding the facility or as requested by the Administrator.

(c) A copy of records of waste disposal locations and quantities under §264.73(b)(2) must be submitted to the Regional Administrator and local land authority upon closure of the facility.

§ 264.75 Biennial report.

top

The owner or operator must prepare and submit a single copy of a biennial report to the Regional Administrator by March 1 of each even numbered year. The biennial report must be submitted on EPA form 8700–13B. The report must cover facility activities during the previous calendar year and must include:

(a) The EPA identification number, name, and address of the facility;

(b) The calendar year covered by the report;

(c) For off-site facilities, the EPA identification number of each hazardous waste generator from which the facility received a hazardous waste during the year; for imported shipments, the report must give the name and address of the foreign generator;

(d) A description and the quantity of each hazardous waste the facility received during the year. For off-site facilities, this information must be listed by EPA identification number of each generator;

(e) The method of treatment, storage, or disposal for each hazardous waste;

(f) [Reserved]

(g) The most recent closure cost estimate under §264.142, and, for disposal facilities, the most recent post-closure cost estimate under §264.144; and

(h) For generators who treat, store, or dispose of hazardous waste on-site, a description of the efforts undertaken during the year to reduce the volume and toxicity of waste generated.

(i) For generators who treat, store, or dispose of hazardous waste on-site, a description of the changes in volume and toxicity of waste actually achieved during the year in comparison to previous years to the extent such information is available for the years prior to 1984.

(j) The certification signed by the owner or operator of the facility or his authorized representative.

[45 FR 33221, May 19, 1980, as amended at 46 FR 2849, Jan. 12, 1981; 48 FR 3982, Jan. 28, 1983; 50 FR 4514, Jan. 31, 1985; 51 FR 28556, Aug. 8, 1986]

§ 264.76 Unmanifested waste report.

top

(a) If a facility accepts for treatment, storage, or disposal any hazardous waste from an off-site source without an accompanying manifest, or without an accompanying shipping paper as described by §263.20(e) of this chapter, and if the waste is not excluded from the manifest requirement by this chapter, then the owner or operator must prepare and submit a letter to the Regional Administrator within 15 days after receiving the waste. The unmanifested waste report must contain the following information:

(1) The EPA identification number, name and address of the facility;

(2) The date the facility received the waste;

(3) The EPA identification number, name and address of the generator and the transporter, if available;

(4) A description and the quantity of each unmanifested hazardous waste the facility received;

(5) The method of treatment, storage, or disposal for each hazardous waste;

(6) The certification signed by the owner or operator of the facility or his authorized representative; and,

(7) A brief explanation of why the waste was unmanifested, if known.

(b) [Reserved]

[70 FR 10823, Mar. 4, 2005]

§ 264.77 Additional reports.

top

In addition to submitting the biennial reports and unmanifested waste reports described in §§264.75 and 264.76, the owner or operator must also report to the Regional Administrator:

(a) Releases, fires, and explosions as specified in §264.56(j);

(b) Facility closures specified in §264.115; and

(c) As otherwise required by subparts F, K through N, AA, BB, and CC of this part.

[46 FR 2849, Jan. 12, 1981, as amended at 47 FR 32350, July 26, 1982; 48 FR 3982, Jan. 28, 1983; 55 FR 25494, June 21, 1990; 59 FR 62926, Dec. 6, 1994]

Subpart G—Closure and Post-Closure

top

Source: 51 FR 16444, May 2, 1986, unless otherwise noted.

§ 264.110 Applicability.

top

Except as §264.1 provides otherwise:

(a) Sections 264.111 through 264.115 (which concern closure) apply to the owners and operators of all hazardous waste management facilities; and

(b) Sections 264.116 through 264.120 (which concern post-closure care) apply to the owners and operators of:

(1) All hazardous waste disposal facilities;

(2) Waste piles and surface impoundments from which the owner or operator intends to remove the wastes at closure to the extent that these sections are made applicable to such facilities in §264.228 or §264.258;

(3) Tank systems that are required under §264.197 to meet the requirements for landfills; and

(4) Containment buildings that are required under §264.1102 to meet the requirement for landfills.

(c) The Regional Administrator may replace all or part of the requirements of this subpart (and the unit-specific standards referenced in §264.111(c) applying to a regulated unit), with alternative requirements set out in a permit or in an enforceable document (as defined in 40 CFR 270.1(c)(7)), where the Regional Administrator determines that:

(1) The regulated unit is situated among solid waste management units (or areas of concern), a release has occurred, and both the regulated unit and one or more solid waste management unit(s) (or areas of concern) are likely to have contributed to the release; and

(2) It is not necessary to apply the closure requirements of this subpart (and those referenced herein) because the alternative requirements will protect human health and the environment and will satisfy the closure performance standard of §264.111 (a) and (b).

[51 FR 16444, May 2, 1986, as amended at 51 FR 25472, July 14, 1986; 57 FR 37264, Aug. 18, 1992; 63 FR 56733, Oct. 22, 1998]

§ 264.111 Closure performance standard.

top

The owner or operator must close the facility in a manner that:

(a) Minimizes the need for further maintenance; and

(b) Controls, minimizes or eliminates, to the extent necessary to protect human health and the environment, post-closure escape of hazardous waste, hazardous constituents, leachate, contaminated run-off, or hazardous waste decomposition products to the ground or surface waters or to the atmosphere; and

(c) Complies with the closure requirements of this part, including, but not limited to, the requirements of §§264.178, 264.197, 264.228, 264.258, 264.280, 264.310, 264.351, 264.601 through 264.603, and 264.1102.

[51 FR 16444, May 2, 1986, as amended at 52 FR 46963, Dec. 10, 1987; 57 FR 37265, Aug. 18, 1992; 71 FR 40272, July 14, 2006]

§ 264.112 Closure plan; amendment of plan.

top

(a) *Written plan.* (1) The owner or operator of a hazardous waste management facility must have a written closure plan. In addition, certain surface impoundments and waste piles from which the owner or operator intends to remove or decontaminate the hazardous waste at partial or final closure are required by §§264.228(c)(1)(i) and 264.258(c)(1)(i) to have contingent closure plans. The plan must be submitted with the permit application, in accordance with §270.14(b)(13) of this chapter, and approved by the Regional Administrator as part of the permit issuance procedures under part 124 of this chapter. In accordance with §270.32 of this chapter, the approved closure plan will become a condition of any RCRA permit.

(2) The Director's approval of the plan must ensure that the approved closure plan is consistent with §§264.111 through 264.115 and the applicable requirements of subpart F of this part,

§§264.178, 264.197, 264.228, 264.258, 264.280, 264.310, 264.351, 264.601, and 264.1102. Until final closure is completed and certified in accordance with §264.115, a copy of the approved plan and all approved revisions must be furnished to the Director upon request, including requests by mail.

(b) *Content of plan.* The plan must identify steps necessary to perform partial and/or final closure of the facility at any point during its active life. The closure plan must include, at least:

(1) A description of how each hazardous waste management unit at the facility will be closed in accordance with §264.111;

(2) A description of how final closure of the facility will be conducted in accordance with §264.111. The description must identify the maximum extent of the operations which will be unclosed during the active life of the facility; and

(3) An estimate of the maximum inventory of hazardous wastes ever on-site over the active life of the facility and a detailed description of the methods to be used during partial closures and final closure, including, but not limited to, methods for removing, transporting, treating, storing, or disposing of all hazardous wastes, and identification of the type(s) of the off-site hazardous waste management units to be used, if applicable; and

(4) A detailed description of the steps needed to remove or decontaminate all hazardous waste residues and contaminated containment system components, equipment, structures, and soils during partial and final closure, including, but not limited to, procedures for cleaning equipment and removing contaminated soils, methods for sampling and testing surrounding soils, and criteria for determining the extent of decontamination required to satisfy the closure performance standard; and

(5) A detailed description of other activities necessary during the closure period to ensure that all partial closures and final closure satisfy the closure performance standards, including, but not limited to, ground-water monitoring, leachate collection, and run-on and run-off control; and

(6) A schedule for closure of each hazardous waste management unit and for final closure of the facility. The schedule must include, at a minimum, the total time required to close each hazardous waste management unit and the time required for intervening closure activities which will allow tracking of the progress of partial and final closure. (For example, in the case of a landfill unit, estimates of the time required to treat or dispose of all hazardous waste inventory and of the time required to place a final cover must be included.)

(7) For facilities that use trust funds to establish financial assurance under §264.143 or §264.145 and that are expected to close prior to the expiration of the permit, an estimate of the expected year of final closure.

(8) For facilities where the Regional Administrator has applied alternative requirements at a regulated unit under §§264.90(f), 264.110(c), and/or §264.140(d), either the alternative

requirements applying to the regulated unit, or a reference to the enforceable document containing those alternative requirements.

(c) *Amendment of plan.* The owner or operator must submit a written notification of or request for a permit modification to authorize a change in operating plans, facility design, or the approved closure plan in accordance with the applicable procedures in parts 124 and 270. The written notification or request must include a copy of the amended closure plan for review or approval by the Regional Administrator.

(1) The owner or operator may submit a written notification or request to the Regional Administrator for a permit modification to amend the closure plan at any time prior to the notification of partial or final closure of the facility.

(2) The owner or operator must submit a written notification of or request for a permit modification to authorize a change in the approved closure plan whenever:

(i) Changes in operating plans or facility design affect the closure plan, or

(ii) There is a change in the expected year of closure, if applicable, or

(iii) In conducting partial or final closure activities, unexpected events require a modification of the approved closure plan.

(iv) The owner or operator requests the Regional Administrator to apply alternative requirements to a regulated unit under §§264.90(f), 264.110(c), and/or §264.140(d).

(3) The owner or operator must submit a written request for a permit modification including a copy of the amended closure plan for approval at least 60 days prior to the proposed change in facility design or operation, or no later than 60 days after an unexpected event has occurred which has affected the closure plan. If an unexpected event occurs during the partial or final closure period, the owner or operator must request a permit modification no later than 30 days after the unexpected event. An owner or operator of a surface impoundment or waste pile that intends to remove all hazardous waste at closure and is not otherwise required to prepare a contingent closure plan under §264.228(c)(1)(i) or §264.258(c)(1)(i), must submit an amended closure plan to the Regional Administrator no later than 60 days from the date that the owner or operator or Regional Administrator determines that the hazardous waste management unit must be closed as a landfill, subject to the requirements of §264.310, or no later than 30 days from that date if the determination is made during partial or final closure. The Regional Administrator will approve, disapprove, or modify this amended plan in accordance with the procedures in parts 124 and 270. In accordance with §270.32 of this chapter, the approved closure plan will become a condition of any RCRA permit issued.

(4) The Regional Administrator may request modifications to the plan under the conditions described in §264.112(c)(2). The owner or operator must submit the modified plan within 60 days of the Regional Administrator's request, or within 30 days if the change in facility

conditions occurs during partial or final closure. Any modifications requested by the Regional Administrator will be approved in accordance with the procedures in parts 124 and 270.

(d) *Notification of partial closure and final closure.* (1) The owner or operator must notify the Regional Administrator in writing at least 60 days prior to the date on which he expects to begin closure of a surface impoundment, waste pile, land treatment or landfill unit, or final closure of a facility with such a unit. The owner or operator must notify the Regional Administrator in writing at least 45 days prior to the date on which he expects to begin final closure of a facility with only treatment or storage tanks, container storage, or incinerator units to be closed. The owner or operator must notify the Regional Administrator in writing at least 45 days prior to the date on which he expects to begin partial or final closure of a boiler or industrial furnace, whichever is earlier.

(2) The date when he "expects to begin closure" must be either:

(i) No later than 30 days after the date on which any hazardous waste management unit receives the known final volume of hazardous wastes, or if there is a reasonable possibility that the hazardous waste management unit will receive additional hazardous wastes, no later than one year after the date on which the unit received the most recent volume of hazardous wastes. If the owner or operator of a hazardous waste management unit can demonstrate to the Regional Administrator that the hazardous waste management unit or facility has the capacity to receive additional hazardous wastes and he has taken all steps to prevent threats to human health and the environment, including compliance with all applicable permit requirements, the Regional Administrator may approve an extension to this one-year limit; or

(ii) For units meeting the requirements of §264.113(d), no later than 30 days after the date on which the hazardous waste management unit receives the known final volume of non-hazardous wastes, or if there is a reasonable possibility that the hazardous waste management unit will receive additional non-hazardous wastes, no later than one year after the date on which the unit received the most recent volume of non-hazardous wastes. If the owner or operator can demonstrate to the Regional Administrator that the hazardous waste management unit has the capacity to receive additional non-hazardous wastes and he has taken, and will continue to take, all steps to prevent threats to human health and the environment, including compliance with all applicable permit requirements, the Regional Administrator may approve an extension to this one-year limit.

(3) If the facility's permit is terminated, or if the facility is otherwise ordered, by judicial decree or final order under section 3008 of RCRA, to cease receiving hazardous wastes or to close, then the requirements of this paragraph do not apply. However, the owner or operator must close the facility in accordance with the deadlines established in §264.113.

(e) *Removal of wastes and decontamination or dismantling of equipment.* Nothing in this section shall preclude the owner or operator from removing hazardous wastes and decontaminating or dismantling equipment in accordance with the approved partial or final closure plan at any time before or after notification of partial or final closure.

[51 FR 16444, May 2, 1986, as amended at 52 FR 46963, Dec. 10, 1987; 53 FR 37935, Sept. 28, 1988; 54 FR 33394, Aug. 14, 1989; 56 FR 7207, Feb. 21, 1991; 57 FR 37265, Aug. 18, 1992; 63 FR 56733, Oct. 22, 1998; 71 FR 40272, July 14, 2006]

§ 264.113 Closure; time allowed for closure.

top

(a) Within 90 days after receiving the final volume of hazardous wastes, or the final volume of non-hazardous wastes if the owner or operator complies with all applicable requirements in paragraphs (d) and (e) of this section, at a hazardous waste management unit or facility, the owner or operator must treat, remove from the unit or facility, or dispose of on-site, all hazardous wastes in accordance with the approved closure plan. The Regional Administrator may approve a longer period if the owner or operator complies with all applicable requirements for requesting a modification to the permit and demonstrates that:

(1)(i) The activities required to comply with this paragraph will, of necessity, take longer than 90 days to complete; or

(ii)(A) The hazardous waste management unit or facility has the capacity to receive additional hazardous wastes, or has the capacity to receive non-hazardous wastes if the owner or operator complies with paragraphs (d) and (e) of this section; and

(B) There is a reasonable likelihood that he or another person will recommence operation of the hazardous waste management unit or the facility within one year; and

(C) Closure of the hazardous waste management unit or facility would be incompatible with continued operation of the site; and

(2) He has taken and will continue to take all steps to prevent threats to human health and the environment, including compliance with all applicable permit requirements.

(b) The owner or operator must complete partial and final closure activities in accordance with the approved closure plan and within 180 days after receiving the final volume of hazardous wastes, or the final volume of non-hazardous wastes if the owner or operator complies with all applicable requirements in paragraphs (d) and (e) of this section, at the hazardous waste management unit or facility. The Regional Administrator may approve an extension to the closure period if the owner or operator complies with all applicable requirements for requesting a modification to the permit and demonstrates that:

(1)(i) The partial or final closure activities will, of necessity, take longer than 180 days to complete; or

(ii)(A) The hazardous waste management unit or facility has the capacity to receive additional hazardous wastes, or has the capacity to receive non-hazardous wastes if the owner or operator complies with paragraphs (d) and (e) of this section; and

(B) There is reasonable likelihood that he or another person will recommence operation of the hazardous waste management unit or the facility within one year; and

(C) Closure of the hazardous waste management unit or facility would be incompatible with continued operation of the site; and

(2) He has taken and will continue to take all steps to prevent threats to human health and the environment from the unclosed but not operating hazardous waste management unit or facility, including compliance with all applicable permit requirements.

(c) The demonstrations referred to in paragraphs (a)(1) and (b)(1) of this section must be made as follows:

(1) The demonstrations in paragraph (a)(1) of this section must be made at least 30 days prior to the expiration of the 90-day period in paragraph (a) of this section; and

(2) The demonstration in paragraph (b)(1) of this section must be made at least 30 days prior to the expiration of the 180-day period in paragraph (b) of this section, unless the owner or operator is otherwise subject to the deadlines in paragraph (d) of this section.

(d) The Regional Administrator may allow an owner or operator to receive only non-hazardous wastes in a landfill, land treatment, or surface impoundment unit after the final receipt of hazardous wastes at that unit if:

(1) The owner or operator requests a permit modification in compliance with all applicable requirements in parts 270 and 124 of this title and in the permit modification request demonstrates that:

(i) The unit has the existing design capacity as indicated on the part A application to receive non-hazardous wastes; and

(ii) There is a reasonable likelihood that the owner or operator or another person will receive non-hazardous wastes in the unit within one year after the final receipt of hazardous wastes; and

(iii) The non-hazardous wastes will not be incompatible with any remaining wastes in the unit, or with the facility design and operating requirements of the unit or facility under this part; and

(iv) Closure of the hazardous waste management unit would be incompatible with continued operation of the unit or facility; and

(v) The owner or operator is operating and will continue to operate in compliance with all applicable permit requirements; and

(2) The request to modify the permit includes an amended waste analysis plan, ground-water monitoring and response program, human exposure assessment required under RCRA section 3019, and closure and post-closure plans, and updated cost estimates and demonstrations of

financial assurance for closure and post-closure care as necessary and appropriate, to reflect any changes due to the presence of hazardous constituents in the non-hazardous wastes, and changes in closure activities, including the expected year of closure if applicable under §264.112(b)(7), as a result of the receipt of non-hazardous wastes following the final receipt of hazardous wastes; and

(3) The request to modify the permit includes revisions, as necessary and appropriate, to affected conditions of the permit to account for the receipt of non-hazardous wastes following receipt of the final volume of hazardous wastes; and

(4) The request to modify the permit and the demonstrations referred to in paragraphs (d)(1) and (d)(2) of this section are submitted to the Regional Administrator no later than 120 days prior to the date on which the owner or operator of the facility receives the known final volume of hazardous wastes at the unit, or no later than 90 days after the effective date of this rule in the state in which the unit is located, whichever is later.

(e) In addition to the requirements in paragraph (d) of this section, an owner or operator of a hazardous waste surface impoundment that is not in compliance with the liner and leachate collection system requirements in 42 U.S.C. 3004(o)(1) and 3005(j)(1) or 42 U.S.C. 3004(o) (2) or (3) or 3005(j) (2), (3), (4) or (13) must:

(1) Submit with the request to modify the permit:

(i) A contingent corrective measures plan, unless a corrective action plan has already been submitted under §264.99; and

(ii) A plan for removing hazardous wastes in compliance with paragraph (e)(2) of this section; and

(2) Remove all hazardous wastes from the unit by removing all hazardous liquids, and removing all hazardous sludges to the extent practicable without impairing the integrity of the liner(s), if any.

(3) Removal of hazardous wastes must be completed no later than 90 days after the final receipt of hazardous wastes. The Regional Administrator may approve an extension to this deadline if the owner or operator demonstrates that the removal of hazardous wastes will, of necessity, take longer than the allotted period to complete and that an extension will not pose a threat to human health and the environment.

(4) If a release that is a statistically significant increase (or decrease in the case of pH) over background values for detection monitoring parameters or constituents specified in the permit or that exceeds the facility's ground-water protection standard at the point of compliance, if applicable, is detected in accordance with the requirements in subpart F of this part, the owner or operator of the unit:

(i) Must implement corrective measures in accordance with the approved contingent corrective measures plan required by paragraph (e)(1) of this section no later than one year after detection of the release, or approval of the contingent corrective measures plan, whichever is later;

(ii) May continue to receive wastes at the unit following detection of the release only if the approved corrective measures plan includes a demonstration that continued receipt of wastes will not impede corrective action; and

(iii) May be required by the Regional Administrator to implement corrective measures in less than one year or to cease the receipt of wastes until corrective measures have been implemented if necessary to protect human health and the environment.

(5) During the period of corrective action, the owner or operator shall provide annual reports to the Regional Administrator describing the progress of the corrective action program, compile all ground-water monitoring data, and evaluate the effect of the continued receipt of non-hazardous wastes on the effectiveness of the corrective action.

(6) The Regional Administrator may require the owner or operator to commence closure of the unit if the owner or operator fails to implement corrective action measures in accordance with the approved contingent corrective measures plan within one year as required in paragraph (e)(4) of this section, or fails to make substantial progress in implementing corrective action and achieving the facility's ground-water protection standard or background levels if the facility has not yet established a ground-water protection standard.

(7) If the owner or operator fails to implement corrective measures as required in paragraph (e)(4) of this section, or if the Regional Administrator determines that substantial progress has not been made pursuant to paragraph (e)(6) of this section he shall:

(i) Notify the owner or operator in writing that the owner or operator must begin closure in accordance with the deadlines in paragraphs (a) and (b) of this section and provide a detailed statement of reasons for this determination, and

(ii) Provide the owner or operator and the public, through a newspaper notice, the opportunity to submit written comments on the decision no later than 20 days after the date of the notice.

(iii) If the Regional Administrator receives no written comments, the decision will become final five days after the close of the comment period. The Regional Administrator will notify the owner or operator that the decision is final, and that a revised closure plan, if necessary, must be submitted within 15 days of the final notice and that closure must begin in accordance with the deadlines in paragraphs (a) and (b) of this section.

(iv) If the Regional Administrator receives written comments on the decision, he shall make a final decision within 30 days after the end of the comment period, and provide the owner or operator in writing and the public through a newspaper notice, a detailed statement of reasons for the final decision. If the Regional Administrator determines that substantial progress has not

been made, closure must be initiated in accordance with the deadlines in paragraphs (a) and (b) of this section.

(v) The final determinations made by the Regional Administrator under paragraphs (e)(7) (iii) and (iv) of this section are not subject to administrative appeal.

[51 FR 16444, May 2, 1986, as amended at 54 FR 33394, Aug. 14, 1989; 71 FR 16904, Apr. 4, 2006]

§ 264.114 Disposal or decontamination of equipment, structures and soils.

top

During the partial and final closure periods, all contaminated equipment, structures and soils must be properly disposed of or decontaminated unless otherwise specified in §§264.197, 264.228, 264.258, 264.280 or §264.310. By removing any hazardous wastes or hazardous constituents during partial and final closure, the owner or operator may become a generator of hazardous waste and must handle that waste in accordance with all applicable requirements of part 262 of this chapter.

[51 FR 16444, May 2, 1986, as amended at 52 FR 46963, Dec. 10, 1987; 53 FR 34086, Sept. 2, 1988]

§ 264.115 Certification of closure.

top

Within 60 days of completion of closure of each hazardous waste surface impoundment, waste pile, land treatment, and landfill unit, and within 60 days of the completion of final closure, the owner or operator must submit to the Regional Administrator, by registered mail, a certification that the hazardous waste management unit or facility, as applicable, has been closed in accordance with the specifications in the approved closure plan. The certification must be signed by the owner or operator and by a qualified Professional Engineer. Documentation supporting the Professional Engineer's certification must be furnished to the Regional Administrator upon request until he releases the owner or operator from the financial assurance requirements for closure under §264.143(i).

[71 FR 16904, Apr. 4, 2006, as amended at 71 FR 40272, July 14, 2006]

§ 264.116 Survey plat.

top

No later than the submission of the certification of closure of each hazardous waste disposal unit, the owner or operator must submit to the local zoning authority, or the authority with jurisdiction over local land use, and to the Regional Administrator, a survey plat indicating the location and

dimensions of landfill cells or other hazardous waste disposal units with respect to permanently surveyed benchmarks. This plat must be prepared and certified by a professional land surveyor. The plat filed with the local zoning authority, or the authority with jurisdiction over local land use, must contain a note, prominently displayed, which states the owner's or operator's obligation to restrict disturbance of the hazardous waste disposal unit in accordance with the applicable subpart G regulations.

[51 FR 16444, May 2, 1986, as amended at 71 FR 40272, July 14, 2006]

§ 264.117 Post-closure care and use of property.

top

(a)(1) Post-closure care for each hazardous waste management unit subject to the requirements of §§264.117 through 264.120 must begin after completion of closure of the unit and continue for 30 years after that date and must consist of at least the following:

(i) Monitoring and reporting in accordance with the requirements of subparts F, K, L, M, N, and X of this part; and

(ii) Maintenance and monitoring of waste containment systems in accordance with the requirements of subparts F, K, L, M, N, and X of this part.

(2) Any time preceding partial closure of a hazardous waste management unit subject to post-closure care requirements or final closure, or any time during the post-closure period for a particular unit, the Regional Administrator may, in accordance with the permit modification procedures in parts 124 and 270:

(i) Shorten the post-closure care period applicable to the hazardous waste management unit, or facility, if all disposal units have been closed, if he finds that the reduced period is sufficient to protect human health and the environment (e.g., leachate or ground-water monitoring results, characteristics of the hazardous wastes, application of advanced technology, or alternative disposal, treatment, or re-use techniques indicate that the hazardous waste management unit or facility is secure); or

(ii) Extend the post-closure care period applicable to the hazardous waste management unit or facility if he finds that the extended period is necessary to protect human health and the environment (e.g., leachate or ground-water monitoring results indicate a potential for migration of hazardous wastes at levels which may be harmful to human health and the environment).

(b) The Regional Administrator may require, at partial and final closure, continuation of any of the security requirements of §264.14 during part or all of the post-closure period when:

(1) Hazardous wastes may remain exposed after completion of partial or final closure; or

(2) Access by the public or domestic livestock may pose a hazard to human health.

(c) Post-closure use of property on or in which hazardous wastes remain after partial or final closure must never be allowed to disturb the integrity of the final cover, liner(s), or any other components of the containment system, or the function of the facility's monitoring systems, unless the Regional Administrator finds that the disturbance:

(1) Is necessary to the proposed use of the property, and will not increase the potential hazard to human health or the environment; or

(2) Is necessary to reduce a threat to human health or the environment.

(d) All post-closure care activities must be in accordance with the provisions of the approved post-closure plan as specified in §264.118.

[51 FR 16444, May 2, 1986, as amended at 52 FR 46963, Dec. 10, 1987]

§ 264.118 Post-closure plan; amendment of plan.

top

(a) *Written Plan.* The owner or operator of a hazardous waste disposal unit must have a written post-closure plan. In addition, certain surface impoundments and waste piles from which the owner or operator intends to remove or decontaminate the hazardous wastes at partial or final closure are required by §§264.228(c)(1)(ii) and 264.258(c)(1)(ii) to have contingent post-closure plans. Owners or operators of surface impoundments and waste piles not otherwise required to prepare contingent post-closure plans under §§264.228(c)(1)(ii) and 264.258(c)(1)(ii) must submit a post-closure plan to the Regional Administrator within 90 days from the date that the owner or operator or Regional administrator determines that the hazardous waste management unit must be closed as a landfill, subject to the requirements of §§264.117 through 264.120. The plan must be submitted with the permit application, in accordance with §270.14(b)(13) of this chapter, and approved by the Regional Administrator as part of the permit issuance procedures under part 124 of this chapter. In accordance with §270.32 of this chapter, the approved post-closure plan will become a condition of any RCRA permit issued.

(b) For each hazardous waste management unit subject to the requirements of this section, the post-closure plan must identify the activities that will be carried on after closure of each disposal unit and the frequency of these activities, and include at least:

(1) A description of the planned monitoring activities and frequencies at which they will be performed to comply with subparts F, K, L, M, N, and X of this part during the post-closure care period; and

(2) A description of the planned maintenance activities, and frequencies at which they will be performed, to ensure:

(i) The integrity of the cap and final cover or other containment systems in accordance with the requirements of subparts F, K, L, M, N, and X of this part; and

(ii) The function of the monitoring equipment in accordance with the requirements of subparts, F, K, L, M, N, and X of this part; and

(3) The name, address, and phone number of the person or office to contact about the hazardous waste disposal unit or facility during the post-closure care period.

(4) For facilities where the Regional Administrator has applied alternative requirements at a regulated unit under §§264.90(f), 264.110(c), and/or §§264.140(d), either the alternative requirements that apply to the regulated unit, or a reference to the enforceable document containing those requirements.

(c) Until final closure of the facility, a copy of the approved post-closure plan must be furnished to the Regional Administrator upon request, including request by mail. After final closure has been certified, the person or office specified in §264.118(b)(3) must keep the approved post-closure plan during the remainder of the post-closure period.

(d) *Amendment of plan.* The owner or operator must submit a written notification of or request for a permit modification to authorize a change in the approved post-closure plan in accordance with the applicable requirements in parts 124 and 270. The written notification or request must include a copy of the amended post-closure plan for review or approval by the Regional Administrator.

(1) The owner or operator may submit a written notification or request to the Regional Administrator for a permit modification to amend the post-closure plan at any time during the active life of the facility or during the post-closure care period.

(2) The owner or operator must submit a written notification of or request for a permit modification to authorize a change in the approved post-closure plan whenever:

(i) Changes in operating plans or facility design affect the approved post-closure plan, or

(ii) There is a change in the expected year of final closure, if applicable, or

(iii) Events which occur during the active life of the facility, including partial and final closures, affect the approved post-closure plan.

(iv) The owner or operator requests the Regional Administrator to apply alternative requirements to a regulated unit under §§264.90(f), 264.110(c), and/or §264.140(d).

(3) The owner or operator must submit a written request for a permit modification at least 60 days prior to the proposed change in facility design or operation, or no later than 60 days after an unexpected event has occurred which has affected the post-closure plan. An owner or operator of a surface impoundment or waste pile that intends to remove all hazardous waste at closure and is not otherwise required to submit a contingent post-closure plan under §§264.228(c)(1)(ii) and 264.258(c)(1)(ii) must submit a post-closure plan to the Regional Administrator no later than 90 days after the date that the owner or operator or Regional Administrator determines that the

hazardous waste management unit must be closed as a landfill, subject to the requirements of §264.310. The Regional Administrator will approve, disapprove or modify this plan in accordance with the procedures in parts 124 and 270. In accordance with §270.32 of this chapter, the approved post-closure plan will become a permit condition.

(4) The Regional Administrator may request modifications to the plan under the conditions described in §264.118(d)(2). The owner or operator must submit the modified plan no later than 60 days after the Regional Administrator's request, or no later than 90 days if the unit is a surface impoundment or waste pile not previously required to prepare a contingent post-closure plan. Any modifications requested by the Regional Administrator will be approved, disapproved, or modified in accordance with the procedures in parts 124 and 270.

[51 FR 16444, May 2, 1986, as amended at 52 FR 46964, Dec. 10, 1987; 53 FR 37935, Sept. 28, 1988; 63 FR 56733, Oct. 22, 1998; 71 FR 40272, July 14, 2006]

§ 264.119 Post-closure notices.

top

(a) No later than 60 days after certification of closure of each hazardous waste disposal unit, the owner or operator must submit to the local zoning authority, or the authority with jurisdiction over local land use, and to the Regional Administrator a record of the type, location, and quantity of hazardous wastes disposed of within each cell or other disposal unit of the facility. For hazardous wastes disposed of before January 12, 1981, the owner or operator must identify the type, location, and quantity of the hazardous wastes to the best of his knowledge and in accordance with any records he has kept.

(b) Within 60 days of certification of closure of the first hazardous waste disposal unit and within 60 days of certification of closure of the last hazardous waste disposal unit, the owner or operator must:

(1) Record, in accordance with State law, a notation on the deed to the facility property—or on some other instrument which is normally examined during title search—that will in perpetuity notify any potential purchaser of the property that:

(i) The land has been used to manage hazardous wastes; and

(ii) Its use is restricted under 40 CFR part 264, subpart G regulations; and

(iii) The survey plat and record of the type, location, and quantity of hazardous wastes disposed of within each cell or other hazardous waste disposal unit of the facility required by §§264.116 and 264.119(a) have been filed with the local zoning authority or the authority with jurisdiction over local land use and with the Regional Administrator; and

(2) Submit a certification, signed by the owner or operator, that he has recorded the notation specified in paragraph (b)(1) of this section, including a copy of the document in which the notation has been placed, to the Regional Administrator.

(c) If the owner or operator or any subsequent owner or operator of the land upon which a hazardous waste disposal unit is located wishes to remove hazardous wastes and hazardous waste residues, the liner, if any, or contaminated soils, he must request a modification to the post-closure permit in accordance with the applicable requirements in parts 124 and 270. The owner or operator must demonstrate that the removal of hazardous wastes will satisfy the criteria of §264.117(c). By removing hazardous waste, the owner or operator may become a generator of hazardous waste and must manage it in accordance with all applicable requirements of this chapter. If he is granted a permit modification or otherwise granted approval to conduct such removal activities, the owner or operator may request that the Regional Administrator approve either:

(1) The removal of the notation on the deed to the facility property or other instrument normally examined during title search; or

(2) The addition of a notation to the deed or instrument indicating the removal of the hazardous waste.

[51 FR 16444, May 2, 1986, as amended at 71 FR 40272, July 14, 2006]

§ 264.120 Certification of completion of post-closure care.

top

No later than 60 days after completion of the established post-closure care period for each hazardous waste disposal unit, the owner or operator must submit to the Regional Administrator, by registered mail, a certification that the post-closure care period for the hazardous waste disposal unit was performed in accordance with the specifications in the approved post-closure plan. The certification must be signed by the owner or operator and a qualified Professional Engineer. Documentation supporting the Professional Engineer's certification must be furnished to the Regional Administrator upon request until he releases the owner or operator from the financial assurance requirements for post-closure care under §264.145(i).

[71 FR 16904, Apr. 4, 2006]

Subpart I—Use and Management of Containers

top

Source: 46 FR 2866, Jan. 12, 1981, unless otherwise noted.

§ 264.170 Applicability.

top

The regulations in this subpart apply to owners and operators of all hazardous waste facilities that store containers of hazardous waste, except as §264.1 provides otherwise.

[*Comment:* Under §261.7 and §261.33(c), if a hazardous waste is emptied from a container the residue remaining in the container is not considered a hazardous waste if the container is "empty" as defined in §261.7. In that event, management of the container is exempt from the requirements of this subpart.]

§ 264.171 Condition of containers.

top

If a container holding hazardous waste is not in good condition (e.g., severe rusting, apparent structural defects) or if it begins to leak, the owner or operator must transfer the hazardous waste from this container to a container that is in good condition or manage the waste in some other way that complies with the requirements of this part.

§ 264.172 Compatibility of waste with containers.

top

The owner or operator must use a container made of or lined with materials which will not react with, and are otherwise compatible with, the hazardous waste to be stored, so that the ability of the container to contain the waste is not impaired.

§ 264.173 Management of containers.

top

(a) A container holding hazardous waste must always be closed during storage, except when it is necessary to add or remove waste.

(b) A container holding hazardous waste must not be opened, handled, or stored in a manner which may rupture the container or cause it to leak.

[*Comment:* Reuse of containers in transportation is governed by U.S. Department of Transportation regulations including those set forth in 49 CFR 173.28.]

§ 264.174 Inspections.

top

At least weekly, the owner or operator must inspect areas where containers are stored, except for Performance Track member facilities, that may conduct inspections at least once each month, upon approval by the Director. To apply for reduced inspection frequencies, the Performance Track member facility must follow the procedures identified in §264.15(b)(5) of this part. The owner or operator must look for leaking containers and for deterioration of containers and the containment system caused by corrosion or other factors.

[Comment: See §§264.15(c) and 264.171 for remedial action required if deterioration or leaks are detected.]

[71 FR 16905, Apr. 4, 2006]

§ 264.175 Containment.

top

(a) Container storage areas must have a containment system that is designed and operated in accordance with paragraph (b) of this section, except as otherwise provided by paragraph (c) of this section.

(b) A containment system must be designed and operated as follows:

(1) A base must underlie the containers which is free of cracks or gaps and is sufficiently impervious to contain leaks, spills, and accumulated precipitation until the collected material is detected and removed;

(2) The base must be sloped or the containment system must be otherwise designed and operated to drain and remove liquids resulting from leaks, spills, or precipitation, unless the containers are elevated or are otherwise protected from contact with accumulated liquids;

(3) The containment system must have sufficient capacity to contain 10% of the volume of containers or the volume of the largest container, whichever is greater. Containers that do not contain free liquids need not be considered in this determination;

(4) Run-on into the containment system must be prevented unless the collection system has sufficient excess capacity in addition to that required in paragraph (b)(3) of this section to contain any run-on which might enter the system; and

(5) Spilled or leaked waste and accumulated precipitation must be removed from the sump or collection area in as timely a manner as is necessary to prevent overflow of the collection system.

[*Comment:* If the collected material is a hazardous waste under part 261 of this Chapter, it must be managed as a hazardous waste in accordance with all applicable requirements of parts 262 through 266 of this chapter. If the collected material is discharged through a point source to waters of the United States, it is subject to the requirements of section 402 of the Clean Water Act, as amended.]

(c) Storage areas that store containers holding only wastes that do not contain free liquids need not have a containment system defined by paragraph (b) of this section, except as provided by paragraph (d) of this section or provided that:

(1) The storage area is sloped or is otherwise designed and operated to drain and remove liquid resulting from precipitation, or

(2) The containers are elevated or are otherwise protected from contact with accumulated liquid.

(d) Storage areas that store containers holding the wastes listed below that do not contain free liquids must have a containment system defined by paragraph (b) of this section:

(1) FO20, FO21, FO22, FO23, FO26, and FO27.

(2) [Reserved]

[46 FR 55112, Nov. 6, 1981, as amended at 50 FR 2003, Jan. 14, 1985; 71 FR 40273, July 14, 2006]

§ 264.176 Special requirements for ignitable or reactive waste.

top

Containers holding ignitable or reactive waste must be located at least 15 meters (50 feet) from the facility's property line.

[*Comment:* See §264.17(a) for additional requirements.]

§ 264.177 Special requirements for incompatible wastes.

top

(a) Incompatible wastes, or incompatible wastes and materials (see appendix V for examples), must not be placed in the same container, unless §264.17(b) is complied with.

(b) Hazardous waste must not be placed in an unwashed container that previously held an incompatible waste or material.

[*Comment:* As required by §264.13, the waste analysis plan must include analyses needed to comply with §264.177. Also, §264.17(c) requires wastes analyses, trial tests or other documentation to assure compliance with §264.17(b). As required by §264.73, the owner or operator must place the results of each waste analysis and trial test, and any documented information, in the operating record of the facility.]

(c) A storage container holding a hazardous waste that is incompatible with any waste or other materials stored nearby in other containers, piles, open tanks, or surface impoundments must be separated from the other materials or protected from them by means of a dike, berm, wall, or other device.

[*Comment:* The purpose of this section is to prevent fires, explosions, gaseous emission, leaching, or other discharge of hazardous waste or hazardous waste constituents which could result from the mixing of incompatible wastes or materials if containers break or leak.]

§ 264.178 Closure.

top

At closure, all hazardous waste and hazardous waste residues must be removed from the containment system. Remaining containers, liners, bases, and soil containing or contaminated with hazardous waste or hazardous waste residues must be decontaminated or removed.

[*Comment:* At closure, as throughout the operating period, unless the owner or operator can demonstrate in accordance with §261.3(d) of this chapter that the solid waste removed from the containment system is not a hazardous waste, the owner or operator becomes a generator of hazardous waste and must manage it in accordance with all applicable requirements of parts 262 through 266 of this chapter].

§ 264.179 Air emission standards.

top

The owner or operator shall manage all hazardous waste placed in a container in accordance with the applicable requirements of subparts AA, BB, and CC of this part.

[61 FR 59950, Nov. 25, 1996]

Subpart J—Tank Systems

top

Source: 51 FR 25472, July 14, 1986, unless otherwise noted.

§ 264.190 Applicability.

top

The requirements of this subpart apply to owners and operators of facilities that use tank systems for storing or treating hazardous waste except as otherwise provided in paragraphs (a), (b), and (c) of this section or in §264.1 of this part.

(a) Tank systems that are used to store or treat hazardous waste which contains no free liquids and are situated inside a building with an impermeable floor are exempted from the requirements in §264.193. To demonstrate the absence or presence of free liquids in the stored/treated waste, the following test must be used: Method 9095B (Paint Filter Liquids Test) as described in "Test Methods for Evaluating Solid Waste, Physical/Chemical Methods," EPA Publication SW–846, as incorporated by reference in §260.11 of this chapter.

(b) Tank systems, including sumps, as defined in §260.10, that serve as part of a secondary containment system to collect or contain releases of hazardous wastes are exempted from the requirements in §264.193(a).

(c) Tanks, sumps, and other such collection devices or systems used in conjunction with drip pads, as defined in §260.10 of this chapter and regulated under 40 CFR part 264 subpart W, must meet the requirements of this subpart.

[51 FR 25472, July 14, 1986; 51 FR 29430, Aug. 15, 1986, as amended at 53 FR 34086, Sept. 2, 1988; 55 FR 50484, Dec. 6, 1990; 58 FR 46050, Aug. 31, 1993; 70 FR 34581, June 14, 2005]

§ 264.191 Assessment of existing tank system's integrity.

top

(a) For each existing tank system that does not have secondary containment meeting the requirements of §264.193, the owner or operator must determine that the tank system is not leaking or is unfit for use. Except as provided in paragraph (c) of this section, the owner or operator must obtain and keep on file at the facility a written assessment reviewed and certified by a qualified Professional Engineer, in accordance with §270.11(d) of this chapter, that attests to the tank system's integrity by January 12, 1988.

(b) This assessment must determine that the tank system is adequately designed and has sufficient structural strength and compatibility with the waste(s) to be stored or treated, to ensure that it will not collapse, rupture, or fail. At a minimum, this assessment must consider the following:

(1) Design standard(s), if available, according to which the tank and ancillary equipment were constructed;

(2) Hazardous characteristics of the waste(s) that have been and will be handled;

(3) Existing corrosion protection measures;

(4) Documented age of the tank system, if available (otherwise, an estimate of the age); and

(5) Results of a leak test, internal inspection, or other tank integrity examination such that:

(i) For non-enterable underground tanks, the assessment must include a leak test that is capable of taking into account the effects of temperature variations, tank end deflection, vapor pockets, and high water table effects, and

(ii) For other than non-enterable underground tanks and for ancillary equipment, this assessment must include either a leak test, as described above, or other integrity examination that is certified by a qualified Professional Engineer in accordance with §270.11(d) of this chapter, that addresses cracks, leaks, corrosion, and erosion.

[Note: The practices described in the American Petroleum Institute (API) Publication, Guide for Inspection of Refinery Equipment, Chapter XIII, “Atmospheric and Low-Pressure Storage Tanks,” 4th edition, 1981, may be used, where applicable, as guidelines in conducting other than a leak test.]

(c) Tank systems that store or treat materials that become hazardous wastes subsequent to July 14, 1986, must conduct this assessment within 12 months after the date that the waste becomes a hazardous waste.

(d) If, as a result of the assessment conducted in accordance with paragraph (a), a tank system is found to be leaking or unfit for use, the owner or operator must comply with the requirements of §264.196.

[51 FR 25472, July 14, 1986; 51 FR 29430, Aug. 15, 1986, as amended at 71 FR 16905, Apr. 4, 2006]

§ 264.192 Design and installation of new tank systems or components.

top

(a) Owners or operators of new tank systems or components must obtain and submit to the Regional Administrator, at time of submittal of part B information, a written assessment, reviewed and certified by a qualified Professional Engineer, in accordance with §270.11(d) of this chapter, attesting that the tank system has sufficient structural integrity and is acceptable for the storing and treating of hazardous waste. The assessment must show that the foundation, structural support, seams, connections, and pressure controls (if applicable) are adequately designed and that the tank system has sufficient structural strength, compatibility with the waste(s) to be stored or treated, and corrosion protection to ensure that it will not collapse, rupture, or fail. This assessment, which will be used by the Regional Administrator to review and approve or disapprove the acceptability of the tank system design, must include, at a minimum, the following information:

(1) Design standard(s) according to which tank(s) and/or the ancillary equipment are constructed;

(2) Hazardous characteristics of the waste(s) to be handled;

(3) For new tank systems or components in which the external shell of a metal tank or any external metal component of the tank system will be in contact with the soil or with water, a determination by a corrosion expert of:

(i) Factors affecting the potential for corrosion, including but not limited to:

(A) Soil moisture content;

(B) Soil pH;

(C) Soil sulfides level;

(D) Soil resistivity;

(E) Structure to soil potential;

(F) Influence of nearby underground metal structures (e.g., piping);

(G) Existence of stray electric current;

(H) Existing corrosion-protection measures (e.g., coating, cathodic protection), and

(ii) The type and degree of external corrosion protection that are needed to ensure the integrity of the tank system during the use of the tank system or component, consisting of one or more of the following:

(A) Corrosion-resistant materials of construction such as special alloys, fiberglass reinforced plastic, etc.;

(B) Corrosion-resistant coating (such as epoxy, fiberglass, etc.) with cathodic protection (e.g., impressed current or sacrificial anodes); and

(C) Electrical isolation devices such as insulating joints, flanges, etc.

[Note: The practices described in the National Association of Corrosion Engineers (NACE) standard, "Recommended Practice (RP–02–85)—Control of External Corrosion on Metallic Buried, Partially Buried, or Submerged Liquid Storage Systems," and the American Petroleum Institute (API) Publication 1632, "Cathodic Protection of Underground Petroleum Storage Tanks and Piping Systems," may be used, where applicable, as guidelines in providing corrosion protection for tank systems.]

(4) For underground tank system components that are likely to be adversely affected by vehicular traffic, a determination of design or operational measures that will protect the tank system against potential damage; and

(5) Design considerations to ensure that:

(i) Tank foundations will maintain the load of a full tank;

(ii) Tank systems will be anchored to prevent flotation or dislodgment where the tank system is placed in a saturated zone, or is located within a seismic fault zone subject to the standards of §264.18(a); and

(iii) Tank systems will withstand the effects of frost heave.

(b) The owner or operator of a new tank system must ensure that proper handling procedures are adhered to in order to prevent damage to the system during installation. Prior to covering, enclosing, or placing a new tank system or component in use, an independent, qualified, installation inspector or a qualified Professional Engineer, either of whom is trained and experienced in the proper installation of tanks systems or components, must inspect the system for the presence of any of the following items:

(1) Weld breaks;

(2) Punctures;

(3) Scrapes of protective coatings;

(4) Cracks;

(5) Corrosion;

(6) Other structural damage or inadequate construction/installation.

All discrepancies must be remedied before the tank system is covered, enclosed, or placed in use.

(c) New tank systems or components that are placed underground and that are backfilled must be provided with a backfill material that is a noncorrosive, porous, homogeneous substance and that is installed so that the backfill is placed completely around the tank and compacted to ensure that the tank and piping are fully and uniformly supported.

(d) All new tanks and ancillary equipment must be tested for tightness prior to being covered, enclosed, or placed in use. If a tank system is found not to be tight, all repairs necessary to remedy the leak(s) in the system must be performed prior to the tank system being covered, enclosed, or placed into use.

(e) Ancillary equipment must be supported and protected against physical damage and excessive stress due to settlement, vibration, expansion, or contraction.

[Note: The piping system installation procedures described in American Petroleum Institute (API) Publication 1615 (November 1979), "Installation of Underground Petroleum Storage Systems," or ANSI Standard B31.3, "Petroleum Refinery Piping," and ANSI Standard B31.4 "Liquid Petroleum Transportation Piping System," may be used, where applicable, as guidelines for proper installation of piping systems.]

(f) The owner or operator must provide the type and degree of corrosion protection recommended by an independent corrosion expert, based on the information provided under paragraph (a)(3) of this section, or other corrosion protection if the Regional Administrator believes other corrosion protection is necessary to ensure the integrity of the tank system during use of the tank system. The installation of a corrosion protection system that is field fabricated must be supervised by an independent corrosion expert to ensure proper installation.

(g) The owner or operator must obtain and keep on file at the facility written statements by those persons required to certify the design of the tank system and supervise the installation of the tank system in accordance with the requirements of paragraphs (b) through (f) of this section, that attest that the tank system was properly designed and installed and that repairs, pursuant to paragraphs (b) and (d) of this section, were performed. These written statements must also include the certification statement as required in §270.11(d) of this chapter.

[51 FR 25472, July 14, 1986; 51 FR 29430, Aug. 15, 1986, as amended at 71 FR 16905, Apr. 4, 2006]

§ 264.193 Containment and detection of releases.

top

(a) In order to prevent the release of hazardous waste or hazardous constituents to the environment, secondary containment that meets the requirements of this section must be provided (except as provided in paragraphs (f) and (g) of this section):

(1) For all new and existing tank systems or components, prior to their being put into service.

(2) For tank systems that store or treat materials that become hazardous wastes, within two years of the hazardous waste listing, or when the tank system has reached 15 years of age, whichever comes later.

(b) Secondary containment systems must be:

(1) Designed, installed, and operated to prevent any migration of wastes or accumulated liquid out of the system to the soil, ground water, or surface water at any time during the use of the tank system; and

(2) Capable of detecting and collecting releases and accumulated liquids until the collected material is removed.

(c) To meet the requirements of paragraph (b) of this section, secondary containment systems must be at a minimum:

(1) Constructed of or lined with materials that are compatible with the wastes(s) to be placed in the tank system and must have sufficient strength and thickness to prevent failure owing to pressure gradients (including static head and external hydrological forces), physical contact with the waste to which it is exposed, climatic conditions, and the stress of daily operation (including stresses from nearby vehicular traffic).

(2) Placed on a foundation or base capable of providing support to the secondary containment system, resistance to pressure gradients above and below the system, and capable of preventing failure due to settlement, compression, or uplift;

(3) Provided with a leak-detection system that is designed and operated so that it will detect the failure of either the primary or secondary containment structure or the presence of any release of hazardous waste or accumulated liquid in the secondary containment system within 24 hours, or at the earliest practicable time if the owner or operator can demonstrate to the Regional Administrator that existing detection technologies or site conditions will not allow detection of a release within 24 hours; and

(4) Sloped or otherwise designed or operated to drain and remove liquids resulting from leaks, spills, or precipitation. Spilled or leaked waste and accumulated precipitation must be removed from the secondary containment system within 24 hours, or in as timely a manner as is possible to prevent harm to human health and the environment, if the owner or operator can demonstrate to the Regional Administrator that removal of the released waste or accumulated precipitation cannot be accomplished within 24 hours.

[Note: If the collected material is a hazardous waste under part 261 of this chapter, it is subject to management as a hazardous waste in accordance with all applicable requirements of parts 262 through 265 of this chapter. If the collected material is discharged through a point source to waters of the United States, it is subject to the requirements of sections 301, 304, and 402 of the Clean Water Act, as amended. If discharged to a Publicly Owned Treatment Works (POTW), it is subject to the requirements of section 307 of the Clean Water Act, as amended. If the collected material is released to the environment, it may be subject to the reporting requirements of 40 CFR part 302.]

(d) Secondary containment for tanks must include one or more of the following devices:

(1) A liner (external to the tank);

(2) A vault;

(3) A double-walled tank; or

(4) An equivalent device as approved by the Regional Administrator.

(e) In addition to the requirements of paragraphs (b), (c), and (d) of this section, secondary containment systems must satisfy the following requirements:

(1) External liner systems must be:

(i) Designed or operated to contain 100 percent of the capacity of the largest tank within its boundary;

(ii) Designed or operated to prevent run-on or infiltration of precipitation into the secondary containment system unless the collection system has sufficient excess capacity to contain run-on or infiltration. Such additional capacity must be sufficient to contain precipitation from a 25-year, 24-hour rainfall event.

(iii) Free of cracks or gaps; and

(iv) Designed and installed to surround the tank completely and to cover all surrounding earth likely to come into contact with the waste if the waste is released from the tank(s) (i.e., capable of preventing lateral as well as vertical migration of the waste).

(2) Vault systems must be:

(i) Designed or operated to contain 100 percent of the capacity of the largest tank within its boundary;

(ii) Designed or operated to prevent run-on or infiltration of precipitation into the secondary containment system unless the collection system has sufficient excess capacity to contain run-on or infiltration. Such additional capacity must be sufficient to contain precipitation from a 25-year, 24-hour rainfall event;

(iii) Constructed with chemical-resistant water stops in place at all joints (if any);

(iv) Provided with an impermeable interior coating or lining that is compatible with the stored waste and that will prevent migration of waste into the concrete;

(v) Provided with a means to protect against the formation of and ignition of vapors within the vault, if the waste being stored or treated:

(A) Meets the definition of ignitable waste under §261.21 of this chapter; or

(B) Meets the definition of reactive waste under §261.23 of this chapter, and may form an ignitable or explosive vapor; and

(vi) Provided with an exterior moisture barrier or be otherwise designed or operated to prevent migration of moisture into the vault if the vault is subject to hydraulic pressure.

(3) Double-walled tanks must be:

(i) Designed as an integral structure (i.e., an inner tank completely enveloped within an outer shell) so that any release from the inner tank is contained by the outer shell;

(ii) Protected, if constructed of metal, from both corrosion of the primary tank interior and of the external surface of the outer shell; and

(iii) Provided with a built-in continuous leak detection system capable of detecting a release within 24 hours, or at the earliest practicable time, if the owner or operator can demonstrate to the Regional Administrator, and the Regional Administrator concludes, that the existing detection technology or site conditions would not allow detection of a release within 24 hours.

[Note: The provisions outlined in the Steel Tank Institute's (STI) “Standard for Dual Wall Underground Steel Storage Tanks” may be used as guidelines for aspects of the design of underground steel double-walled tanks.]

(f) Ancillary equipment must be provided with secondary containment (e.g., trench, jacketing, double-walled piping) that meets the requirements of paragraphs (b) and (c) of this section except for:

(1) Aboveground piping (exclusive of flanges, joints, valves, and other connections) that are visually inspected for leaks on a daily basis;

(2) Welded flanges, welded joints, and welded connections, that are visually inspected for leaks on a daily basis;

(3) Sealless or magnetic coupling pumps and sealless valves, that are visually inspected for leaks on a daily basis; and

(4) Pressurized aboveground piping systems with automatic shut-off devices (e.g., excess flow check valves, flow metering shutdown devices, loss of pressure actuated shut-off devices) that are visually inspected for leaks on a daily basis.

(g) The owner or operator may obtain a variance from the requirements of this section if the Regional Administrator finds, as a result of a demonstration by the owner or operator that alternative design and operating practices, together with location characteristics, will prevent the migration of any hazardous waste or hazardous constituents into the ground water; or surface water at least as effectively as secondary containment during the active life of the tank system *or* that in the event of a release that does migrate to ground water or surface water, no substantial present or potential hazard will be posed to human health or the environment. New underground tank systems may not, per a demonstration in accordance with paragraph (g)(2) of this section, be exempted from the secondary containment requirements of this section.

(1) In deciding whether to grant a variance based on a demonstration of equivalent protection of ground water and surface water, the Regional Administrator will consider:

(i) The nature and quantity of the wastes;

(ii) The proposed alternate design and operation;

(iii) The hydrogeologic setting of the facility, including the thickness of soils present between the tank system and ground water; and

(iv) All other factors that would influence the quality and mobility of the hazardous constituents and the potential for them to migrate to ground water or surface water.

(2) In deciding whether to grant a variance based on a demonstration of no substantial present or potential hazard, the Regional Administrator will consider:

(i) The potential adverse effects on ground water, surface water, and land quality taking into account:

(A) The physical and chemical characteristics of the waste in the tank system, including its potential for migration,

(B) The hydrogeological characteristics of the facility and surrounding land,

(C) The potential for health risks caused by human exposure to waste constituents,

(D) The potential for damage to wildlife, crops, vegetation, and physical structures caused by exposure to waste constituents, and

(E) The persistence and permanence of the potential adverse effects;

(ii) The potential adverse effects of a release on ground-water quality, taking into account:

(A) The quantity and quality of ground water and the direction of ground-water flow,

(B) The proximity and withdrawal rates of ground-water users,

(C) The current and future uses of ground water in the area, and

(D) The existing quality of ground water, including other sources of contamination and their cumulative impact on the ground-water quality;

(iii) The potential adverse effects of a release on surface water quality, taking into account:

(A) The quantity and quality of ground water and the direction of ground-water flow,

(B) The patterns of rainfall in the region,

(C) The proximity of the tank system to surface waters,

(D) The current and future uses of surface waters in the area and any water quality standards established for those surface waters, and

(E) The existing quality of surface water, including other sources of contamination and the cumulative impact on surface-water quality; and

(iv) The potential adverse effects of a release on the land surrounding the tank system, taking into account:

(A) The patterns of rainfall in the region, and

(B) The current and future uses of the surrounding land.

(3) The owner or operator of a tank system, for which a variance from secondary containment had been granted in accordance with the requirements of paragraph (g)(1) of this section, at which a release of hazardous waste has occurred from the primary tank system but has not migrated beyond the zone of engineering control (as established in the variance), must:

(i) Comply with the requirements of §264.196, except paragraph (d), and

(ii) Decontaminate or remove contaminated soil to the extent necessary to:

(A) Enable the tank system for which the variance was granted to resume operation with the capability for the detection of releases at least equivalent to the capability it had prior to the release; and

(B) Prevent the migration of hazardous waste or hazardous constituents to ground water or surface water; and

(iii) If contaminated soil cannot be removed or decontaminated in accordance with paragraph (g)(3)(ii) of this section, comply with the requirement of §264.197(b).

(4) The owner or operator of a tank system, for which a variance from secondary containment had been granted in accordance with the requirements of paragraph (g)(1) of this section, at which a release of hazardous waste has occurred from the primary tank system and has migrated beyond the zone of engineering control (as established in the variance), must:

(i) Comply with the requirements of §264.196 (a), (b), (c), and (d); and

(ii) Prevent the migration of hazardous waste or hazardous constituents to ground water or surface water, if possible, and decontaminate or remove contaminated soil. If contaminated soil cannot be decontaminated or removed or if ground water has been contaminated, the owner or operator must comply with the requirements of §264.197(b); and

(iii) If repairing, replacing, or reinstalling the tank system, provide secondary containment in accordance with the requirements of paragraphs (a) through (f) of this section or reapply for a variance from secondary containment and meet the requirements for new tank systems in §264.192 if the tank system is replaced. The owner or operator must comply with these requirements even if contaminated soil can be decontaminated or removed and ground water or surface water has not been contaminated.

(h) The following procedures must be followed in order to request a variance from secondary containment:

(1) The Regional Administrator must be notified in writing by the owner or operator that he intends to conduct and submit a demonstration for a variance from secondary containment as allowed in paragraph (g) of this section according to the following schedule:

(i) For existing tank systems, at least 24 months prior to the date that secondary containment must be provided in accordance with paragraph (a) of this section.

(ii) For new tank systems, at least 30 days prior to entering into a contract for installation.

(2) As part of the notification, the owner or operator must also submit to the Regional Administrator a description of the steps necessary to conduct the demonstration and a timetable for completing each of the steps. The demonstration must address each of the factors listed in paragraph (g)(1) or paragraph (g)(2) of this section;

(3) The demonstration for a variance must be completed within 180 days after notifying the Regional Administrator of an intent to conduct the demonstration; and

(4) If a variance is granted under this paragraph, the Regional Administrator will require the permittee to construct and operate the tank system in the manner that was demonstrated to meet the requirements for the variance.

(i) All tank systems, until such time as secondary containment that meets the requirements of this section is provided, must comply with the following:

(1) For non-enterable underground tanks, a leak test that meets the requirements of §264.191(b)(5) or other tank integrity method, as approved or required by the Regional Administrator, must be conducted at least annually.

(2) For other than non-enterable underground tanks, the owner or operator must either conduct a leak test as in paragraph (i)(1) of this section or develop a schedule and procedure for an assessment of the overall condition of the tank system by a qualified Professional Engineer. The schedule and procedure must be adequate to detect obvious cracks, leaks, and corrosion or erosion that may lead to cracks and leaks. The owner or operator must remove the stored waste from the tank, if necessary, to allow the condition of all internal tank surfaces to be assessed. The frequency of these assessments must be based on the material of construction of the tank and its ancillary equipment, the age of the system, the type of corrosion or erosion protection used, the rate of corrosion or erosion observed during the previous inspection, and the characteristics of the waste being stored or treated.

(3) For ancillary equipment, a leak test or other integrity assessment as approved by the Regional Administrator must be conducted at least annually.

[Note: The practices described in the American Petroleum Institute (API) Publication Guide for Inspection of Refinery Equipment, Chapter XIII, "Atmospheric and Low-Pressure Storage Tanks," 4th edition, 1981, may be used, where applicable, as guidelines for assessing the overall condition of the tank system.]

(4) The owner or operator must maintain on file at the facility a record of the results of the assessments conducted in accordance with paragraphs (i)(1) through (i)(3) of this section.

(5) If a tank system or component is found to be leaking or unfit for use as a result of the leak test or assessment in paragraphs (i)(1) through (i)(3) of this section, the owner or operator must comply with the requirements of §264.196.

[51 FR 25472, July 14, 1986; 51 FR 29430, Aug. 15, 1986, as amended at 53 FR 34086, Sept. 2, 1988; 71 FR 16905, Apr. 4, 2006; 71 FR 40273, July 14, 2006]

§ 264.194 General operating requirements.

top

(a) Hazardous wastes or treatment reagents must not be placed in a tank system if they could cause the tank, its ancillary equipment, or the containment system to rupture, leak, corrode, or otherwise fail.

(b) The owner or operator must use appropriate controls and practices to prevent spills and overflows from tank or containment systems. These include at a minimum:

(1) Spill prevention controls (e.g., check valves, dry disconnect couplings);

(2) Overfill prevention controls (e.g., level sensing devices, high level alarms, automatic feed cutoff, or bypass to a standby tank); and

(3) Maintenance of sufficient freeboard in uncovered tanks to prevent overtopping by wave or wind action or by precipitation.

(c) The owner or operator must comply with the requirements of §264.196 if a leak or spill occurs in the tank system.

§ 264.195 Inspections.

top

(a) The owner or operator must develop and follow a schedule and procedure for inspecting overfill controls.

(b) The owner or operator must inspect at least once each operating day data gathered from monitoring and leak detection equipment (e.g., pressure or temperature gauges, monitoring wells) to ensure that the tank system is being operated according to its design.

[Note: Section 264.15(c) requires the owner or operator to remedy any deterioration or malfunction he finds. Section 264.196 requires the owner or operator to notify the Regional Administrator within 24 hours of confirming a leak. Also, 40 CFR part 302 may require the owner or operator to notify the National Response Center of a release.]

(c) In addition, except as noted under paragraph (d) of this section, the owner or operator must inspect at least once each operating day:

(1) Above ground portions of the tank system, if any, to detect corrosion or releases of waste.

(2) The construction materials and the area immediately surrounding the externally accessible portion of the tank system, including the secondary containment system (*e.g.* , dikes) to detect erosion or signs of releases of hazardous waste (*e.g.* , wet spots, dead vegetation).

(d) Owners or operators of tank systems that either use leak detection systems to alert facility personnel to leaks, or implement established workplace practices to ensure leaks are promptly identified, must inspect at least weekly those areas described in paragraphs (c)(1) and (c)(2) of this section. Use of the alternate inspection schedule must be documented in the facility's operating record. This documentation must include a description of the established workplace practices at the facility.

(e) Performance Track member facilities may inspect on a less frequent basis, upon approval by the Director, but must inspect at least once each month. To apply for a less than weekly inspection frequency, the Performance Track member facility must follow the procedures described in §264.15(b)(5).

(f) Ancillary equipment that is not provided with secondary containment, as described in §264.193(f)(1) through (4), must be inspected at least once each operating day.

(g) The owner or operator must inspect cathodic protection systems, if present, according to, at a minimum, the following schedule to ensure that they are functioning properly:

(1) The proper operation of the cathodic protection system must be confirmed within six months after initial installation and annually thereafter; and

(2) All sources of impressed current must be inspected and/or tested, as appropriate, at least bimonthly (i.e., every other month).

[Note: The practices described in the National Association of Corrosion Engineers (NACE) standard, "Recommended Practice (RP–02–85)—Control of External Corrosion on Metallic Buried, Partially Buried, or Submerged Liquid Storage Systems," and the American Petroleum Institute (API) Publication 1632, "Cathodic Protection of Underground Petroleum Storage Tanks and Piping Systems," may be used, where applicable, as guidelines in maintaining and inspecting cathodic protection systems.]

(h) The owner or operator must document in the operating record of the facility an inspection of those items in paragraphs (a) through (c) of this section.

[51 FR 25472, July 14, 1986, as amended at 71 FR 16906, Apr. 4, 2006]

§ 264.196 Response to leaks or spills and disposition of leaking or unfit-for-use tank systems.

top

A tank system or secondary containment system from which there has been a leak or spill, or which is unfit for use, must be removed from service immediately, and the owner or operator must satisfy the following requirements:

(a) *Cessation of use; prevent flow or addition of wastes.* The owner or operator must immediately stop the flow of hazardous waste into the tank system or secondary containment system and inspect the system to determine the cause of the release.

(b) *Removal of waste from tank system or secondary containment system.* (1) If the release was from the tank system, the owner/operator must, within 24 hours after detection of the leak or, if the owner/operator demonstrates that it is not possible, at the earliest practicable time, remove as much of the waste as is necessary to prevent further release of hazardous waste to the environment and to allow inspection and repair of the tank system to be performed.

(2) If the material released was to a secondary containment system, all released materials must be removed within 24 hours or in as timely a manner as is possible to prevent harm to human health and the environment.

(c) *Containment of visible releases to the environment.* The owner/operator must immediately conduct a visual inspection of the release and, based upon that inspection:

(1) Prevent further migration of the leak or spill to soils or surface water; and

(2) Remove, and properly dispose of, any visible contamination of the soil or surface water.

(d) *Notifications, reports.* (1) Any release to the environment, except as provided in paragraph (d)(2) of this section, must be reported to the Regional Administrator within 24 hours of its detection. If the release has been reported pursuant to 40 CFR part 302, that report will satisfy this requirement.

(2) A leak or spill of hazardous waste is exempted from the requirements of this paragraph if it is:

(i) Less than or equal to a quantity of one (1) pound, and

(ii) Immediately contained and cleaned up.

(3) Within 30 days of detection of a release to the environment, a report containing the following information must be submitted to the Regional Administrator:

(i) Likely route of migration of the release;

(ii) Characteristics of the surrounding soil (soil composition, geology, hydrogeology, climate);

(iii) Results of any monitoring or sampling conducted in connection with the release (if available). If sampling or monitoring data relating to the release are not available within 30 days, these data must be submitted to the Regional Administrator as soon as they become available.

(iv) Proximity to downgradient drinking water, surface water, and populated areas; and

(v) Description of response actions taken or planned.

(e) *Provision of secondary containment, repair, or closure.* (1) Unless the owner/operator satisfies the requirements of paragraphs (e)(2) through (4) of this section, the tank system must be closed in accordance with §264.197.

(2) If the cause of the release was a spill that has not damaged the integrity of the system, the owner/operator may return the system to service as soon as the released waste is removed and repairs, if necessary, are made.

(3) If the cause of the release was a leak from the primary tank system into the secondary containment system, the system must be repaired prior to returning the tank system to service.

(4) If the source of the release was a leak to the environment from a component of a tank system without secondary containment, the owner/operator must provide the component of the system from which the leak occurred with secondary containment that satisfies the requirements of §264.193 before it can be returned to service, unless the source of the leak is an aboveground portion of a tank system that can be inspected visually. If the source is an aboveground component that can be inspected visually, the component must be repaired and may be returned

to service without secondary containment as long as the requirements of paragraph (f) of this section are satisfied. If a component is replaced to comply with the requirements of this subparagraph, that component must satisfy the requirements for new tank systems or components in §§264.192 and 264.193. Additionally, if a leak has occurred in any portion of a tank system component that is not readily accessible for visual inspection (e.g., the bottom of an inground or onground tank), the entire component must be provided with secondary containment in accordance with §264.193 prior to being returned to use.

(f) *Certification of major repairs.* If the owner/operator has repaired a tank system in accordance with paragraph (e) of this section, and the repair has been extensive (*e.g.* , installation of an internal liner; repair of a ruptured primary containment or secondary containment vessel), the tank system must not be returned to service unless the owner/operator has obtained a certification by a qualified Professional Engineer in accordance with §270.11(d) of this chapter that the repaired system is capable of handling hazardous wastes without release for the intended life of the system. This certification must be placed in the operating record and maintained until closure of the facility.

[Note: The Regional Administrator may, on the basis of any information received that there is or has been a release of hazardous waste or hazardous constituents into the environment, issue an order under RCRA section 3004(v), 3008(h), or 7003(a) requiring corrective action or such other response as deemed necessary to protect human health or the environment.]

[Note: See §264.15(c) for the requirements necessary to remedy a failure. Also, 40 CFR part 302 may require the owner or operator to notify the National Response Center of certain releases.]

[51 FR 25472, July 14, 1986; 51 FR 29430, Aug. 15, 1986, as amended at 53 FR 34086, Sept. 2, 1988; 71 FR 16906, Apr. 4, 2006]

§ 264.197 Closure and post-closure care.

top

(a) At closure of a tank system, the owner or operator must remove or decontaminate all waste residues, contaminated containment system components (liners, etc.), contaminated soils, and structures and equipment contaminated with waste, and manage them as hazardous waste, unless §261.3(d) of this chapter applies. The closure plan, closure activities, cost estimates for closure, and financial responsibility for tank systems must meet all of the requirements specified in subparts G and H of this part.

(b) If the owner or operator demonstrates that not all contaminated soils can be practicably removed or decontaminated as required in paragraph (a) of this section, then the owner or operator must close the tank system and perform post-closure care in accordance with the closure and post-closure care requirements that apply to landfills (§264.310). In addition, for the purposes of closure, post-closure, and financial responsibility, such a tank system is then considered to be a landfill, and the owner or operator must meet all of the requirements for landfills specified in subparts G and H of this part.

(c) If an owner or operator has a tank system that does not have secondary containment that meets the requirements of §264.193 (b) through (f) and has not been granted a variance from the secondary containment requirements in accordance with §264.193(g), then:

(1) The closure plan for the tank system must include both a plan for complying with paragraph (a) of this section and a contingent plan for complying with paragraph (b) of this section.

(2) A contingent post-closure plan for complying with paragraph (b) of this section must be prepared and submitted as part of the permit application.

(3) The cost estimates calculated for closure and post-closure care must reflect the costs of complying with the contingent closure plan and the contingent post-closure plan, if those costs are greater than the costs of complying with the closure plan prepared for the expected closure under paragraph (a) of this section.

(4) Financial assurance must be based on the cost estimates in paragraph (c)(3) of this section.

(5) For the purposes of the contingent closure and post-closure plans, such a tank system is considered to be a landfill, and the contingent plans must meet all of the closure, post-closure, and financial responsibility requirements for landfills under subparts G and H of this part.

[51 FR 25472, July 14, 1986; 51 FR 29430, Aug. 15, 1986]

§ 264.198 Special requirements for ignitable or reactive wastes.

top

(a) Ignitable or reactive waste must not be placed in tank systems, unless:

(1) The waste is treated, rendered, or mixed before or immediately after placement in the tank system so that:

(i) The resulting waste, mixture, or dissolved material no longer meets the definition of ignitable or reactive waste under §§261.21 or 261.23 of this chapter, and

(ii) Section 264.17(b) is complied with; or

(2) The waste is stored or treated in such a way that it is protected from any material or conditions that may cause the waste to ignite or react; or

(3) The tank system is used solely for emergencies.

(b) The owner or operator of a facility where ignitable or reactive waste is stored or treated in a tank must comply with the requirements for the maintenance of protective distances between the waste management area and any public ways, streets, alleys, or an adjoining property line that can be built upon as required in Tables 2–1 through 2–6 of the National Fire Protection

Association's “Flammable and Combustible Liquids Code,” (1977 or 1981), (incorporated by reference, see §260.11).

§ 264.199 Special requirements for incompatible wastes.

top

(a) Incompatible wastes, or incompatible wastes and materials, must not be placed in the same tank system, unless §264.17(b) is complied with.

(b) Hazardous waste must not be placed in a tank system that has not been decontaminated and that previously held an incompatible waste or material, unless §264.17(b) is complied with.

§ 264.200 Air emission standards.

top

The owner or operator shall manage all hazardous waste placed in a tank in accordance with the applicable requirements of subparts AA, BB, and CC of this part.

[61 FR 59950, Nov. 25, 1996]

Subpart K—Surface Impoundments

top

Source: 47 FR 32357, July 26, 1982, unless otherwise noted.

§ 264.220 Applicability.

top

The regulations in this subpart apply to owners and operators of facilities that use surface impoundments to treat, store, or dispose of hazardous waste except as §264.1 provides otherwise.

§ 264.221 Design and operating requirements.

top

(a) Any surface impoundment that is not covered by paragraph (c) of this section or §265.221 of this chapter must have a liner for all portions of the impoundment (except for existing portions of such impoundments). The liner must be designed, constructed, and installed to prevent any migration of wastes out of the impoundment to the adjacent subsurface soil or ground water or surface water at any time during the active life (including the closure period) of the impoundment. The liner may be constructed of materials that may allow wastes to migrate into the liner (but not into the adjacent subsurface soil or ground water or surface water) during the active life of the facility, provided that the impoundment is closed in accordance with

§264.228(a)(1). For impoundments that will be closed in accordance with §264.228(a)(2), the liner must be constructed of materials that can prevent wastes from migrating into the liner during the active life of the facility. The liner must be:

(1) Constructed of materials that have appropriate chemical properties and sufficient strength and thickness to prevent failure due to pressure gradients (including static head and external hydrogeologic forces), physical contact with the waste or leachate to which they are exposed, climatic conditions, the stress of installation, and the stress of daily operation;

(2) Placed upon a foundation or base capable of providing support to the liner and resistance to pressure gradients above and below the liner to prevent failure of the liner due to settlement, compression, or uplift; and

(3) Installed to cover all surrounding earth likely to be in contact with the waste or leachate.

(b) The owner or operator will be exempted from the requirements of paragraph (a) of this section if the Regional Administrator finds, based on a demonstration by the owner or operator, that alternate design and operating practices, together with location characteristics, will prevent the migration of any hazardous constituents (see §264.93) into the ground water or surface water at any future time. In deciding whether to grant an exemption, the Regional Administrator will consider:

(1) The nature and quantity of the wastes;

(2) The proposed alternate design and operation;

(3) The hydrogeologic setting of the facility, including the attenuative capacity and thickness of the liners and soils present between the impoundment and ground water or surface water; and

(4) All other factors which would influence the quality and mobility of the leachate produced and the potential for it to migrate to ground water or surface water.

(c) The owner or operator of each new surface impoundment unit on which construction commences after January 29, 1992, each lateral expansion of a surface impoundment unit on which construction commences after July 29, 1992 and each replacement of an existing surface impoundment unit that is to commence reuse after July 29, 1992 must install two or more liners and a leachate collection and removal system between such liners. “Construction commences” is as defined in §260.10 of this chapter under “existing facility”.

(1)(i) The *liner system* must include:

(A) A top liner designed and constructed of materials (e.g., a geomembrane) to prevent the migration of hazardous constituents into such liner during the active life and post-closure care period; and

(B) A composite bottom liner, consisting of at least two components. The upper component must be designed and constructed of materials (e.g., a geomembrane) to prevent the migration of hazardous constituents into this component during the active life and post-closure care period. The lower component must be designed and constructed of materials to minimize the migration of hazardous constituents if a breach in the upper component were to occur. The lower component must be constructed of at least 3 feet (91 cm) of compacted soil material with a hydraulic conductivity of no more than 1×10^{-7}cm/sec.

(ii) The liners must comply with paragraphs (a) (1), (2), and (3) of this section.

(2) The *leachate collection and removal system* between the liners, and immediately above the bottom composite liner in the case of multiple leachate collection and removal systems, is also a *leak detection system.* This leak detection system must be capable of detecting, collecting, and removing leaks of hazardous constituents at the earliest practicable time through all areas of the top liner likely to be exposed to waste or leachate during the active life and post-closure care period. The requirements for a leak detection system in this paragraph are satisfied by installation of a system that is, at a minimum:

(i) Constructed with a bottom slope of one percent or more;

(ii) Constructed of granular drainage materials with a hydraulic conductivity of 1×10^{-1}cm/sec or more and a thickness of 12 inches (30.5 cm) or more; or constructed of synthetic or geonet drainage materials with a transmissivity of $3\times10^{-4}m^2$ sec or more;

(iii) Constructed of materials that are chemically resistant to the waste managed in the surface impoundment and the leachate expected to be generated, and of sufficient strength and thickness to prevent collapse under the pressures exerted by overlying wastes and any waste cover materials or equipment used at the surface impoundment;

(iv) Designed and operated to minimize clogging during the active life and post-closure care period; and

(v) Constructed with sumps and liquid removal methods (e.g., pumps) of sufficient size to collect and remove liquids from the sump and prevent liquids from backing up into the drainage layer. Each unit must have its own sump(s). The design of each sump and removal system must provide a method for measuring and recording the volume of liquids present in the sump and of liquids removed.

(3) The owner or operator shall collect and remove pumpable liquids in the sumps to minimize the head on the bottom liner.

(4) The owner or operator of a leak detection system that is not located completely above the seasonal high water table must demonstrate that the operation of the leak detection system will not be adversely affected by the presence of ground water.

(d) The Regional Administrator may approve alternative design or operating practices to those specified in paragraph (c) of this section if the owner or operator demonstrates to the Regional Administrator that such design and operating practices, together with location characteristics:

(1) Will prevent the migration of any hazardous constituent into the ground water or surface water at least as effectively as the liners and leachate collection and removal system specified in paragraph (c) of this section; and

(2) Will allow detection of leaks of hazardous constituents through the top liner at least as effectively.

(e) The double liner requirement set forth in paragraph (c) of this section may be waived by the Regional Administrator for any monofill, if:

(1) The monofill contains only hazardous wastes from foundry furnace emission controls or metal casting molding sand, and such wastes do not contain constituents which would render the wastes hazardous for reasons other than the toxicity characteristic in §261.24 of this chapter; and

(2)(i)(A) The monofill has at least one liner for which there is no evidence that such liner is leaking. For the purposes of this paragraph, the term "liner" means a liner designed, constructed, installed, and operated to prevent hazardous waste from passing into the liner at any time during the active life of the facility, or a liner designed, constructed, installed, and operated to prevent hazardous waste from migrating beyond the liner to adjacent subsurface soil, ground water, or surface water at any time during the active life of the facility. In the case of any surface impoundment which has been exempted from the requirements of paragraph (c) of this section on the basis of a liner designed, constructed, installed, and operated to prevent hazardous waste from passing beyond the liner, at the closure of such impoundment, the owner or operator must remove or decontaminate all waste residues, all contaminated liner material, and contaminated soil to the extent practicable. If all contaminated soil is not removed or decontaminated, the owner or operator of such impoundment will comply with appropriate post-closure requirements, including but not limited to ground-water monitoring and corrective action;

(B) The monofill is located more than one-quarter mile from an "underground source of drinking water" (as that term is defined in 40 CFR 270.2); and

(C) The monofill is in compliance with generally applicable ground-water monitoring requirements for facilities with permits under RCRA section 3005(c); or

(ii) The owner or operator demonstrates that the monofill is located, designed and operated so as to assure that there will be no migration of any hazardous constituent into ground water or surface water at any future time.

(f) The owner or operator of any replacement surface impoundment unit is exempt from paragraph (c) of this section if:

(1) The existing unit was constructed in compliance with the design standards of sections 3004 (o)(1)(A)(i) and (o)(5) of the Resource Conservation and Recovery Act; and

(2) There is no reason to believe that the liner is not functioning as designed.

(g) A surface impoundment must be designed, constructed, maintained, and operated to prevent overtopping resulting from normal or abnormal operations; overfilling; wind and wave action; rainfall; run-on; malfunctions of level controllers, alarms, and other equipment; and human error.

(h) A surface impoundment must have dikes that are designed, constructed, and maintained with sufficient structural integrity to prevent massive failure of the dikes. In ensuring structural integrity, it must not be presumed that the liner system will function without leakage during the active life of the unit.

(i) The Regional Administrator will specify in the permit all design and operating practices that are necessary to ensure that the requirements of this section are satisfied.

[47 FR 32357, July 26, 1982, as amended at 50 FR 4514, Jan. 31, 1985; 50 FR 28747, July 15, 1985; 57 FR 3487, Jan. 29, 1992; 71 FR 40273, July 14, 2006]

§ 264.222 Action leakage rate.

top

(a) The Regional Administrator shall approve an action leakage rate for surface impoundment units subject to §264.221 (c) or (d). The action leakage rate is the maximum design flow rate that the leak detection system (LDS) can remove without the fluid head on the bottom liner exceeding 1 foot. The action leakage rate must include an adequate safety margin to allow for uncertainties in the design (e.g., slope, hydraulic conductivity, thickness of drainage material), construction, operation, and location of the LDS, waste and leachate characteristics, likelihood and amounts of other sources of liquids in the LDS, and proposed response actions (e.g., the action leakage rate must consider decreases in the flow capacity of the system over time resulting from siltation and clogging, rib layover and creep of synthetic components of the system, overburden pressures, etc.).

(b) To determine if the action leakage rate has been exceeded, the owner or operator must convert the weekly or monthly flow rate from the monitoring data obtained under §264.226(d) to an average daily flow rate (gallons per acre per day) for each sump. Unless the Regional Administrator approves a different calculation, the average daily flow rate for each sump must be calculated weekly during the active life and closure period, and if the unit is closed in accordance with §264.228(b), monthly during the post-closure care period when monthly monitoring is required under §264.226(d).

[57 FR 3487, Jan. 29, 1992]

§ 264.223 Response actions.

top

(a) The owner or operator of surface impoundment units subject to §264.221 (c) or (d) must have an approved response action plan before receipt of waste. The response action plan must set forth the actions to be taken if the action leakage rate has been exceeded. At a minimum, the response action plan must describe the actions specified in paragraph (b) of this section.

(b) If the flow rate into the leak detection system exceeds the action leakage rate for any sump, the owner or operator must:

(1) Notify the Regional Administrator in writing of the exceedance within 7 days of the determination;

(2) Submit a preliminary written assessment to the Regional Administrator within 14 days of the determination, as to the amount of liquids, likely sources of liquids, possible location, size, and cause of any leaks, and short-term actions taken and planned;

(3) Determine to the extent practicable the location, size, and cause of any leak;

(4) Determine whether waste receipt should cease or be curtailed, whether any waste should be removed from the unit for inspection, repairs, or controls, and whether or not the unit should be closed;

(5) Determine any other short-term and longer-term actions to be taken to mitigate or stop any leaks; and

(6) Within 30 days after the notification that the action leakage rate has been exceeded, submit to the Regional Administrator the results of the analyses specified in paragraphs (b) (3), (4), and (5) of this section, the results of actions taken, and actions planned. Monthly thereafter, as long as the flow rate in the leak detection system exceeds the action leakage rate, the owner or operator must submit to the Regional Administrator a report summarizing the results of any remedial actions taken and actions planned.

(c) To make the leak and/or remediation determinations in paragraphs (b) (3), (4), and (5) of this section, the owner or operator must:

(1)(i) Assess the source of liquids and amounts of liquids by source,

(ii) Conduct a fingerprint, hazardous constituent, or other analyses of the liquids in the leak detection system to identify the source of liquids and possible location of any leaks, and the hazard and mobility of the liquid; and

(iii) Assess the seriousness of any leaks in terms of potential for escaping into the environment; or

(2) Document why such assessments are not needed.

[57 FR 3488, Jan. 29, 1992,as amended at 71 FR 40273, July 14, 2006]

§§ 264.224-264.225 [Reserved]

top

§ 264.226 Monitoring and inspection.

top

(a) During construction and installation, liners (except in the case of existing portions of surface impoundments exempt from §264.221(a)) and cover systems (e.g., membranes, sheets, or coatings) must be inspected for uniformity, damage, and imperfections (e.g., holes, cracks, thin spots, or foreign materials). Immediately after construction or installation:

(1) Synthetic liners and covers must be inspected to ensure tight seams and joints and the absence of tears, punctures, or blisters; and

(2) Soil-based and admixed liners and covers must be inspected for imperfections including lenses, cracks, channels, root holes, or other structural non-uniformities that may cause an increase in the permeability of the liner or cover.

(b) While a surface impoundment is in operation, it must be inspected weekly and after storms to detect evidence of any of the following:

(1) Deterioration, malfunctions, or improper operation of overtopping control systems;

(2) Sudden drops in the level of the impoundment's contents; and

(3) Severe erosion or other signs of deterioration in dikes or other containment devices.

(c) Prior to the issuance of a permit, and after any extended period of time (at least six months) during which the impoundment was not in service, the owner or operator must obtain a certification from a qualified engineer that the impoundment's dike, including that portion of any dike which provides freeboard, has structural integrity. The certification must establish, in particular, that the dike:

(1) Will withstand the stress of the pressure exerted by the types and amounts of wastes to be placed in the impoundment; and

(2) Will not fail due to scouring or piping, without dependence on any liner system included in the surface impoundment construction.

(d)(1) An owner or operator required to have a leak detection system under §264.221 (c) or (d) must record the amount of liquids removed from each leak detection system sump at least once each week during the active life and closure period.

(2) After the final cover is installed, the amount of liquids removed from each leak detection system sump must be recorded at least monthly. If the liquid level in the sump stays below the pump operating level for two consecutive months, the amount of liquids in the sumps must be recorded at least quarterly. If the liquid level in the sump stays below the pump operating level for two consecutive quarters, the amount of liquids in the sumps must be recorded at least semi-annually. If at any time during the post-closure care period the pump operating level is exceeded at units on quarterly or semi-annual recording schedules, the owner or operator must return to monthly recording of amounts of liquids removed from each sump until the liquid level again stays below the pump operating level for two consecutive months.

(3) “Pump operating level” is a liquid level proposed by the owner or operator and approved by the Regional Administrator based on pump activation level, sump dimensions, and level that avoids backup into the drainage layer and minimizes head in the sump.

[47 FR 32357, July 26, 1982, as amended at 50 FR 4514, Jan. 31, 1985; 50 FR 28748, July 15, 1985; 57 FR 3488, Jan. 29, 1992; 71 FR 40273, July 14, 2006]

§ 264.227 Emergency repairs; contingency plans.

top

(a) A surface impoundment must be removed from service in accordance with paragraph (b) of this section when:

(1) The level of liquids in the impoundment suddenly drops and the drop is not known to be caused by changes in the flows into or out of the impoundment; or

(2) The dike leaks.

(b) When a surface impoundment must be removed from service as required by paragraph (a) of this section, the owner or operator must:

(1) Immediately shut off the flow or stop the addition of wastes into the impoundment;

(2) Immediately contain any surface leakage which has occurred or is occurring;

(3) Immediately stop the leak;

(4) Take any other necessary steps to stop or prevent catastrophic failure;

(5) If a leak cannot be stopped by any other means, empty the impoundment; and

(6) Notify the Regional Administrator of the problem in writing within seven days after detecting the problem.

(c) As part of the contingency plan required in subpart D of this part, the owner or operator must specify a procedure for complying with the requirements of paragraph (b) of this section.

(d) No surface impoundment that has been removed from service in accordance with the requirements of this section may be restored to service unless the portion of the impoundment which was failing is repaired and the following steps are taken:

(1) If the impoundment was removed from service as the result of actual or imminent dike failure, the dike's structural integrity must be recertified in accordance with §264.226(c).

(2) If the impoundment was removed from service as the result of a sudden drop in the liquid level, then:

(i) For any existing portion of the impoundment, a liner must be installed in compliance with §264.221(a); and

(ii) For any other portion of the impoundment, the repaired liner system must be certified by a qualified engineer as meeting the design specifications approved in the permit.

(e) A surface impoundment that has been removed from service in accordance with the requirements of this section and that is not being repaired must be closed in accordance with the provisions of §264.228.

[47 FR 32357, July 26, 1982, as amended at 50 FR 28748, July 15, 1985]

§ 264.228 Closure and post-closure care.

top

(a) At closure, the owner or operator must:

(1) Remove or decontaminate all waste residues, contaminated containment system components (liners, etc.), contaminated subsoils, and structures and equipment contaminated with waste and leachate, and manage them as hazardous waste unless §261.3(d) of this chapter applies; or

(2)(i) Eliminate free liquids by removing liquid wastes or solidifying the remaining wastes and waste residues;

(ii) Stabilize remaining wastes to a bearing capacity sufficient to support final cover; and

(iii) Cover the surface impoundment with a final cover designed and constructed to:

(A) Provide long-term minimization of the migration of liquids through the closed impoundment;

(B) Function with minimum maintenance;

(C) Promote drainage and minimize erosion or abrasion of the final cover;

(D) Accommodate settling and subsidence so that the cover's integrity is maintained; and

(E) Have a permeability less than or equal to the permeability of any bottom liner system or natural subsoils present.

(b) If some waste residues or contaminated materials are left in place at final closure, the owner or operator must comply with all post-closure requirements contained in §§264.117 through 264.120, including maintenance and monitoring throughout the post- closure care period (specified in the permit under §264.117). The owner or operator must:

(1) Maintain the integrity and effectiveness of the final cover, including making repairs to the cap as necessary to correct the effects of settling, subsidence, erosion, or other events;

(2) Maintain and monitor the leak detection system in accordance with §§264.221(c)(2)(iv) and (3) and 264.226(d), and comply with all other applicable leak detection system requirements of this part;

(3) Maintain and monitor the ground-water monitoring system and comply with all other applicable requirements of subpart F of this part; and

(4) Prevent run-on and run-off from eroding or otherwise damaging the final cover.

(c)(1) If an owner or operator plans to close a surface impoundment in accordance with paragraph (a)(1) of this section, and the impoundment does not comply with the liner requirements of §264.221(a) and is not exempt from them in accordance with §264.221(b), then:

(i) The closure plan for the impoundment under §264.112 must include both a plan for complying with paragraph (a)(1) of this section and a contingent plan for complying with paragraph (a)(2) of this section in case not all contaminated subsoils can be practicably removed at closure; and

(ii) The owner or operator must prepare a contingent post-closure plan under §264.118 for complying with paragraph (b) of this section in case not all contaminated subsoils can be practicably removed at closure.

(2) The cost estimates calculated under §§264.142 and 264.144 for closure and post-closure care of an impoundment subject to this paragraph must include the cost of complying with the contingent closure plan and the contingent post-closure plan, but are not required to include the cost of expected closure under paragraph (a)(1) of this section.

[47 FR 32357, July 26, 1982, as amended at 50 FR 28748, July 15, 1985; 57 FR 3488, Jan. 29, 1992]

§ 264.229 Special requirements for ignitable or reactive waste.

top

Ignitable or reactive waste must not be placed in a surface impoundment, unless the waste and impoundment satisfy all applicable requirements of 40 CFR part 268, and:

(a) The waste is treated, rendered, or mixed before or immediately after placement in the impoundment so that:

(1) The resulting waste, mixture, or dissolution of material no longer meets the definition of ignitable or reactive waste under §261.21 or §261.23 of this chapter; and

(2) Section 264.17(b) is complied with; or

(b) The waste is managed in such a way that it is protected from any material or conditions which may cause it to ignite or react; or

(c) The surface impoundment is used solely for emergencies.

[47 FR 32357, July 26, 1982, as amended at 55 FR 22685, June 1, 1990]

§ 264.230 Special requirements for incompatible wastes.

top

Incompatible wastes, or incompatible wastes and materials, (see appendix V of this part for examples) must not be placed in the same surface impoundment, unless §264.17(b) is complied with.

§ 264.231 Special requirements for hazardous wastes FO20, FO21, FO22, FO23, FO26, and FO27.

top

(a) Hazardous Wastes FO20, FO21, FO22, FO23, FO26, and FO27 must not be placed in a surface impoundment unless the owner or operator operates the surface impoundment in accordance with a management plan for these wastes that is approved by the Regional Administrator pursuant to the standards set out in this paragraph, and in accord with all other applicable requirements of this part. The factors to be considered are:

(1) The volume, physical, and chemical characteristics of the wastes, including their potential to migrate through soil or to volatilize or escape into the atmosphere;

(2) The attenuative properties of underlying and surrounding soils or other materials;

(3) The mobilizing properties of other materials co-disposed with these wastes; and

(4) The effectiveness of additional treatment, design, or monitoring techniques.

(b) The Regional Administrator may determine that additional design, operating, and monitoring requirements are necessary for surface impoundments managing hazardous wastes FO20, FO21, FO22, FO23, FO26, and FO27 in order to reduce the possibility of migration of these wastes to ground water, surface water, or air so as to protect human health and the environment.

[50 FR 2004, Jan. 14, 1985]

§ 264.232 Air emission standards.

top

The owner or operator shall manage all hazardous waste placed in a surface impoundment in accordance with the applicable requirements of subparts BB and CC of this part.

[61 FR 59950, Nov. 25, 1996]

Subpart L—Waste Piles

top

Source: 47 FR 32359, July 26, 1982, unless otherwise noted.

§ 264.250 Applicability.

top

(a) The regulations in this subpart apply to owners and operators of facilities that store or treat hazardous waste in piles, except as §264.1 provides otherwise.

(b) The regulations in this subpart do not apply to owners or operators of waste piles that are closed with wastes left in place. Such waste piles are subject to regulation under subpart N of this part (Landfills).

(c) The owner or operator of any waste pile that is inside or under a structure that provides protection from precipitation so that neither run-off nor leachate is generated is not subject to regulation under §264.251 or under subpart F of this part, provided that:

(1) Liquids or materials containing free liquids are not placed in the pile;

(2) The pile is protected from surface water run-on by the structure or in some other manner;

(3) The pile is designed and operated to control dispersal of the waste by wind, where necessary, by means other than wetting; and

(4) The pile will not generate leachate through decomposition or other reactions.

§ 264.251 Design and operating requirements.

top

(a) A waste pile (except for an existing portion of a waste pile) must have:

(1) A liner that is designed, constructed, and installed to prevent any migration of wastes out of the pile into the adjacent subsurface soil or ground water or surface water at any time during the active life (including the closure period) of the waste pile. The liner may be constructed of materials that may allow waste to migrate into the liner itself (but not into the adjacent subsurface soil or ground water or surface water) during the active life of the facility. The liner must be:

(i) Constructed of materials that have appropriate chemical properties and sufficient strength and thickness to prevent failure due to pressure gradients (including static head and external hydrogeologic forces), physical contact with the waste or leachate to which they are exposed, climatic conditions, the stress of installation, and the stress of daily operation;

(ii) Placed upon a foundation or base capable of providing support to the liner and resistance to pressure gradients above and below the liner to prevent failure of the liner due to settlement, compression, or uplift; and

(iii) Installed to cover all surrounding earth likely to be in contact with the waste or leachate; and

(2) A leachate collection and removal system immediately above the liner that is designed, constructed, maintained, and operated to collect and remove leachate from the pile. The Regional Administrator will specify design and operating conditions in the permit to ensure that the leachate depth over the liner does not exceed 30 cm (one foot). The leachate collection and removal system must be:

(i) Constructed of materials that are:

(A) Chemically resistant to the waste managed in the pile and the leachate expected to be generated; and

(B) Of sufficient strength and thickness to prevent collapse under the pressures exerted by overlaying wastes, waste cover materials, and by any equipment used at the pile; and

(ii) Designed and operated to function without clogging through the scheduled closure of the waste pile.

(b) The owner or operator will be exempted from the requirements of paragraph (a) of this section, if the Regional Administrator finds, based on a demonstration by the owner or operator, that alternate design and operating practices, together with location characteristics, will prevent the migration of any hazardous constituents (see §264.93) into the ground water or surface water at any future time. In deciding whether to grant an exemption, the Regional Administrator will consider:

(1) The nature and quantity of the wastes;

(2) The proposed alternate design and operation;

(3) The hydrogeologic setting of the facility, including attenuative capacity and thickness of the liners and soils present between the pile and ground water or surface water; and

(4) All other factors which would influence the quality and mobility of the leachate produced and the potential for it to migrate to ground water or surface water.

(c) The owner or operator of each new waste pile unit, each lateral expansion of a waste pile unit, and each replacement of an existing waste pile unit must install two or more liners and a leachate collection and removal system above and between such liners.

(1)(i) The liner system must include:

(A) A top liner designed and constructed of materials (e.g., a geomembrane) to prevent the migration of hazardous constituents into such liner during the active life and post-closure care period; and

(B) A composite bottom liner, consisting of at least two components. The upper component must be designed and constructed of materials (e.g., a geomembrane) to prevent the migration of hazardous constituents into this component during the active life and post-closure care period. The lower component must be designed and constructed of materials to minimize the migration of hazardous constituents if a breach in the upper component were to occur. The lower component must be constructed of at least 3 feet (91 cm) of compacted soil material with a hydraulic conductivity of no more than 1×10^{-7}cm/sec.

(ii) The liners must comply with paragraphs (a)(1)(i), (ii), and (iii) of this section.

(2) The *leachate collection and removal system* immediately above the top liner must be designed, constructed, operated, and maintained to collect and remove leachate from the waste pile during the active life and post-closure care period. The Regional Administrator will specify design and operating conditions in the permit to ensure that the leachate depth over the liner does not exceed 30 cm (one foot). The leachate collection and removal system must comply with paragraphs (c)(3)(iii) and (iv) of this section.

(3) The *leachate collection and removal system* between the liners, and immediately above the bottom composite liner in the case of multiple leachate collection and removal systems, is also a *leak detection system.* This leak detection system must be capable of detecting, collecting, and removing leaks of hazardous constituents at the earliest practicable time through all areas of the top liner likely to be exposed to waste or leachate during the active life and post-closure care period. The requirements for a leak detection system in this paragraph are satisfied by installation of a system that is, at a minimum:

(i) Constructed with a bottom slope of one percent or more;

(ii) Constructed of granular drainage materials with a hydraulic conductivity of 1×10^{-2}cm/sec or more and a thickness of 12 inches (30.5 cm) or more; or constructed of synthetic or geonet drainage materials with a transmissivity of $3\times10^{-5}m^2$ /sec or more:

(iii) Constructed of materials that are chemically resistant to the waste managed in the waste pile and the leachate expected to be generated, and of sufficient strength and thickness to prevent collapse under the pressures exerted by overlying wastes, waste cover materials, and equipment used at the waste pile;

(iv) Designed and operated to minimize clogging during the active life and post-closure care period; and

(v) Constructed with sumps and liquid removal methods (e.g., pumps) of sufficient size to collect and remove liquids from the sump and prevent liquids from backing up into the drainage layer. Each unit must have its own sump(s). The design of each sump and removal system must provide a method for measuring and recording the volume of liquids present in the sump and of liquids removed.

(4) The owner or operator shall collect and remove pumpable liquids in the leak detection system sumps to minimize the head on the bottom liner.

(5) The owner or operator of a leak detection system that is not located completely above the seasonal high water table must demonstrate that the operation of the leak detection system will not be adversely affected by the presence of ground water.

(d) The Regional Administrator may approve alternative design or operating practices to those specified in paragraph (c) of this section if the owner or operator demonstrates to the Regional Administrator that such design and operating practices, together with location characteristics:

(1) Will prevent the migration of any hazardous constituent into the ground water or surface water at least as effectively as the liners and leachate collection and removal systems specified in paragraph (c) of this section; and

(2) Will allow detection of leaks of hazardous constituents through the top liner at least as effectively.

(e) Paragraph (c) of this section does not apply to monofills that are granted a waiver by the Regional Administrator in accordance with §264.221(e).

(f) The owner or operator of any replacement waste pile unit is exempt from paragraph (c) of this section if:

(1) The existing unit was constructed in compliance with the design standards of section 3004(o)(1)(A)(i) and (o)(5) of the Resource Conservation and Recovery Act; and

(2) There is no reason to believe that the liner is not functioning as designed.

(g) The owner or operator must design, construct, operate, and maintain a run-on control system capable of preventing flow onto the active portion of the pile during peak discharge from at least a 25-year storm.

(h) The owner or operator must design, construct, operate, and maintain a run-off management system to collect and control at least the water volume resulting from a 24-hour, 25-year storm.

(i) Collection and holding facilities (e.g., tanks or basins) associated with run-on and run-off control systems must be emptied or otherwise managed expeditiously after storms to maintain design capacity of the system.

(j) If the pile contains any particulate matter which may be subject to wind dispersal, the owner or operator must cover or otherwise manage the pile to control wind dispersal.

(k) The Regional Administrator will specify in the permit all design and operating practices that are necessary to ensure that the requirements of this section are satisfied.

[47 FR 32359, July 26, 1982, as amended at 50 FR 4514, Jan. 31, 1985; 57 FR 3488, Jan. 29, 1992; 71 FR 16906, Apr. 4, 2006; 71 FR 40273, July 14, 2006]

§ 264.252 Action leakage rate.

top

(a) The Regional Administrator shall approve an action leakage rate for waste pile units subject to §264.251(c) or (d). The action leakage rate is the maximum design flow rate that the leak detection system (LDS) can remove without the fluid head on the bottom liner exceeding 1 foot. The action leakage rate must include an adequate safety margin to allow for uncertainties in the design (e.g., slope, hydraulic conductivity, thickness of drainage material), construction, operation, and location of the LDS, waste and leachate characteristics, likelihood and amounts of other sources of liquids in the LDS, and proposed response actions (e.g., the action leakage rate must consider decreases in the flow capacity of the system over time resulting from siltation and clogging, rib layover and creep of synthetic components of the system, overburden pressures, etc.).

(b) To determine if the action leakage rate has been exceeded, the owner or operator must convert the weekly flow rate from the monitoring data obtained under §264.254(c) to an average daily flow rate (gallons per acre per day) for each sump. Unless the Regional Administrator approves a different calculation, the average daily flow rate for each sump must be calculated weekly during the active life and closure period.

[57 FR 3489, Jan. 29, 1992, as amended at 71 FR 40273, July 14, 2006]

§ 264.253 Response actions.

top

(a) The owner or operator of waste pile units subject to §264.251 (c) or (d) must have an approved response action plan before receipt of waste. The response action plan must set forth the actions to be taken if the action leakage rate has been exceeded. At a minimum, the response action plan must describe the actions specified in paragraph (b) of this section.

(b) If the flow rate into the leak detection system exceeds the action leakage rate for any sump, the owner or operator must:

(1) Notify the Regional Administrator in writing of the exceedance within 7 days of the determination;

(2) Submit a preliminary written assessment to the Regional Administrator within 14 days of the determination, as to the amount of liquids, likely sources of liquids, possible location, size, and cause of any leaks, and short-term actions taken and planned;

(3) Determine to the extent practicable the location, size, and cause of any leak;

(4) Determine whether waste receipt should cease or be curtailed, whether any waste should be removed from the unit for inspection, repairs, or controls, and whether or not the unit should be closed;

(5) Determine any other short-term and long-term actions to be taken to mitigate or stop any leaks; and

(6) Within 30 days after the notification that the action leakage rate has been exceeded, submit to the Regional Administrator the results of the analyses specified in paragraphs (b) (3), (4), and (5) of this section, the results of actions taken, and actions planned. Monthly thereafter, as long as the flow rate in the leak detection system exceeds the action leakage rate, the owner or operator must submit to the Regional Administrator a report summarizing the results of any remedial actions taken and actions planned.

(c) To make the leak and/or remediation determinations in paragraphs (b) (3), (4), and (5) of this section, the owner or operator must:

(1)(i) Assess the source of liquids and amounts of liquids by source,

(ii) Conduct a fingerprint, hazardous constituent, or other analyses of the liquids in the leak detection system to identify the source of liquids and possible location of any leaks, and the hazard and mobility of the liquid; and

(iii) Assess the seriousness of any leaks in terms of potential for escaping into the environment; or

(2) Document why such assessments are not needed.

[57 FR 3489, Jan. 29, 1992]

§ 264.254 Monitoring and inspection.

top

(a) During construction or installation, liners (except in the case of existing portions of piles exempt from §264.251(a)) and cover systems (*e.g.,* membranes, sheets, or coatings) must be inspected for uniformity, damage, and imperfections (*e.g.,* holes, cracks, thin spots, or foreign materials). Immediately after construction or installation:

(1) Synthetic liners and covers must be inspected to ensure tight seams and joints and the absence of tears, punctures, or blisters; and

(2) Soil-based and admixed liners and covers must be inspected for imperfections including lenses, cracks, channels, root holes, or other structural non-uniformities that may cause an increase in the permeability of the liner or cover.

(b) While a waste pile is in operation, it must be inspected weekly and after storms to detect evidence of any of the following:

(1) Deterioration, malfunctions, or improper operation of run-on and run-off control systems;

(2) Proper functioning of wind dispersal control systems, where present; and

(3) The presence of leachate in and proper functioning of leachate collection and removal systems, where present.

(c) An owner or operator required to have a leak detection system under §264.251(c) must record the amount of liquids removed from each leak detection system sump at least once each week during the active life and closure period.

[47 FR 32359, July 26, 1982, as amended at 50 FR 4514, Jan. 31, 1985; 50 FR 28748, July 15, 1985; 57 FR 3489, Jan. 29, 1992]

§ 264.255 [Reserved]

top

§ 264.256 Special requirements for ignitable or reactive waste.

top

Ignitable or reactive waste must not be placed in a waste pile unless the waste and waste pile satisfy all applicable requirements of 40 CFR part 268, and:

(a) The waste is treated, rendered, or mixed before or immediately after placement in the pile so that:

(1) The resulting waste, mixture, or dissolution of material no longer meets the definition of ignitable or reactive waste under §261.21 or §261.23 of this chapter; and

(2) Section 264.17(b) is complied with; or

(b) The waste is managed in such a way that it is protected from any material or conditions which may cause it to ignite or react.

[47 FR 32359, July 26, 1982, as amended at 55 FR 22685, June 1, 1990]

§ 264.257 Special requirements for incompatible wastes.

top

(a) Incompatible wastes, or incompatible wastes and materials, (see appendix V of this part for examples) must not be placed in the same pile, unless §264.17(b) is complied with.

(b) A pile of hazardous waste that is incompatible with any waste or other material stored nearby in containers, other piles, open tanks, or surface impoundments must be separated from the other materials, or protected from them by means of a dike, berm, wall, or other device.

(c) Hazardous waste must not be piled on the same base where incompatible wastes or materials were previously piled, unless the base has been decontaminated sufficiently to ensure compliance with §264.17(b).

§ 264.258 Closure and post-closure care.

top

(a) At closure, the owner or operator must remove or decontaminate all waste residues, contaminated containment system components (liners, etc.), contaminated subsoils, and structures and equipment contaminated with waste and leachate, and manage them as hazardous waste unless §261.3(d) of this chapter applies.

(b) If, after removing or decontaminating all residues and making all reasonable efforts to effect removal or decontamination of contaminated components, subsoils, structures, and equipment as required in paragraph (a) of this section, the owner or operator finds that not all contaminated subsoils can be practicably removed or decontaminated, he must close the facility and perform post-closure care in accordance with the closure and post-closure care requirements that apply to landfills (§264.310).

(c)(1) The owner or operator of a waste pile that does not comply with the liner requirements of §264.251(a)(1) and is not exempt from them in accordance with §264.250(c) or §264.251(b), must:

(i) Include in the closure plan for the pile under §264.112 both a plan for complying with paragraph (a) of this section and a contingent plan for complying with paragraph (b) of this section in case not all contaminated subsoils can be practicably removed at closure; and

(ii) Prepare a contingent post-closure plan under §264.118 for complying with paragraph (b) of this section in case not all contaminated subsoils can be practicably removed at closure.

(2) The cost estimates calculated under §§264.142 and 264.144 for closure and post-closure care of a pile subject to this paragraph must include the cost of complying with the contingent closure plan and the contingent post-closure plan, but are not required to include the cost of expected closure under paragraph (a) of this section.

§ 264.259 Special requirements for hazardous wastes FO20, FO21, FO22, FO23, FO26, and FO27.

top

(a) Hazardous Wastes FO20, FO21, FO22, FO23, FO26, and FO27 must not be placed in waste piles that are not enclosed (as defined in §264.250(c)) unless the owner or operator operates the waste pile in accordance with a management plan for these wastes that is approved by the Regional Administrator pursuant to the standards set out in this paragraph, and in accord with all other applicable requirements of this part. The factors to be considered are:

(1) The volume, physical, and chemical characteristics of the wastes, including their potential to migrate through soil or to volatilize or escape into the atmosphere;

(2) The attenuative properties of underlying and surrounding soils or other materials;

(3) The mobilizing properties of other materials co-disposed with these wastes; and

(4) The effectiveness of additional treatment, design, or monitoring techniques.

(b) The Regional Administrator may determine that additional design, operating, and monitoring requirements are necessary for piles managing hazardous wastes FO20, FO21, FO22, FO23, FO26, and FO27 in order to reduce the possibility of migration of these wastes to ground water, surface water, or air so as to protect human health and the environment.

[50 FR 2004, Jan. 14, 1985, as amended at 71 FR 40273, July 14, 2006]

Subpart M—Land Treatment

top

Source: 47 FR 32361, July 26, 1982, unless otherwise noted.

§ 264.270 Applicability.

top

The regulations in this subpart apply to owners and operators of facilities that treat or dispose of hazardous waste in land treatment units, except as §264.1 provides otherwise.

§ 264.271 Treatment program.

top

(a) An owner or operator subject to this subpart must establish a land treatment program that is designed to ensure that hazardous constituents placed in or on the treatment zone are degraded, transformed, or immobilized within the treatment zone. The Regional Administrator will specify in the facility permit the elements of the treatment program, including:

(1) The wastes that are capable of being treated at the unit based on a demonstration under §264.272;

(2) Design measures and operating practices necessary to maximize the success of degradation, transformation, and immobilization processes in the treatment zone in accordance with §264.273(a); and

(3) Unsaturated zone monitoring provisions meeting the requirements of §264.278.

(b) The Regional Administrator will specify in the facility permit the hazardous constituents that must be degraded, transformed, or immobilized under this subpart. Hazardous constituents are constituents identified in appendix VIII of part 261 of this chapter that are reasonably expected to be in, or derived from, waste placed in or on the treatment zone.

(c) The Regional Administrator will specify the vertical and horizontal dimensions of the treatment zone in the facility permit. The treatment zone is the portion of the unsaturated zone below and including the land surface in which the owner or operator intends to maintain the conditions necessary for effective degradation, transformation, or immobilization of hazardous constituents. The maximum depth of the treatment zone must be:

(1) No more than 1.5 meters (5 feet) from the initial soil surface; and

(2) More than 1 meter (3 feet) above the seasonal high water table.

[47 FR 32361, July 26, 1982, as amended at 50 FR 4514, Jan. 31, 1985]

§ 264.272 Treatment demonstration.

top

(a) For each waste that will be applied to the treatment zone, the owner or operator must demonstrate, prior to application of the waste, that hazardous constituents in the waste can be completely degraded, transformed, or immobilized in the treatment zone.

(b) In making this demonstration, the owner or operator may use field tests, laboratory analyses, available data, or, in the case of existing units, operating data. If the owner or operator intends to conduct field tests or laboratory analyses in order to make the demonstration required under paragraph (a) of this section, he must obtain a treatment or disposal permit under §270.63. The Regional Administrator will specify in this permit the testing, analytical, design, and operating requirements (including the duration of the tests and analyses, and, in the case of field tests, the horizontal and vertical dimensions of the treatment zone, monitoring procedures, closure and clean-up activities) necessary to meet the requirements in paragraph (c) of this section.

(c) Any field test or laboratory analysis conducted in order to make a demonstration under paragraph (a) of this section must:

(1) Accurately simulate the characteristics and operating conditions for the proposed land treatment unit including:

(i) The characteristics of the waste (including the presence of appendix VIII of part 261 of this chapter constituents);

(ii) The climate in the area;

(iii) The topography of the surrounding area;

(iv) The characteristics of the soil in the treatment zone (including depth); and

(v) The operating practices to be used at the unit.

(2) Be likely to show that hazardous constituents in the waste to be tested will be completely degraded, transformed, or immobilized in the treatment zone of the proposed land treatment unit; and

(3) Be conducted in a manner that protects human health and the environment considering:

(i) The characteristics of the waste to be tested;

(ii) The operating and monitoring measures taken during the course of the test;

(iii) The duration of the test;

(iv) The volume of waste used in the test;

(v) In the case of field tests, the potential for migration of hazardous constituents to ground water or surface water.

[47 FR 32361, July 26, 1982, as amended at 48 FR 14294, Apr. 1, 1983]

§ 264.273 Design and operating requirements.

top

The Regional Administrator will specify in the facility permit how the owner or operator will design, construct, operate, and maintain the land treatment unit in compliance with this section.

(a) The owner or operator must design, construct, operate, and maintain the unit to maximize the degradation, transformation, and immobilization of hazardous constituents in the treatment zone. The owner or operator must design, construct, operate, and maintain the unit in accord with all design and operating conditions that were used in the treatment demonstration under §264.272. At a minimum, the Regional Administrator will specify the following in the facility permit:

(1) The rate and method of waste application to the treatment zone;

(2) Measures to control soil pH;

(3) Measures to enhance microbial or chemical reactions (*e.g.,* fertilization, tilling); and

(4) Measures to control the moisture content of the treatment zone.

(b) The owner or operator must design, construct, operate, and maintain the treatment zone to minimize run-off of hazardous constituents during the active life of the land treatment unit.

(c) The owner or operator must design, construct, operate, and maintain a run-on control system capable of preventing flow onto the treatment zone during peak discharge from at least a 25-year storm.

(d) The owner or operator must design, construct, operate, and maintain a run-off management system to collect and control at least the water volume resulting from a 24-hour, 25-year storm.

(e) Collection and holding facilities (*e.g.,* tanks or basins) associated with run-on and run-off control systems must be emptied or otherwise managed expeditiously after storms to maintain the design capacity of the system.

(f) If the treatment zone contains particulate matter which may be subject to wind dispersal, the owner or operator must manage the unit to control wind dispersal.

(g) The owner or operator must inspect the unit weekly and after storms to detect evidence of:

(1) Deterioration, malfunctions, or improper operation of run-on and run-off control systems; and

(2) Improper functioning of wind dispersal control measures.

[47 FR 32361, July 26, 1982, as amended at 50 FR 4514, Jan. 31, 1985]

§§ 264.274-264.275 [Reserved]

top

§ 264.276 Food-chain crops.

top

The Regional Administrator may allow the growth of food-chain crops in or on the treatment zone only if the owner or operator satisfies the conditions of this section. The Regional Administrator will specify in the facility permit the specific food-chain crops which may be grown.

(a)(1) The owner or operator must demonstrate that there is no substantial risk to human health caused by the growth of such crops in or on the treatment zone by demonstrating, prior to the planting of such crops, that hazardous constituents other than cadmium:

(i) Will not be transferred to the food or feed portions of the crop by plant uptake or direct contact, and will not otherwise be ingested by food-chain animals (*e.g.,* by grazing); or

(ii) Will not occur in greater concentrations in or on the food or feed portions of crops grown on the treatment zone than in or on identical portions of the same crops grown on untreated soils under similar conditions in the same region.

(2) The owner or operator must make the demonstration required under this paragraph prior to the planting of crops at the facility for all constituents identified in appendix VIII of part 261 of this chapter that are reasonably expected to be in, or derived from, waste placed in or on the treatment zone.

(3) In making a demonstration under this paragraph, the owner or operator may use field tests, greenhouse studies, available data, or, in the case of existing units, operating data, and must:

(i) Base the demonstration on conditions similar to those present in the treatment zone, including soil characteristics (*e.g.,* pH, cation exchange capacity), specific wastes, application rates, application methods, and crops to be grown; and

(ii) Describe the procedures used in conducting any tests, including the sample selection criteria, sample size, analytical methods, and statistical procedures.

(4) If the owner or operator intends to conduct field tests or greenhouse studies in order to make the demonstration required under this paragraph, he must obtain a permit for conducting such activities.

(b) The owner or operator must comply with the following conditions if cadmium is contained in wastes applied to the treatment zone:

(1)(i) The pH of the waste and soil mixture must be 6.5 or greater at the time of each waste application, except for waste containing cadmium at concentrations of 2 mg/kg (dry weight) or less;

(ii) The annual application of cadmium from waste must not exceed 0.5 kilograms per hectare (kg/ha) on land used for production of tobacco, leafy vegetables, or root crops grown for human consumption. For other food-chain crops, the annual cadmium application rate must not exceed:

Time period	Annual Cd application rate (kilograms per hectare)
Present to June 30, 1984	2.0
July 1, 1984 to December 31, 1986	1.25
Beginning January 1, 1987	0.5

(iii) The cumulative application of cadmium from waste must not exceed 5 kg/ha if the waste and soil mixture has a pH of less than 6.5; and

(iv) If the waste and soil mixture has a pH of 6.5 or greater or is maintained at a pH of 6.5 or greater during crop growth, the cumulative application of cadmium from waste must not exceed: 5 kg/ha if soil cation exchange capacity (CEC) is less than 5 meq/100g; 10 kg/ha if soil CEC is 5–15 meq/100g; and 20 kg/ha if soil CEC is greater than 15 meq/100g; or

(2)(i) Animal feed must be the only food-chain crop produced;

(ii) The pH of the waste and soil mixture must be 6.5 or greater at the time of waste application or at the time the crop is planted, whichever occurs later, and this pH level must be maintained whenever food-chain crops are grown;

(iii) There must be an operating plan which demonstrates how the animal feed will be distributed to preclude ingestion by humans. The operating plan must describe the measures to be taken to safeguard against possible health hazards from cadmium entering the food chain, which may result from alternative land uses; and

(iv) Future property owners must be notified by a stipulation in the land record or property deed which states that the property has received waste at high cadmium application rates and that food-chain crops must not be grown except in compliance with paragraph (b)(2) of this section.

§ 264.277 [Reserved]

top

§ 264.278 Unsaturated zone monitoring.

top

An owner or operator subject to this subpart must establish an unsaturated zone monitoring program to discharge the following responsibilities:

(a) The owner or operator must monitor the soil and soil-pore liquid to determine whether hazardous constituents migrate out of the treatment zone.

(1) The Regional Administrator will specify the hazardous constituents to be monitored in the facility permit. The hazardous constituents to be monitored are those specified under §264.271(b).

(2) The Regional Administrator may require monitoring for principal hazardous constituents (PHCs) in lieu of the constituents specified under §264.271(b). PHCs are hazardous constituents contained in the wastes to be applied at the unit that are the most difficult to treat, considering the combined effects of degradation, transformation, and immobilization. The Regional Administrator will establish PHCs if he finds, based on waste analyses, treatment demonstrations, or other data, that effective degradation, transformation, or immobilization of the PHCs will assure treatment at at least equivalent levels for the other hazardous constituents in the wastes.

(b) The owner or operator must install an unsaturated zone monitoring system that includes soil monitoring using soil cores and soil-pore liquid monitoring using devices such as lysimeters. The unsaturated zone monitoring system must consist of a sufficient number of sampling points at appropriate locations and depths to yield samples that:

(1) Represent the quality of background soil-pore liquid quality and the chemical make-up of soil that has not been affected by leakage from the treatment zone; and

(2) Indicate the quality of soil-pore liquid and the chemical make-up of the soil below the treatment zone.

(c) The owner or operator must establish a background value for each hazardous constituent to be monitored under paragraph (a) of this section. The permit will specify the background values for each constituent or specify the procedures to be used to calculate the background values.

(1) Background soil values may be based on a one-time sampling at a background plot having characteristics similar to those of the treatment zone.

(2) Background soil-pore liquid values must be based on at least quarterly sampling for one year at a background plot having characteristics similar to those of the treatment zone.

(3) The owner or operator must express all background values in a form necessary for the determination of statistically significant increases under paragraph (f) of this section.

(4) In taking samples used in the determination of all background values, the owner or operator must use an unsaturated zone monitoring system that complies with paragraph (b)(1) of this section.

(d) The owner or operator must conduct soil monitoring and soil-pore liquid monitoring immediately below the treatment zone. The Regional Administrator will specify the frequency and timing of soil and soil-pore liquid monitoring in the facility permit after considering the frequency, timing, and rate of waste application, and the soil permeability. The owner or operator must express the results of soil and soil-pore liquid monitoring in a form necessary for the determination of statistically significant increases under paragraph (f) of this section.

(e) The owner or operator must use consistent sampling and analysis procedures that are designed to ensure sampling results that provide a reliable indication of soil-pore liquid quality and the chemical make-up of the soil below the treatment zone. At a minimum, the owner or operator must implement procedures and techniques for:

(1) Sample collection;

(2) Sample preservation and shipment;

(3) Analytical procedures; and

(4) Chain of custody control.

(f) The owner or operator must determine whether there is a statistically significant change over background values for any hazardous constituent to be monitored under paragraph (a) of this section below the treatment zone each time he conducts soil monitoring and soil-pore liquid monitoring under paragraph (d) of this section.

(1) In determining whether a statistically significant increase has occurred, the owner or operator must compare the value of each constituent, as determined under paragraph (d) of this section, to the background value for that constituent according to the statistical procedure specified in the facility permit under this paragraph.

(2) The owner or operator must determine whether there has been a statistically significant increase below the treatment zone within a reasonable time period after completion of sampling. The Regional Administrator will specify that time period in the facility permit after considering the complexity of the statistical test and the availability of laboratory facilities to perform the analysis of soil and soil-pore liquid samples.

(3) The owner or operator must determine whether there is a statistically significant increase below the treatment zone using a statistical procedure that provides reasonable confidence that migration from the treatment zone will be identified. The Regional Administrator will specify a statistical procedure in the facility permit that he finds:

(i) Is appropriate for the distribution of the data used to establish background values; and

(ii) Provides a reasonable balance between the probability of falsely identifying migration from the treatment zone and the probability of failing to identify real migration from the treatment zone.

(g) If the owner or operator determines, pursuant to paragraph (f) of this section, that there is a statistically significant increase of hazardous constituents below the treatment zone, he must:

(1) Notify the Regional Administrator of this finding in writing within seven days. The notification must indicate what constituents have shown statistically significant increases.

(2) Within 90 days, submit to the Regional Administrator an application for a permit modification to modify the operating practices at the facility in order to maximize the success of degradation, transformation, or immobilization processes in the treatment zone.

(h) If the owner or operator determines, pursuant to paragraph (f) of this section, that there is a statistically significant increase of hazardous constituents below the treatment zone, he may demonstrate that a source other than regulated units caused the increase or that the increase resulted from an error in sampling, analysis, or evaluation. While the owner or operator may make a demonstration under this paragraph in addition to, or in lieu of, submitting a permit modification application under paragraph (g)(2) of this section, he is not relieved of the requirement to submit a permit modification application within the time specified in paragraph (g)(2) of this section unless the demonstration made under this paragraph successfully shows that a source other than regulated units caused the increase or that the increase resulted from an error in sampling, analysis, or evaluation. In making a demonstration under this paragraph, the owner or operator must:

(1) Notify the Regional Administrator in writing within seven days of determining a statistically significant increase below the treatment zone that he intends to make a determination under this paragraph;

(2) Within 90 days, submit a report to the Regional Administrator demonstrating that a source other than the regulated units caused the increase or that the increase resulted from error in sampling, analysis, or evaluation;

(3) Within 90 days, submit to the Regional Administrator an application for a permit modification to make any appropriate changes to the unsaturated zone monitoring program at the facility; and

(4) Continue to monitor in accordance with the unsaturated zone monitoring program established under this section.

[47 FR 32361, July 26, 1982, as amended at 50 FR 4514, Jan. 31, 1985]

§ 264.279 Recordkeeping.

top

The owner or operator must include hazardous waste application dates and rates in the operating record required under §264.73.

[47 FR 32361, July 26, 1982, as amended at 50 FR 4514, Jan. 31, 1985]

§ 264.280 Closure and post-closure care.

top

(a) During the closure period the owner or operator must:

(1) Continue all operations (including pH control) necessary to maximize degradation, transformation, or immobilization of hazardous constituents within the treatment zone as required under §264.273(a), except to the extent such measures are inconsistent with paragraph (a)(8) of this section.

(2) Continue all operations in the treatment zone to minimize run-off of hazardous constituents as required under §264.273(b);

(3) Maintain the run-on control system required under §264.273(c);

(4) Maintain the run-off management system required under §264.273(d);

(5) Control wind dispersal of hazardous waste if required under §264.273(f);

(6) Continue to comply with any prohibitions or conditions concerning growth of food-chain crops under §264.276;

(7) Continue unsaturated zone monitoring in compliance with §264.278, except that soil-pore liquid monitoring may be terminated 90 days after the last application of waste to the treatment zone; and

(8) Establish a vegetative cover on the portion of the facility being closed at such time that the cover will not substantially impede degradation, transformation, or immobilization of hazardous constituents in the treatment zone. The vegetative cover must be capable of maintaining growth without extensive maintenance.

(b) For the purpose of complying with §264.115 of this chapter, when closure is completed the owner or operator may submit to the Regional Administrator certification by an independent, qualified soil scientist, in lieu of a qualified Professional Engineer, that the facility has been closed in accordance with the specifications in the approved closure plan.

(c) During the post-closure care period the owner or operator must:

(1) Continue all operations (including pH control) necessary to enhance degradation and transformation and sustain immobilization of hazardous constituents in the treatment zone to the extent that such measures are consistent with other post-closure care activities;

(2) Maintain a vegetative cover over closed portions of the facility;

(3) Maintain the run-on control system required under §264.273(c);

(4) Maintain the run-off management system required under §264.273(d);

(5) Control wind dispersal of hazardous waste if required under §264.273(f);

(6) Continue to comply with any prohibitions or conditions concerning growth of food-chain crops under §264.276; and

(7) Continue unsaturated zone monitoring in compliance with §264.278, excect that soil-pore liquid monitoring may be terminated 90 days after the last application of waste to the treatment zone.

(d) The owner or operator is not subject to regulation under paragraphs (a)(8) and (c) of this section if the Regional Administrator finds that the level of hazardous constituents in the treatment zone soil does not exceed the background value of those constituents by an amount that is statistically significant when using the test specified in paragraph (d)(3) of this section. The owner or operator may submit such a demonstration to the Regional Administrator at any time during the closure or post-closure care periods. For the purposes of this paragraph:

(1) The owner or operator must establish background soil values and determine whether there is a statistically significant increase over those values for all hazardous constituents specified in the facility permit under §264.271 (b).

(i) Background soil values may be based on a one-time sampling of a background plot having characteristics similar to those of the treatment zone.

(ii) The owner or operator must express background values and values for hazardous constituents in the treatment zone in a form necessary for the determination of statistically significant increases under paragraph (d)(3) of this section.

(2) In taking samples used in the determination of background and treatment zone values, the owner or operator must take samples at a sufficient number of sampling points and at appropriate locations and depths to yield samples that represent the chemical make-up of soil that has not been affected by leakage from the treatment zone and the soil within the treatment zone, respectively.

(3) In determining whether a statistically significant increase has occurred, the owner or operator must compare the value of each constituent in the treatment zone to the background value for that constituent using a statistical procedure that provides reasonable confidence that constituent presence in the treatment zone will be identified. The owner or operator must use a statistical procedure that:

(i) Is appropriate for the distribution of the data used to establish background values; and

(ii) Provides a reasonable balance between the probability of falsely identifying hazardous constituent presence in the treatment zone and the probability of failing to identify real presence in the treatment zone.

(e) The owner or operator is not subject to regulation under Subpart F of this chapter if the Regional Administrator finds that the owner or operator satisfies paragraph (d) of this section and if unsaturated zone monitoring under §264.278 indicates that hazardous constituents have not migrated beyond the treatment zone during the active life of the land treatment unit.

[47 FR 32361, July 26, 1982, as amended at 71 FR 16906, Apr. 4, 2006; 71 FR 40273, July 14, 2006]

§ 264.281 Special requirements for ignitable or reactive waste.

top

The owner or operator must not apply ignitable or reactive waste to the treatment zone unless the waste and the treatment zone meet all applicable requirements of 40 CFR part 268, and:

(a) The waste is immediately incorporated into the soil so that:

(1) The resulting waste, mixture, or dissolution of material no longer meets the definition of ignitable or reactive waste under §261.21 or §261.23 of this chapter; and

(2) Section 264.17(b) is complied with; or

(b) The waste is managed in such a way that it is protected from any material or conditions which may cause it to ignite or react.

[47 FR 32361, July 26, 1982, as amended at 55 FR 22685, June 1, 1990]

§ 264.282 Special requirements for incompatible wastes.

top

The owner or operator must not place incompatible wastes, or incompatible wastes and materials (see appendix V of this part for examples), in or on the same treatment zone, unless §264.17(b) is complied with.

§ 264.283 Special requirements for hazardous wastes FO20, FO21, FO22, FO23, FO26, and FO27.

top

(a) Hazardous Wastes FO20, FO21, FO22, FO23, FO26 and FO27 must not be placed in a land treatment unit unless the owner or operator operates the facility in accordance with a management plan for these wastes that is approved by the Regional Administrator pursuant to the

standards set out in this paragraph, and in accord with all other applicable requirements of this part. The factors to be considered are:

(1) The volume, physical, and chemical characteristics of the wastes, including their potential to migrate through soil or to volatilize or escape into the atmosphere;

(2) The attenuative properties of underlying and surrounding soils or other materials;

(3) The mobilizing properties of other materials co-disposed with these wastes; and

(4) The effectiveness of additional treatment, design, or monitoring techniques.

(b) The Regional Administrator may determine that additional design, operating, and monitoring requirements are necessary for land treatment facilities managing hazardous wastes FO20, FO21, FO22, FO23, FO26, and FO27 in order to reduce the possibility of migration of these wastes to ground water, surface water, or air so as to protect human health and the environment.

[50 FR 2004, Jan. 14, 1985, as amended at 71 FR 40273, July 14, 2006]

Subpart N—Landfills

top

Source: 47 FR 32365, July 26, 1982, unless otherwise noted.

§ 264.300 Applicability.

top

The regulations in this subpart apply to owners and operators of facilities that dispose of hazardous waste in landfills, except as §264.1 provides otherwise.

§ 264.301 Design and operating requirements.

top

(a) Any landfill that is not covered by paragraph (c) of this section or §265.301(a) of this chapter must have a liner system for all portions of the landfill (except for existing portions of such landfill). The liner system must have:

(1) A liner that is designed, constructed, and installed to prevent any migration of wastes out of the landfill to the adjacent subsurface soil or ground water or surface water at anytime during the active life (including the closure period) of the landfill. The liner must be constructed of materials that prevent wastes from passing into the liner during the active life of the facility. The liner must be:

(i) Constructed of materials that have appropriate chemical properties and sufficient strength and thickness to prevent failure due to pressure gradients (including static head and external hydrogeologic forces), physical contact with the waste or leachate to which they are exposed, climatic conditions, the stress of installation, and the stress of daily operation;

(ii) Placed upon a foundation or base capable of providing support to the liner and resistance to pressure gradients above and below the liner to prevent failure of the liner due to settlement, compression, or uplift; and

(iii) Installed to cover all surrounding earth likely to be in contact with the waste or leachate; and

(2) A leachate collection and removal system immediately above the liner that is designed, constructed, maintained, and operated to collect and remove leachate from the landfill. The Regional Administrator will specify design and operating conditions in the permit to ensure that the leachate depth over the liner does not exceed 30 cm (one foot). The leachate collection and removal system must be:

(i) Constructed of materials that are:

(A) Chemically resistant to the waste managed in the landfill and the leachate expected to be generated; and

(B) Of sufficient strength and thickness to prevent collapse under the pressures exerted by overlying wastes, waste cover materials, and by any equipment used at the landfill; and

(ii) Designed and operated to function without clogging through the scheduled closure of the landfill.

(b) The owner or operator will be exempted from the requirements of paragraph (a) of this section if the Regional Administrator finds, based on a demonstration by the owner or operator, that alternative design and operating practices, together with location characteristics, will prevent the migration of any hazardous constituents (see §264.93) into the ground water or surface water at any future time. In deciding whether to grant an exemption, the Regional Administrator will consider:

(1) The nature and quantity of the wastes;

(2) The proposed alternate design and operation;

(3) The hydrogeologic setting of the facility, including the attenuative capacity and thickness of the liners and soils present between the landfill and ground water or surface water; and

(4) All other factors which would influence the quality and mobility of the leachate produced and the potential for it to migrate to ground water or surface water.

(c) The owner or operator of each new landfill unit on which construction commences after January 29, 1992, each lateral expansion of a landfill unit on which construction commences after July 29, 1992, and each replacement of an existing landfill unit that is to commence reuse after July 29, 1992 must install two or more liners and a leachate collection and removal system above and between such liners. “Construction commences” is as defined in §260.10 of this chapter under “existing facility”.

(1)(i) The *liner system* must include:

(A) A top liner designed and constructed of materials (e.g., a geomembrane) to prevent the migration of hazardous constituents into such liner during the active life and post-closure care period; and

(B) A composite bottom liner, consisting of at least two components. The upper component must be designed and constructed of materials (e.g., a geomembrane) to prevent the migration of hazardous constituents into this component during the active life and post-closure care period. The lower component must be designed and constructed of materials to minimize the migration of hazardous constituents if a breach in the upper component were to occur. The lower component must be constructed of at least 3 feet (91 cm) of compacted soil material with a hydraulic conductivity of no more than 1×10^{-7}cm/sec.

(ii) The liners must comply with paragraphs (a)(1) (i), (ii), and (iii) of this section.

(2) The *leachate collection and removal system* immediately above the top liner must be designed, constructed, operated, and maintained to collect and remove leachate from the landfill during the active life and post-closure care period. The Regional Administrator will specify design and operating conditions in the permit to ensure that the leachate depth over the liner does not exceed 30 cm (one foot). The leachate collection and removal system must comply with paragraphs (c)(3) (iii) and (iv) of this section.

(3) The *leachate collection and removal system* between the liners, and immediately above the bottom composite liner in the case of multiple leachate collection and removal systems, is also a *leak detection system.* This leak detection system must be capable of detecting, collecting, and removing leaks of hazardous constituents at the earliest practicable time through all areas of the top liner likely to be exposed to waste or leachate during the active life and post-closure care period. The requirements for a leak detection system in this paragraph are satisfied by installation of a system that is, at a minimum:

(i) Constructed with a bottom slope of one percent or more;

(ii) Constructed of granular drainage materials with a hydraulic conductivity of 1×10^{-2}cm/sec or more and a thickness of 12 inches (30.5 cm) or more; or constructed of synthetic or geonet drainage materials with a transmissivity of $3\times10^{-5}m^2$ /sec or more;

(iii) Constructed of materials that are chemically resistant to the waste managed in the landfill and the leachate expected to be generated, and of sufficient strength and thickness to prevent

collapse under the pressures exerted by overlying wastes, waste cover materials, and equipment used at the landfill;

(iv) Designed and operated to minimize clogging during the active life and post-closure care period; and

(v) Constructed with sumps and liquid removal methods (e.g., pumps) of sufficient size to collect and remove liquids from the sump and prevent liquids from backing up into the drainage layer. Each unit must have its own sump(s). The design of each sump and removal system must provide a method for measuring and recording the volume of liquids present in the sump and of liquids removed.

(4) The owner or operator shall collect and remove pumpable liquids in the leak detection system sumps to minimize the head on the bottom liner.

(5) The owner or operator of a leak detection system that is not located completely above the seasonal high water table must demonstrate that the operation of the leak detection system will not be adversely affected by the presence of ground water.

(d) The Regional Administrator may approve alternative design or operating practices to those specified in paragraph (c) of this section if the owner or operator demonstrates to the Regional Administrator that such design and operating practices, together with location characteristics:

(1) Will prevent the migration of any hazardous constituent into the ground water or surface water at least as effectively as the liners and leachate collection and removal systems specified in paragraph (c) of this section; and

(2) Will allow detection of leaks of hazardous constituents through the top liner at least as effectively.

(e) The double liner requirement set forth in paragraph (c) of this section may be waived by the Regional Administrator for any monofill, if:

(1) The monofill contains only hazardous wastes from foundry furnace emission controls or metal casting molding sand, and such wastes do not contain constituents which would render the wastes hazardous for reasons other than the Toxicity Characteristic in §261.24 of this chapter, with EPA Hazardous Waste Numbers D004 through D017; and

(2)(i)(A) The monofill has at least one liner for which there is no evidence that such liner is leaking;

(B) The monofill is located more than one-quarter mile from an “underground source of drinking water” (as that term is defined in 40 CFR 270.2); and

(C) The monofill is in compliance with generally applicable ground-water monitoring requirements for facilities with permits under RCRA 3005(c); or

(ii) The owner or operator demonstrates that the monofill is located, designed and operated so as to assure that there will be no migration of any hazardous constituent into ground water or surface water at any future time.

(f) The owner or operator of any replacement landfill unit is exempt from paragraph (c) of this section if:

(1) The existing unit was constructed in compliance with the design standards of section 3004(o)(1)(A)(i) and (o)(5) of the Resource Conservation and Recovery Act; and

(2) There is no reason to believe that the liner is not functioning as designed.

(g) The owner or operator must design, construct, operate, and maintain a run-on control system capable of preventing flow onto the active portion of the landfill during peak discharge from at least a 25-year storm.

(h) The owner or operator must design, construct, operate, and maintain a run-off management system to collect and control at least the water volume resulting from a 24-hour, 25-year storm.

(i) Collection and holding facilities (e.g., tanks or basins) associated with run-on and run-off control systems must be emptied or otherwise managed expeditiously after storms to maintain design capacity of the system.

(j) If the landfill contains any particulate matter which may be subject to wind dispersal, the owner or operator must cover or otherwise manage the landfill to control wind dispersal.

(k) The Regional Administrator will specify in the permit all design and operating practices that are necessary to ensure that the requirements of this section are satisfied.

(l) Any permit under RCRA 3005(c) which is issued for a landfill located within the State of Alabama shall require the installation of two or more liners and a leachate collection system above and between such liners, notwithstanding any other provision of RCRA.

[47 FR 32365, July 26, 1982, as amended at 50 FR 4514, Jan. 31, 1985; 50 FR 28748, July 15, 1985; 55 FR 11875, Mar. 29, 1990; 57 FR 3489, Jan. 29, 1992; 71 FR 40273, July 14, 2006]

§ 264.302 Action leakage rate.

top

(a) The Regional Administrator shall approve an action leakage rate for landfill units subject to §264.301(c) or (d). The action leakage rate is the maximum design flow rate that the leak detection system (LDS) can remove without the fluid head on the bottom liner exceeding l foot. The action leakage rate must include an adequate safety margin to allow for uncertainties in the design (e.g., slope, hydraulic conductivity, thickness of drainage material), construction, operation, and location of the LDS, waste and leachate characteristics, likelihood and amounts of

other sources of liquids in the LDS, and proposed response actions (e.g., the action leakage rate must consider decreases in the flow capacity of the system over time resulting from siltation and clogging, rib layover and creep of synthetic components of the system, overburden pressures, etc.).

(b) To determine if the action leakage rate has been exceeded, the owner or operator must convert the weekly or monthly flow rate from the monitoring data obtained under §264.303(c) to an average daily flow rate (gallons per acre per day) for each sump. Unless the Regional Administrator approves a different calculation, the average daily flow rate for each sump must be calculated weekly during the active life and closure period, and monthly during the post-closure care period when monthly monitoring is required under §264.303(c).

[57 FR 3490, Jan. 29, 1992, as amended at 71 FR 40273, July 14, 2006]

§ 264.303 Monitoring and inspection.

top

(a) During construction or installation, liners (except in the case of existing portions of landfills exempt from §264.301(a)) and cover systems (e.g., membranes, sheets, or coatings) must be inspected for uniformity, damage, and imperfections (*e.g.,* holes, cracks, thin spots, or foreign materials). Immediately after construction or installation:

(1) Synthetic liners and covers must be inspected to ensure tight seams and joints and the absence of tears, punctures, or blisters; and

(2) Soil-based and admixed liners and covers must be inspected for imperfections including lenses, cracks, channels, root holes, or other structural non-uniformities that may cause an increase in the permeability of the liner or cover.

(b) While a landfill is in operation, it must be inspected weekly and after storms to detect evidence of any of the following:

(1) Deterioration, malfunctions, or improper operation of run-on and run-off control systems;

(2) Proper functioning of wind dispersal control systems, where present; and

(3) The presence of leachate in and proper functioning of leachate collection and removal systems, where present.

(c)(1) An owner or operator required to have a leak detection system under §264.301(c) or (d) must record the amount of liquids removed from each leak detection system sump at least once each week during the active life and closure period.

(2) After the final cover is installed, the amount of liquids removed from each leak detection system sump must be recorded at least monthly. If the liquid level in the sump stays below the

pump operating level for two consecutive months, the amount of liquids in the sumps must be recorded at least quarterly. If the liquid level in the sump stays below the pump operating level for two consecutive quarters, the amount of liquids in the sumps must be recorded at least semi-annually. If at any time during the post-closure care period the pump operating level is exceeded at units on quarterly or semi-annual recording schedules, the owner or operator must return to monthly recording of amounts of liquids removed from each sump until the liquid level again stays below the pump operating level for two consecutive months.

(3) "Pump operating level" is a liquid level proposed by the owner or operator and approved by the Regional Administrator based on pump activation level, sump dimensions, and level that avoids backup into the drainage layer and minimizes head in the sump.

[47 FR 32365, July 26, 1982, as amended at 50 FR 28748, July 15, 1985; 57 FR 3490, Jan. 29, 1992]

§ 264.304 Response actions.

top

(a) The owner or operator of landfill units subject to §264.301(c) or (d) must have an approved response action plan before receipt of waste. The response action plan must set forth the actions to be taken if the action leakage rate has been exceeded. At a minimum, the response action plan must describe the actions specified in paragraph (b) of this section.

(b) If the flow rate into the leak detection system exceeds the action leakage rate for any sump, the owner or operator must:

(1) Notify the Regional Administrator in writing of the exceedance within 7 days of the determination;

(2) Submit a preliminary written assessment to the Regional Administrator within 14 days of the determination, as to the amount of liquids, likely sources of liquids, possible location, size, and cause of any leaks, and short-term actions taken and planned;

(3) Determine to the extent practicable the location, size, and cause of any leak;

(4) Determine whether waste receipt should cease or be curtailed, whether any waste should be removed from the unit for inspection, repairs, or controls, and whether or not the unit should be closed;

(5) Determine any other short-term and longer-term actions to be taken to mitigate or stop any leaks; and

(6) Within 30 days after the notification that the action leakage rate has been exceeded, submit to the Regional Administrator the results of the analyses specified in paragraphs (b)(3), (4), and (5) of this section, the results of actions taken, and actions planned. Monthly thereafter, as long as

the flow rate in the leak detection system exceeds the action leakage rate, the owner or operator must submit to the Regional Administrator a report summarizing the results of any remedial actions taken and actions planned.

(c) To make the leak and/or remediation determinations in paragraphs (b)(3), (4), and (5) of this section, the owner or operator must:

(1)(i) Assess the source of liquids and amounts of liquids by source,

(ii) Conduct a fingerprint, hazardous constituent, or other analyses of the liquids in the leak detection system to identify the source of liquids and possible location of any leaks, and the hazard and mobility of the liquid; and

(iii) Assess the seriousness of any leaks in terms of potential for escaping into the environment; or

(2) Document why such assessments are not needed.

[57 FR 3491, Jan. 29, 1992, as amended at 71 FR 40273, July 14, 2006]

§§ 264.305-264.308 [Reserved]

top

§ 264.309 Surveying and recordkeeping.

top

The owner or operator of a landfill must maintain the following items in the operating record required under §264.73:

(a) On a map, the exact location and dimensions, including depth, of each cell with respect to permanently surveyed benchmarks; and

(b) The contents of each cell and the approximate location of each hazardous waste type within each cell.

[47 FR 32365, July 26, 1982, as amended at 50 FR 4514, Jan. 31, 1985]

§ 264.310 Closure and post-closure care.

top

(a) At final closure of the landfill or upon closure of any cell, the owner or operator must cover the landfill or cell with a final cover designed and constructed to:

(1) Provide long-term minimization of migration of liquids through the closed landfill;

(2) Function with minimum maintenance;

(3) Promote drainage and minimize erosion or abrasion of the cover;

(4) Accommodate settling and subsidence so that the cover's integrity is maintained; and

(5) Have a permeability less than or equal to the permeability of any bottom liner system or natural subsoils present.

(b) After final closure, the owner or operator must comply with all post-closure requirements contained in §§264.117 through 264.120, including maintenance and monitoring throughout the post-closure care period (specified in the permit under §264.117). The owner or operator must:

(1) Maintain the integrity and effectiveness of the final cover, including making repairs to the cap as necessary to correct the effects of settling, subsidence, erosion, or other events;

(2) Continue to operate the leachate collection and removal system until leachate is no longer detected;

(3) Maintain and monitor the leak detection system in accordance with §§264.301(c)(3)(iv) and (4) and 264.303(c), and comply with all other applicable leak detection system requirements of this part;

(4) Maintain and monitor the ground-water monitoring system and comply with all other applicable requirements of subpart F of this part;

(5) Prevent run-on and run-off from eroding or otherwise damaging the final cover; and

(6) Protect and maintain surveyed benchmarks used in complying with §264.309.

[47 FR 32365, July 26, 1982, as amended at 50 FR 28748, July 15, 1985; 57 FR 3491, Jan. 29, 1992]

§ 264.311 [Reserved]

top

§ 264.312 Special requirements for ignitable or reactive waste.

top

(a) Except as provided in paragraph (b) of this section, and in §264.316, ignitable or reactive waste must not be placed in a landfill, unless the waste and landfill meet all applicable requirements of part 268, and:

(1) The resulting waste, mixture, or dissolution of material no longer meets the definition of ignitable or reactive waste under §261.21 or §261.23 of this chapter; and

(2) Section 264.17(b) is complied with.

(b) Except for prohibited wastes which remain subject to treatment standards in subpart D of part 268, ignitable wastes in containers may be landfilled without meeting the requirements of paragraph (a) of this section, provided that the wastes are disposed of in such a way that they are protected from any material or conditions which may cause them to ignite. At a minimum, ignitable wastes must be disposed of in non-leaking containers which are carefully handled and placed so as to avoid heat, sparks, rupture, or any other condition that might cause ignition of the wastes; must be covered daily with soil or other non-combustible material to minimize the potential for ignition of the wastes; and must not be disposed of in cells that contain or will contain other wastes which may generate heat sufficient to cause ignition of the waste.

[47 FR 32365, July 26, 1982, as amended at 55 FR 22685, June 1, 1990]

§ 264.313 Special requirements for incompatible wastes.

top

Incompatible wastes, or incompatible wastes and materials, (see appendix V of this part for examples) must not be placed in the same landfill cell, unless §264.17(b) is complied with.

§ 264.314 Special requirements for bulk and containerized liquids.

top

(a) The placement of bulk or non-containerized liquid hazardous waste or hazardous waste containing free liquids (whether or not sorbents have been added) in any landfill is prohibited.

(b) To demonstrate the absence or presence of free liquids in either a containerized or a bulk waste, the following test must be used: Method 9095B (Paint Filter Liquids Test) as described in "Test Methods for Evaluating Solid Waste, Physical/Chemical Methods," EPA Publication SW–846, as incorporated by reference in §260.11 of this chapter.

(c) Containers holding free liquids must not be placed in a landfill unless:

(1) All free-standing liquid:

(i) Has been removed by decanting, or other methods;

(ii) Has been mixed with sorbent or solidified so that free-standing liquid is no longer observed; or

(iii) Has been otherwise eliminated; or

(2) The container is very small, such as an ampule; or

(3) The container is designed to hold free liquids for use other than storage, such as a battery or capacitor; or

(4) The container is a lab pack as defined in §264.316 and is disposed of in accordance with §264.316.

(d) Sorbents used to treat free liquids to be disposed of in landfills must be nonbiodegradable. Nonbiodegradable sorbents are: materials listed or described in paragraph (e)(1) of this section; materials that pass one of the tests in paragraph (e)(2) of this section; or materials that are determined by EPA to be nonbiodegradable through the part 260 petition process.

(1) Nonbiodegradable sorbents. (i) Inorganic minerals, other inorganic materials, and elemental carbon (e.g., aluminosilicates, clays, smectites, Fuller's earth, bentonite, calcium bentonite, montmorillonite, calcined montmorillonite, kaolinite, micas (illite), vermiculites, zeolites; calcium carbonate (organic free limestone); oxides/hydroxides, alumina, lime, silica (sand), diatomaceous earth; perlite (volcanic glass); expanded volcanic rock; volcanic ash; cement kiln dust; fly ash; rice hull ash; activated charcoal/activated carbon); or

(ii) High molecular weight synthetic polymers (e.g., polyethylene, high density polyethylene (HDPE), polypropylene, polystyrene, polyurethane, polyacrylate, polynorborene, polyisobutylene, ground synthetic rubber, cross-linked allylstyrene and tertiary butyl copolymers). This does not include polymers derived from biological material or polymers specifically designed to be degradable; or

(iii) Mixtures of these nonbiodegradable materials.

(2) Tests for nonbiodegradable sorbents. (i) The sorbent material is determined to be nonbiodegradable under ASTM Method G21–70 (1984a)—Standard Practice for Determining Resistance of Synthetic Polymer Materials to Fungi; or

(ii) The sorbent material is determined to be nonbiodegradable under ASTM Method G22–76 (1984b)—Standard Practice for Determining Resistance of Plastics to Bacteria; or

(iii) The sorbent material is determined to be non-biodegradable under OECD test 301B: [CO_2Evolution (Modified Sturm Test)].

(e) The placement of any liquid which is not a hazardous waste in a landfill is prohibited unless the owner or operator of such landfill demonstrates to the Regional Administrator, or the Regional Administrator determines that:

(1) The only reasonably available alternative to the placement in such landfill is placement in a landfill or unlined surface impoundment, whether or not permitted or operating under interim status, which contains, or may reasonably be anticipated to contain, hazardous waste; and

(2) Placement in such owner or operator's landfill will not present a risk of contamination of any "underground source of drinking water" (as that term is defined in 40 CFR 270.2.)

[47 FR 32365, July 26, 1982, as amended at 50 FR 18374, Apr. 30, 1985; 50 FR 28748, July 15, 1985; 57 FR 54460, Nov. 18, 1992; 58 FR 46050, Aug. 31, 1993; 60 FR 35705, July 11, 1995; 70 FR 34581, June 14, 2005; 71 FR 16906, Apr. 4, 2006; 71 FR 40273, July 14, 2006]

§ 264.315 Special requirements for containers.

top

Unless they are very small, such as an ampule, containers must be either:

(a) At least 90 percent full when placed in the landfill; or

(b) Crushed, shredded, or similarly reduced in volume to the maximum practical extent before burial in the landfill.

§ 264.316 Disposal of small containers of hazardous waste in overpacked drums (lab packs).

top

Small containers of hazardous waste in overpacked drums (lab packs) may be placed in a landfill if the following requirements are met:

(a) Hazardous waste must be packaged in non-leaking inside containers. The inside containers must be of a design and constructed of a material that will not react dangerously with, be decomposed by, or be ignited by the contained waste. Inside containers must be tightly and securely sealed. The inside containers must be of the size and type specified in the Department of Transportation (DOT) hazardous materials regulations (49 CFR parts 173, 178, and 179), if those regulations specify a particular inside container for the waste.

(b) The inside containers must be overpacked in an open head DOT-specification metal shipping container (49 CFR parts 178 and 179) of no more than 416-liter (110 gallon) capacity and surrounded by, at a minimum, a sufficient quantity of sorbent material, determined to be nonbiodegradable in accordance with §264.314(e), to completely sorb all of the liquid contents of the inside containers. The metal outer container must be full after it has been packed with inside containers and sorbent material.

(c) The sorbent material used must not be capable of reacting dangerously with, being decomposed by, or being ignited by the contents of the inside containers, in accordance with §264.17(b).

(d) Incompatible wastes, as defined in §260.10 of this chapter, must not be placed in the same outside container.

(e) Reactive wastes, other than cyanide- or sulfide-bearing waste as defined in §261.23(a)(5) of this chapter, must be treated or rendered non-reactive prior to packaging in accordance with paragraphs (a) through (d) of this section. Cyanide- and sulfide-bearing reactive waste may be packed in accordance with paragraphs (a) through (d) of this section without first being treated or rendered non-reactive.

(f) Such disposal is in compliance with the requirements of part 268. Persons who incinerate lab packs according to the requirements in 40 CFR 268.42(c)(1) may use fiber drums in place of metal outer containers. Such fiber drums must meet the DOT specifications in 49 CFR 173.12 and be overpacked according to the requirements in paragraph (b) of this section.

[47 FR 32365, July 26, 1982, as amended at 55 FR 22685, June 1, 1990; 57 FR 54460, Nov. 18, 1992]

§ 264.317 Special requirements for hazardous wastes FO20, FO21, FO22, FO23, FO26, and FO27.

top

(a) Hazardous Wastes FO20, FO21, FO22, FO23, FO26, and FO27 must not be placed in a landfill unless the owner or operator operates the landfill in accord with a management plan for these wastes that is approved by the Regional Administrator pursuant to the standards set out in this paragraph, and in accord with all other applicable requirements of this part. The factors to be considered are:

(1) The volume, physical, and chemical characteristics of the wastes, including their potential to migrate through the soil or to volatilize or escape into the atmosphere;

(2) The attenuative properties of underlying and surrounding soils or other materials;

(3) The mobilizing properties of other materials co-disposed with these wastes; and

(4) The effectiveness of additional treatment, design, or monitoring requirements.

(b) The Regional Administrator may determine that additional design, operating, and monitoring requirements are necessary for landfills managing hazardous wastes FO20, FO21, FO22, FO23, FO26, and FO27 in order to reduce the possibility of migration of these wastes to ground water, surface water, or air so as to protect human health and the environment.

[50 FR 2004, Jan. 14, 1985, as amended at 71 FR 40273, July 14, 2006]

Subpart O—Incinerators

top

§ 264.340 Applicability.

top

(a) The regulations of this subpart apply to owners and operators of hazardous waste incinerators (as defined in §260.10 of this chapter), except as §264.1 provides otherwise.

(b) *Integration of the MACT standards.* (1) Except as provided by paragraphs (b)(2) through (b)(4) of this section, the standards of this part do not apply to a new hazardous waste incineration unit that becomes subject to RCRA permit requirements after October 12, 2005; or no longer apply when an owner or operator of an existing hazardous waste incineration unit demonstrates compliance with the maximum achievable control technology (MACT) requirements of part 63, subpart EEE, of this chapter by conducting a comprehensive performance test and submitting to the Administrator a Notification of Compliance under §§63.1207(j) and 63.1210(d) of this chapter documenting compliance with the requirements of part 63, subpart EEE, of this chapter. Nevertheless, even after this demonstration of compliance with the MACT standards, RCRA permit conditions that were based on the standards of this part will continue to be in effect until they are removed from the permit or the permit is terminated or revoked, unless the permit expressly provides otherwise.

(2) The MACT standards do not replace the closure requirements of §264.351 or the applicable requirements of subparts A through H, BB and CC of this part.

(3) The particulate matter standard of §264.343(c) remains in effect for incinerators that elect to comply with the alternative to the particulate matter standard under §§63.1206(b)(14) and 63.1219(e) of this chapter.

(4) The following requirements remain in effect for startup, shutdown, and malfunction events if you elect to comply with §270.235(a)(1)(i) of this chapter to minimize emissions of toxic compounds from these events:

(i) Section 264.345(a) requiring that an incinerator operate in accordance with operating requirements specified in the permit; and

(ii) Section 264.345(c) requiring compliance with the emission standards and operating requirements during startup and shutdown if hazardous waste is in the combustion chamber, except for particular hazardous wastes.

(c) After consideration of the waste analysis included with part B of the permit application, the Regional Administrator, in establishing the permit conditions, must exempt the applicant from all requirements of this subpart except §264.341 (Waste analysis) and §264.351 (Closure),

(1) If the Regional Administrator finds that the waste to be burned is:

(i) Listed as a hazardous waste in part 261, subpart D, of this chapter solely because it is ignitable (Hazard Code I), corrosive (Hazard Code C), or both; or

(ii) Listed as a hazardous waste in part 261, subpart D, of this chapter solely because it is reactive (Hazard Code R) for characteristics other than those listed in §261.23(a) (4) and (5), and will not be burned when other hazardous wastes are present in the combustion zone; or

(iii) A hazardous waste solely because it possesses the characteristic of ignitability, corrosivity, or both, as determined by the test for characteristics of hazardous wastes under part 261, subpart C, of this chapter; or

(iv) A hazardous waste solely because it possesses any of the reactivity characteristics described by §261.23(a) (1), (2), (3), (6), (7), and (8) of this chapter, and will not be burned when other hazardous wastes are present in the combustion zone; and

(2) If the waste analysis shows that the waste contains none of the hazardous constituents listed in part 261, appendix VIII, of this chapter, which would reasonably be expected to be in the waste.

(d) If the waste to be burned is one which is described by paragraphs (b)(1)(i), (ii), (iii), or (iv) of this section and contains insignificant concentrations of the hazardous constituents listed in part 261, appendix VIII, of this chapter, then the Regional Administrator may, in establishing permit conditions, exempt the applicant from all requirements of this subpart, except §264.341 (Waste analysis) and §264.351 (Closure), after consideration of the waste analysis included with part B of the permit application, unless the Regional Administrator finds that the waste will pose a threat to human health and the environment when burned in an incinerator.

(e) The owner or operator of an incinerator may conduct trial burns subject only to the requirements of §270.62 of this chapter (Short term and incinerator permits).

[46 FR 7678, Jan. 23, 1981, as amended at 47 FR 27532, June 24, 1982; 48 FR 14295, Apr. 1, 1983; 50 FR 665, Jan. 4, 1985; 50 FR 49203, Nov. 29, 1985; 56 FR 7207, Feb. 21, 1991; 64 FR 53074, Sept. 30, 1999; 66 FR 35106, July 3, 2001; 67 FR 6815, Feb. 13, 2002; 70 FR 59575, Oct. 12, 2005; 73 FR 18983, Apr. 8, 2008]

§ 264.341 Waste analysis.

top

(a) As a portion of the trial burn plan required by §270.62 of this chapter, or with part B of the permit application, the owner or operator must have included an analysis of the waste feed sufficient to provide all information required by §270.62(b) or §270.19 of this chapter. Owners or operators of new hazardous waste incinerators must provide the information required by §270.62(c) or §270.19 of this chapter to the greatest extent possible.

(b) Throughout normal operation the owner or operator must conduct sufficient waste analysis to verify that waste feed to the incinerator is within the physical and chemical composition limits specified in his permit (under §264.345(b)).

[46 FR 7678, Jan. 23, 1981, as amended at 47 FR 27532, June 24, 1982; 48 FR 14295, Apr. 1, 1983; 48 FR 30115, June 30, 1983; 50 FR 4514, Jan. 31, 1985]

§ 264.342 Principal organic hazardous constituents (POHCs).

top

(a) Principal Organic Hazardous Constituents (POHCs) in the waste feed must be treated to the extent required by the performance standard of §264.343.

(b)(1) One or more POHCs will be specified in the facility's permit, from among those constituents listed in part 261, appendix VIII of this chapter, for each waste feed to be burned. This specification will be based on the degree of difficulty of incineration of the organic constituents in the waste and on their concentration or mass in the waste feed, considering the results of waste analyses and trial burns or alternative data submitted with part B of the facility's permit application. Organic constituents which represent the greatest degree of difficulty of incineration will be those most likely to be designated as POHCs. Constituents are more likely to be designated as POHCs if they are present in large quantities or concentrations in the waste.

(2) Trial POHCs will be designated for performance of trial burns in accordance with the procedure specified in §270.62 of this chapter for obtaining trial burn permits.

[46 FR 7678, Jan. 23, 1981, as amended at 48 FR 14295, Apr. 1, 1983]

§ 264.343 Performance standards.

top

An incinerator burning hazardous waste must be designed, constructed, and maintained so that, when operated in accordance with operating requirements specified under §264.345, it will meet the following performance standards:

(a)(1) Except as provided in paragraph (a)(2) of this section, an incinerator burning hazardous waste must achieve a destruction and removal efficiency (DRE) of 99.99% for each principal organic hazardous constituent (POHC) designated (under §264.342) in its permit for each waste feed. DRE is determined for each POHC from the following equation:

$$DRE = \frac{(W_{in} - W_{out})}{W_{in}} \times 100\%$$

where:

W_{in}=mass feed rate of one principal organic hazardous constituent (POHC) in the waste stream feeding the incinerator

and

W_{out}=mass emission rate of the same POHC present in exhaust emissions prior to release to the atmosphere.

(2) An incinerator burning hazardous wastes FO20, FO21, FO22, FO23, FO26, or FO27 must achieve a destruction and removal efficiency (DRE) of 99.9999% for each principal organic hazardous constituent (POHC) designated (under §264.342) in its permit. This performance must be demonstrated on POHCs that are more difficult to incinerate than tetra-, penta-, and hexachlorodibenzo-p-dioxins and dibenzofurans. DRE is determined for each POHC from the equation in §264.343(a)(1).

(b) An incinerator burning hazardous waste and producing stack emissions of more than 1.8 kilograms per hour (4 pounds per hour) of hydrogen chloride (HCl) must control HCl emissions such that the rate of emission is no greater than the larger of either 1.8 kilograms per hour or 1% of the HCl in the stack gas prior to entering any pollution control equipment.

(c) An incinerator burning hazardous waste must not emit particulate matter in excess of 180 milligrams per dry standard cubic meter (0.08 grains per dry standard cubic foot) when corrected for the amount of oxygen in the stack gas according to the formula:

$$P_c = P_m \times \frac{14}{21 - Y}$$

Where $P_c$is the corrected concentration of particulate matter, $P_m$is the measured concentration of particulate matter, and Y is the measured concentration of oxygen in the stack gas, using the Orsat method for oxygen analysis of dry flue gas, presented in part 60, appendix A (Method 3), of this chapter. This correction procedure is to be used by all hazardous waste incinerators except those operating under conditions of oxygen enrichment. For these facilities, the Regional Administrator will select an appropriate correction procedure, to be specified in the facility permit.

(d) For purposes of permit enforcement, compliance with the operating requirements specified in the permit (under §264.345) will be regarded as compliance with this section. However, evidence that compliance with those permit conditions is insufficient to ensure compliance with the performance requirements of this section may be “information” justifying modification, revocation, or reissuance of a permit under §270.41 of this chapter.

[46 FR 7678, Jan. 23, 1981, as amended at 47 FR 27532, June 24, 1982; 48 FR 14295, Apr. 1, 1983; 50 FR 2005, Jan. 14, 1985; 71 FR 16906, Apr. 4, 2006]

§ 264.344 Hazardous waste incinerator permits.

top

(a) The owner or operator of a hazardous waste incinerator may burn only wastes specified in his permit and only under operating conditions specified for those wastes under §264.345, except:

(1) In approved trial burns under §270.62 of this chapter; or

(2) Under exemptions created by §264.340.

(b) Other hazardous wastes may be burned only after operating conditions have been specified in a new permit or a permit modification as applicable. Operating requirements for new wastes may be based on either trial burn results or alternative data included with part B of a permit application under §270.19 of this chapter.

(c) The permit for a new hazardous waste incinerator must establish appropriate conditions for each of the applicable requirements of this subpart, including but not limited to allowable waste feeds and operating conditions necessary to meet the requirements of §264.345, sufficient to comply with the following standards:

(1) For the period beginning with initial introduction of hazardous waste to the incinerator and ending with initiation of the trial burn, and only for the minimum time required to establish operating conditions required in paragraph (c)(2) of this section, not to exceed a duration of 720 hours operating time for treatment of hazardous waste, the operating requirements must be those most likely to ensure compliance with the performance standards of §264.343, based on the Regional Administrator's engineering judgment. The Regional Administrator may extend the duration of this period once for up to 720 additional hours when good cause for the extension is demonstrated by the applicant.

(2) For the duration of the trial burn, the operating requirements must be sufficient to demonstrate compliance with the performance standards of §264.343 and must be in accordance with the approved trial burn plan;

(3) For the period immediately following completion of the trial burn, and only for the minimum period sufficient to allow sample analysis, data computation, and submission of the trial burn results by the applicant, and review of the trial burn results and modification of the facility permit by the Regional Administrator, the operating requirements must be those most likely to ensure compliance with the performance standards of §264.343, based on the Regional Administrator's engineering judgement.

(4) For the remaining duration of the permit, the operating requirements must be those demonstrated, in a trial burn or by alternative data specified in §270.19(c) of this chapter, as sufficient to ensure compliance with the performance standards of §264.343.

[46 FR 7678, Jan. 23, 1981, as amended at 47 FR 27532, June 24, 1982; 48 FR 14295, Apr. 1, 1983; 50 FR 4514, Jan. 31, 1985; 71 FR 40273, July 14, 2006]

§ 264.345 Operating requirements.

top

(a) An incinerator must be operated in accordance with operating requirements specified in the permit. These will be specified on a case-by-case basis as those demonstrated (in a trial burn or in alternative data as specified in §264.344(b) and included with part B of a facility's permit application) to be sufficient to comply with the performance standards of §264.343.

(b) Each set of operating requirements will specify the composition of the waste feed (including acceptable variations in the physical or chemical properties of the waste feed which will not affect compliance with the performance requirement of §264.343) to which the operating requirements apply. For each such waste feed, the permit will specify acceptable operating limits including the following conditions:

(1) Carbon monoxide (CO) level in the stack exhaust gas;

(2) Waste feed rate;

(3) Combustion temperature;

(4) An appropriate indicator of combustion gas velocity;

(5) Allowable variations in incinerator system design or operating procedures; and

(6) Such other operating requirements as are necessary to ensure that the performance standards of §264.343 are met.

(c) During start-up and shut-down of an incinerator, hazardous waste (except wastes exempted in accordance with §264.340) must not be fed into the incinerator unless the incinerator is operating within the conditions of operation (temperature, air feed rate, etc.) specified in the permit.

(d) Fugitive emissions from the combustion zone must be controlled by:

(1) Keeping the combustion zone totally sealed against fugitive emissions; or

(2) Maintaining a combustion zone pressure lower than atmospheric pressure; or

(3) An alternate means of control demonstrated (with part B of the permit application) to provide fugitive emissions control equivalent to maintenance of combustion zone pressure lower than atmospheric pressure.

(e) An incinerator must be operated with a functioning system to automatically cut off waste feed to the incinerator when operating conditions deviate from limits established under paragraph (a) of this section.

(f) An incinerator must cease operation when changes in waste feed, incinerator design, or operating conditions exceed limits designated in its permit.

[46 FR 7678, Jan. 23, 1981, as amended at 47 FR 27532, June 24, 1982; 50 FR 4514, Jan. 31, 1985]

§ 264.346 [Reserved]

top

§ 264.347 Monitoring and inspections.

top

(a) The owner or operator must conduct, as a minimum, the following monitoring while incinerating hazardous waste:

(1) Combustion temperature, waste feed rate, and the indicator of combustion gas velocity specified in the facility permit must be monitored on a continuous basis.

(2) CO must be monitored on a continuous basis at a point in the incinerator downstream of the combustion zone and prior to release to the atmosphere.

(3) Upon request by the Regional Administrator, sampling and analysis of the waste and exhaust emissions must be conducted to verify that the operating requirements established in the permit achieve the performance standards of §264.343.

(b) The incinerator and associated equipment (pumps, valves, conveyors, pipes, etc.) must be subjected to thorough visual inspection, at least daily, for leaks, spills, fugitive emissions, and signs of tampering.

(c) The emergency waste feed cutoff system and associated alarms must be tested at least weekly to verify operability, unless the applicant demonstrates to the Regional Administrator that weekly inspections will unduly restrict or upset operations and that less frequent inspection will be adequate. At a minimum, operational testing must be conducted at least monthly.

(d) This monitoring and inspection data must be recorded and the records must be placed in the operating record required by §264.73 of this part and maintained in the operating record for five years.

[46 FR 7678, Jan. 23, 1981, as amended at 47 FR 27533, June 24, 1982; 50 FR 4514, Jan. 31, 1985; 71 FR 16907, Apr. 4, 2006]

§§ 264.348-264.350 [Reserved]

top

§ 264.351 Closure.

top

At closure the owner or operator must remove all hazardous waste and hazardous waste residues (including, but not limited to, ash, scrubber waters, and scrubber sludges) from the incinerator site.

[*Comment:* At closure, as throughout the operating period, unless the owner or operator can demonstrate, in accordance with §261.3(d) of this chapter, that the residue removed from the incinerator is not a hazardous waste,

the owner or operator becomes a generator of hazardous waste and must manage it in accordance with applicable requirements of parts 262 through 266 of this chapter.]

[46 FR 7678, Jan. 23, 1981]

§ 262.60 Imports of hazardous waste.

Subpart G—Farmers

§ 262.70 Farmers.

Subpart H—Transfrontier Shipments of Hazardous Waste for Recovery within the OECD

§ 262.80 Applicability.
§ 262.81 Definitions.
§ 262.82 General conditions.
§ 262.83 Notification and consent.
§ 262.84 Tracking document.
§ 262.85 Contracts.
§ 262.86 Provisions relating to recognized traders.
§ 262.87 Reporting and recordkeeping.
§ 262.88 Pre-approval for U.S. Recovery Facilities. [Reserved]
§ 262.89 OECD Waste Lists.

Subpart I—New York State Public Utilities

§ 262.90 Project XL for Public Utilities in New York State.

Subpart J—University Laboratories XL Project—Laboratory Environmental Management Standard

§ 262.100 To what organizations does this subpart apply?
§ 262.101 What is in this subpart?
§ 262.102 What special definitions are included in this subpart?
§ 262.103 What is the scope of the laboratory environmental management standard?
§ 262.104 What are the minimum performance criteria?
§ 262.105 What must be included in the laboratory environmental management plan?
§ 262.106 When must a hazardous waste determination be made?
§ 262.107 Under what circumstances will a university's participation in this environmental management standard pilot be terminated?
§ 262.108 When will this subpart expire?

Subpart K—Alternative Requirements for Hazardous Waste Determination and Accumulation of Unwanted Material for Laboratories Owned by Eligible Academic Entities

§ 262.200 Definitions for this subpart.
§ 262.201 Applicability of this subpart.
§ 262.202 This subpart is optional.
§ 262.203 How an eligible academic entity indicates it will be subject to the requirements of this subpart.
§ 262.204 How an eligible academic entity indicates it will withdraw from the requirements of this subpart.
§ 262.205 Summary of the requirements of this subpart.
§ 262.206 Labeling and management standards for containers of unwanted material in the laboratory.
§ 262.207 Training.
§ 262.208 Removing containers of unwanted material from the laboratory.
§ 262.209 Where and when to make the hazardous waste determination and where to send containers of unwanted material upon removal from the laboratory.
§ 262.210 Making the hazardous waste determination in the laboratory before the unwanted material is removed from the laboratory.
§ 262.211 Making the hazardous waste determination at an on-site central accumulation area.

§ 262.212 Making the hazardous waste determination at an on-site interim status or permitted treatment, storage or disposal facility.
§ 262.213 Laboratory clean-outs.
§ 262.214 Laboratory management plan.
§ 262.215 Unwanted material that is not solid or hazardous waste.
§ 262.216 Non-laboratory hazardous waste generated at an eligible academic entity.
Appendix to Part 262—Uniform Hazardous Waste Manifest and Instructions (EPA Forms 8700–22 and 8700–22A and Their Instructions)

Authority: 42 U.S.C 6906, 6912, 6922-6925, 6937, and 6938.

Source: 45 FR 33142, May 19, 1980, unless otherwise noted.

Subpart A—General

top

§ 262.10 Purpose, scope, and applicability.

top

(a) These regulations establish standards for generators of hazardous waste.

(b) 40 CFR 261.5(c) and (d) must be used to determine the applicability of provisions of this part that are dependent on calculations of the quantity of hazardous waste generated per month.

(c) A generator who treats, stores, or disposes of hazardous waste on-site must only comply with the following sections of this part with respect to that waste: Section 262.11 for determining whether or not he has a hazardous waste, §262.12 for obtaining an EPA identification number, §262.34 for accumulation of hazardous waste, §262.40 (c) and (d) for recordkeeping, §262.43 for additional reporting, and if applicable, §262.70 for farmers.

(d) Any person who exports or imports hazardous waste subject to the Federal manifesting requirements of part 262, or subject to the universal waste management standards of 40 CFR Part 273, or subject to State requirements analogous to 40 CFR Part 273, to or from the countries listed in §262.58(a)(1) for recovery must comply with subpart H of this part.

(e) Any person who imports hazardous waste into the United States must comply with the standards applicable to generators established in this part.

(f) A farmer who generates waste pesticides which are hazardous waste and who complies with all of the requirements of §262.70 is not required to comply with other standards in this part or 40 CFR parts 270, 264, 265, or 268 with respect to such pesticides.

(g) A person who generates a hazardous waste as defined by 40 CFR part 261 is subject to the compliance requirements and penalties prescribed in section 3008 of the Act if he does not comply with the requirements of this part.

(h) An owner or operator who initiates a shipment of hazardous waste from a treatment, storage, or disposal facility must comply with the generator standards established in this part.

(i) Persons responding to an explosives or munitions emergency in accordance with 40 CFR 264.1(g)(8)(i)(D) or (iv) or 265.1(c)(11)(i)(D) or (iv), and 270.1(c)(3)(i)(D) or (iii) are not required to comply with the standards of this part.

(j) (1) Universities that are participating in the Laboratory XL project are the University of Massachusetts Boston in Boston, Massachusetts, Boston College in Chestnut Hill, Massachusetts, and the University of Vermont in Burlington, Vermont ("Universities"). The Universities generate laboratory wastes (as defined in §262.102), some of which will be hazardous wastes. As long as the Universities comply with all the requirements of subpart J of this part the Universities' laboratories that are participating in the University Laboratories XL Project as identified in Table 1 of this section, are not subject to the provisions of §§262.11, 262.34(c), 40 CFR Parts 264 and 265, and the permit requirements of 40 CFR Part 270 with respect to said laboratory wastes.

Table 1—Laboratory XL Project Participant Information

Institution	Approx. number of labs	Departments participating	Location of current hazardous waste accumulation areas
Boston College, Chestnut Hill, MA	120	Chemistry, Biology, Geology, Physics, Psychology	Merkert Chemistry Building, 2609 Beacon St., Boston, MA, Higgins Building, 140 Commonwealth Ave., Chestnut Hill, MA.
University of Massachusetts Boston, Boston, MA	150	Chemistry, Biology, Psychology, Anthropology, Geology and Earth Sciences, and Environmental, Coastal and Ocean Sciences	Science Building (Bldg. #080); McCormack Building (Bldg. #020); and Wheatley Building (Bldg. #010), 100 Morrissey Blvd., Boston, MA.
University of Vermont, Burlington, VT	400	Colleges of: Agriculture and Life Sciences, Arts and Sciences, Medicine, and Engineering and Mathematics; and Schools of: Nursing, Allied Heath Sciences, and Natural Resources	Given Bunker, 89 Beaumont Ave., Burlington, VT.

(2) Each University shall have the right to change its respective departments or the on-site location of its hazardous waste accumulation areas listed in Table 1 of this section upon written notice to the Regional Administrator for EPA-Region I and the appropriate state agency. Such written notice will be provided at least ten days prior to the effective date of any such changes.

(k) Generators in the Commonwealth of Massachusetts may comply with the State regulations regarding Class A recyclable materials in 310 C.M.R. 30.200, when authorized by the EPA under 40 CFR part 271, with respect to those recyclable materials and matters covered by the authorization, instead of complying with the hazardous waste accumulation requirements of §262.34, the reporting requirements of §262.41, the storage facility operator requirements of 40 CFR parts 264 and 265 and the permitting requirements of 40 CFR part 270. Such generators must also comply with any other applicable requirements, including any applicable authorized State regulations governing hazardous wastes not being recycled and any applicable Federal requirements which are being directly implemented by the EPA within Massachusetts pursuant to the Hazardous and Solid Waste Amendments of 1984.

(l) The laboratories owned by an eligible academic entity that chooses to be subject to the requirements of Subpart K of this part are not subject to (for purposes of this paragraph, the terms “laboratory” and “eligible academic entity” shall have the meaning as defined in §262.200 of Subpart K of this part).:

(1) The requirements of §262.11 or §262.34(c), for large quantity generators and small quantity generators, except as provided in Subpart K, and

(2) The conditions of §261.5(b), for conditionally exempt small quantity generators, except as provided in Subpart K.

Note 1: The provisions of §262.34 are applicable to the on-site accumulation of hazardous waste by generators. Therefore, the provisions of §262.34 only apply to owners or operators who are shipping hazardous waste which they generated at that facility.

Note 2: A generator who treats, stores, or disposes of hazardous waste on-site must comply with the applicable standards and permit requirements set forth in 40 CFR parts 264, 265, 266, 268, and 270.

[45 FR 33142, May 19, 1980, as amended at 45 FR 86970, Dec. 31, 1980; 47 FR 1251, Jan. 11, 1982; 48 FR 14294, Apr. 1, 1983; 53 FR 27164, July 19, 1988; 56 FR 3877, Jan. 31, 1991; 60 FR 25541, May 11, 1995; 61 FR 16309, Apr. 12, 1996; 62 FR 6651, Feb. 12, 1997; 64 FR 52392, Sept. 28, 1999; 69 FR 11813, Mar. 12, 2004; 73 FR 72954, Dec. 1, 2008]

§ 262.11 Hazardous waste determination.

top

A person who generates a solid waste, as defined in 40 CFR 261.2, must determine if that waste is a hazardous waste using the following method:

(a) He should first determine if the waste is excluded from regulation under 40 CFR 261.4.

(b) He must then determine if the waste is listed as a hazardous waste in subpart D of 40 CFR part 261.

Note: Even if the waste is listed, the generator still has an opportunity under 40 CFR 260.22 to demonstrate to the Administrator that the waste from his particular facility or operation is not a hazardous waste.

(c) For purposes of compliance with 40 CFR part 268, or if the waste is not listed in subpart D of 40 CFR part 261, the generator must then determine whether the waste is identified in subpart C of 40 CFR part 261 by either:

(1) Testing the waste according to the methods set forth in subpart C of 40 CFR part 261, or according to an equivalent method approved by the Administrator under 40 CFR 260.21; or

(2) Applying knowledge of the hazard characteristic of the waste in light of the materials or the processes used.

(d) If the waste is determined to be hazardous, the generator must refer to parts 261, 264, 265, 266, 268, and 273 of this chapter for possible exclusions or restrictions pertaining to management of the specific waste.

[45 FR 33142, May 19, 1980, as amended at 45 FR 76624, Nov. 19, 1980; 51 FR 40637, Nov. 7, 1986; 55 FR 22684, June 1, 1990; 56 FR 3877, Jan. 31, 1991; 60 FR 25541, May 11, 1995]

§ 262.12 EPA identification numbers.

top

(a) A generator must not treat, store, dispose of, transport, or offer for transportation, hazardous waste without having received an EPA identification number from the Administrator.

(b) A generator who has not received an EPA identification number may obtain one by applying to the Administrator using EPA form 8700–12. Upon receiving the request the Administrator will assign an EPA identification number to the generator.

(c) A generator must not offer his hazardous waste to transporters or to treatment, storage, or disposal facilities that have not received an EPA identification number.

Subpart B—The Manifest

top

§ 262.20 General requirements.

top

(a)(1) A generator who transports, or offers for transport a hazardous waste for offsite treatment, storage, or disposal, or a treatment, storage, and disposal facility who offers for transport a

rejected hazardous waste load, must prepare a Manifest (OMB Control number 2050–0039) on EPA Form 8700–22, and, if necessary, EPA Form 8700–22A, according to the instructions included in the appendix to this part.

(2) The revised manifest form and procedures in 40 CFR 260.10, 261.7, 262.20, 262.21, 262.27, 262.32, 262.34, 262.54, 262.60, and the appendix to part 262, shall not apply until September 5, 2006. The manifest form and procedures in 40 CFR 260.10, 261.7, 262.20, 262.21, 262.32, 262.34, 262.54, 262.60, and the Appendix to part 262, contained in the 40 CFR, parts 260 to 265, edition revised as of July 1, 2004, shall be applicable until September 5, 2006.

(b) A generator must designate on the manifest one facility which is permitted to handle the waste described on the manifest.

(c) A generator may also designate on the manifest one alternate facility which is permitted to handle his waste in the event an emergency prevents delivery of the waste to the primary designated facility.

(d) If the transporter is unable to deliver the hazardous waste to the designated facility or the alternate facility, the generator must either designate another facility or instruct the transporter to return the waste.

(e) The requirements of this subpart do not apply to hazardous waste produced by generators of greater than 100 kg but less than 1000 kg in a calendar month where:

(1) The waste is reclaimed under a contractual agreement pursuant to which:

(i) The type of waste and frequency of shipments are specified in the agreement;

(ii) The vehicle used to transport the waste to the recycling facility and to deliver regenerated material back to the generator is owned and operated by the reclaimer of the waste; and

(2) The generator maintains a copy of the reclamation agreement in his files for a period of at least three years after termination or expiration of the agreement.

(f) The requirements of this subpart and §262.32(b) do not apply to the transport of hazardous wastes on a public or private right-of-way within or along the border of contiguous property under the control of the same person, even if such contiguous property is divided by a public or private right-of-way. Notwithstanding 40 CFR 263.10(a), the generator or transporter must comply with the requirements for transporters set forth in 40 CFR 263.30 and 263.31 in the event of a discharge of hazardous waste on a public or private right-of-way.

[45 FR 33142, May 19, 1980, as amended at 49 FR 10500, Mar. 20, 1984; 51 FR 10175, Mar. 24, 1986; 53 FR 45090, Nov. 8, 1988; 62 FR 6651, Feb. 12, 1997; 70 FR 10815, Mar. 4, 2005; 70 FR 35037, June 16, 2005]

§ 262.21 Manifest tracking numbers, manifest printing, and obtaining manifests.

top

(a)(1) A registrant may not print, or have printed, the manifest for use of distribution unless it has received approval from the EPA Director of the Office of Resource Conservation and Recovery to do so under paragraphs (c) and (e) of this section.

(2) The approved registrant is responsible for ensuring that the organizations identified in its application are in compliance with the procedures of its approved application and the requirements of this section. The registrant is responsible for assigning manifest tracking numbers to its manifests.

(b) A registrant must submit an initial application to the EPA Director of the Office of Resource Conservation and Recovery that contains the following information:

(1) Name and mailing address of registrant;

(2) Name, telephone number and email address of contact person;

(3) Brief description of registrant's government or business activity;

(4) EPA identification number of the registrant, if applicable;

(5) Description of the scope of the operations that the registrant plans to undertake in printing, distributing, and using its manifests, including:

(i) A description of the printing operation. The description should include an explanation of whether the registrant intends to print its manifests in-house (*i.e.* , using its own printing establishments) or through a separate (*i.e.* , unaffiliated) printing company. If the registrant intends to use a separate printing company to print the manifest on its behalf, the application must identify this printing company and discuss how the registrant will oversee the company. If this includes the use of intermediaries (e.g., prime and subcontractor relationships), the role of each must be discussed. The application must provide the name and mailing address of each company. It also must provide the name and telephone number of the contact person at each company.

(ii) A description of how the registrant will ensure that its organization and unaffiliated companies, if any, comply with the requirements of this section. The application must discuss how the registrant will ensure that a unique manifest tracking number will be pre-printed on each manifest. The application must describe the internal control procedures to be followed by the registrant and unaffiliated companies to ensure that numbers are tightly controlled and remain unique. In particular, the application must describe how the registrant will assign manifest tracking numbers to its manifests. If computer systems or other infrastructure will be used to maintain, track, or assign numbers, these should be indicated. The application must also indicate how the printer will pre-print a unique number on each form (e.g., crash or press numbering). The application also must explain the other quality procedures to be followed by each establishment and printing company to ensure that all required print specifications are

consistently achieved and that printing violations are identified and corrected at the earliest practicable time.

(iii) An indication of whether the registrant intends to use the manifests for its own business operations or to distribute the manifests to a separate company or to the general public (e.g., for purchase).

(6) A brief description of the qualifications of the company that will print the manifest. The registrant may use readily available information to do so (e.g., corporate brochures, product samples, customer references, documentation of ISO certification), so long as such information pertains to the establishments or company being proposed to print the manifest.

(7) Proposed unique three-letter manifest tracking number suffix. If the registrant is approved to print the manifest, the registrant must use this suffix to pre-print a unique manifest tracking number on each manifest.

(8) A signed certification by a duly authorized employee of the registrant that the organizations and companies in its application will comply with the procedures of its approved application and the requirements of this section and that it will notify the EPA Director of the Office of Resource Conservation and Recovery of any duplicated manifest tracking numbers on manifests that have been used or distributed to other parties as soon as this becomes known.

(c) EPA will review the application submitted under paragraph (b) of this section and either approve it or request additional information or modification before approving it.

(d)(1) Upon EPA approval of the application under paragraph (c) of this section, EPA will provide the registrant an electronic file of the manifest, continuation sheet, and manifest instructions and ask the registrant to submit three fully assembled manifests and continuation sheet samples, except as noted in paragraph (d)(3) of this section. The registrant's samples must meet all of the specifications in paragraph (f) of this section and be printed by the company that will print the manifest as identified in the application approved under paragraph (c) of this section.

(2) The registrant must submit a description of the manifest samples as follows:

(i) Paper type (*i.e.* , manufacturer and grade of the manifest paper);

(ii) Paper weight of each copy;

(iii) Ink color of the manifest's instructions. If screening of the ink was used, the registrant must indicate the extent of the screening; and

(iv) Method of binding the copies.

(3) The registrant need not submit samples of the continuation sheet if it will print its continuation sheet using the same paper type, paper weight of each copy, ink color of the instructions, and binding method as its manifest form samples.

(e) EPA will evaluate the forms and either approve the registrant to print them as proposed or request additional information or modification to them before approval. EPA will notify the registrant of its decision by mail. The registrant cannot use or distribute its forms until EPA approves them. An approved registrant must print the manifest and continuation sheet according to its application approved under paragraph (c) of this section and the manifest specifications in paragraph (f) of this section. It also must print the forms according to the paper type, paper weight, ink color of the manifest instructions and binding method of its approved forms.

(f) Paper manifests and continuation sheets must be printed according to the following specifications:

(1) The manifest and continuation sheet must be printed with the exact format and appearance as EPA Forms 8700–22 and 8700–22A, respectively. However, information required to complete the manifest may be pre-printed on the manifest form.

(2) A unique manifest tracking number assigned in accordance with a numbering system approved by EPA must be pre-printed in Item 4 of the manifest. The tracking number must consist of a unique three-letter suffix following nine digits.

(3) The manifest and continuation sheet must be printed on 81/2× 11-inch white paper, excluding common stubs (e.g., top- or side-bound stubs). The paper must be durable enough to withstand normal use.

(4) The manifest and continuation sheet must be printed in black ink that can be legibly photocopied, scanned, and faxed, except that the marginal words indicating copy distribution must be in red ink.

(5) The manifest and continuation sheet must be printed as six-copy forms. Copy-to-copy registration must be exact within1/32nd of an inch. Handwritten and typed impressions on the form must be legible on all six copies. Copies must be bound together by one or more common stubs that reasonably ensure that they will not become detached inadvertently during normal use.

(6) Each copy of the manifest and continuation sheet must indicate how the copy must be distributed, as follows:

(i) Page 1 (top copy): “Designated facility to destination State (if required)”.

(ii) Page 2: “Designated facility to generator State (if required)”.

(iii) Page 3: “Designated facility to generator”.

(iv) Page 4: “Designated facility's copy”.

(v) Page 5: “Transporter's copy”.

(vi) Page 6 (bottom copy): “Generator's initial copy”.

(7) The instructions in the appendix to 40 CFR part 262 must appear legibly on the back of the copies of the manifest and continuation sheet as provided in this paragraph (f). The instructions must not be visible through the front of the copies when photocopied or faxed.

(i) Manifest Form 8700–22.

(A) The “Instructions for Generators” on Copy 6;

(B) The “Instructions for International Shipment Block” and “Instructions for Transporters” on Copy 5; and

(C) The “Instructions for Treatment, Storage, and Disposal Facilities” on Copy 4.

(ii) Manifest Form 8700–22A.

(A) The “Instructions for Generators” on Copy 6;

(B) The “Instructions for Transporters” on Copy 5; and

(C) The “Instructions for Treatment, Storage, and Disposal Facilities” on Copy 4.

(g)(1) A generator may use manifests printed by any source so long as the source of the printed form has received approval from EPA to print the manifest under paragraphs (c) and (e) of this section. A registered source may be a:

(i) State agency;

(ii) Commercial printer;

(iii) Hazardous waste generator, transporter or TSDF; or

(iv) Hazardous waste broker or other preparer who prepares or arranges shipments of hazardous waste for transportation.

(2) A generator must determine whether the generator state or the consignment state for a shipment regulates any additional wastes (beyond those regulated Federally) as hazardous wastes under these states' authorized programs. Generators also must determine whether the consignment state or generator state requires the generator to submit any copies of the manifest to these states. In cases where the generator must supply copies to either the generator's state or the consignment state, the generator is responsible for supplying legible photocopies of the manifest to these states.

(h)(1) If an approved registrant would like to update any of the information provided in its application approved under paragraph (c) of this section (e.g., to update a company phone number or name of contact person), the registrant must revise the application and submit it to the EPA Director of the Office of Resource Conservation and Recovery, along with an indication or explanation of the update, as soon as practicable after the change occurs. The Agency either will approve or deny the revision. If the Agency denies the revision, it will explain the reasons for the denial, and it will contact the registrant and request further modification before approval.

(2) If the registrant would like a new tracking number suffix, the registrant must submit a proposed suffix to the EPA Director of the Office of Resource Conservation and Recovery, along with the reason for requesting it. The Agency will either approve the suffix or deny the suffix and provide an explanation why it is not acceptable.

(3) If a registrant would like to change the paper type, paper weight, ink color of the manifest instructions, or binding method of its manifest or continuation sheet subsequent to approval under paragraph (e) of this section, then the registrant must submit three samples of the revised form for EPA review and approval. If the approved registrant would like to use a new printer, the registrant must submit three manifest samples printed by the new printer, along with a brief description of the printer's qualifications to print the manifest. EPA will evaluate the manifests and either approve the registrant to print the forms as proposed or request additional information or modification to them before approval. EPA will notify the registrant of its decision by mail. The registrant cannot use or distribute its revised forms until EPA approves them.

(i) If, subsequent to its approval under paragraph (e) of this section, a registrant typesets its manifest or continuation sheet instead of using the electronic file of the forms provided by EPA, it must submit three samples of the manifest or continuation sheet to the registry for approval. EPA will evaluate the manifests or continuation sheets and either approve the registrant to print them as proposed or request additional information or modification to them before approval. EPA will notify the registrant of its decision by mail. The registrant cannot use or distribute its typeset forms until EPA approves them.

(j) EPA may exempt a registrant from the requirement to submit form samples under paragraph (d) or (h)(3) of this section if the Agency is persuaded that a separate review of the registrant's forms would serve little purpose in informing an approval decision (e.g., a registrant certifies that it will print the manifest using the same paper type, paper weight, ink color of the instructions and binding method of the form samples approved for some other registrant). A registrant may request an exemption from EPA by indicating why an exemption is warranted.

(k) An approved registrant must notify EPA by phone or email as soon as it becomes aware that it has duplicated tracking numbers on any manifests that have been used or distributed to other parties.

(l) If, subsequent to approval of a registrant under paragraph (e) of this section, EPA becomes aware that the approved paper type, paper weight, ink color of the instructions, or binding method of the registrant's form is unsatisfactory, EPA will contact the registrant and require modifications to the form.

(m)(1) EPA may suspend and, if necessary, revoke printing privileges if we find that the registrant:

(i) Has used or distributed forms that deviate from its approved form samples in regard to paper weight, paper type, ink color of the instructions, or binding method; or

(ii) Exhibits a continuing pattern of behavior in using or distributing manifests that contain duplicate manifest tracking numbers.

(2) EPA will send a warning letter to the registrant that specifies the date by which it must come into compliance with the requirements. If the registrant does not come in compliance by the specified date, EPA will send a second letter notifying the registrant that EPA has suspended or revoked its printing privileges. An approved registrant must provide information on its printing activities to EPA if requested.

[70 FR 10815, Mar. 4, 2005, as amended at 74 FR 30230, June 25, 2009]

§ 262.22 Number of copies.

top

The manifest consists of at least the number of copies which will provide the generator, each transporter, and the owner or operator of the designated facility with one copy each for their records and another copy to be returned to the generator.

§ 262.23 Use of the manifest.

top

(a) The generator must:

(1) Sign the manifest certification by hand; and

(2) Obtain the handwritten signature of the initial transporter and date of acceptance on the manifest; and

(3) Retain one copy, in accordance with §262.40(a).

(b) The generator must give the transporter the remaining copies of the manifest.

(c) For shipments of hazardous waste within the United States solely by water (bulk shipments only), the generator must send three copies of the manifest dated and signed in accordance with this section to the owner or operator of the designated facility or the last water (bulk shipment) transporter to handle the waste in the United States if exported by water. Copies of the manifest are not required for each transporter.

(d) For rail shipments of hazardous waste within the United States which originate at the site of generation, the generator must send at least three copies of the manifest dated and signed in accordance with this section to:

(1) The next non-rail transporter, if any; or

(2) The designated facility if transported solely by rail; or

(3) The last rail transporter to handle the waste in the United States if exported by rail.

(e) For shipments of hazardous waste to a designated facility in an authorized State which has not yet obtained authorization to regulate that particular waste as hazardous, the generator must assure that the designated facility agrees to sign and return the manifest to the generator, and that any out-of-state transporter signs and forwards the manifest to the designated facility.

Note: See §263.20(e) and (f) for special provisions for rail or water (bulk shipment) transporters.

[45 FR 33142, May 19, 1980, as amended at 45 FR 86973, Dec. 31, 1980; 55 FR 2354, Jan. 23, 1990]

§ 262.27 Waste minimization certification.

top

A generator who initiates a shipment of hazardous waste must certify to one of the following statements in Item 15 of the uniform hazardous waste manifest:

(a) “I am a large quantity generator. I have a program in place to reduce the volume and toxicity of waste generated to the degree I have determined to be economically practicable and I have selected the practicable method of treatment, storage, or disposal currently available to me which minimizes the present and future threat to human health and the environment;” or

(b) “I am a small quantity generator. I have made a good faith effort to minimize my waste generation and select the best waste management method that is available to me and that I can afford.”

[70 FR 10817, Mar. 4, 2005]

Subpart C—Pre-Transport Requirements

top

§ 262.30 Packaging.

top

Before transporting hazardous waste or offering hazardous waste for transportation off-site, a generator must package the waste in accordance with the applicable Department of Transportation regulations on packaging under 49 CFR parts 173, 178, and 179.

§ 262.31 Labeling.

top

Before transporting or offering hazardous waste for transportation off-site, a generator must label each package in accordance with the applicable Department of Transportation regulations on hazardous materials under 49 CFR part 172.

§ 262.32 Marking.

top

(a) Before transporting or offering hazardous waste for transportation off-site, a generator must mark each package of hazardous waste in accordance with the applicable Department of Transportation regulations on hazardous materials under 49 CFR part 172;

(b) Before transporting hazardous waste or offering hazardous waste for transportation off-site, a generator must mark each container of 119 gallons or less used in such transportation with the following words and information in accordance with the requirements of 49 CFR 172.304:

HAZARDOUS WASTE—Federal Law Prohibits Improper Disposal. If found, contact the nearest police or public safety authority or the U.S. Environmental Protection Agency.

Generator's Name and Address _____.

Generator's EPA Identification Number

_____.

Manifest Tracking Number _____.

[45 FR 33142, May 19, 1980, as amended at 70 FR 10817, Mar. 4, 2005]

§ 262.33 Placarding.

top

Before transporting hazardous waste or offering hazardous waste for transportation off-site, a generator must placard or offer the initial transporter the appropriate placards according to Department of Transportation regulations for hazardous materials under 49 CFR part 172, subpart F.

[70 FR 35037, June 16, 2005]

§ 262.34 Accumulation time.

top

(a) Except as provided in paragraphs (d), (e), and (f) of this section, a generator may accumulate hazardous waste on-site for 90 days or less without a permit or without having interim status, provided that:

(1) The waste is placed:

(i) In containers and the generator complies with the applicable requirements of subparts I, AA, BB, and CC of 40 CFR part 265; and/or

(ii) In tanks and the generator complies with the applicable requirements of subparts J, AA, BB, and CC of 40 CFR part 265 except §§265.197(c) and 265.200; and/or

(iii) On drip pads and the generator complies with subpart W of 40 CFR part 265 and maintains the following records at the facility:

(A) A description of procedures that will be followed to ensure that all wastes are removed from the drip pad and associated collection system at least once every 90 days; and

(B) Documentation of each waste removal, including the quantity of waste removed from the drip pad and the sump or collection system and the date and time of removal; and/or

(iv) In containment buildings and the generator complies with subpart DD of 40 CFR part 265, has placed its professional engineer certification that the building complies with the design standards specified in 40 CFR 265.1101 in the facility's operating record no later than 60 days after the date of initial operation of the unit. After February 18, 1993, PE certification will be required prior to operation of the unit. The owner or operator shall maintain the following records at the facility:

(A) A written description of procedures to ensure that each waste volume remains in the unit for no more than 90 days, a written description of the waste generation and management practices for the facility showing that they are consistent with respecting the 90 day limit, and documentation that the procedures are complied with; or

(B) Documentation that the unit is emptied at least once every 90 days.

In addition, such a generator is exempt from all the requirements in subparts G and H of 40 CFR part 265, except for §§265.111 and 265.114.

(2) The date upon which each period of accumulation begins is clearly marked and visible for inspection on each container;

(3) While being accumulated on-site, each container and tank is labeled or marked clearly with the words, “Hazardous Waste”; and

(4) The generator complies with the requirements for owners or operators in Subparts C and D in 40 CFR part 265, with §265.16, and with 40 CFR 268.7(a)(5).

(b) A generator who accumulates hazardous waste for more than 90 days is an operator of a storage facility and is subject to the requirements of 40 CFR parts 264 and 265 and the permit requirements of 40 CFR part 270 unless he has been granted an extension to the 90-day period. Such extension may be granted by EPA if hazardous wastes must remain on-site for longer than 90 days due to unforeseen, temporary, and uncontrollable circumstances. An extension of up to 30 days may be granted at the discretion of the Regional Administrator on a case-by-case basis.

(c)(1) A generator may accumulate as much as 55 gallons of hazardous waste or one quart of acutely hazardous waste listed in §261.33(e) in containers at or near any point of generation where wastes initially accumulate, which is under the control of the operator of the process generating the waste, without a permit or interim status and without complying with paragraph (a) of this section provided he:

(i) Complies with §§265.171, 265.172, and 265.173(a) of this chapter; and

(ii) Marks his containers either with the words “Hazardous Waste” or with other words that identify the contents of the containers.

(2) A generator who accumulates either hazardous waste or acutely hazardous waste listed in §261.33(e) in excess of the amounts listed in paragraph (c)(1) of this section at or near any point of generation must, with respect to that amount of excess waste, comply within three days with paragraph (a) of this section or other applicable provisions of this chapter. During the three day period the generator must continue to comply with paragraphs (c)(1)(i) through (ii) of this section. The generator must mark the container holding the excess accumulation of hazardous waste with the date the excess amount began accumulating.

(d) A generator who generates greater than 100 kilograms but less than 1000 kilograms of hazardous waste in a calendar month may accumulate hazardous waste on-site for 180 days or less without a permit or without having interim status provided that:

(1) The quantity of waste accumulated on-site never exceeds 6000 kilograms;

(2) The generator complies with the requirements of subpart I of part 265 of this chapter, except for §§265.176 and 265.178;

(3) The generator complies with the requirements of §265.201 in subpart J of part 265;

(4) The generator complies with the requirements of paragraphs (a)(2) and (a)(3) of this section, the requirements of subpart C of part 265, the requirements of 40 CFR 268.7(a)(5); and

(5) The generator complies with the following requirements:

(i) At all times there must be at least one employee either on the premises or on call (*i.e.*, available to respond to an emergency by reaching the facility within a short period of time) with the responsibility for coordinating all emergency response measures specified in paragraph (d)(5)(iv) of this section. This employee is the emergency coordinator.

(ii) The generator must post the following information next to the telephone:

(A) The name and telephone number of the emergency coordinator;

(B) Location of fire extinguishers and spill control material, and, if present, fire alarm; and

(C) The telephone number of the fire department, unless the facility has a direct alarm.

(iii) The generator must ensure that all employees are thoroughly familiar with proper waste handling and emergency procedures, relevant to their responsibilities during normal facility operations and emergencies;

(iv) The emergency coordinator or his designee must respond to any emergencies that arise. The applicable responses are as follows:

(A) In the event of a fire, call the fire department or attempt to extinguish it using a fire extinguisher;

(B) In the event of a spill, contain the flow of hazardous waste to the extent possible, and as soon as is practicable, clean up the hazardous waste and any contaminated materials or soil;

(C) In the event of a fire, explosion, or other release which could threaten human health outside the facility or when the generator has knowledge that a spill has reached surface water, the generator must immediately notify the National Response Center (using their 24-hour toll free number 800/424–8802). The report must include the following information:

(*1*) The name, address, and U.S. EPA IdentificationNumberofthegenerator;

(*2*) Date, time, and type of incident (e.g., spill or fire);

(*3*) Quantity and type of hazardous waste involved in the incident;

(*4*) Extent of injuries, if any; and

(*5*) Estimated quantity and disposition of recovered materials, if any.

(e) A generator who generates greater than 100 kilograms but less than 1000 kilograms of hazardous waste in a calendar month and who must transport his waste, or offer his waste for transportation, over a distance of 200 miles or more for off-site treatment, storage or disposal

may accumulate hazardous waste on-site for 270 days or less without a permit or without having interim status provided that he complies with the requirements of paragraph (d) of this section.

(f) A generator who generates greater than 100 kilograms but less than 1000 kilograms of hazardous waste in a calendar month and who accumulates hazardous waste in quantities exceeding 6000 kg or accumulates hazardous waste for more than 180 days (or for more than 270 days if he must transport his waste, or offer his waste for transportation, over a distance of 200 miles or more) is an operator of a storage facility and is subject to the requirements of 40 CFR parts 264 and 265 and the permit requirements of 40 CFR part 270 unless he has been granted an extension to the 180-day (or 270-day if applicable) period. Such extension may be granted by EPA if hazardous wastes must remain on-site for longer than 180 days (or 270 days if applicable) due to unforeseen, temporary, and uncontrollable circumstances. An extension of up to 30 days may be granted at the discretion of the Regional Administrator on a case-by-case basis.

(g) A generator who generates 1,000 kilograms or greater of hazardous waste per calendar month who also generates wastewater treatment sludges from electroplating operations that meet the listing description for the RCRA hazardous waste code F006, may accumulate F006 waste on-site for more than 90 days, but not more than 180 days without a permit or without having interim status provided that:

(1) The generator has implemented pollution prevention practices that reduce the amount of any hazardous substances, pollutants or contaminants entering F006 or otherwise released to the environment prior to its recycling;

(2) The F006 waste is legitimately recycled through metals recovery;

(3) No more than 20,000 kilograms of F006 waste is accumulated on-site at any one time; and

(4) The F006 waste is managed in accordance with the following:

(i) The F006 waste is placed:

(A) In containers and the generator complies with the applicable requirements of subparts I, AA, BB, and CC of 40 CFR part 265; and/or

(B) In tanks and the generator complies with the applicable requirements of subparts J, AA, BB, and CC of 40 CFR part 265, except §§265.197(c) and 265.200; and/or

(C) In containment buildings and the generator complies with subpart DD of 40 CFR part 265, and has placed its professional engineer certification that the building complies with the design standards specified in 40 CFR 265.1101 in the facility's operating record prior to operation of the unit. The owner or operator must maintain the following records at the facility:

(*1*) A written description of procedures to ensure that the F006 waste remains in the unit for no more than 180 days, a written description of the waste generation and management practices for

the facility showing that they are consistent with the 180-day limit, and documentation that the generator is complying with the procedures; or

(*2*) Documentation that the unit is emptied at least once every 180 days.

(ii) In addition, such a generator is exempt from all the requirements in subparts G and H of 40 CFR part 265, except for §§265.111 and 265.114.

(iii) The date upon which each period of accumulation begins is clearly marked and visible for inspection on each container;

(iv) While being accumulated on-site, each container and tank is labeled or marked clearly with the words, “Hazardous Waste;” and

(v) The generator complies with the requirements for owners or operators in subparts C and D in 40 CFR part 265, with 40 CFR 265.16, and with 40 CFR 268.7(a)(5).

(h) A generator who generates 1,000 kilograms or greater of hazardous waste per calendar month who also generates wastewater treatment sludges from electroplating operations that meet the listing description for the RCRA hazardous waste code F006, and who must transport this waste, or offer this waste for transportation, over a distance of 200 miles or more for off-site metals recovery, may accumulate F006 waste on-site for more than 90 days, but not more than 270 days without a permit or without having interim status if the generator complies with the requirements of paragraphs (g)(1) through (g)(4) of this section.

(i) A generator accumulating F006 in accordance with paragraphs (g) and (h) of this section who accumulates F006 waste on-site for more than 180 days (or for more than 270 days if the generator must transport this waste, or offer this waste for transportation, over a distance of 200 miles or more), or who accumulates more than 20,000 kilograms of F006 waste on-site is an operator of a storage facility and is subject to the requirements of 40 CFR parts 264 and 265 and the permit requirements of 40 CFR part 270 unless the generator has been granted an extension to the 180-day (or 270-day if applicable) period or an exception to the 20,000 kilogram accumulation limit. Such extensions and exceptions may be granted by EPA if F006 waste must remain on-site for longer than 180 days (or 270 days if applicable) or if more than 20,000 kilograms of F006 waste must remain on-site due to unforeseen, temporary, and uncontrollable circumstances. An extension of up to 30 days or an exception to the accumulation limit may be granted at the discretion of the Regional Administrator on a case-by-case basis.

(j) A member of the Performance Track Program who generates 1000 kg or greater of hazardous waste per month (or one kilogram or more of acute hazardous waste) may accumulate hazardous waste on-site without a permit or interim status for an extended period of time, provided that:

(1) The generator accumulates the hazardous waste for no more than 180 days, or for no more than 270 days if the generator must transport the waste (or offer the waste for transport) more than 200 miles from the generating facility; and

(2) The generator first notifies the Regional Administrator and the Director of the authorized State in writing of its intent to begin accumulation of hazardous waste for extended time periods under the provisions of this section. Such advance notice must include:

(i) Name and EPA ID number of the facility, and specification of when the facility will begin accumulation of hazardous wastes for extended periods of time in accordance with this section; and

(ii) A description of the types of hazardous wastes that will be accumulated for extended periods of time, and the units that will be used for such extended accumulation; and

(iii) A Statement that the facility has made all changes to its operations, procedures, including emergency preparedness procedures, and equipment, including equipment needed for emergency preparedness, that will be necessary to accommodate extended time periods for accumulating hazardous wastes; and

(iv) If the generator intends to accumulate hazardous wastes on-site for up to 270 days, a certification that a facility that is permitted (or operating under interim status) under part 270 of this chapter to receive these wastes is not available within 200 miles of the generating facility; and

(3) The waste is managed in:

(i) Containers, in accordance with the applicable requirements of subparts I, AA, BB, and CC of 40 CFR part 265 and 40 CFR 264.175; or

(ii) Tanks, in accordance with the applicable requirements of subparts J, AA, BB, and CC of 40 CFR part 265, except for §§265.197(c) and 265.200; or

(iii) Drip pads, in accordance with subpart W of 40 CFR part 265; or

(iv) Containment buildings, in accordance with subpart DD of 40 CFR part 265; and

(4) The quantity of hazardous waste that is accumulated for extended time periods at the facility does not exceed 30,000 kg; and

(5) The generator maintains the following records at the facility for each unit used for extended accumulation times:

(i) A written description of procedures to ensure that each waste volume remains in the unit for no more than 180 days (or 270 days, as applicable), a description of the waste generation and management practices at the facility showing that they are consistent with the extended accumulation time limit, and documentation that the procedures are complied with; or

(ii) Documentation that the unit is emptied at least once every 180 days (or 270 days, if applicable); and

(6) Each container or tank that is used for extended accumulation time periods is labeled or marked clearly with the words “Hazardous Waste,” and for each container the date upon which each period of accumulation begins is clearly marked and visible for inspection; and

(7) The generator complies with the requirements for owners and operators in 40 CFR part 265, with §265.16, and with §268.7(a)(5). In addition, such a generator is exempt from all the requirements in subparts G and H of part 265, except for §§265.111 and 265.114; and

(8) The generator has implemented pollution prevention practices that reduce the amount of any hazardous substances, pollutants, or contaminants released to the environment prior to its recycling, treatment, or disposal; and

(9) The generator includes the following with its Performance Track Annual Performance Report, which must be submitted to the Regional Administrator and the Director of the authorized State:

(i) Information on the total quantity of each hazardous waste generated at the facility that has been managed in the previous year according to extended accumulation time periods; and

(ii) Information for the previous year on the number of off-site shipments of hazardous wastes generated at the facility, the types and locations of destination facilities, how the wastes were managed at the destination facilities (e.g., recycling, treatment, storage, or disposal), and what changes in on-site or off-site waste management practices have occurred as a result of extended accumulation times or other pollution prevention provisions of this section; and

(iii) Information for the previous year on any hazardous waste spills or accidents occurring at extended accumulation units at the facility, or during off-site transport of accumulated wastes; and

(iv) If the generator intends to accumulate hazardous wastes on-site for up to 270 days, a certification that a facility that is permitted (or operating under interim status) under part 270 of this chapter to receive these wastes is not available within 200 miles of the generating facility; and

(k) If hazardous wastes must remain on-site at a Performance Track member facility for longer than 180 days (or 270 days, if applicable) due to unforseen, temporary, and uncontrollable circumstances, an extension to the extended accumulation time period of up to 30 days may be granted at the discretion of the Regional Administrator on a case-by-case basis.

(1) If a generator who is a member of the Performance Track Program withdraws from the Performance Track Program, or if the Regional Administrator terminates a generator's membership, the generator must return to compliance with all otherwise applicable hazardous waste regulations as soon as possible, but no later than six months after the date of withdrawal or termination.

(m) A generator who sends a shipment of hazardous waste to a designated facility with the understanding that the designated facility can accept and manage the waste and later receives that shipment back as a rejected load or residue in accordance with the manifest discrepancy provisions of §264.72 or §265.72 of this chapter may accumulate the returned waste on-site in accordance with paragraphs (a) and (b) or (d), (e) and (f) of this section, depending on the amount of hazardous waste on-site in that calendar month. Upon receipt of the returned shipment, the generator must:

(1) Sign Item 18c of the manifest, if the transporter returned the shipment using the original manifest; or

(2) Sign Item 20 of the manifest, if the transporter returned the shipment using a new manifest.

[47 FR 1251, Jan. 11, 1982, as amended at 48 FR 14294, Apr. 1, 1983; 49 FR 49571, Dec. 20, 1984; 51 FR 10175, Mar. 24, 1986; 51 FR 25472, July 14, 1986; 55 FR 22684, June 1, 1990; 55 FR 50483, Dec. 6, 1990; 56 FR 3877, Jan. 31, 1991; 56 FR 30195, July 1, 1991; 57 FR 37264, Aug. 18, 1992; 59 FR 62926, Dec. 6, 1994; 61 FR 4911, Feb. 9, 1996; 61 FR 59950, Nov. 25, 1996; 64 FR 3388, Jan. 21, 1999; 64 FR 25414, May 11, 1999; 64 FR 56471, Oct. 20, 1999; 65 FR 12397, Mar. 8, 2000; 69 FR 21753, Apr. 22, 2004; 69 FR 62224, Oct. 25, 2004; 70 FR 10817, Mar. 4, 2005; 71 FR 40271, July 14, 2006]

Subpart D—Recordkeeping and Reporting

top

§ 262.40 Recordkeeping.

top

(a) A generator must keep a copy of each manifest signed in accordance with §262.23(a) for three years or until he receives a signed copy from the designated facility which received the waste. This signed copy must be retained as a record for at least three years from the date the waste was accepted by the initial transporter.

(b) A generator must keep a copy of each Biennial Report and Exception Report for a period of at least three years from the due date of the report.

(c) A generator must keep records of any test results, waste analyses, or other determinations made in accordance with §262.11 for at least three years from the date that the waste was last sent to on-site or off-site treatment, storage, or disposal.

(d) The periods or retention referred to in this section are extended automatically during the course of any unresolved enforcement action regarding the regulated activity or as requested by the Administrator.

[45 FR 33142, May 19, 1980, as amended at 48 FR 3981, Jan. 28, 1983]

§ 262.41 Biennial report.

top

(a) A generator who ships any hazardous waste off-site to a treatment, storage or disposal facility within the United States must prepare and submit a single copy of a Biennial Report to the Regional Administrator by March 1 of each even numbered year. The Biennial Report must be submitted on EPA Form 8700–13A, must cover generator activities during the previous year, and must include the following information:

(1) The EPA identification number, name, and address of the generator;

(2) The calendar year covered by the report;

(3) The EPA identification number, name, and address for each off-site treatment, storage, or disposal facility in the United States to which waste was shipped during the year;

(4) The name and EPA identification number of each transporter used during the reporting year for shipments to a treatment, storage or disposal facility within the United States;

(5) A description, EPA hazardous waste number (from 40 CFR part 261, subpart C or D), DOT hazard class, and quantity of each hazardous waste shipped off-site for shipments to a treatment, storage or disposal facility within the United States. This information must be listed by EPA identification number of each such off-site facility to which waste was shipped.

(6) A description of the efforts undertaken during the year to reduce the volume and toxicity of waste generated.

(7) A description of the changes in volume and toxicity of waste actually achieved during the year in comparison to previous years to the extent such information is available for years prior to 1984.

(8) The certification signed by the generator or authorized representative.

(b) Any generator who treats, stores, or disposes of hazardous waste on-site must submit a biennial report covering those wastes in accordance with the provisions of 40 CFR parts 270, 264, 265, and 266. Reporting for exports of hazardous waste is not required on the Biennial Report form. A separate annual report requirement is set forth at 40 CFR 262.56.

[48 FR 3981, Jan. 28, 1983, as amended at 48 FR 14294, Apr. 1, 1983; 50 FR 28746, July 15, 1985; 51 FR 28682, Aug. 8, 1986]

§ 262.42 Exception reporting.

top

(a)(1) A generator of greater than 1000 kilograms of hazardous waste in a calendar month who does not receive a copy of the manifest with the handwritten signature of the owner or operator of the designated facility within 35 days of the date the waste was accepted by the initial transporter must contact the transporter and/or the owner or operator of the designated facility to determine the status of the hazardous waste.

(2) A generator of greater than 1000 kilograms of hazardous waste in a calendar month must submit an Exception Report to the EPA Regional Administrator for the Region in which the generator is located if he has not received a copy of the manifest with the handwritten signature of the owner or operator of the designated facility within 45 days of the date the waste was accepted by the initial transporter. The Exception Report must include:

(i) A legible copy of the manifest for which the generator does not have confirmation of delivery;

(ii) A cover letter signed by the generator or his authorized representative explaining the efforts taken to locate the hazardous waste and the results of those efforts.

(b) A generator of greater than 100 kilograms but less than 1000 kilograms of hazardous waste in a calendar month who does not receive a copy of the manifest with the handwritten signature of the owner or operator of the designated facility within 60 days of the date the waste was accepted by the initial transporter must submit a legible copy of the manifest, with some indication that the generator has not received confirmation of delivery, to the EPA Regional Administrator for the Region in which the generator is located.

Note: The submission to EPA need only be a handwritten or typed note on the manifest itself, or on an attached sheet of paper, stating that the return copy was not received.

[52 FR 35898, Sept. 23, 1987]

§ 262.43 Additional reporting.

top

The Administrator, as he deems necessary under sections 2002(a) and 3002(6) of the Act, may require generators to furnish additional reports concerning the quantities and disposition of wastes identified or listed in 40 CFR part 261.

§ 262.44 Special requirements for generators of between 100 and 1000 kg/mo.

top

A generator of greater than 100 kilograms but less than 1000 kilograms of hazardous waste in a calendar month is subject only to the following requirements in this subpart:

(a) Section 262.40(a), (c), and (d), recordkeeping;

(b) Section 262.42(b), exception reporting; and

(c) Section 262.43, additional reporting.

[52 FR 35899, Sept. 23, 1987]

Subpart E—Exports of Hazardous Waste

top

Source: 51 FR 28682, Aug. 8, 1986, unless otherwise noted.

§ 262.50 Applicability.

top

This subpart establishes requirements applicable to exports of hazardous waste. Except to the extent §262.58 provides otherwise, a primary exporter of hazardous waste must comply with the special requirements of this subpart and a transporter transporting hazardous waste for export must comply with applicable requirements of part 263. Section 262.58 sets forth the requirements of international agreements between the United States and receiving countries which establish different notice, export, and enforcement procedures for the transportation, treatment, storage and disposal of hazardous waste for shipments between the United States and those countries.

§ 262.51 Definitions.

top

In addition to the definitions set forth at 40 CFR 260.10, the following definitions apply to this subpart:

Consignee means the ultimate treatment, storage or disposal facility in a receiving country to which the hazardous waste will be sent.

EPA Acknowledgement of Consent means the cable sent to EPA from the U.S. Embassy in a receiving country that acknowledges the written consent of the receiving country to accept the hazardous waste and describes the terms and conditions of the receiving country's consent to the shipment.

Primary Exporter means any person who is required to originate the manifest for a shipment of hazardous waste in accordance with 40 CFR part 262, subpart B, or equivalent State provision, which specifies a treatment, storage, or disposal facility in a receiving country as the facility to which the hazardous waste will be sent and any intermediary arranging for the export.

Receiving country means a foreign country to which a hazardous waste is sent for the purpose of treatment, storage or disposal (except short-term storage incidental to transportation).

Transit country means any foreign country, other than a receiving country, through which a hazardous waste is transported.

[53 FR 27164, July 19, 1988]

§ 262.52 General requirements.

top

Exports of hazardous waste are prohibited except in compliance with the applicable requirements of this subpart and part 263. Exports of hazardous waste are prohibited unless:

(a) Notification in accordance with §262.53 has been provided;

(b) The receiving country has consented to accept the hazardous waste;

(c) A copy of the EPA Acknowledgment of Consent to the shipment accompanies the hazardous waste shipment and, unless exported by rail, is attached to the manifest (or shipping paper for exports by water (bulk shipment)).

(d) The hazardous waste shipment conforms to the terms of the receiving country's written consent as reflected in the EPA Acknowledgment of Consent.

§ 262.53 Notification of intent to export.

top

(a) A primary exporter of hazardous waste must notify EPA of an intended export before such waste is scheduled to leave the United States. A complete notification should be submitted sixty (60) days before the initial shipment is intended to be shipped off site. This notification may cover export activities extending over a twelve (12) month or lesser period. The notification must be in writing, signed by the primary exporter, and include the following information:

(1) Name, mailing address, telephone number and EPA ID number of the primary exporter;

(2) By consignee, for each hazardous waste type:

(i) A description of the hazardous waste and the EPA hazardous waste number (from 40 CFR part 261, subparts C and D), U.S. DOT proper shipping name, hazard class and ID number (UN/NA) for each hazardous waste as identified in 49 CFR parts 171 through 177;

(ii) The estimated frequency or rate at which such waste is to be exported and the period of time over which such waste is to be exported.

(iii) The estimated total quantity of the hazardous waste in units as specified in the instructions to the Uniform Hazardous Waste Manifest Form (8700–22);

(iv) All points of entry to and departure from each foreign country through which the hazardous waste will pass;

(v) A description of the means by which each shipment of the hazardous waste will be transported (e.g., mode of transportation vehicle (air, highway, rail, water, etc.), type(s) of container (drums, boxes, tanks, etc.));

(vi) A description of the manner in which the hazardous waste will be treated, stored or disposed of in the receiving country (e.g., land or ocean incineration, other land disposal, ocean dumping, recycling);

(vii) The name and site address of the consignee and any alternate consignee; and

(viii) The name of any transit countries through which the hazardous waste will be sent and a description of the approximate length of time the hazardous waste will remain in such country and the nature of its handling while there;

(b) Notifications submitted by mail should be sent to the following mailing address: Office of Enforcement and Compliance Assurance, Office of Federal Activities, International Compliance Assurance Division (2254A), Environmental Protection Agency, 1200 Pennsylvania Ave., NW., Washington, DC 20460. Hand-delivered notifications should be sent to: Office of Enforcement and Compliance Assurance, Office of Federal Activities, International Compliance Assurance Division, Environmental Protection Agency, Ariel Rios Bldg., Room 6144, 12th St. and Pennsylvania Ave., NW., Washington, DC 20004. In both cases, the following shall be prominently displayed on the front of the envelope: “Attention: Notification of Intent to Export.”.

(c) Except for changes to the telephone number in paragraph (a)(1) of this section, changes to paragraph (a)(2)(v) of this section and decreases in the quantity indicated pursuant to paragraph (a)(2)(iii) of this section when the conditions specified on the original notification change (including any exceedance of the estimate of the quantity of hazardous waste specified in the original notification), the primary exporter must provide EPA with a written renotification of the change. The shipment cannot take place until consent of the receiving country to the changes (except for changes to paragraph (a)(2)(viii) of this section and in the ports of entry to and departure from transit countries pursuant to paragraph (a)(2)(iv) of this section) has been obtained and the primary exporter receives an EPA Acknowledgment of Consent reflecting the receiving country's consent to the changes.

(d) Upon request by EPA, a primary exporter shall furnish to EPA any additional information which a receiving country requests in order to respond to a notification.

(e) In conjunction with the Department of State, EPA will provide a complete notification to the receiving country and any transit countries. A notification is complete when EPA receives a notification which EPA determines satisfies the requirements of paragraph (a) of this section. Where a claim of confidentiality is asserted with respect to any notification information required

by paragraph (a) of this section, EPA may find the notification not complete until any such claim is resolved in accordance with 40 CFR 260.2.

(f) Where the receiving country consents to the receipt of the hazardous waste, EPA will forward an EPA Acknowledgment of Consent to the primary exporter for purposes of §262.54(h). Where the receiving country objects to receipt of the hazardous waste or withdraws a prior consent, EPA will notify the primary exporter in writing. EPA will also notify the primary exporter of any responses from transit countries.

[51 FR 28682, Aug. 8, 1986, as amended at 56 FR 43705, Sept. 4, 1991; 61 FR 16309, Apr. 12, 1996; 71 FR 40271, July 14, 2006]

§ 262.54 Special manifest requirements.

top

A primary exporter must comply with the manifest requirements of 40 CFR 262.20 through 262.23 except that:

(a) In lieu of the name, site address and EPA ID number of the designated permitted facility, the primary exporter must enter the name and site address of the consignee;

(b) In lieu of the name, site address and EPA ID number of a permitted alternate facility, the primary exporter may enter the name and site address of any alternate consignee.

(c) In the International Shipments block, the primary exporter must check the export box and enter the point of exit (city and State) from the United States.

(d) The following statement must be added to the end of the first sentence of the certification set forth in Item 16 of the Uniform Hazardous Waste Manifest Form: “and conforms to the terms of the attached EPA Acknowledgment of Consent”;

(e) The primary exporter may obtain the manifest from any source that is registered with the U.S. EPA as a supplier of manifests (*e.g.* , states, waste handlers, and/or commercial forms printers).

(f) The primary exporter must require the consignee to confirm in writing the delivery of the hazardous waste to that facility and to describe any significant discrepancies (as defined in 40 CFR 264.72(a)) between the manifest and the shipment. A copy of the manifest signed by such facility may be used to confirm delivery of the hazardous waste.

(g) In lieu of the requirements of §262.20(d), where a shipment cannot be delivered for any reason to the designated or alternate consignee, the primary exporter must:

(1) Renotify EPA of a change in the conditions of the original notification to allow shipment to a new consignee in accordance with §262.53(c) and obtain an EPA Acknowledgment of Consent prior to delivery; or

(2) Instruct the transporter to return the waste to the primary exporter in the United States or designate another facility within the United States; and

(3) Instruct the transporter to revise the manifest in accordance with the primary exporter's instructions.

(h) The primary exporter must attach a copy of the EPA Acknowledgment of Consent to the shipment to the manifest which must accompany the hazardous waste shipment. For exports by rail or water (bulk shipment), the primary exporter must provide the transporter with an EPA Acknowledgment of Consent which must accompany the hazardous waste but which need not be attached to the manifest except that for exports by water (bulk shipment) the primary exporter must attach the copy of the EPA Acknowledgment of Consent to the shipping paper.

(i) The primary exporter shall provide the transporter with an additional copy of the manifest for delivery to the U.S. Customs official at the point the hazardous waste leaves the United States in accordance with §263.20(g)(4).

[51 FR 28682, Aug. 8, 1986, as amended at 70 FR 10818, Mar. 4, 2005]

§ 262.55 Exception reports.

top

In lieu of the requirements of §262.42, a primary exporter must file an exception report with the Administrator if:

(a) He has not received a copy of the manifest signed by the transporter stating the date and place of departure from the United States within forty-five (45) days from the date it was accepted by the initial transporter;

(b) Within ninety (90) days from the date the waste was accepted by the initial transporter, the primary exporter has not received written confirmation from the consignee that the hazardous waste was received;

(c) The waste is returned to the United States.

§ 262.56 Annual reports.

top

(a) Primary exporters of hazardous waste shall file with the Administrator no later than March 1 of each year, a report summarizing the types, quantities, frequency, and ultimate destination of all hazardous waste exported during the previous calendar year. Such reports shall include the following:

(1) The EPA identification number, name, and mailing and site address of the exporter;

(2) The calendar year covered by the report;

(3) The name and site address of each consignee;

(4) By consignee, for each hazardous waste exported, a description of the hazardous waste, the EPA hazardous waste number (from 40 CFR part 261, subpart C or D), DOT hazard class, the name and US EPA ID number (where applicable) for each transporter used, the total amount of waste shipped and number of shipments pursuant to each notification;

(5) Except for hazardous waste produced by exporters of greater than 100 kg but less than 1000 kg in a calendar month, unless provided pursuant to §262.41, in even numbered years:

(i) A description of the efforts undertaken during the year to reduce the volume and toxicity of waste generated; and

(ii) A description of the changes in volume and toxicity of waste actually achieved during the year in comparison to previous years to the extent such information is available for years prior to 1984.

(6) A certification signed by the primary exporter which states:

I certify under penalty of law that I have personally examined and am familiar with the information submitted in this and all attached documents, and that based on my inquiry of those individuals immediately responsible for obtaining the information, I believe that the submitted information is true, accurate, and complete. I am aware that there are significant penalties for submitting false information including the possibility of fine and imprisonment.

(b) Annual reports submitted by mail should be sent to the following mailing address: Office of Enforcement and Compliance Assurance, Office of Federal Activities, International Compliance Assurance Division (2254A), Environmental Protection Agency, 1200 Pennsylvania Ave., NW., Washington, DC 20460. Hand-delivered reports should be sent to: Office of Enforcement and Compliance Assurance, Office of Federal Activities, International Compliance Assurance Division, Environmental Protection Agency, Ariel Rios Bldg., Room 6144, 12th St. and Pennsylvania Ave., NW., Washington, DC 20004.

[51 FR 28682, Aug. 8, 1986, as amended at 56 FR 43705, Sept. 4, 1991; 61 FR 16309, Apr. 12, 1996; 71 FR 40271, July 14, 2006]

§ 262.57 Recordkeeping.

top

(a) For all exports a primary exporter must:

(1) Keep a copy of each notification of intent to export for a period of at least three years from the date the hazardous waste was accepted by the initial transporter;

(2) Keep a copy of each EPA Acknowledgment of Consent for a period of at least three years from the date the hazardous waste was accepted by the initial transporter;

(3) Keep a copy of each confirmation of delivery of the hazardous waste from the consignee for at least three years from the date the hazardous waste was accepted by the initial transporter; and

(4) Keep a copy of each annual report for a period of at least three years from the due date of the report.

(b) The periods of retention referred to in this section are extended automatically during the course of any unresolved enforcement action regarding the regulated activity or as requested by the Administrator.

§ 262.58 International agreements.

top

(a) Any person who exports or imports hazardous waste subject to Federal manifest requirements of Part 262, or subject to the universal waste management standards of 40 CFR Part 273, or subject to State requirements analogous to 40 CFR Part 273, to or from designated member countries of the Organization for Economic Cooperation and Development (OECD) as defined in paragraph (a)(1) of this section for purposes of recovery is subject to Subpart H of this part. The requirements of Subparts E and F do not apply.

(1) For the purposes of subpart H, the designated OECD Member countries consist of Australia, Austria, Belgium, the Czech Republic, Denmark, Finland, France, Germany, Greece, Hungary, Iceland, Ireland, Italy, Japan, Luxembourg, the Netherlands, New Zealand, Norway, Poland, Portugal, the Slovak Republic, South Korea, Spain, Sweden, Switzerland, Turkey, the United Kingdom, and the United States.

(2) For the purposes of this Subpart, Canada and Mexico are considered OECD member countries only for the purpose of transit.

(b) Any person who exports hazardous waste to or imports hazardous waste from: a designated OECD member country for purposes other than recovery (*e.g.*, incineration, disposal), Mexico (for any purpose), or Canada (for any purpose) remains subject to the requirements of subparts E and F of this part.

[61 FR 16310, Apr. 12, 1996, as amended at 71 FR 40271, July 14, 2006]

Subpart F—Imports of Hazardous Waste

top

§ 262.60 Imports of hazardous waste.

top

(a) Any person who imports hazardous waste from a foreign country into the United States must comply with the requirements of this part and the special requirements of this subpart.

(b) When importing hazardous waste, a person must meet all the requirements of §262.20(a) for the manifest except that:

(1) In place of the generator's name, address and EPA identification number, the name and address of the foreign generator and the importer's name, address and EPA identification number must be used.

(2) In place of the generator's signature on the certification statement, the U.S. importer or his agent must sign and date the certification and obtain the signature of the initial transporter.

(c) A person who imports hazardous waste may obtain the manifest form from any source that is registered with the U.S. EPA as a supplier of manifests (*e.g.* , states, waste handlers, and/or commercial forms printers).

(d) In the International Shipments block, the importer must check the import box and enter the point of entry (city and State) into the United States.

(e) The importer must provide the transporter with an additional copy of the manifest to be submitted by the receiving facility to U.S. EPA in accordance with §264.71(a)(3) and §265.71(a)(3) of this chapter.

[51 FR 28685, Aug. 8, 1986, as amended at 70 FR 10818, Mar. 4, 2005]

Subpart H—Transfrontier Shipments of Hazardous Waste for Recovery within the OECD

top

Source: 61 FR 16310, Apr. 12, 1996, unless otherwise noted.

§ 262.80 Applicability.

top

(a) The requirements of this subpart apply to imports and exports of wastes that are considered hazardous under U.S. national procedures and are destined for recovery operations in the countries listed in §262.58(a)(1). A waste is considered hazardous under U.S. national procedures if it meets the Federal definition of hazardous waste in 40 CFR 261.3 and it is subject to either the Federal manifesting requirements at 40 CFR Part 262, Subpart B, to the universal waste management standards of 40 CFR Part 273, or to State requirements analogous to 40 CFR Part 273.

(b) Any person (notifier, consignee, or recovery facility operator) who mixes two or more wastes (including hazardous and non-hazardous wastes) or otherwise subjects two or more wastes (including hazardous and non-hazardous wastes) to physical or chemical transformation operations, and thereby creates a new hazardous waste, becomes a generator and assumes all subsequent generator duties under RCRA and any notifier duties, if applicable, under this subpart.

§ 262.81 Definitions.

top

The following definitions apply to this subpart.

(a) *Competent authorities* means the regulatory authorities of concerned countries having jurisdiction over transfrontier movements of wastes destined for recovery operations.

(b) *Concerned countries* means the exporting and importing OECD member countries and any OECD member countries of transit.

(c) *Consignee* means the person to whom possession or other form of legal control of the waste is assigned at the time the waste is received in the importing country.

(d) *Country of transit* means any designated OECD country in §262.58(a)(1) and (a)(2) other than the exporting or importing country across which a transfrontier movement of wastes is planned or takes place.

(e) *Exporting country* means any designated OECD member country in §262.58(a)(1) from which a transfrontier movement of wastes is planned or has commenced.

(f) *Importing country* means any designated OECD country in §262.58(a)(1) to which a transfrontier movement of wastes is planned or takes place for the purpose of submitting the wastes to recovery operations therein.

(g) *Notifier* means the person under the jurisdiction of the exporting country who has, or will have at the time the planned transfrontier movement commences, possession or other forms of legal control of the wastes and who proposes their transfrontier movement for the ultimate purpose of submitting them to recovery operations. When the United States (U.S.) is the exporting country, notifier is interpreted to mean a person domiciled in the U.S.

(h) *OECD area* means all land or marine areas under the national jurisdiction of any designated OECD member country in §262.58. When the regulations refer to shipments to or from an OECD country, this means OECD area.

(i) *Recognized trader* means a person who, with appropriate authorization of concerned countries, acts in the role of principal to purchase and subsequently sell wastes; this person has

legal control of such wastes from time of purchase to time of sale; such a person may act to arrange and facilitate transfrontier movements of wastes destined for recovery operations.

(j) *Recovery facility* means an entity which, under applicable domestic law, is operating or is authorized to operate in the importing country to receive wastes and to perform recovery operations on them.

(k) *Recovery operations* means activities leading to resource recovery, recycling, reclamation, direct re-use or alternative uses as listed in Table 2.B of the Annex of OECD Council Decision C(88)90(Final) of 27 May 1988, (available from the Environmental Protection Agency, RCRA Docket, EPA/DC, EPA West, Room B102, 1301 Constitution Ave., NW., Washington, DC 20460 (Docket # F–94–IEHF-FFFFF) and the Organisation for Economic Co-operation and Development, Environment Direcorate, 2 rue Andre Pascal, 75775 Paris Cedex 16, France) which include:

R1 Use as a fuel (other than in direct incineration) or other means to generate energy

R2 Solvent reclamation/regeneration

R3 Recycling/reclamation of organic substances which are not used as solvents

R4 Recycling/reclamation of metals and metal compounds

R5 Recycling/reclamation of other inorganic materials

R6 Regeneration of acids or bases

R7 Recovery of components used for pollution control

R8 Recovery of components from catalysts

R9 Used oil re-refining or other reuses of previously used oil

R10 Land treatment resulting in benefit to agriculture or ecological improvement

R11 Uses of residual materials obtained from any of the operations numbered R1–R10

R12 Exchange of wastes for submission to any of the operations numbered R1–R11

6R13 Accumulation of material intended for any operation in Table 2.B

(l) *Transfrontier movement* means any shipment of wastes destined for recovery operations from an area under the national jurisdiction of one OECD member country to an area under the national jurisdiction of another OECD member country.

[61 FR 16310, Apr. 12, 1996, as amended at 71 FR 40271, July 14, 2006]

§ 262.82 General conditions.

top

(a) *Scope*. The level of control for exports and imports of waste is indicated by assignment of the waste to a green, amber, or red list and by U.S. national procedures as defined in §262.80(a). The green, amber, and red lists are incorporated by reference in §262.89 (e).

(1) Wastes on the green list are subject to existing controls normally applied to commercial transactions, except as provided below:

(i) Green-list wastes that are considered hazardous under U.S. national procedures are subject to amber-list controls.

(ii) Green-list wastes that are sufficiently contaminated or mixed with amber-list wastes, such that the waste or waste mixture is considered hazardous under U.S. national procedures, are subject to amber-list controls.

(iii) Green-list wastes that are sufficiently contaminated or mixed with other wastes subject to red-list controls such that the waste or waste mixture is considered hazardous under U.S. national procedures must be handled in accordance with the red-list controls.

(2) Wastes on the amber list that are considered hazardous under U.S. national procedures as defined in §262.80(a) are subject to the amber-list controls of this Subpart.

(i) If amber-list wastes are sufficiently contaminated or mixed with other wastes subject to red-list controls such that the waste or waste mixture is considered hazardous under U.S. national procedures, the wastes must be handled in accordance with the red-list controls.

(ii) [Reserved]

(3) Wastes on the red list that are considered hazardous under U.S. national procedures as defined in §262.80(a) are subject to the red-list controls of this subpart.

Note to paragraph(a)(3): Some wastes on the amber or red lists are not listed or otherwise identified as hazardous under RCRA (*e.g.*, polychlorinated biphenyls) and therefore are not subject to the amber- or red-list controls of this subpart. Regardless of the status of the waste under RCRA, however, other Federal environmental statutes (e.g., the Toxic Substances Control Act) may restrict certain waste imports or exports. Such restrictions continue to apply without regard to this Subpart.

(4) Wastes not yet assigned to a list are eligible for transfrontier movements, as follows:

(i) If such wastes are considered hazardous under U.S. national procedures as defined in §262.80(a), these wastes are subject to the red-list controls; or

(ii) If such wastes are not considered hazardous under U.S. national procedures as defined in §262.80(a), such wastes may move as though they appeared on the green list.

(b) *General conditions applicable to transfrontier movements of hazardous waste.* (1) The waste must be destined for recovery operations at a facility that, under applicable domestic law, is operating or is authorized to operate in the importing country;

(2) The transfrontier movement must be in compliance with applicable international transport agreements; and

Note to paragraph(b)(2): These international agreements include, but are not limited to, the Chicago Convention (1944), ADR (1957), ADNR (1970), MARPOL Convention (1973/1978), SOLAS Convention (1974), IMDG Code (1985), COTIF (1985), and RID (1985).

(3) Any transit of waste through a non-OECD member country must be conducted in compliance with all applicable international and national laws and regulations.

(c) *Provisions relating to re-export for recovery to a third country.* (1) Re-export of wastes subject to the amber-list control system from the U.S., as the importing country, to a third country listed in §262.58(a)(1) may occur only after a notifier in the U.S. provides notification to and obtains consent of the competent authorities in the third country, the original exporting country, and new transit countries. The notification must comply with the notice and consent procedures in §262.83 for all concerned countries and the original exporting country. The competent authorities of the original exporting country as well as the competent authorities of all other concerned countries have 30 days to object to the proposed movement.

(i) The 30-day period begins once the competent authorities of both the initial exporting country and new importing country issue Acknowledgements of Receipt of the notification.

(ii) The transfrontier movement may commence if no objection has been lodged after the 30-day period has passed or immediately after written consent is received from all relevant OECD importing and transit countries.

(2) Re-export of waste subject to the red-list control system from the original importing country to a third country listed in §262.58(a)(1) may occur only following notification of the competent authorities of the third country, the original exporting country, and new transit countries by a notifier in the original importing country in accordance with §262.83. The transfrontier movement may not proceed until receipt by the original importing country of written consent from the competent authorities of the third country, the original exporting country, and new transit countries.

(3) In the case of re-export of amber or red-list wastes to a country other than those in §262.58(a)(1), notification to and consent of the competent authorities of the original OECD member country of export and any OECD member countries of transit is required as specified in paragraphs (c)(1) and (c)(2) of this section in addition to compliance with all international agreements and arrangements to which the first importing OECD member country is a party and all applicable regulatory requirements for exports from the first importing country.

[61 FR 16310, Apr. 12, 1996, as amended at 71 FR 40271, July 14, 2006]

§ 262.83 Notification and consent.

top

(a) *Applicability.* Consent must be obtained from the competent authorities of the relevant OECD importing and transit countries prior to exporting hazardous waste destined for recovery operations subject to this Subpart. Hazardous wastes subject to amber-list controls are subject to the requirements of paragraph (b) of this section; hazardous wastes subject to red-list controls are subject to the requirements of paragraph (c) of this section; and wastes not identified on any list are subject to the requirements of paragraph (d) of this section.

(b) *Amber-list wastes.* The export from the U.S. of hazardous wastes as described in §262.80(a) that appear on the amber list is prohibited unless the notification and consent requirements of paragraph (b)(1) or paragraph (b)(2) of this section are met.

(1) Transactions requiring specific consent:

(i) *Notification.* At least 45 days prior to commencement of the transfrontier movement, the notifier must provide written notification in English of the proposed transfrontier movement to the Office of Enforcement and Compliance Assurance, Office of Federal Activities, International Compliance Assurance Division (2254A), Environmental Protection Agency, 1200 Pennsylvania Ave., NW., Washington, DC 20460, with the words “Attention: OECD Export Notification” prominently displayed on the envelope. This notification must include all of the information identified in paragraph (e) of this section. In cases where wastes having similar physical and chemical characteristics, the same United Nations classification, and the same RCRA waste codes are to be sent periodically to the same recovery facility by the same notifier, the notifier may submit one notification of intent to export these wastes in multiple shipments during a period of up to one year.

(ii) *Tacit consent.* If no objection has been lodged by any concerned country (*i.e.*, exporting, importing, or transit countries) to a notification provided pursuant to paragraph (b)(1)(i) of this section within 30 days after the date of issuance of the Acknowledgment of Receipt of notification by the competent authority of the importing country, the transfrontier movement may commence. Tacit consent expires one calendar year after the close of the 30 day period; renotification and renewal of all consents is required for exports after that date.

(iii) *Written consent.* If the competent authorities of all the relevant OECD importing and transit countries provide written consent in a period less than 30 days, the transfrontier movement may commence immediately after all necessary consents are received. Written consent expires for each relevant OECD importing and transit country one calendar year after the date of that country's consent unless otherwise specified; renotification and renewal of each expired consent is required for exports after that date.

(2) Shipments to facilities pre-approved by the competent authorities of the importing countries to accept specific wastes for recovery:

(i) The notifier must provide EPA the information identified in paragraph (e) of this section in English, at least 10 days in advance of commencing shipment to a pre-approved facility. The notification should indicate that the recovery facility is pre-approved, and may apply to a single specific shipment or to multiple shipments as described in paragraph (b)(1)(i) of this section. This information must be sent to the Office of Enforcement and Compliance Assurance, Office of Federal Activities, International Compliance Assurance Division (2254A), Environmental Protection Agency, 1200 Pennsylvania Ave., NW., Washington, DC 20460, with the words "Attention: OECD Export Notification—Pre-approved Facility" prominently displayed on the envelope.

(ii) Shipments may commence after the notification required in paragraph (b)(1)(i) of this section has been received by the competent authorities of all concerned countries, unless the notifier has received information indicating that the competent authorities of one or more concerned countries objects to the shipment.

(c) *Red-list wastes.* The export from the U.S. of hazardous wastes as described in §262.80(a) that appear on the red list is prohibited unless notice is given pursuant to paragraph (b)(1)(i) of this section and the notifier receives *written* consent from the importing country and any transit countries prior to commencement of the transfrontier movement.

(d) *Unlisted wastes.* Wastes not assigned to the green, amber, or red list that are considered hazardous under U.S. national procedures as defined in §262.80(a) are subject to the notification and consent requirements established for red-list wastes in accordance with paragraph (c) of this section. Unlisted wastes that are not considered hazardous under U.S. national procedures as defined in §262.80(a) are not subject to amber or red controls when exported or imported.

(e) *Notification information.* Notifications submitted under this section must include:

(1) Serial number or other accepted identifier of the notification form;

(2) Notifier name and EPA identification number (if applicable), address, and telephone and telefax numbers;

(3) Importing recovery facility name, address, telephone and telefax numbers, and technologies employed;

(4) Consignee name (if not the owner or operator of the recovery facility) address, and telephone and telefax numbers; whether the consignee will engage in waste exchange or storage prior to delivering the waste to the final recovery facility and identification of recovery operations to be employed at the final recovery facility;

(5) Intended transporters and/or their agents;

(6) Country of export and relevant competent authority, and point of departure;

(7) Countries of transit and relevant competent authorities and points of entry and departure;

(8) Country of import and relevant competent authority, and point of entry;

(9) Statement of whether the notification is a single notification or a general notification. If general, include period of validity requested;

(10) Date foreseen for commencement of transfrontier movement;

(11) Designation of waste type(s) from the appropriate list (amber or red and waste list code), descriptions of each waste type, estimated total quantity of each, RCRA waste code, and United Nations number for each waste type; and

(12) Certification/Declaration signed by the notifier that states:

I certify that the above information is complete and correct to the best of my knowledge. I also certify that legally-enforceable written contractual obligations have been entered into, and that any applicable insurance or other financial guarantees are or shall be in force covering the transfrontier movement.

Name:_____
Signature:_____
Date:_____

Note to paragraph(e)(12): The U.S. does not currently require financial assurance; however, U.S. exporters may be asked by other governments to provide and certify to such assurance as a condition of obtaining consent to a proposed movement.

[61 FR 16310, Apr. 12, 1996, as amended at 71 FR 40271, July 14, 2006]

§ 262.84 Tracking document.

top

(a) All U.S. parties subject to the contract provisions of §262.85 must ensure that a tracking document meeting the conditions of §262.84(b) accompanies each transfrontier shipment of wastes subject to amber-list or red-list controls from the initiation of the shipment until it reaches the final recovery facility, including cases in which the waste is stored and/or exchanged by the consignee prior to shipment to the final recovery facility, except as provided in §§262.84(a)(1) and (2).

(1) For shipments of hazardous waste within the U.S. solely by water (bulk shipments only) the generator must forward the tracking document with the manifest to the last water (bulk shipment) transporter to handle the waste in the U.S. if exported by water, (in accordance with the manifest routing procedures at §262.23(c)).

(2) For rail shipments of hazardous waste within the U.S. which originate at the site of generation, the generator must forward the tracking document with the manifest (in accordance with the routing procedures for the manifest in §262.23(d)) to the next non-rail transporter, if any, or the last rail transporter to handle the waste in the U.S. if exported by rail.

(b) The tracking document must include all information required under §262.83 (for notification), and the following:

(1) Date shipment commenced.

(2) Name (if not notifier), address, and telephone and telefax numbers of primary exporter.

(3) Company name and EPA ID number of all transporters.

(4) Identification (license, registered name or registration number) of means of transport, including types of packaging.

(5) Any special precautions to be taken by transporters.

(6) Certification/declaration signed by notifier that no objection to the shipment has been lodged as follows:

I certify that the above information is complete and correct to the best of my knowledge. I also certify that legally-enforceable written contractual obligations have been entered into, that any applicable insurance or other financial guarantees are or shall be in force covering the transfrontier movement, and that:

1. All necessary consents have been received; OR

2. The shipment is directed at a recovery facility within the OECD area and no objection has been received from any of the concerned countries within the 30 day tacit consent period; OR

3. The shipment is directed at a recovery facility pre-authorized for that type of waste within the OECD area; such an authorization has not been revoked, and no objection has been received from any of the concerned countries.

(delete sentences that are not applicable)

Name:_____
Signature:_____
Date:_____

(7) Appropriate signatures for each custody transfer (e.g. transporter, consignee, and owner or operator of the recovery facility).

(c) Notifiers also must comply with the special manifest requirements of 40 CFR 262.54(a), (b), (c), (e), and (i) and consignees must comply with the import requirements of 40 CFR part 262, subpart F.

(d) Each U.S. person that has physical custody of the waste from the time the movement commences until it arrives at the recovery facility must sign the tracking document (*e.g.* transporter, consignee, and owner or operator of the recovery facility).

(e) Within three working days of the receipt of imports subject to this Subpart, the owner or operator of the U.S. recovery facility must send signed copies of the tracking document to the

notifier, to the Office of Enforcement and Compliance Assurance, Office of Federal Activities, International Compliance Assurance Division (2254A), Environmental Protection Agency, 1200 Pennsylvania Ave., NW., Washington, DC 20460, and to the competent authorities of the exporting and transit countries.

[61 FR 16310, Apr. 12, 1996, as amended at 71 FR 40271, July 14, 2006]

§ 262.85 Contracts.

top

(a) Transfrontier movements of hazardous wastes subject to amber or red control procedures are prohibited unless they occur under the terms of a valid written contract, chain of contracts, or equivalent arrangements (when the movement occurs between parties controlled by the same corporate or legal entity). Such contracts or equivalent arrangements must be executed by the notifier and the owner or operator of the recovery facility, and must specify responsibilities for each. Contracts or equivalent arrangements are valid for the purposes of this section only if persons assuming obligations under the contracts or equivalent arrangements have appropriate legal status to conduct the operations specified in the contract or equivalent arrangement.

(b) Contracts or equivalent arrangements must specify the name and EPA ID number, where available, of:

(1) The generator of each type of waste;

(2) Each person who will have physical custody of the wastes;

(3) Each person who will have legal control of the wastes; and

(4) The recovery facility.

(c) Contracts or equivalent arrangements must specify which party to the contract will assume responsibility for alternate management of the wastes if its disposition cannot be carried out as described in the notification of intent to export. In such cases, contracts must specify that:

(1) The person having actual possession or physical control over the wastes will immediately inform the notifier and the competent authorities of the exporting and importing countries and, if the wastes are located in a country of transit, the competent authorities of that country; and

(2) The person specified in the contract will assume responsibility for the adequate management of the wastes in compliance with applicable laws and regulations including, if necessary, arranging their return to the original country of export.

(d) Contracts must specify that the consignee will provide the notification required in §262.82(c) prior to re-export of controlled wastes to a third country.

(e) Contracts or equivalent arrangements must include provisions for financial guarantees, if required by the competent authorities of any concerned country, in accordance with applicable national or international law requirements.

Note to paragraph(e): Financial guarantees so required are intended to provide for alternate recycling, disposal or other means of sound management of the wastes in cases where arrangements for the shipment and the recovery operations cannot be carried out as foreseen. The U.S. does not require such financial guarantees at this time; however, some OECD countries do. It is the responsibility of the notifier to ascertain and comply with such requirements; in some cases, transporters or consignees may refuse to enter into the necessary contracts absent specific references or certifications to financial guarantees.

(f) Contracts or equivalent arrangements must contain provisions requiring each contracting party to comply with all applicable requirements of this subpart.

(g) Upon request by EPA, U.S. notifiers, consignees, or recovery facilities must submit to EPA copies of contracts, chain of contracts, or equivalent arrangements (when the movement occurs between parties controlled by the same corporate or legal entity). Information contained in the contracts or equivalent arrangements for which a claim of confidentiality is asserted accordance with 40 CFR 2.203(b) will be treated as confidential and will be disclosed by EPA only as provided in 40 CFR 260.2.

Note to paragraph(g): Although the U.S. does not require routine submission of contracts at this time, OECD Council Decision C(92)39/FINAL allows members to impose such requirements. When other OECD countries require submission of partial or complete copies of the contract as a condition to granting consent to proposed movements, EPA will request the required information; absent submission of such information, some OECD countries may deny consent for the proposed movement.

§ 262.86 Provisions relating to recognized traders.

top

(a) A recognized trader who takes physical custody of a waste and conducts recovery operations (including storage prior to recovery) is acting as the owner or operator of a recovery facility and must be so authorized in accordance with all applicable Federal laws.

(b) A recognized trader acting as a notifier or consignee for transfrontier shipments of waste must comply with all the requirements of this Subpart associated with being a notifier or consignee.

§ 262.87 Reporting and recordkeeping.

top

(a) *Annual reports.* For all waste movements subject to this Subpart, persons (e.g., notifiers, recognized traders) who meet the definition of primary exporter in §262.51 shall file an annual report with the Office of Enforcement and Compliance Assurance, Office of Federal Activities, International Compliance Assurance Division (2254A), Environmental Protection Agency, 1200 Pennsylvania Ave., NW., Washington, DC 20460, no later than March 1 of each year

summarizing the types, quantities, frequency, and ultimate destination of all such hazardous waste exported during the previous calendar year. (If the primary exporter is required to file an annual report for waste exports that are not covered under this Subpart, he may include all export information in one report provided the following information on exports of waste destined for recovery within the designated OECD member countries is contained in a separate section). Such reports shall include the following:

(1) The EPA identification number, name, and mailing and site address of the notifier filing the report;

(2) The calendar year covered by the report;

(3) The name and site address of each final recovery facility;

(4) By final recovery facility, for each hazardous waste exported, a description of the hazardous waste, the EPA hazardous waste number (from 40 CFR part 261, subpart C or D), designation of waste type(s) from OECD waste list and applicable waste code from the OECD lists, DOT hazard class, the name and U.S. EPA identification number (where applicable) for each transporter used, the total amount of hazardous waste shipped pursuant to this Subpart, and number of shipments pursuant to each notification;

(5) In even numbered years, for each hazardous waste exported, except for hazardous waste produced by exporters of greater than 100 kg but less than 1000 kg in a calendar month, and except for hazardous waste for which information was already provided pursuant to §262.41:

(i) A description of the efforts undertaken during the year to reduce the volume and toxicity of waste generated; and

(ii) A description of the changes in volume and toxicity of the waste actually achieved during the year in comparison to previous years to the extent such information is available for years prior to 1984; and

(6) A certification signed by the person acting as primary exporter that states:

I certify under penalty of law that I have personally examined and am familiar with the information submitted in this and all attached documents, and that based on my inquiry of those individuals immediately responsible for obtaining the information, I believe that the submitted information is true, accurate, and complete. I am aware that there are significant penalties for submitting false information including the possibility of fine and imprisonment.

(b) *Exception reports.* Any person who meets the definition of primary exporter in §262.51 must file an exception report in lieu of the requirements of §262.42 with the Administrator if any of the following occurs:

(1) He has not received a copy of the tracking documentation signed by the transporter stating point of departure of the waste from the United States, within forty-five (45) days from the date it was accepted by the initial transporter;

(2) Within ninety (90) days from the date the waste was accepted by the initial transporter, the notifier has not received written confirmation from the recovery facility that the hazardous waste was received;

(3) The waste is returned to the United States.

(c) *Recordkeeping.* (1) Persons who meet the definition of primary exporter in §262.51 shall keep the following records: §262.89

(i) A copy of each notification of intent to export and all written consents obtained from the competent authorities of concerned countries for a period of at least three years from the date the hazardous waste was accepted by the initial transporter;

(ii) A copy of each annual report for a period of at least three years from the due date of the report; and

(iii) A copy of any exception reports and a copy of each confirmation of delivery (*i.e.,* tracking documentation) sent by the recovery facility to the notifier for at least three years from the date the hazardous waste was accepted by the initial transporter or received by the recovery facility, whichever is applicable.

(2) The periods of retention referred to in this section are extended automatically during the course of any unresolved enforcement action regarding the regulated activity or as requested by the Administrator.

[61 FR 16310, Apr. 12, 1996, as amended at 71 FR 40272, July 14, 2006]

§ 262.88 Pre-approval for U.S. Recovery Facilities. [Reserved]

top

§ 262.89 OECD Waste Lists.

top

(a) *General.* For the purposes of this Subpart, a waste is considered hazardous under U.S. national procedures, and hence subject to this Subpart, if the waste:

(1) Meets the Federal definition of hazardous waste in 40 CFR 261.3; and

(2) Is subject to either the Federal RCRA manifesting requirements at 40 CFR part 262, subpart B, to the universal waste management standards of 40 CFR part 273, or to State requirements analogous to 40 CFR part 273.

(b) If a waste is hazardous under paragraph (a) of this section and it appears on the amber or red list, it is subject to amber- or red-list requirements respectively;

(c) If a waste is hazardous under paragraph (a) of this section and it does not appear on either amber or red lists, it is subject to red-list requirements.

(d) The appropriate control procedures for hazardous wastes and hazardous waste mixtures are addressed in §262.82.

(e) The OECD Green List of Wastes (revised May 1994), Amber List of Wastes and Red List of Wastes (both revised May 1993) as set forth in Appendix 3, Appendix 4 and Appendix 5, respectively, to the OECD Council Decision C(92)39/FINAL (Concerning the Control of Transfrontier Movements of Wastes Destined for Recovery Operations) are incorporated by reference. These incorporations by reference were approved by the Director of the Federal Register in accordance with 5 U.S.C. 552(a) and 1 CFR part 51 on July 11, 1996. These materials are incorporated as they exist on the date of the approval and a notice of any change in these materials will be published in theFederal Register.The materials are available for inspection at: the U.S. Environmental Protection Agency, RCRA Information Center (RIC), 1235 Jefferson-Davis Highway, first floor, Arlington, VA 22203 (Docket # F-94-IEHF-FFFFF) or at the National Archives and Records Administration (NARA), and may be obtained from the Organisation for Economic Co-operation and Development, Environment Direcorate, 2 rue Andre Pascal, 75775 Paris Cedex 16, France. For information on the availability of this material at NARA, call 202–741–6030, or go to: *http://www.archives.gov/federal_register/code_of_federal_regulations/ibr_locations.html.*

[61 FR 16310, Apr. 12, 1996, as amended at 69 FR 18803, Apr. 9, 2004]

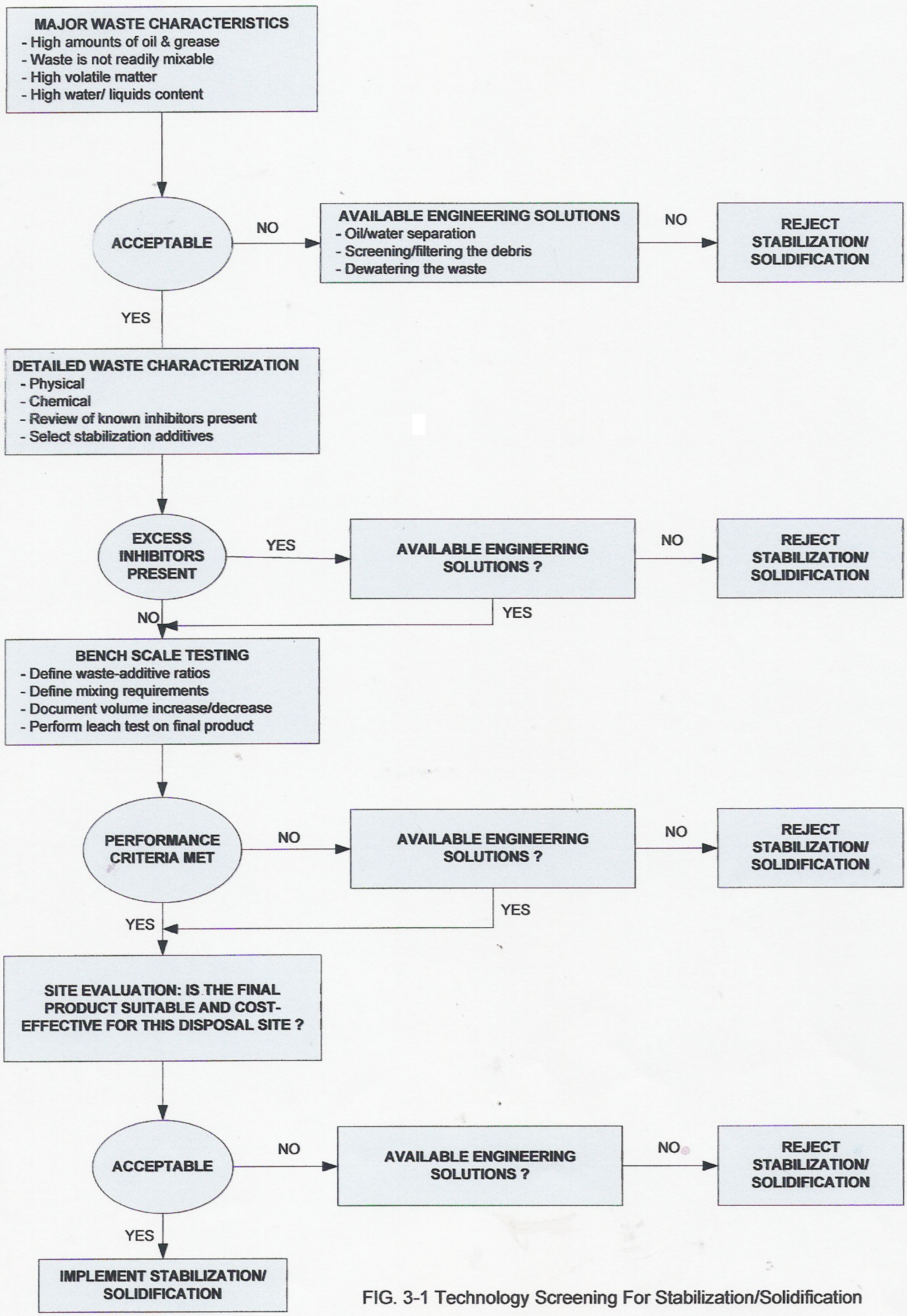

FIG. 3-1 Technology Screening For Stabilization/Solidification

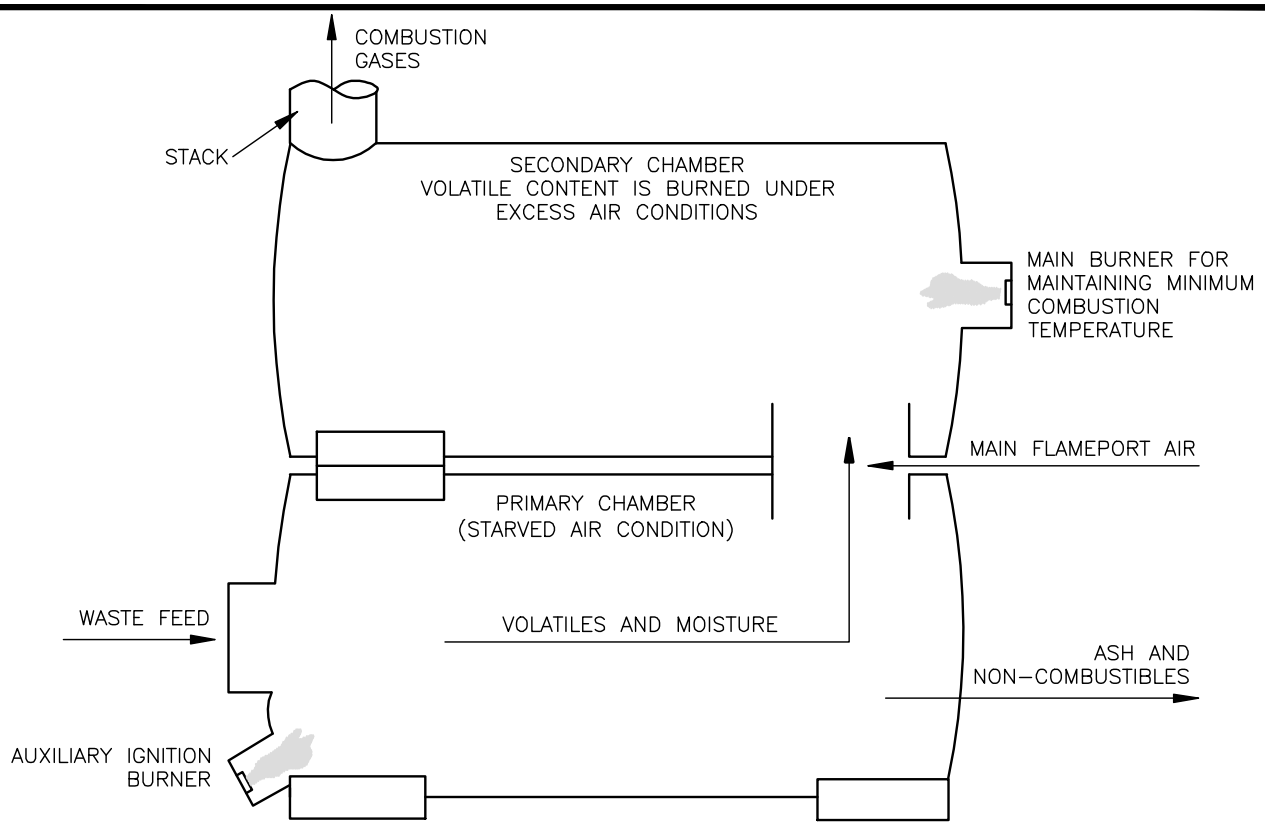

FIG. 3-2 FIXED HEARTH INCINERATOR

(NOT TO SCALE)

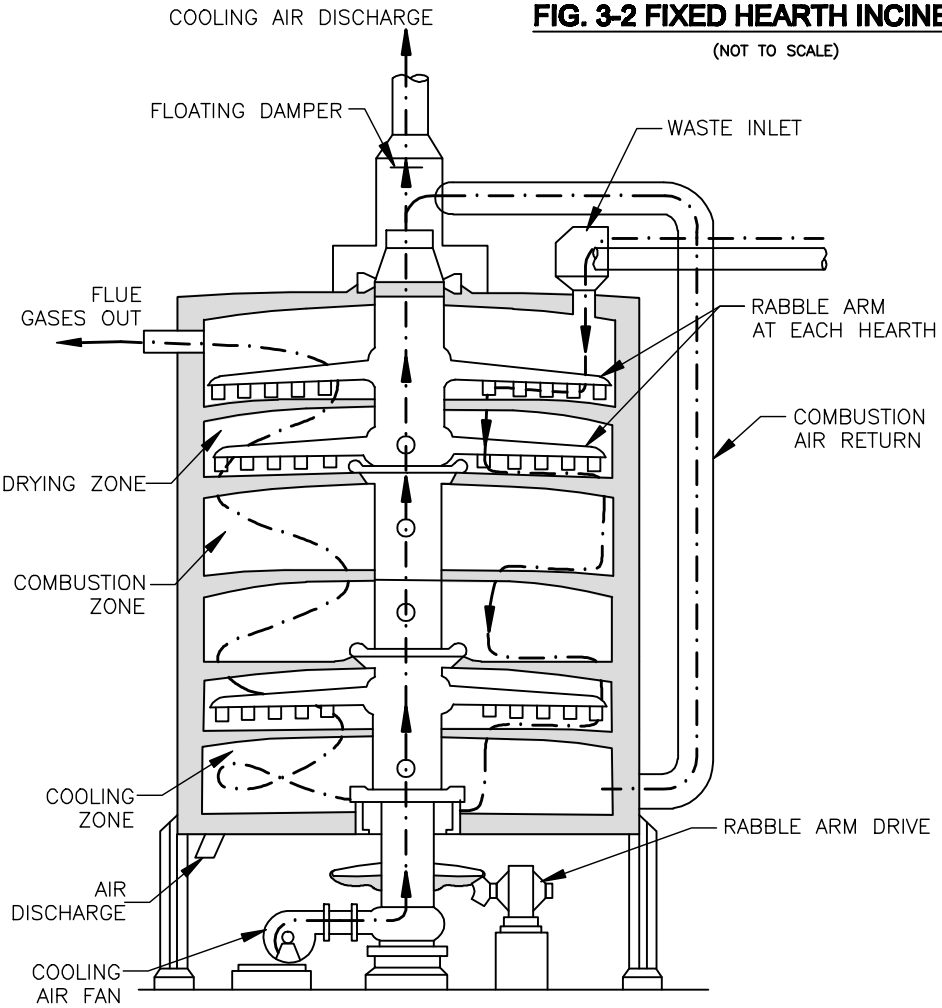

FIG. 3-3 MULTIPLE HEARTH INCINERATOR

(NOT TO SCALE)

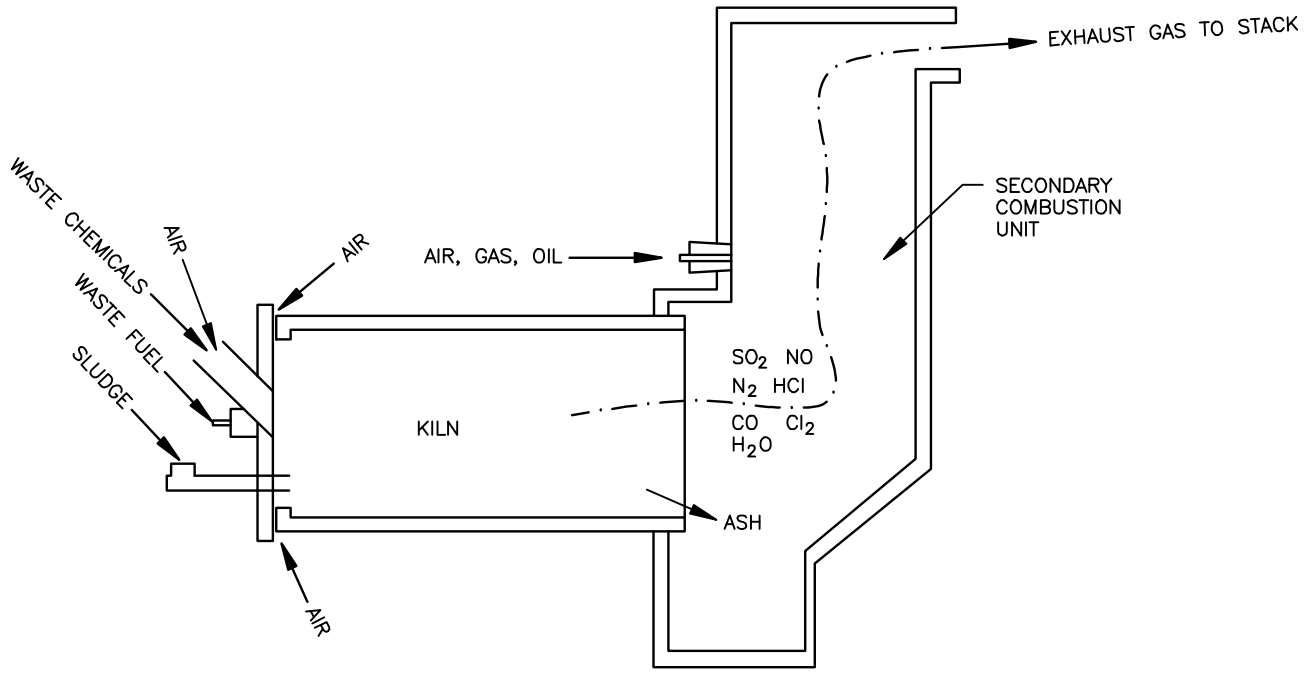

FIG. 3-4 ROTARY KILN WITH SECONDARY COMBUSTION UNIT

(NOT TO SCALE)

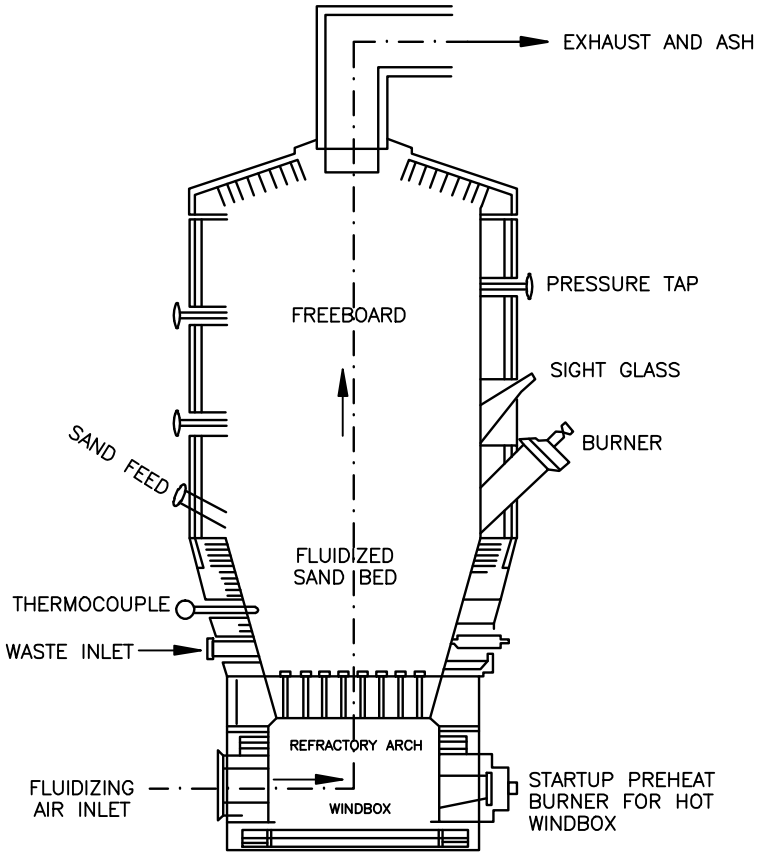

FIG. 3-5 FLUIDIZED BED INCINERATOR

(NOT TO SCALE)

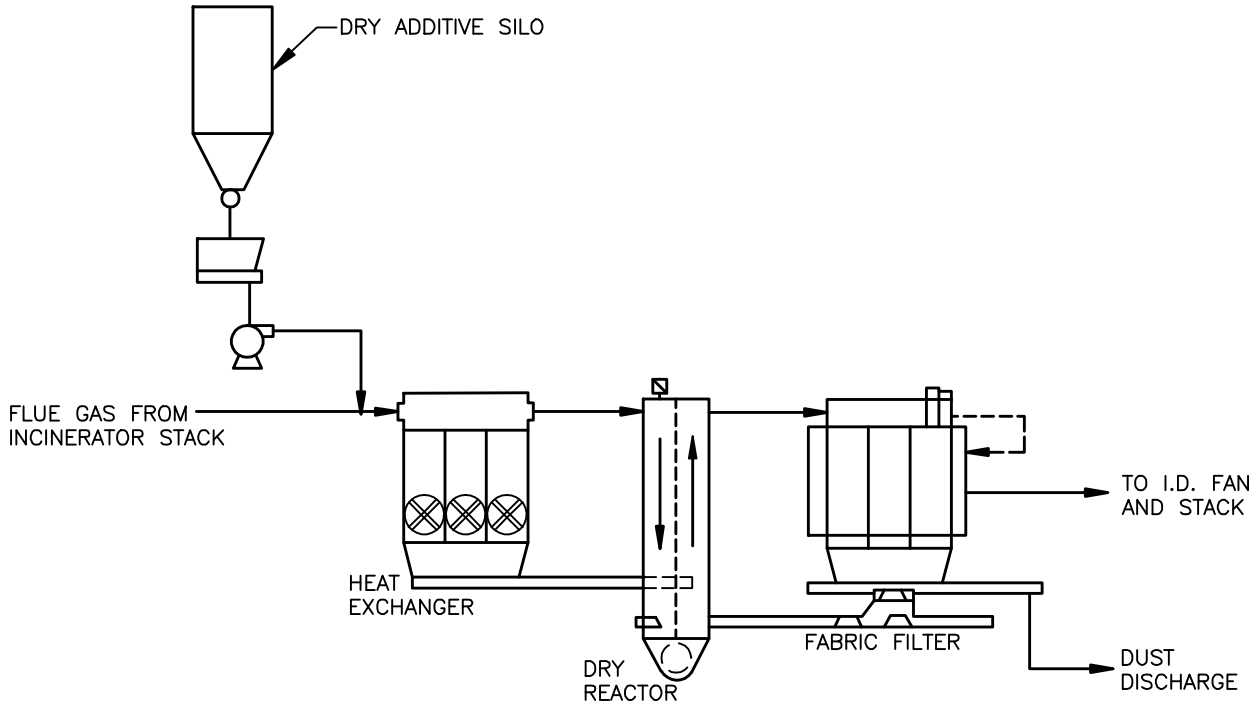

DRY AIR POLLUTION CONTROL SYSTEM

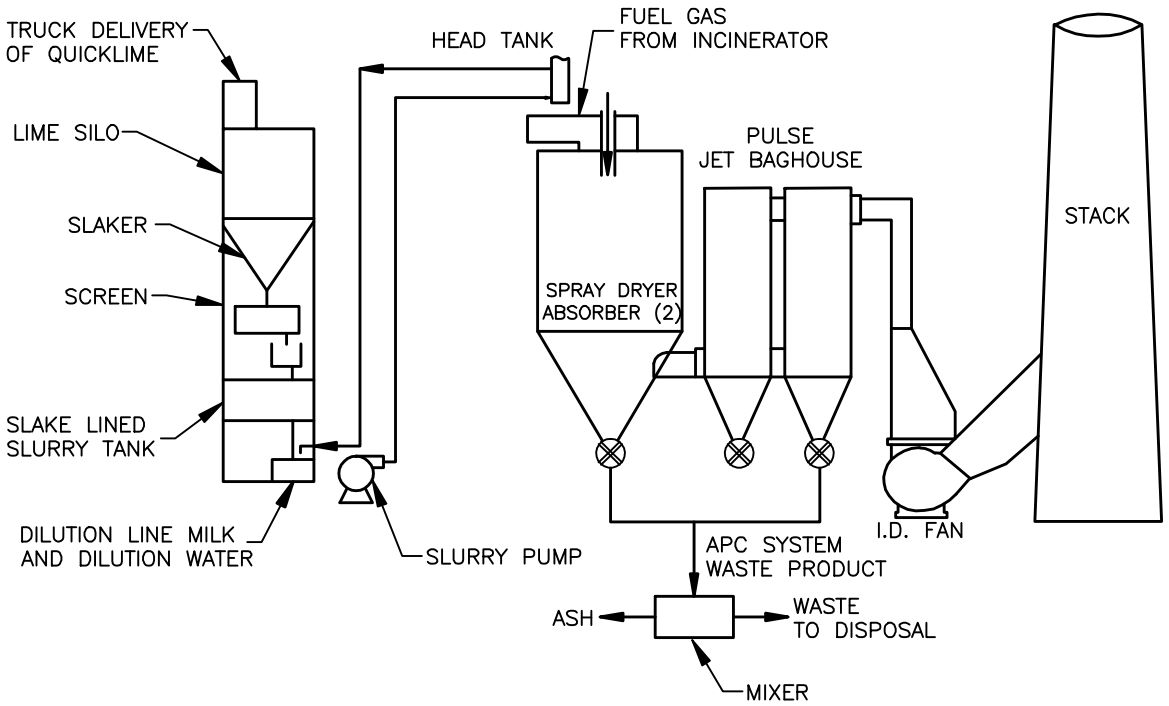

WET AIR POLLUTION CONTROL SYSTEM

FIG. 3-6 AIR EMISSION POLLUTION CONTROL SYSTEMS

(NOT TO SCALE)

FILE: G:\CLIENTS\E\ENVIROASSOCIATES\EGYPT WASTE TREATMENT\2009 REPORT\FIG 3-6.DWG, DATE: 04/08/2009 12:41:22PM

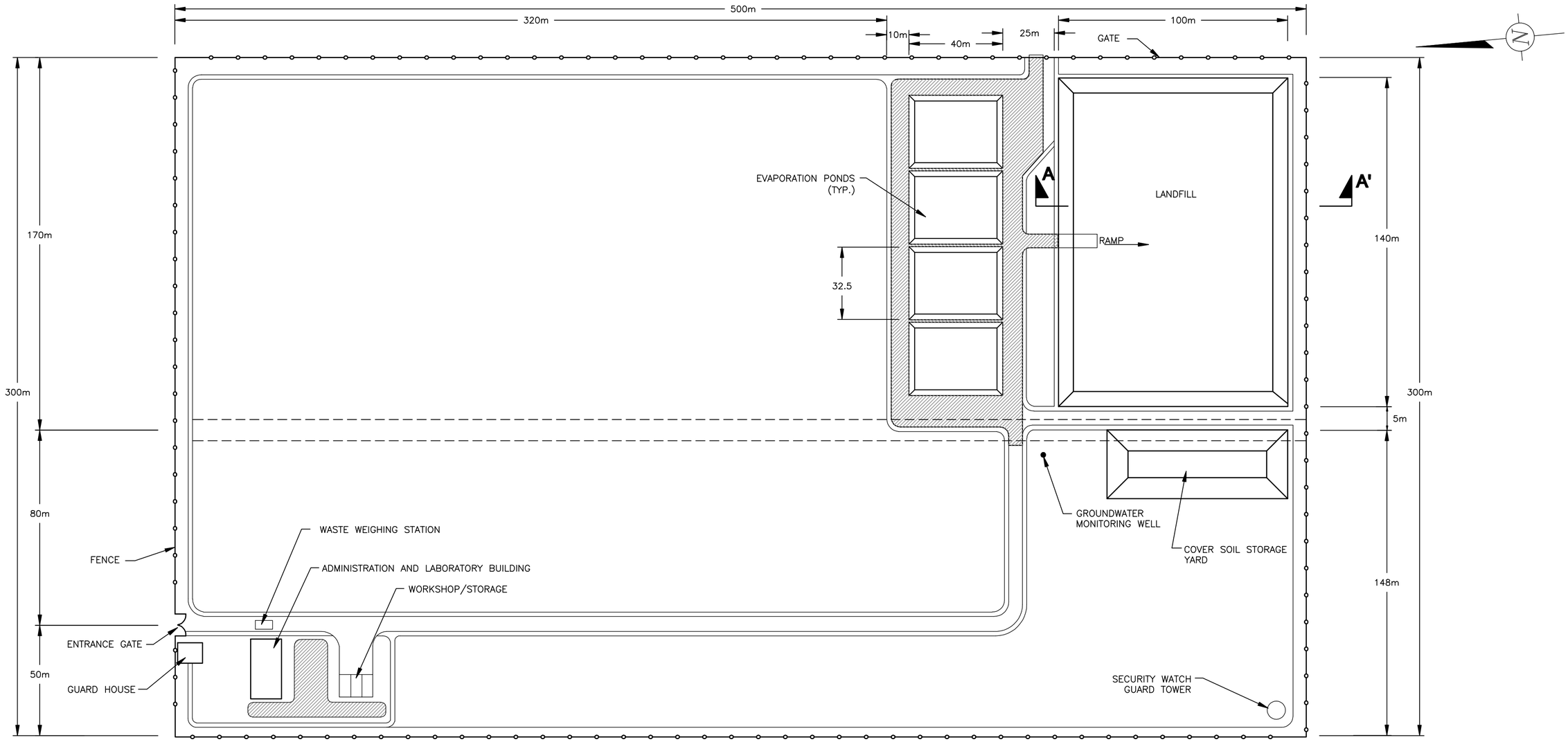

PLAN

1 50
SCALE: 1:50

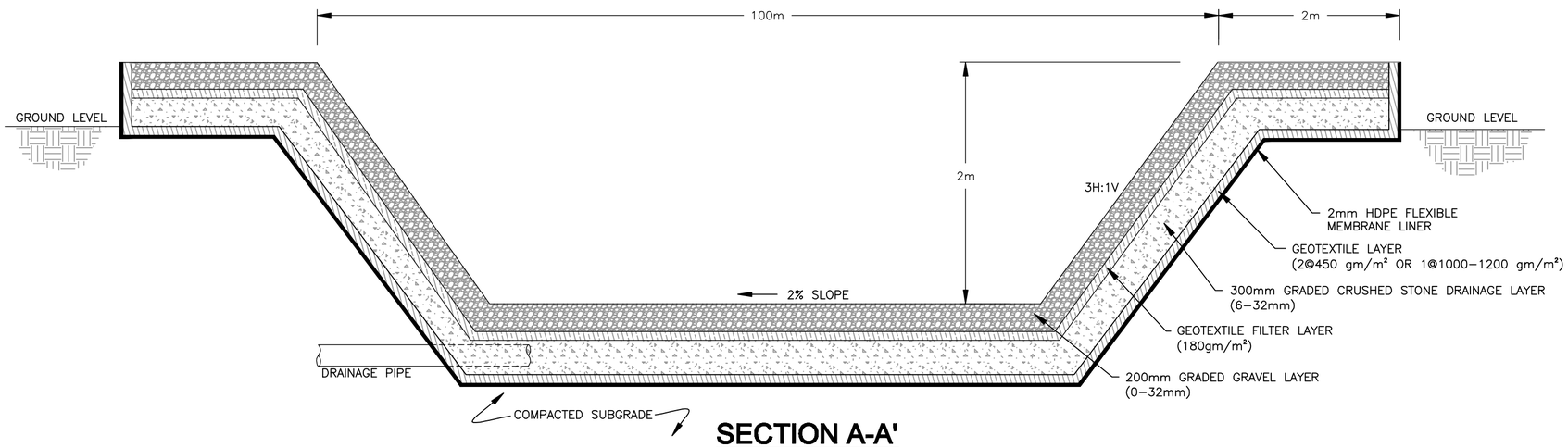

SECTION A-A'

NOT TO SCALE

NOTE: ALL DIMENSIONS ARE IN METERS

MINISTRY OF ENVIRONMENTAL AFFAIRS
ARAB REPUBLIC OF EGYPT

SITE PLAN

NASREYA HAZARDOUS WASTE TREATMENT AND DISPOSAL FACILITY
ALEXANDRIA, EGYPT

FIGURE NO:	DRAWN BY	CHKD. BY	PROJ. MGR.
4-1	MM	AD	AD
	REV NO.	DATE 3/09	SCALE AS SHOWN

ENVIRO ASSOCIATES INTERNATIONAL

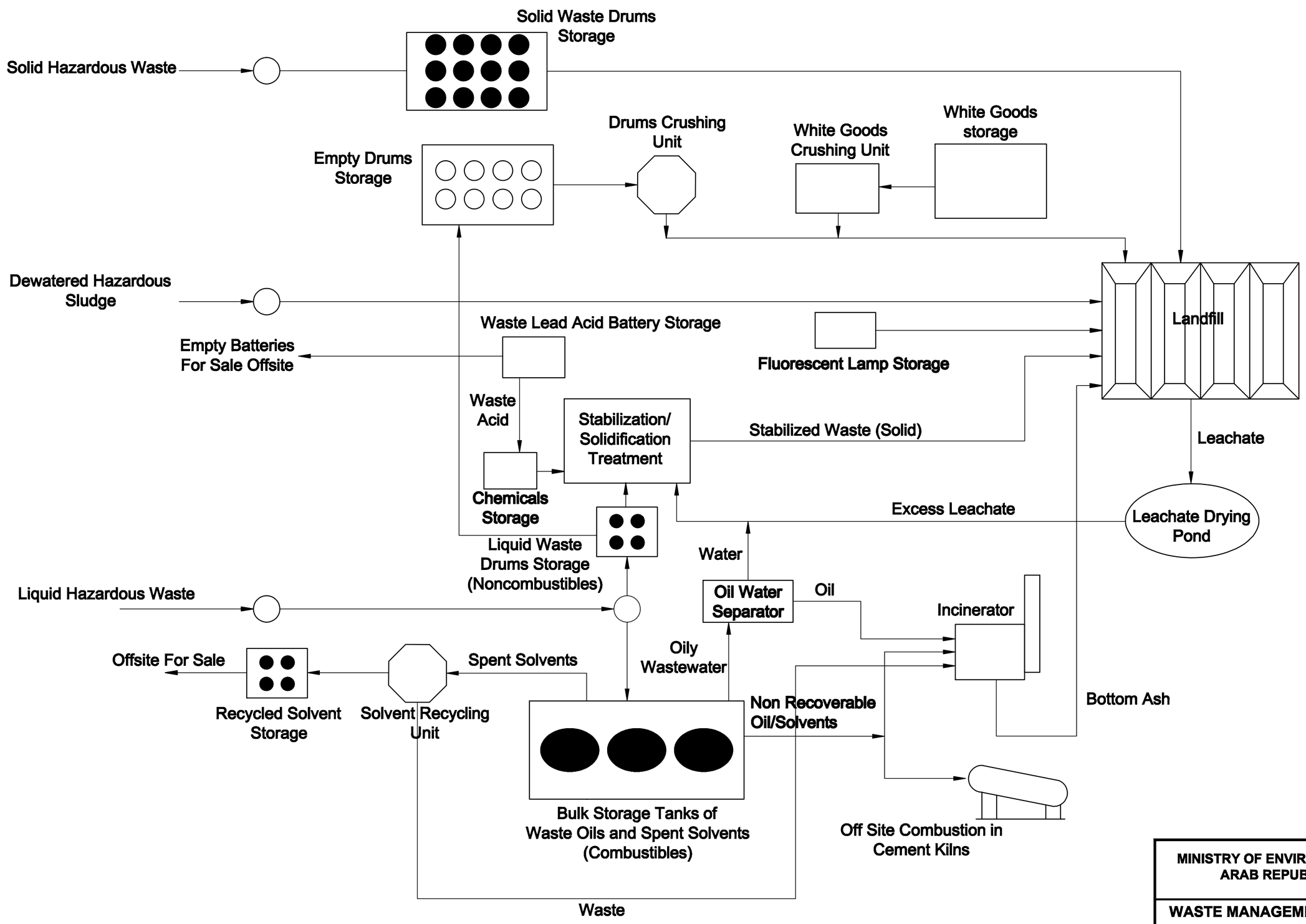

MINISTRY OF ENVIRONMENTAL AFFAIRS
ARAB REPUBLIC OF EGYPT

WASTE MANAGEMENT FLOW DIAGRAM

NASREYA HAZARDOUS WASTE TREATMENT AND DISPOSAL FACILITY
ALEXANDRIA, EGYPT

FIGURE NO:	DRAWN BY	CHKD. BY	PROJ. MGR.
4-2	MM	AD	AD
	REV NO.	DATE 3/09	SCALE AS SHOWN

EnviroAssociates INTERNATIONAL

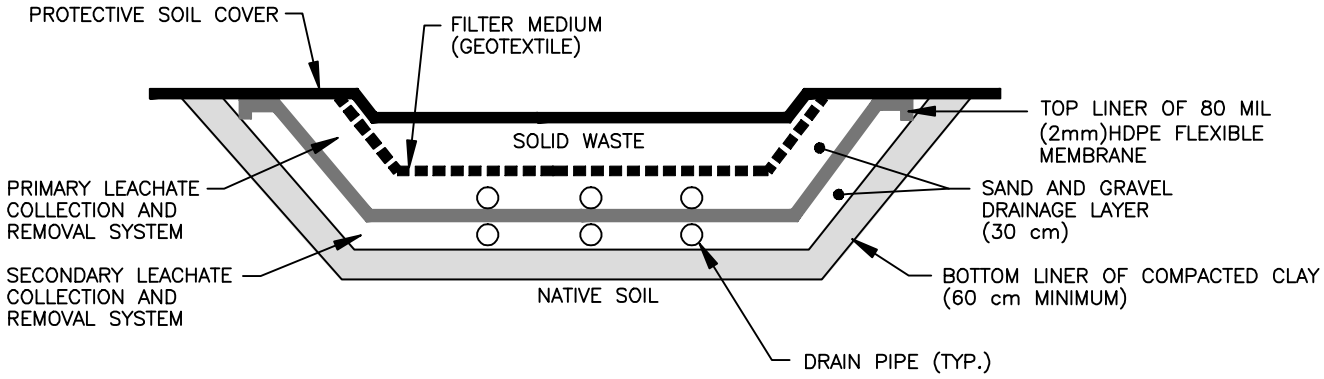

FIG. 5-1 SCHEMATIC OF A SINGLE LINER SYSTEM

(NOT TO SCALE)

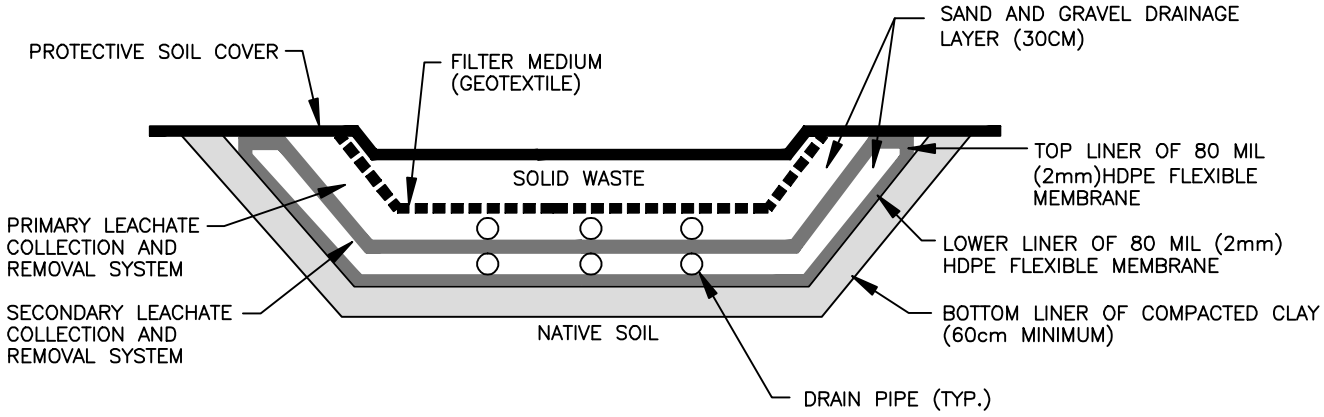

FIG. 5-2 SCHEMATIC OF A DOUBLE LINER SYSTEM

(NOT TO SCALE)

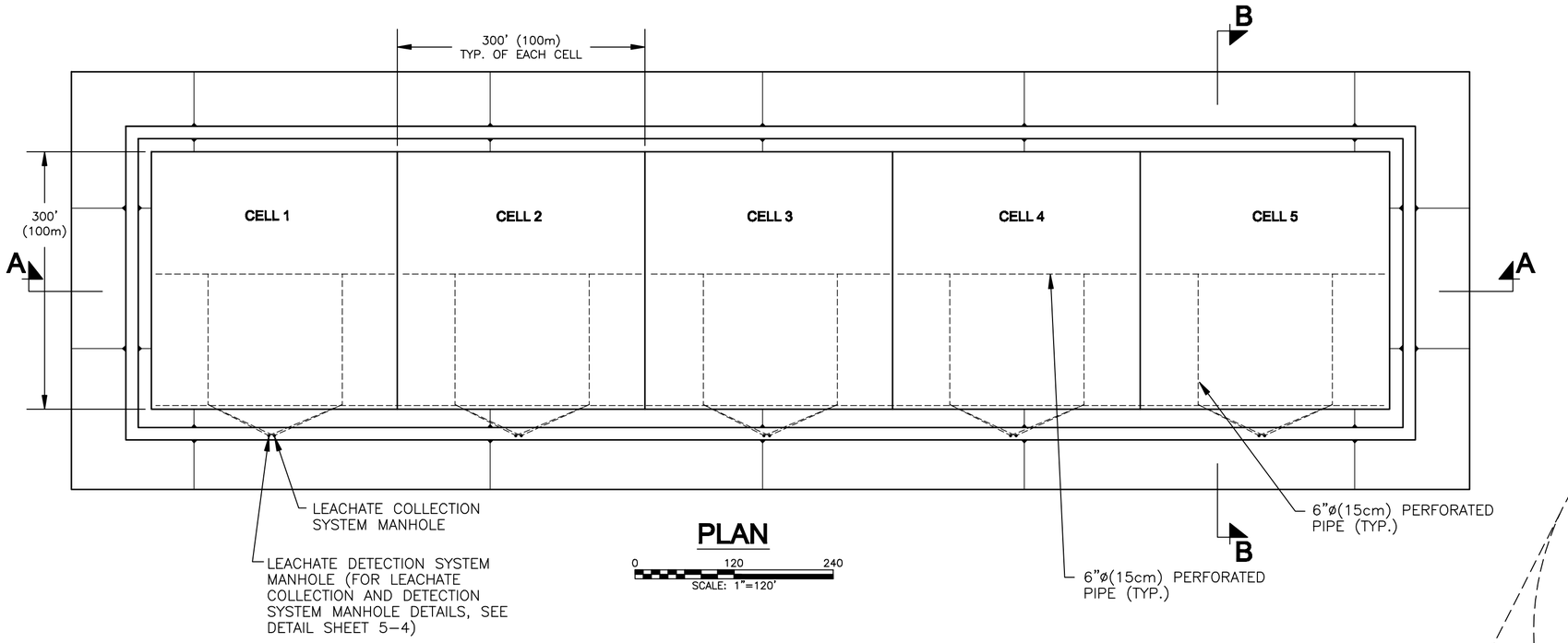

PLAN

0 120 240
SCALE: 1"=120'

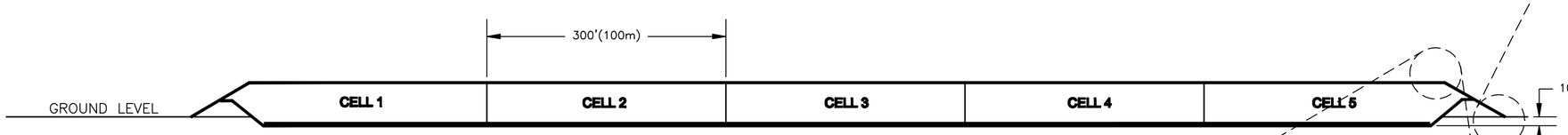

SECTION A-A

0 120 240
SCALE: 1"=120'

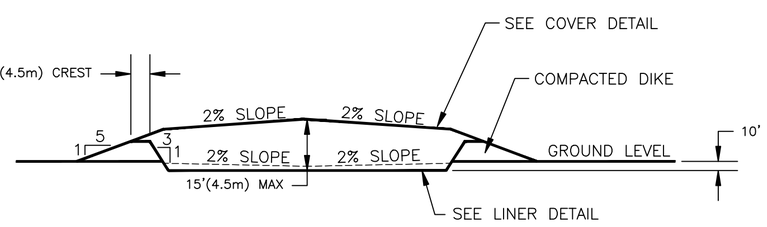

SECTION B-B

0 120 240
SCALE: 1"=120'

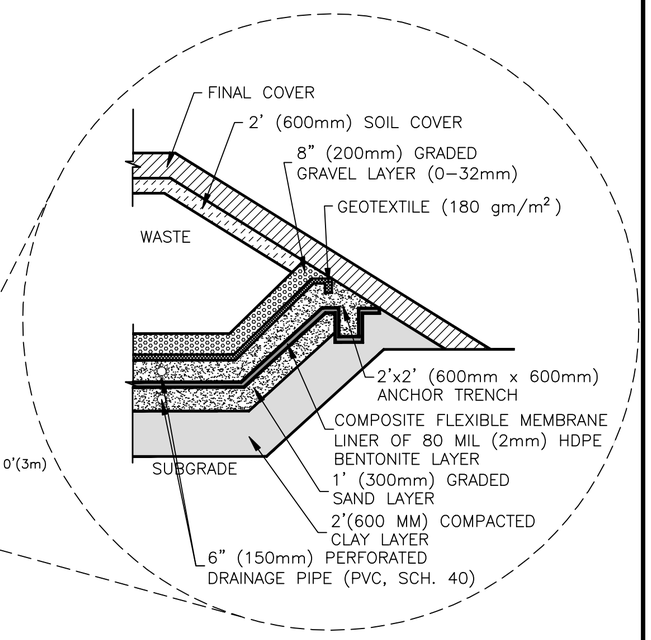

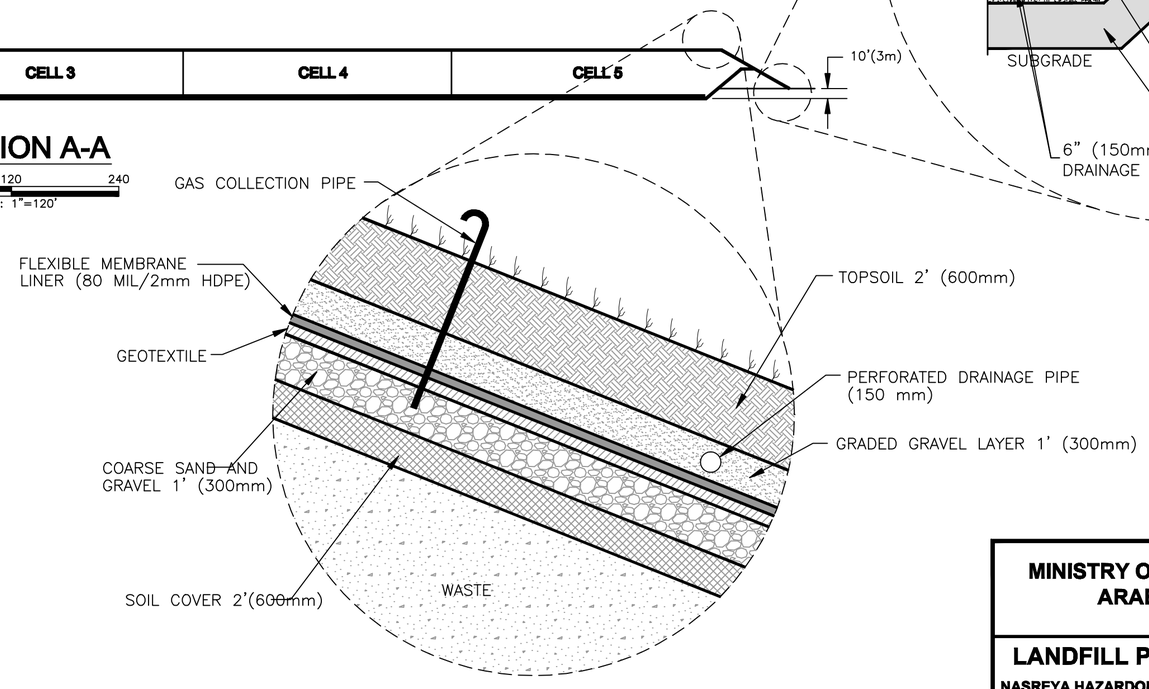

COVER DETAIL

NOT TO SCALE

MINISTRY OF ENVIRONMENTAL AFFAIRS
ARAB REPUBLIC OF EGYPT

LANDFILL PLAN AND CROSS-SECTIONS

NASREYA HAZARDOUS WASTE TREATMENT AND DISPOSAL FACILITY
ALEXANDRIA, EGYPT

FIGURE NO:	DRAWN BY	CHKD. BY	PROJ. MGR.
5-3	MM	AD	AD
	REV NO.	DATE	SCALE
		3/09	AS SHOWN

EnviroAssociates INTERNATIONAL

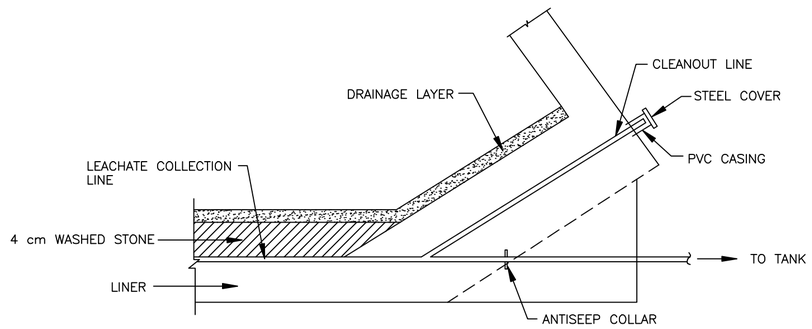

LEACHATE CLEANOUT PORT DETAIL

(NOT TO SCALE)

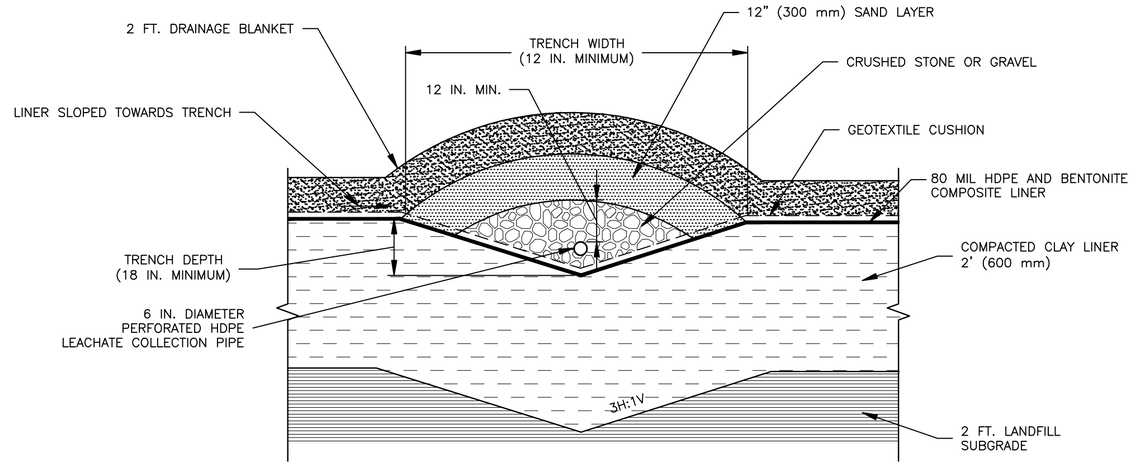

LEACHATE COLLECTION TRENCH

(NOT TO SCALE)

PLAN

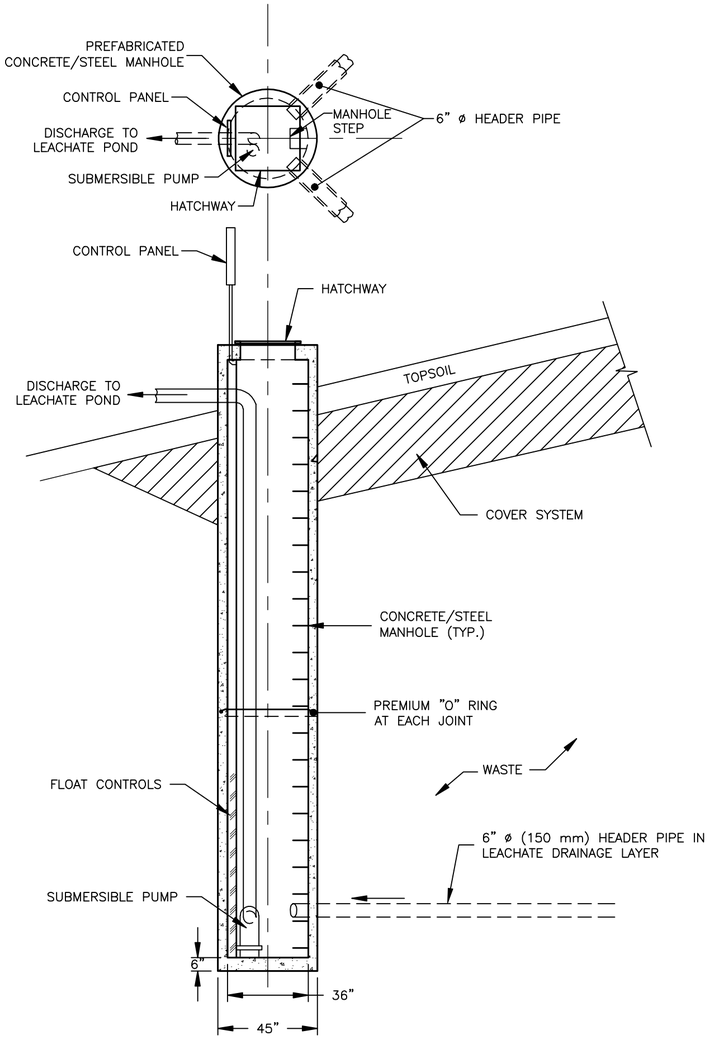

SECTION-LEACHATE COLLECTION MANHOLE

0 4
SCALE: 1"=4'

PLAN

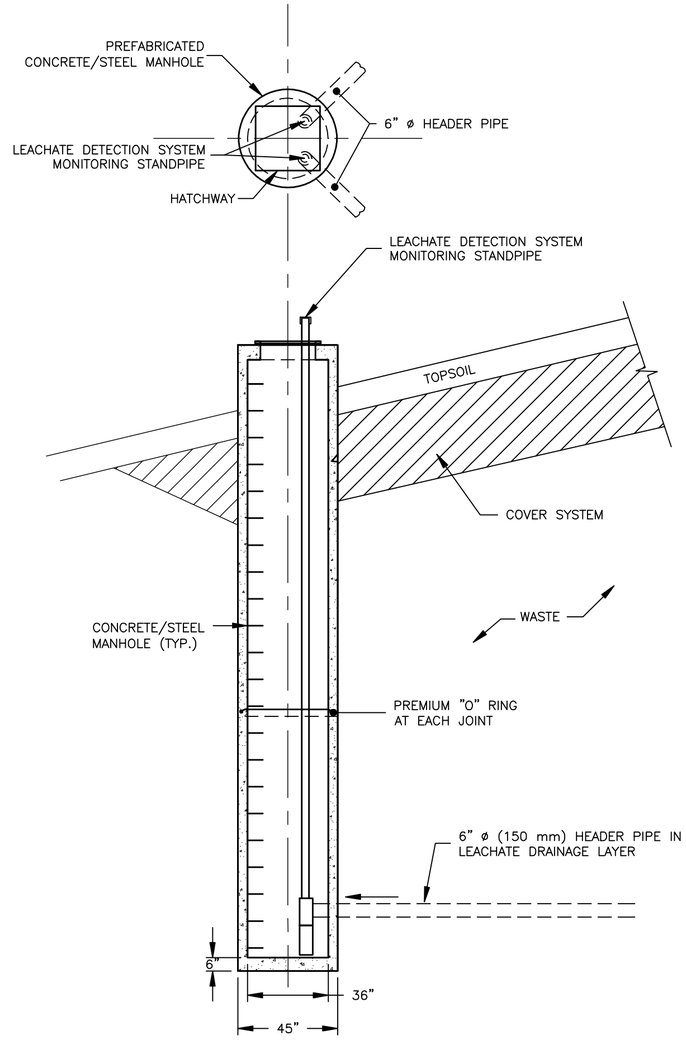

SECTION-LEACHATE DETECTION MANHOLE

0 4
SCALE: 1"=4'

MINISTRY OF ENVIRONMENTAL AFFAIRS
ARAB REPUBLIC OF EGYPT

MISCELLANEOUS DETAILS

NASREYA HAZARDOUS WASTE TREATMENT AND DISPOSAL FACILITY
ALEXANDRIA, EGYPT

FIGURE NO:	DRAWN BY	CHKD. BY	PROJ. MGR.
5-4	MM	AD	AD
	REV NO.	DATE	SCALE
		3/09	AS SHOWN

EnviroAssociates INTERNATIONAL

G:\Clients\E\EnviroAssociates\EGYPT\WASTE TREATMENT\DWG\ REPORT\PO FIGURE 4.DWG 4/09/2009 - 11:11:37 AM Layout: 1

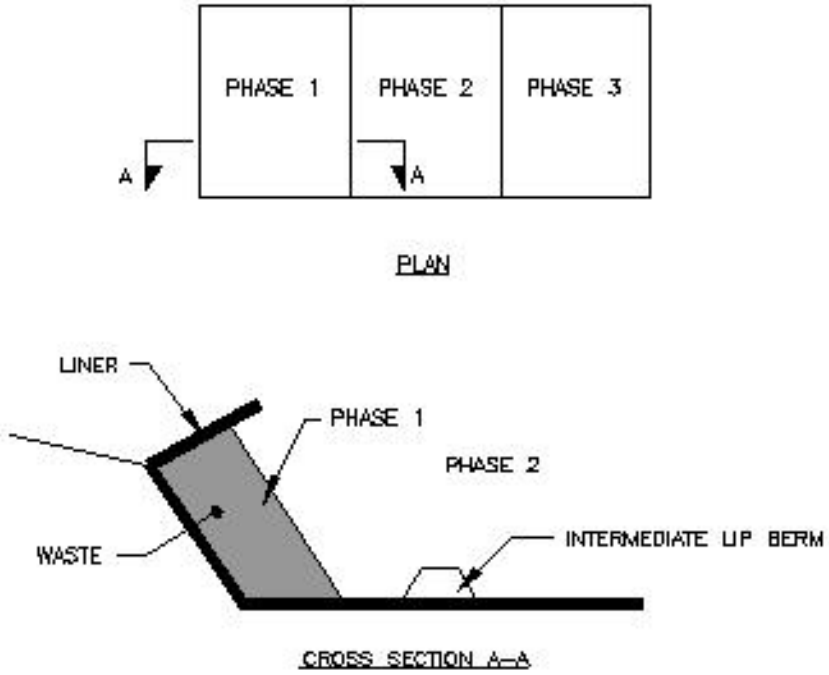

FIG. 5-5 SINGLE STAGE LANDFILL PHASING PLAN

(NOT TO SCALE)

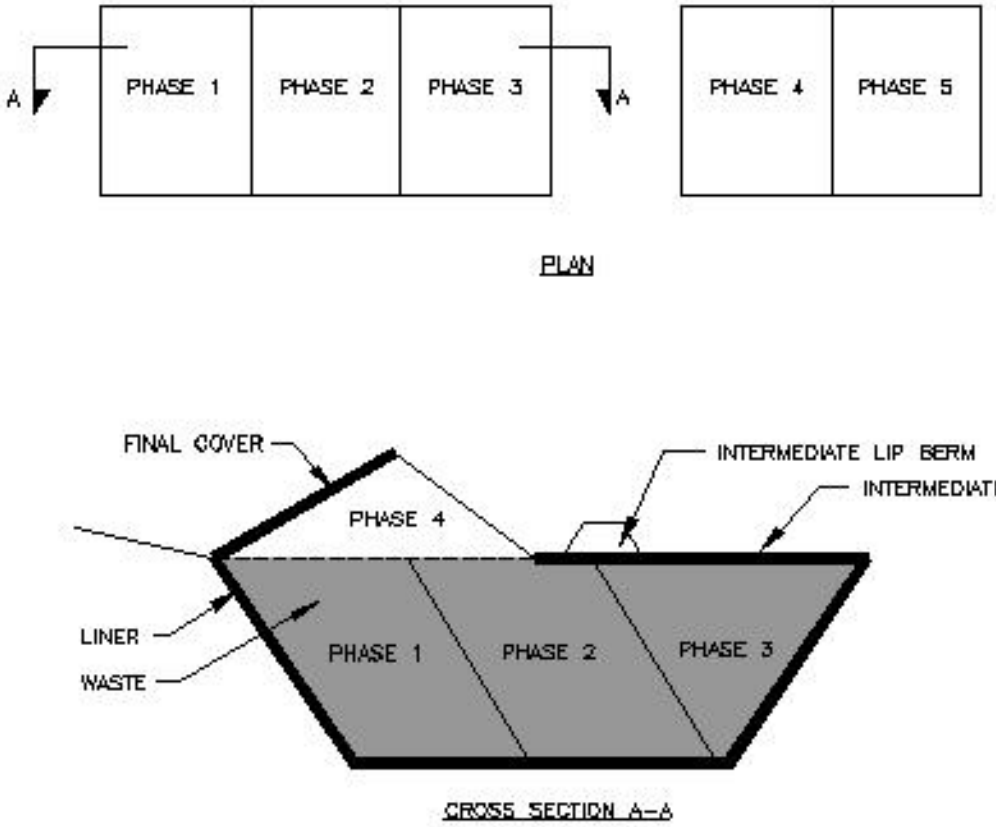

FIG. 5-6 MULTISTAGE PHASING PLAN

(NOT TO SCALE)

FILE: G:\CLIENTS\E\EMIRGASIGATES\EGYPT WASTE TREATMENT\2009 REPORT\FIG 5-5_5-6.DWG, DATE: 09/09/2009 10:49:30AM

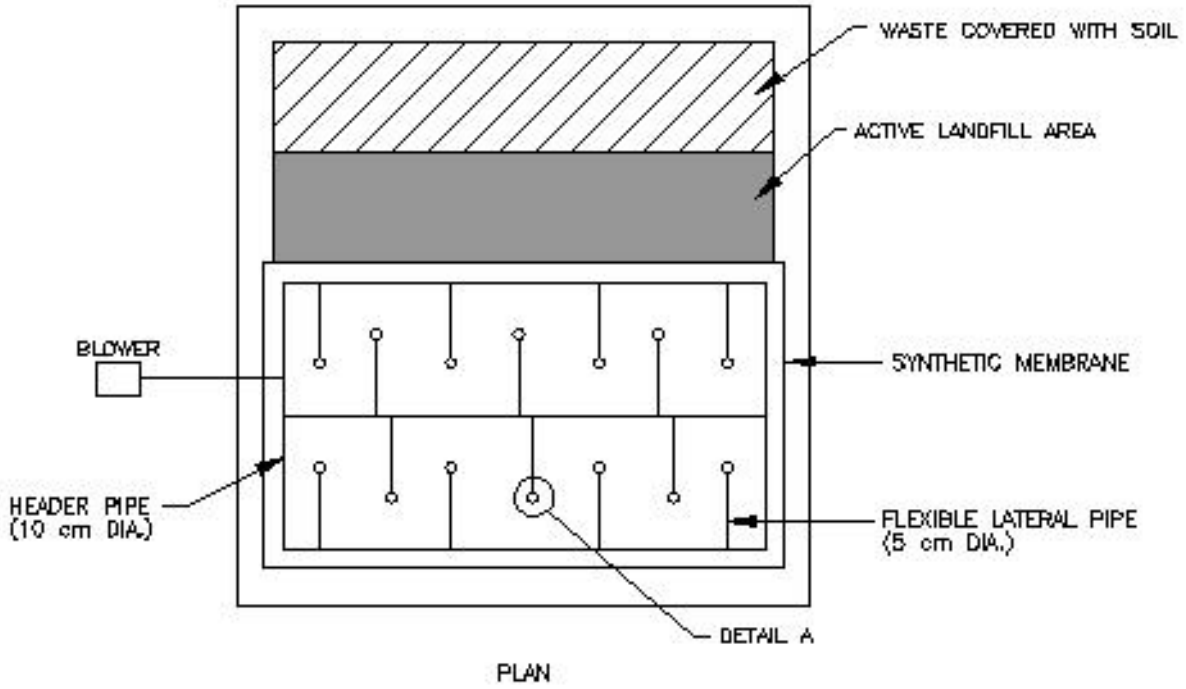

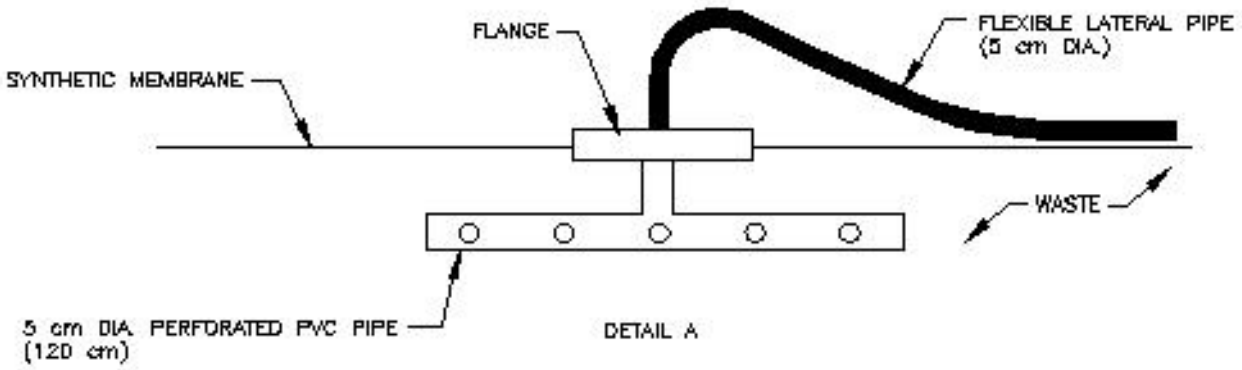

FIG. 5-7 TYPICAL TEMPORARY LANDFILL GAS COLLECTION SYSTEM

(NOT TO SCALE)

FILE: G:\CLIENTS\E\ENVIRONASSOCIATES\EGYPT WASTE TREATMENT\2009 REPORT\FIG 5-7.DWG, DATE: 06/09/2009 10:48:48AM

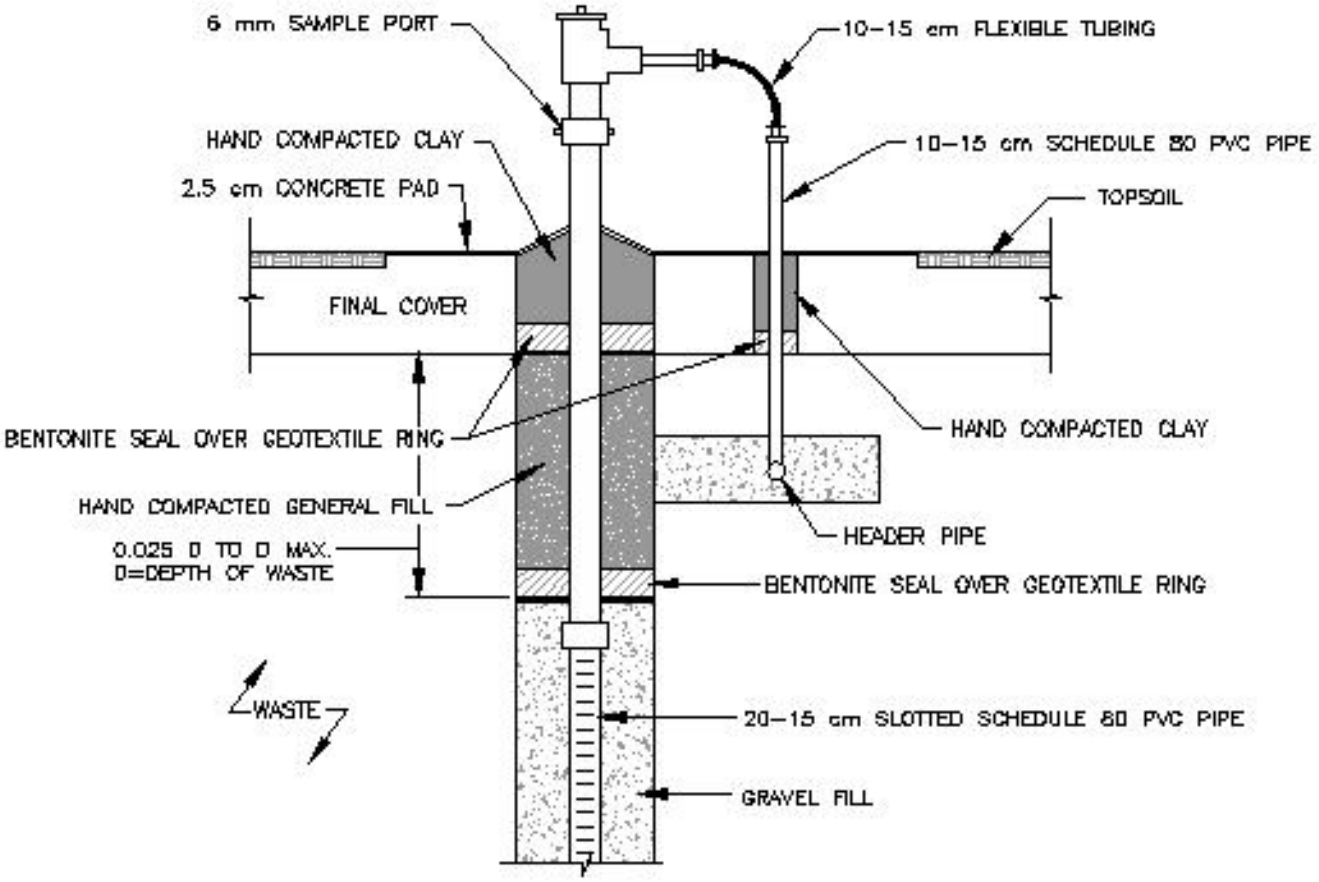

FIG. 5-8 TYPICAL DETAIL OF PERMANENT LANDFILL GAS EXTRACTION WELL

(NOT TO SCALE)

FILE: G:\CLIENTS\E\ENVIROASSOCIATES\EGYPT WASTE TREATMENT\2009 REPORT\FIG 5-8.DWG, DATE: 08/08/2009 10:50:21AM

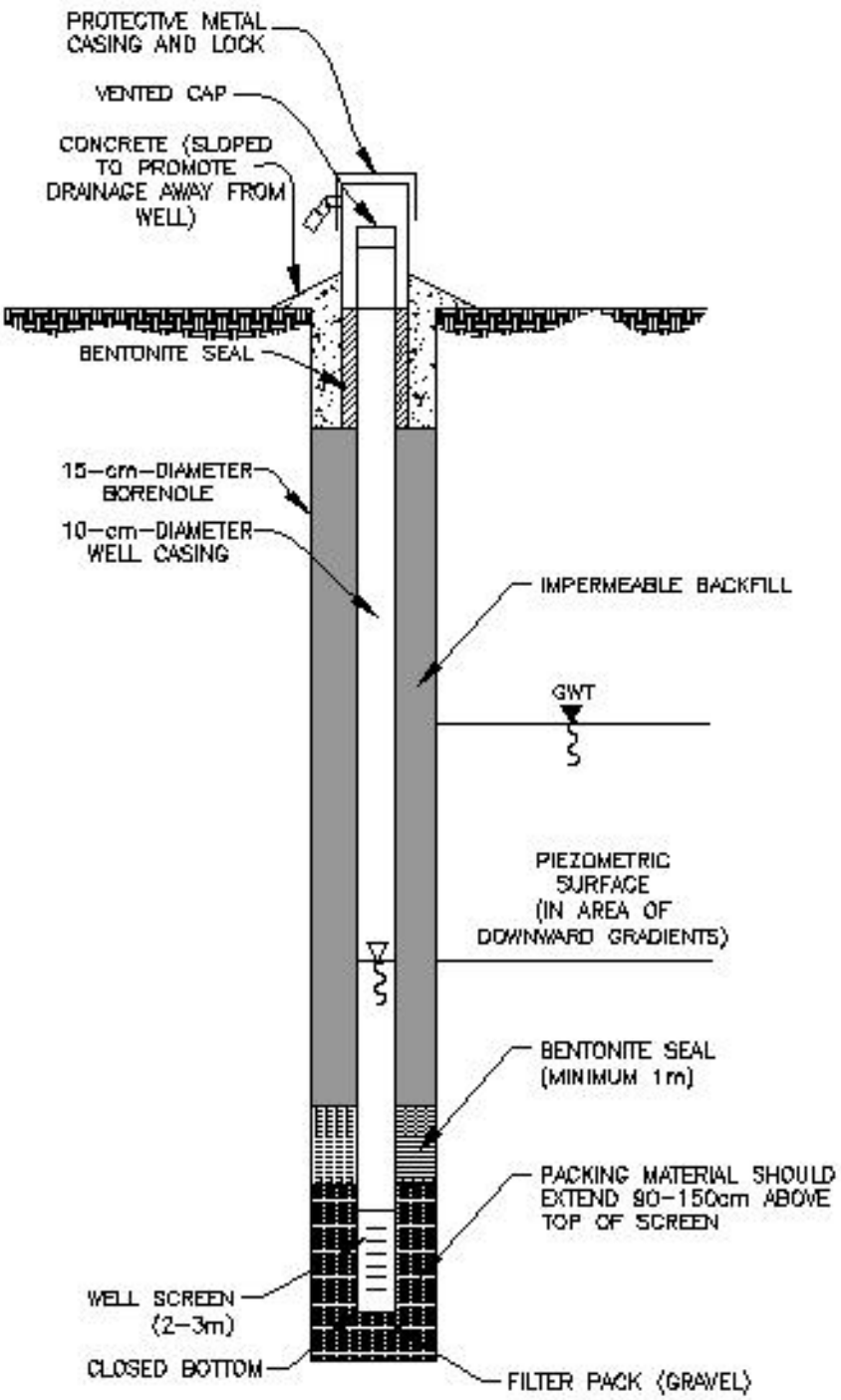

FIG. 5-9 TYPICAL DETAIL OF A MONITORING WELL OR PIEZOMETER

(NOT TO SCALE)

FILE: G:\CLIENTS\E\ENVIROASSOCIATES\EGYPT WASTE TREATMENT\2009 REPORT\FIG 5-9.DWG, DATE: 05/09/2009 10:51:45AM

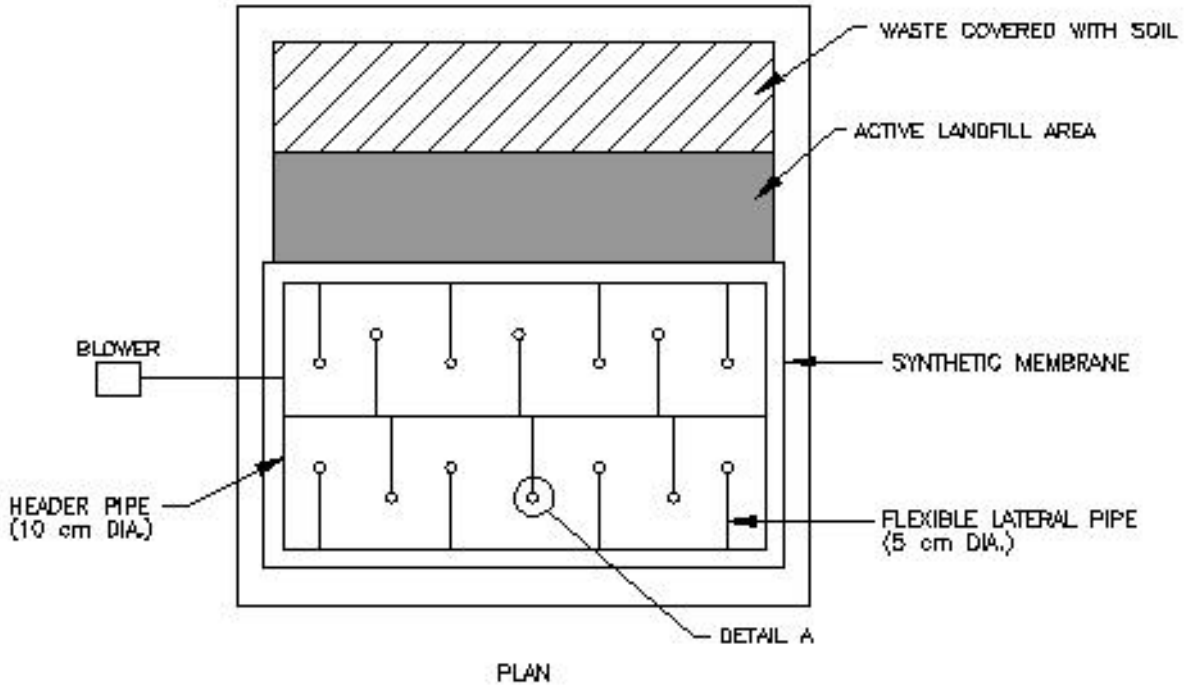

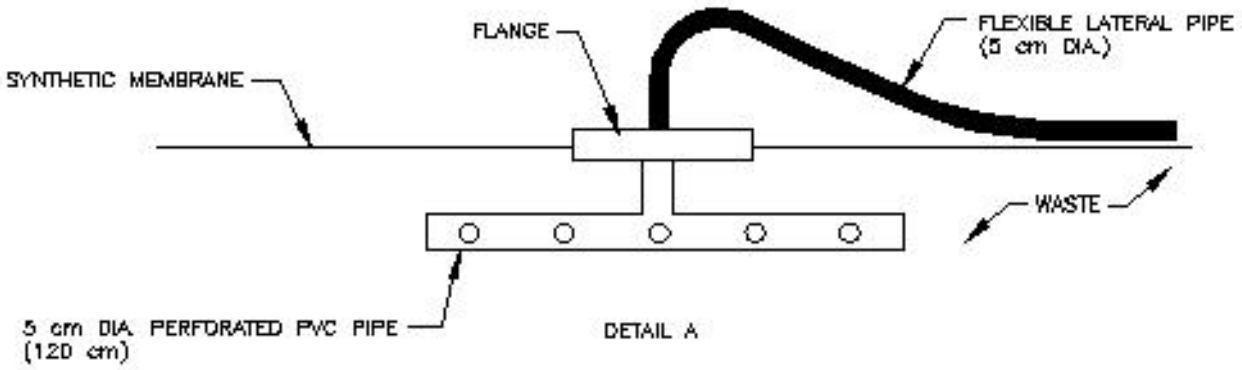

FIG. 5-7 TYPICAL TEMPORARY LANDFILL GAS COLLECTION SYSTEM

(NOT TO SCALE)

FILE: G:\CLIENTS\E\ENVIRONASSOCIATES\EGYPT WASTE TREATMENT\2009 REPORT\FIG 5-7.DWG, DATE: 06/09/2009 10:48:48AM

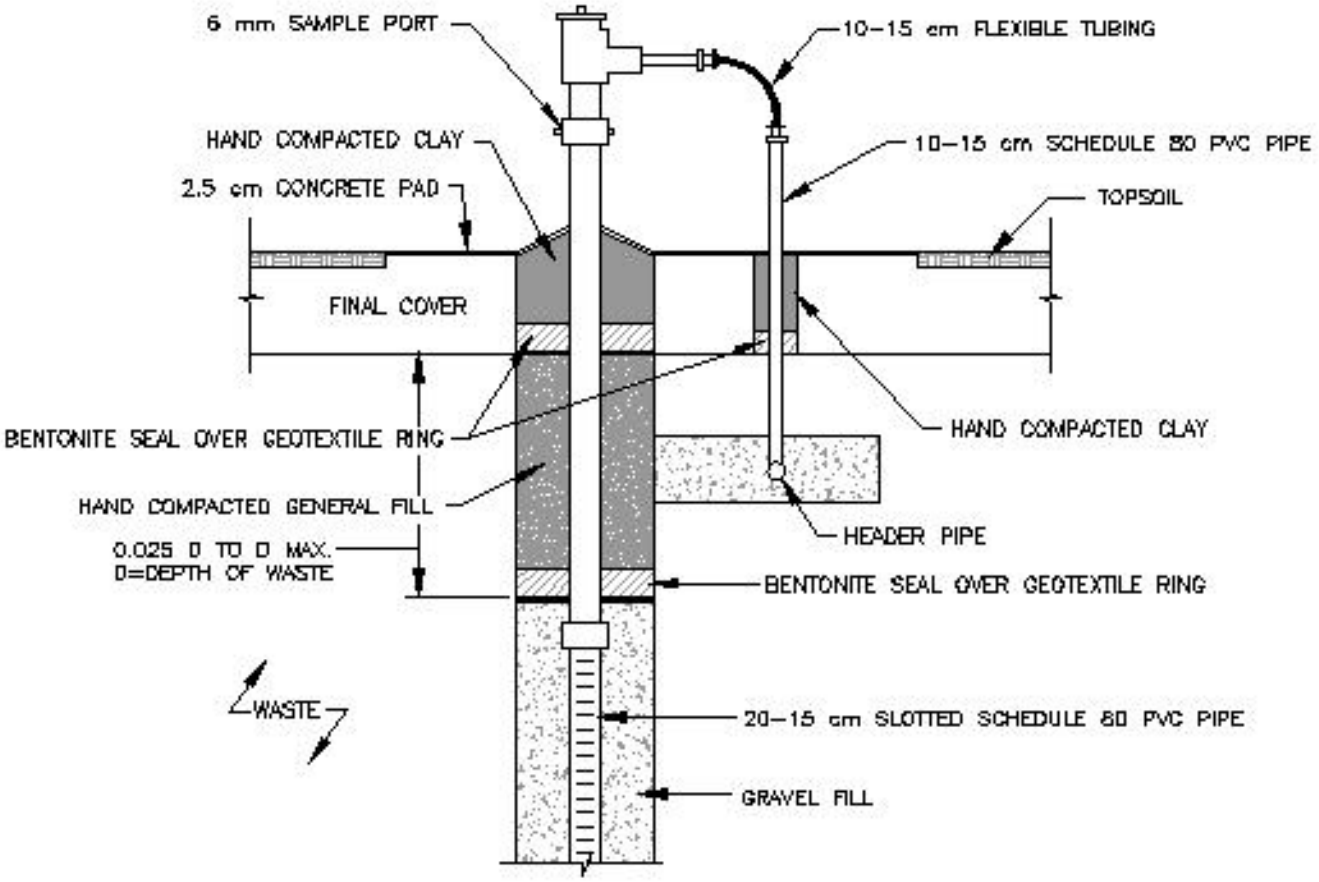

FIG. 5-8 TYPICAL DETAIL OF PERMANENT LANDFILL GAS EXTRACTION WELL

(NOT TO SCALE)

FILE: G:\CLIENTS\E\ENVIROASSOCIATES\EGYPT WASTE TREATMENT\2009 REPORT\FIG 5-8.DWG, DATE: 08/08/2009 10:50:21AM

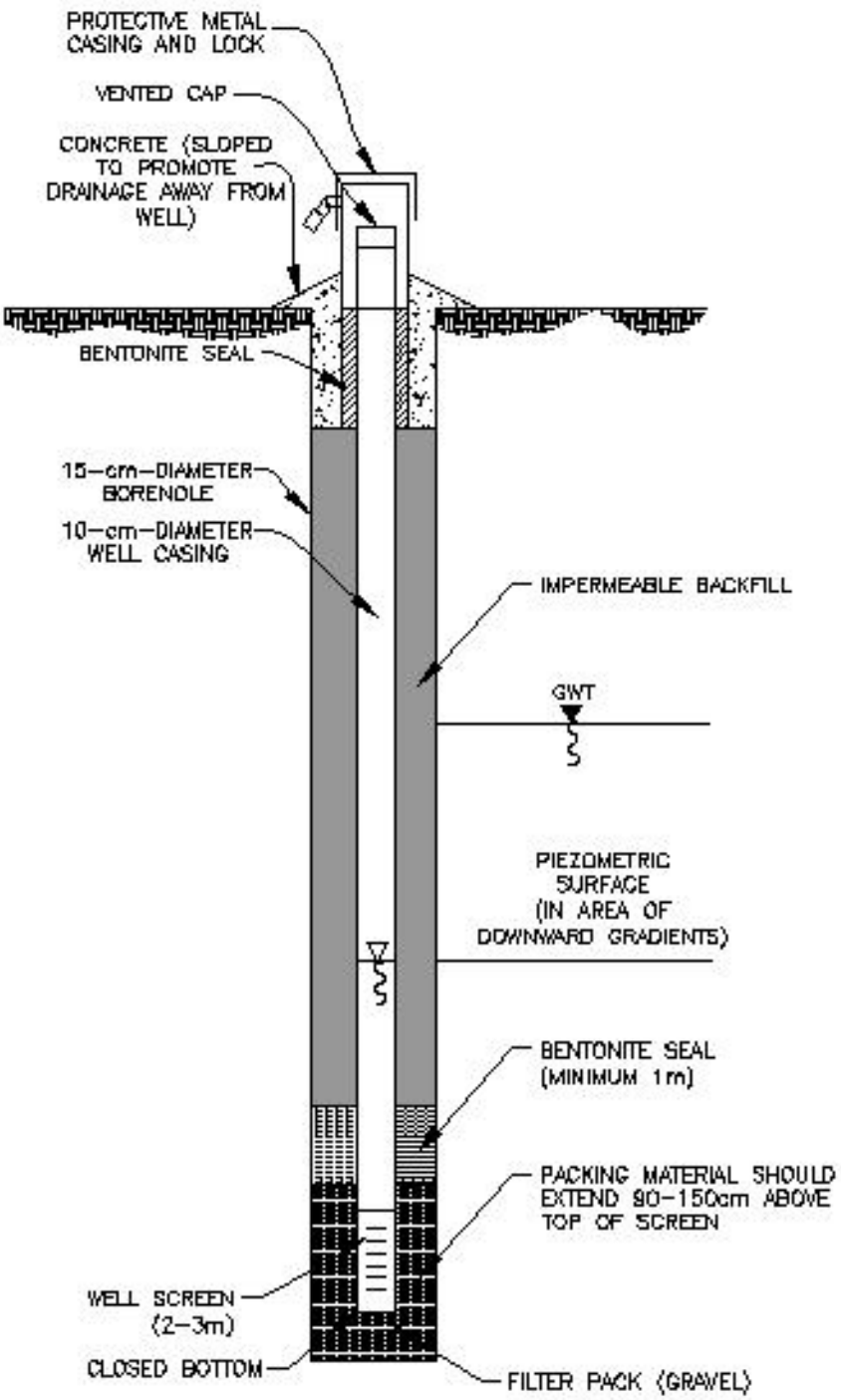

FIG. 5-9 TYPICAL DETAIL OF A MONITORING WELL OR PIEZOMETER

(NOT TO SCALE)

FILE: G:\CLIENTS\E\ENVIROASSOCIATES\EGYPT WASTE TREATMENT\2009 REPORT\FIG 5-9.DWG, DATE: 05/09/2009 10:51:45AM

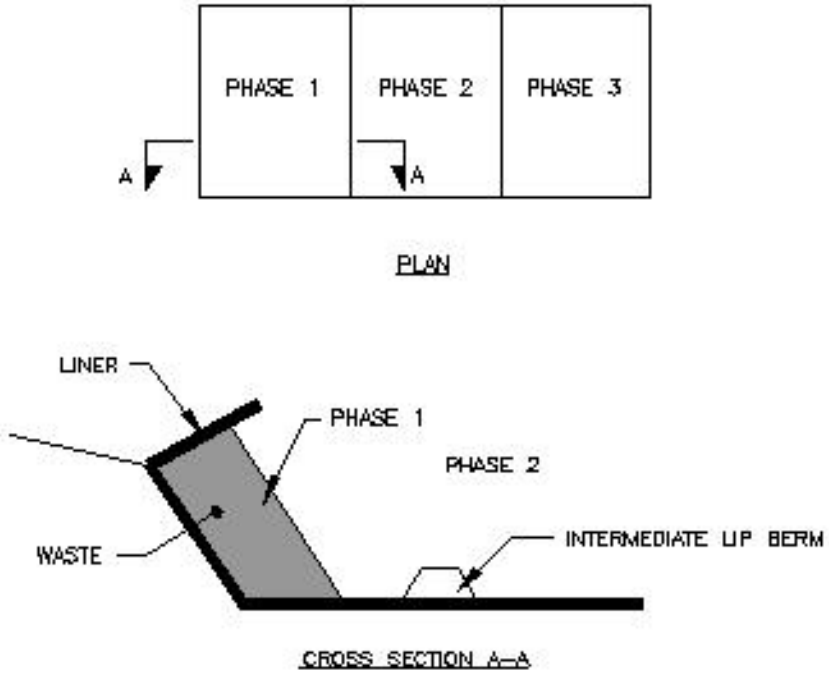

FIG. 5-5 SINGLE STAGE LANDFILL PHASING PLAN

(NOT TO SCALE)

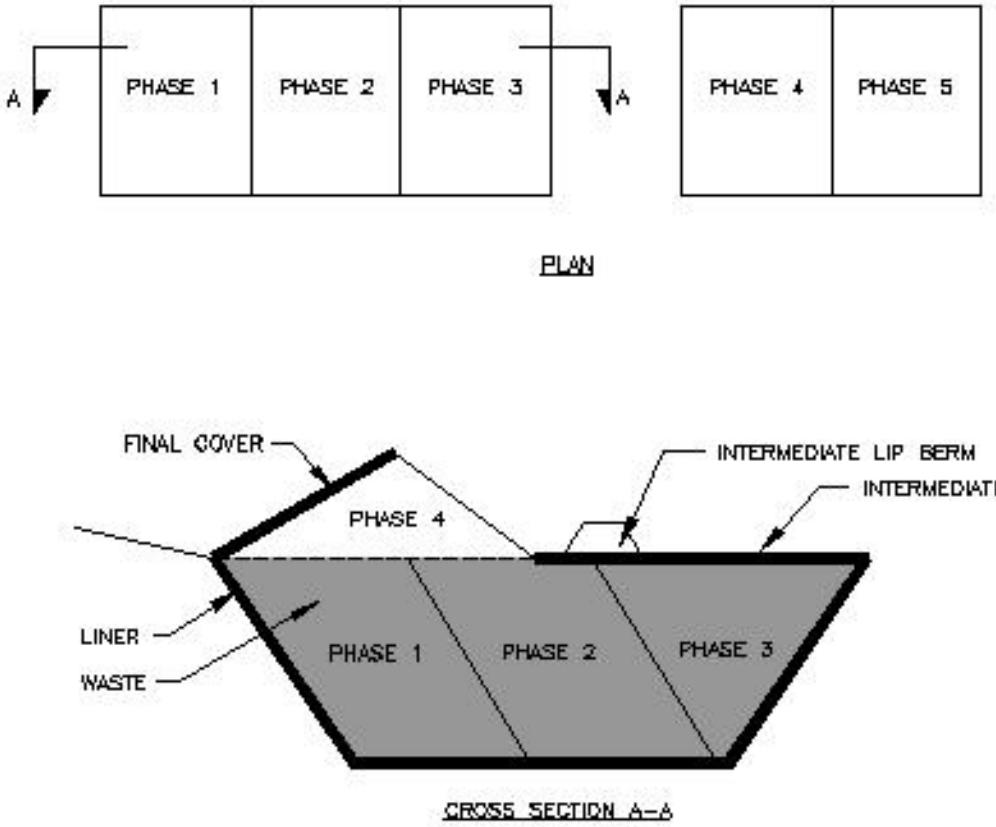

FIG. 5-6 MULTISTAGE PHASING PLAN

(NOT TO SCALE)

FILE: G:\CLIENTS\E\EMIRGASIGATES\EGYPT WASTE TREATMENT\2009 REPORT\FIG 5-5_5-6.DWG, DATE: 09/09/2009 10:49:30AM

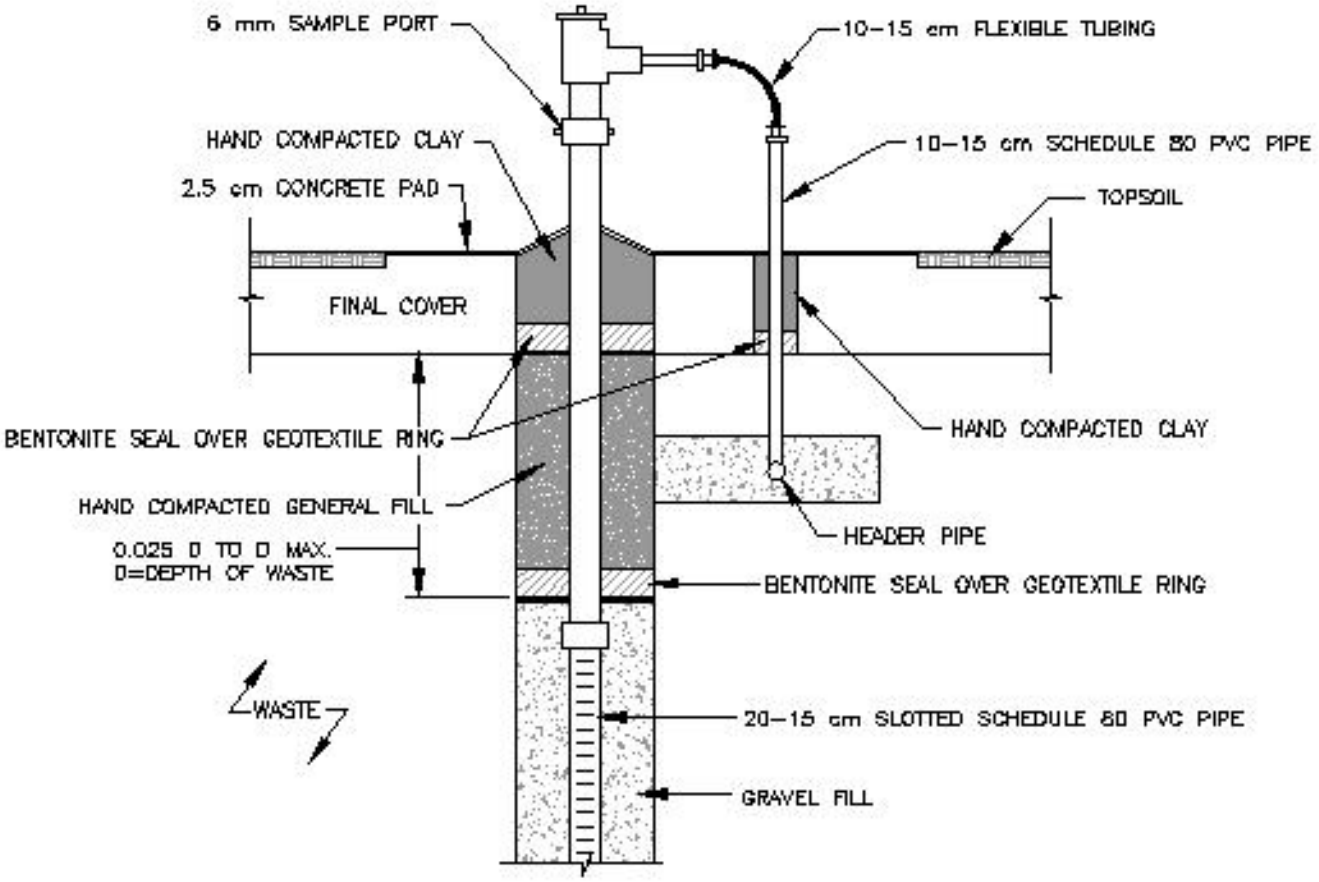

FIG. 5-8 TYPICAL DETAIL OF PERMANENT LANDFILL GAS EXTRACTION WELL

(NOT TO SCALE)

FILE: G:\CLIENTS\E\ENVIROASSOCIATES\EGYPT WASTE TREATMENT\2009 REPORT\FIG 5-8.DWG, DATE: 08/08/2009 10:50:21AM

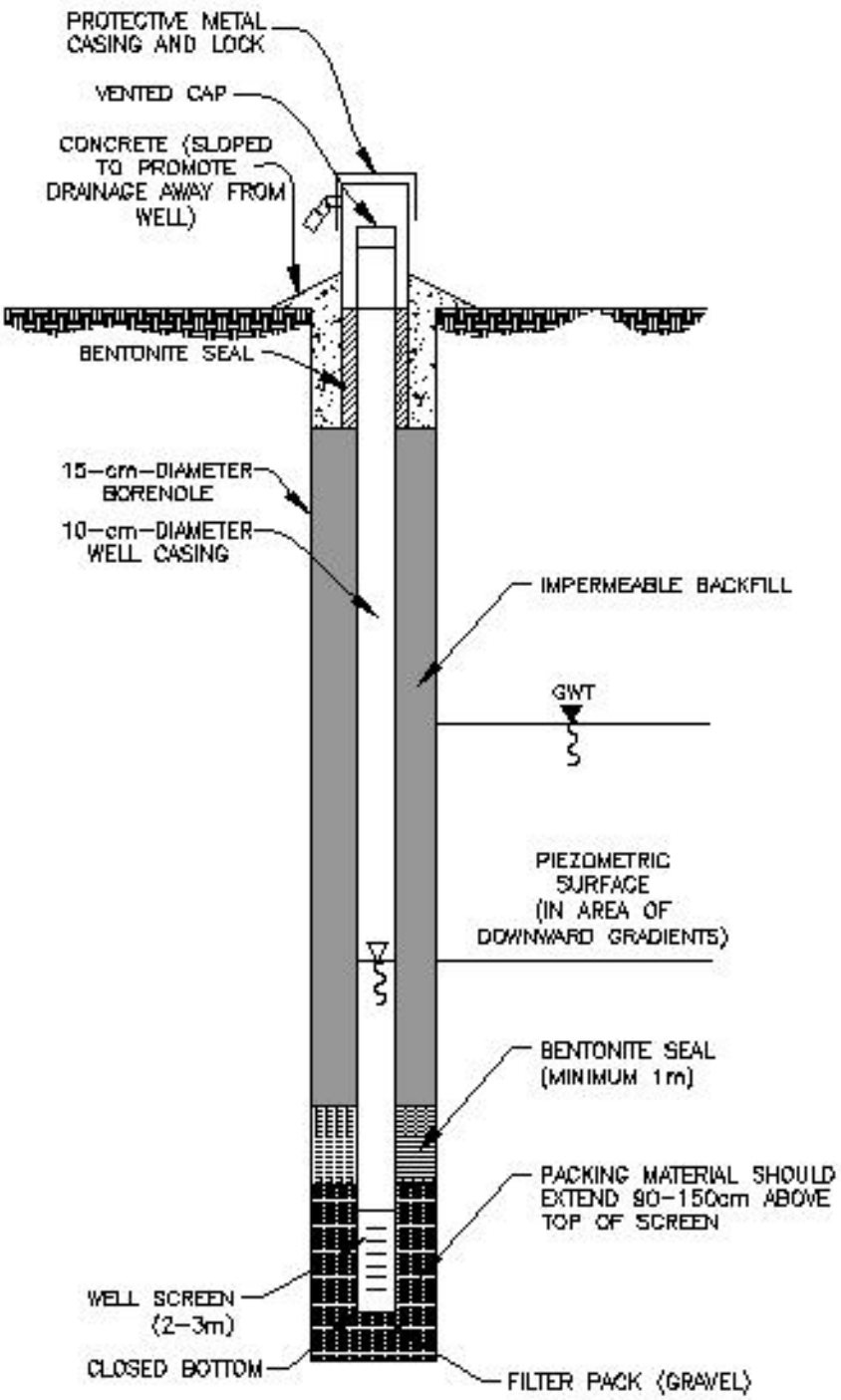

FIG. 5-9 TYPICAL DETAIL OF A MONITORING WELL OR PIEZOMETER

(NOT TO SCALE)

FILE: G:\CLIENTS\E\ENVIROASSOCIATES\EGYPT WASTE TREATMENT\2009 REPORT\FIG 5-9.DWG, DATE: 05/09/2009 10:51:45AM

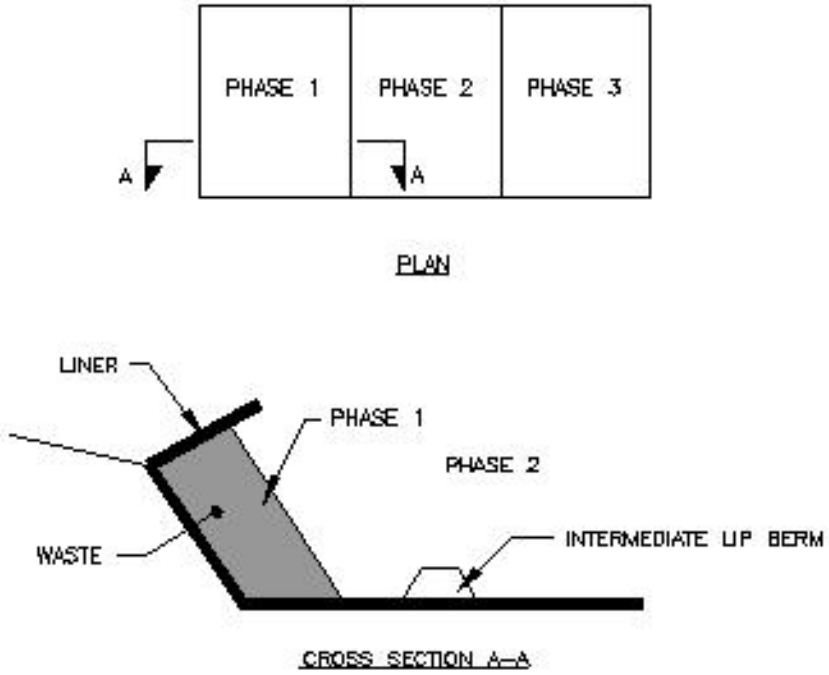

FIG. 5-5 SINGLE STAGE LANDFILL PHASING PLAN

(NOT TO SCALE)

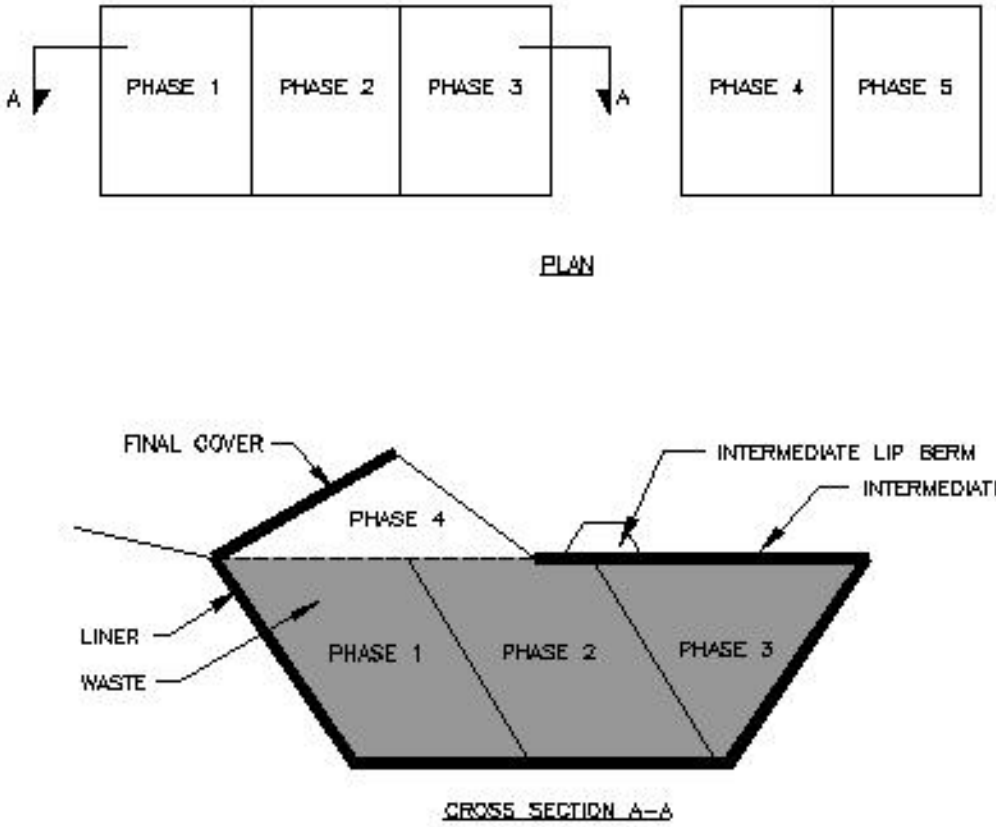

FIG. 5-6 MULTISTAGE PHASING PLAN

(NOT TO SCALE)

FILE: G:\CLIENTS\E\EMIRGASIGATES\EGYPT WASTE TREATMENT\2009 REPORT\FIG 5-5_5-6.DWG, DATE: 09/09/2009 10:49:30AM

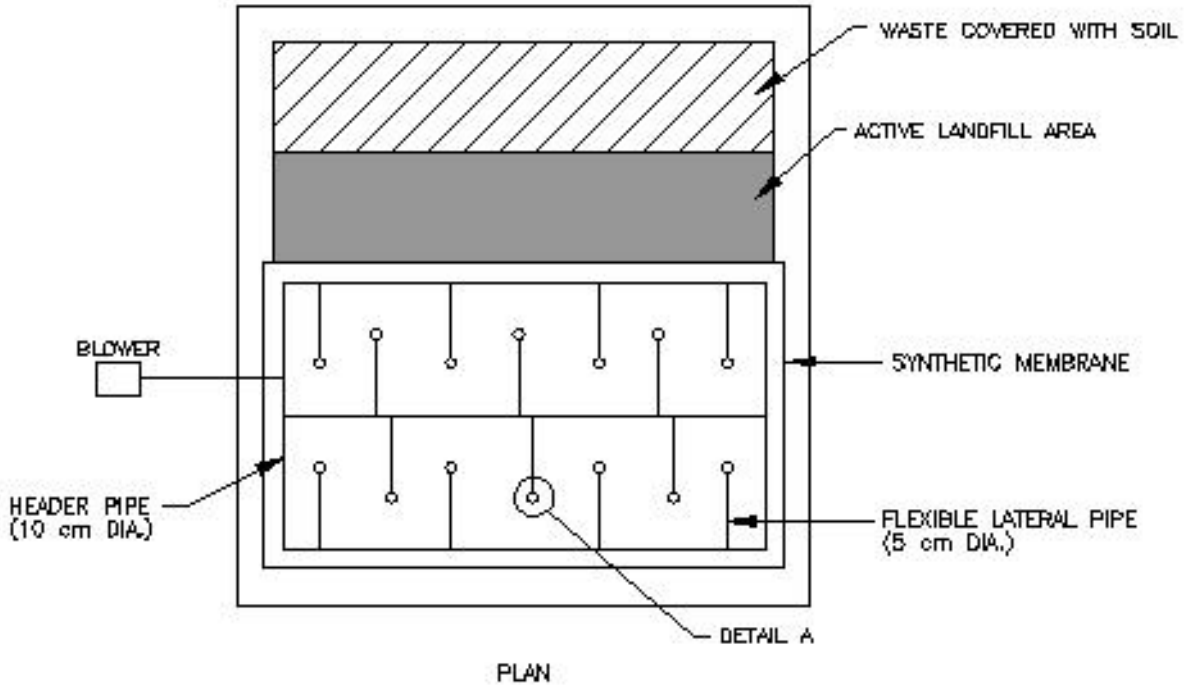

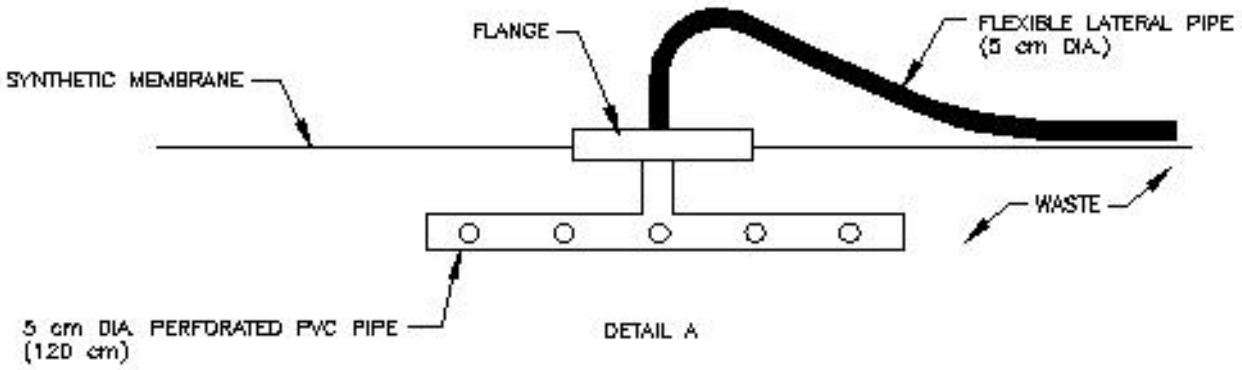

FIG. 5-7 TYPICAL TEMPORARY LANDFILL GAS COLLECTION SYSTEM

(NOT TO SCALE)

FILE: G:\CLIENTS\E\ENVIRONASSOCIATES\EGYPT WASTE TREATMENT\2009 REPORT\FIG 5-7.DWG, DATE: 06/09/2009 10:48:48AM

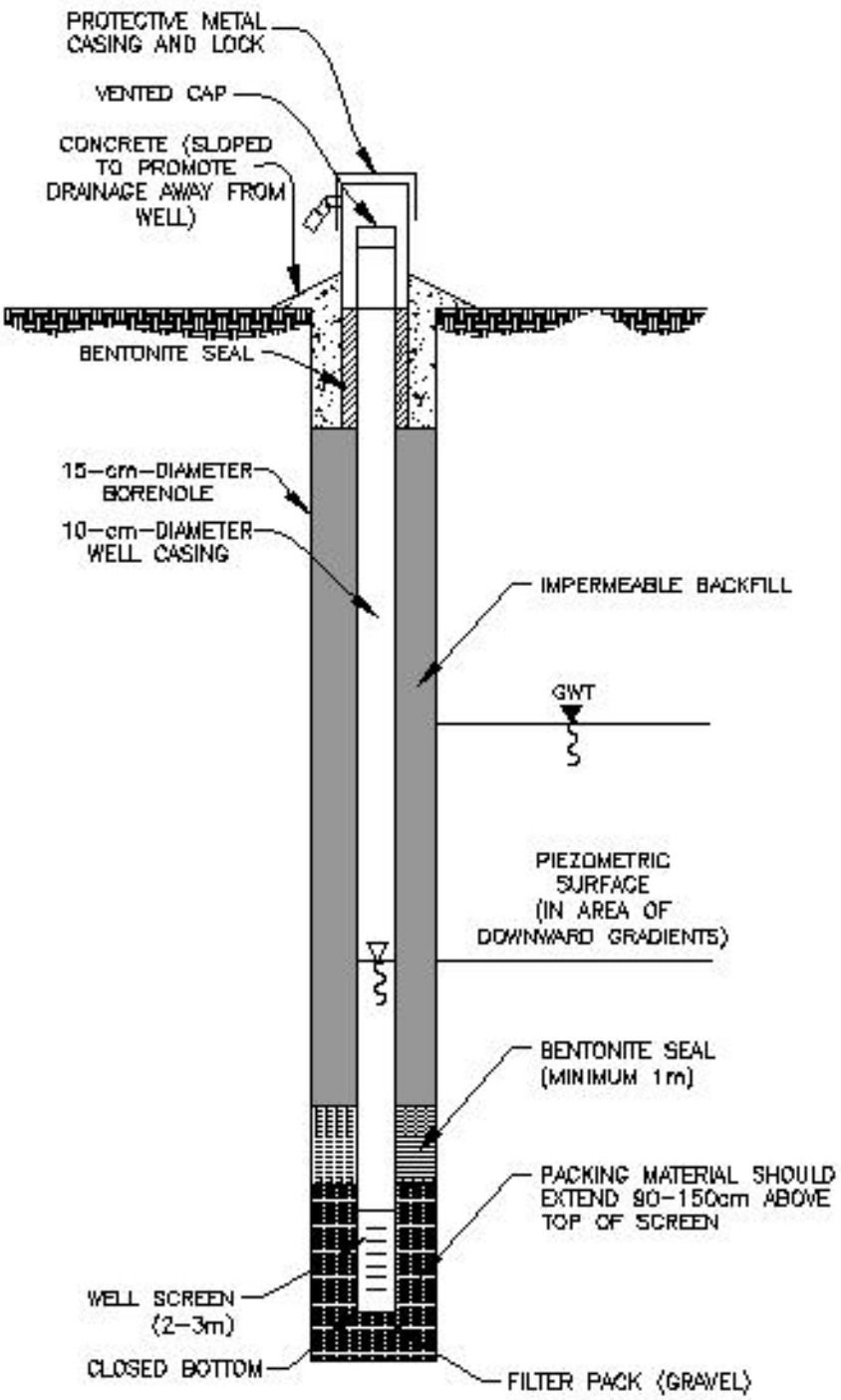

FIG. 5-9 TYPICAL DETAIL OF A MONITORING WELL OR PIEZOMETER

(NOT TO SCALE)

FILE: G:\CLIENTS\E\ENVIROASSOCIATES\EGYPT WASTE TREATMENT\2009 REPORT\FIG 5-9.DWG, DATE: 05/09/2009 10:51:45AM

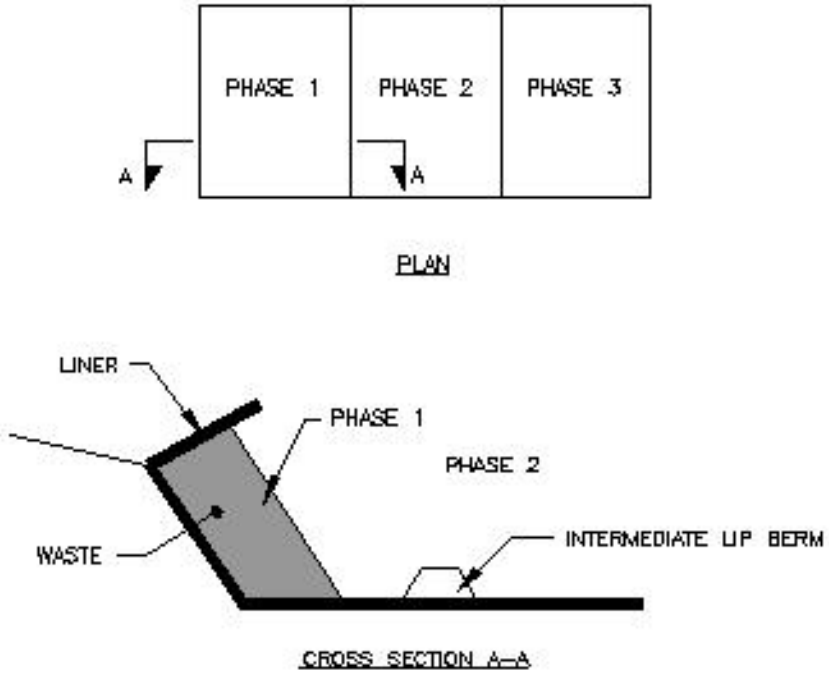

FIG. 5-5 SINGLE STAGE LANDFILL PHASING PLAN

(NOT TO SCALE)

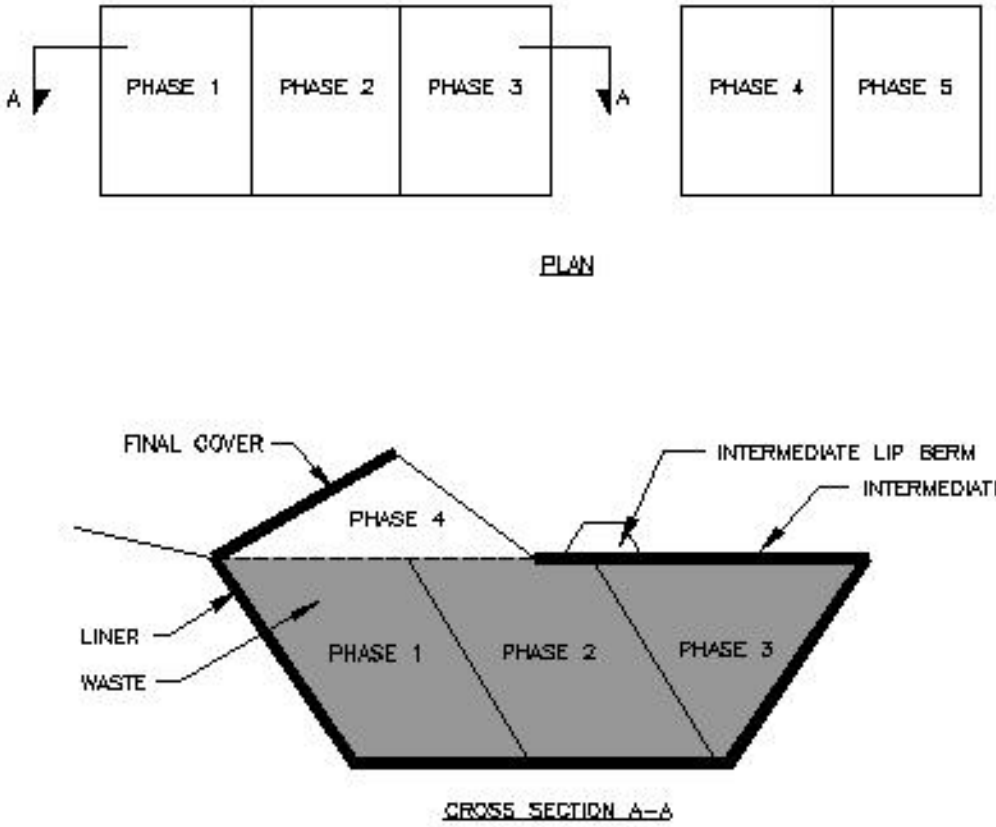

FIG. 5-6 MULTISTAGE PHASING PLAN

(NOT TO SCALE)

FILE: G:\CLIENTS\E\EMIRGASIGATES\EGYPT WASTE TREATMENT\2009 REPORT\FIG 5-5_5-6.DWG, DATE: 09/09/2009 10:49:30AM

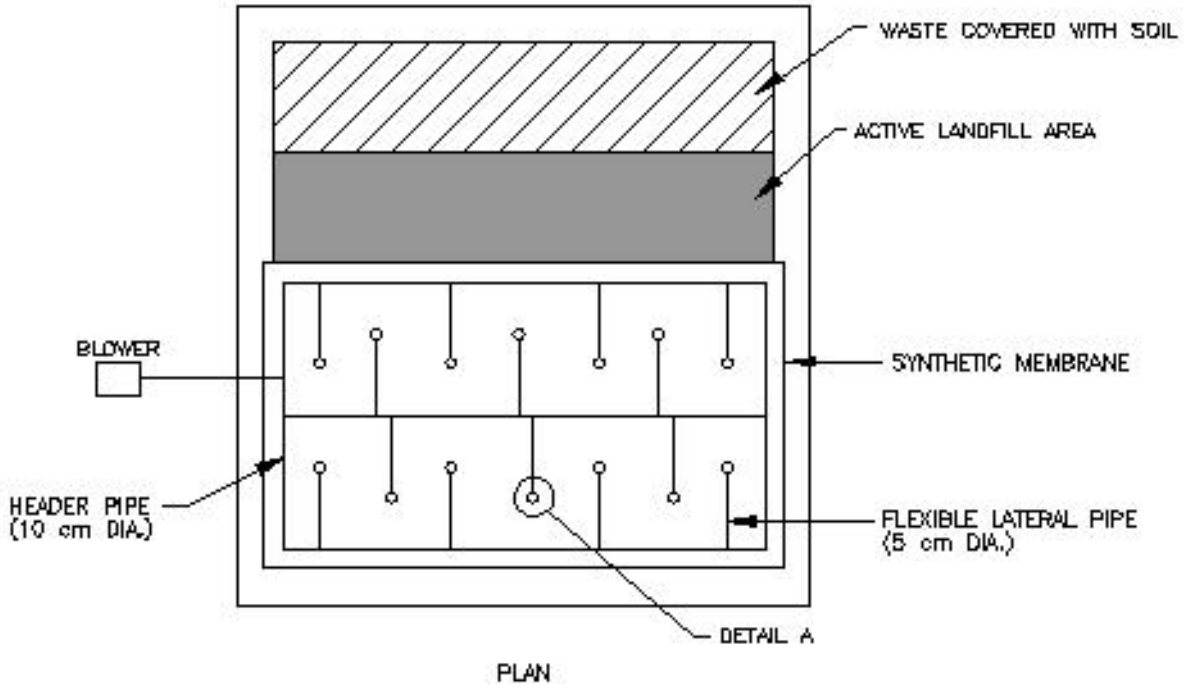

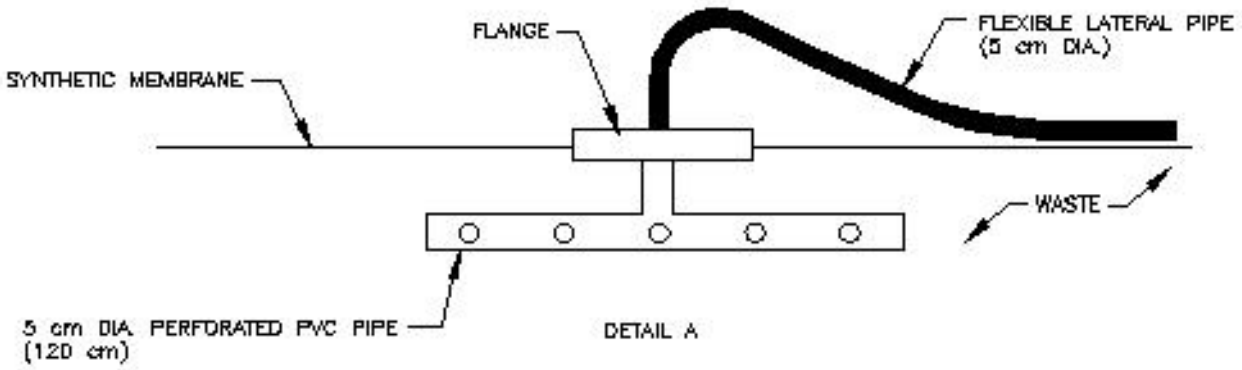

FIG. 5-7 TYPICAL TEMPORARY LANDFILL GAS COLLECTION SYSTEM

(NOT TO SCALE)

FILE: G:\CLIENTS\E\ENVIRONASSOCIATES\EGYPT WASTE TREATMENT\2009 REPORT\FIG 5-7.DWG, DATE: 06/09/2009 10:48:48AM

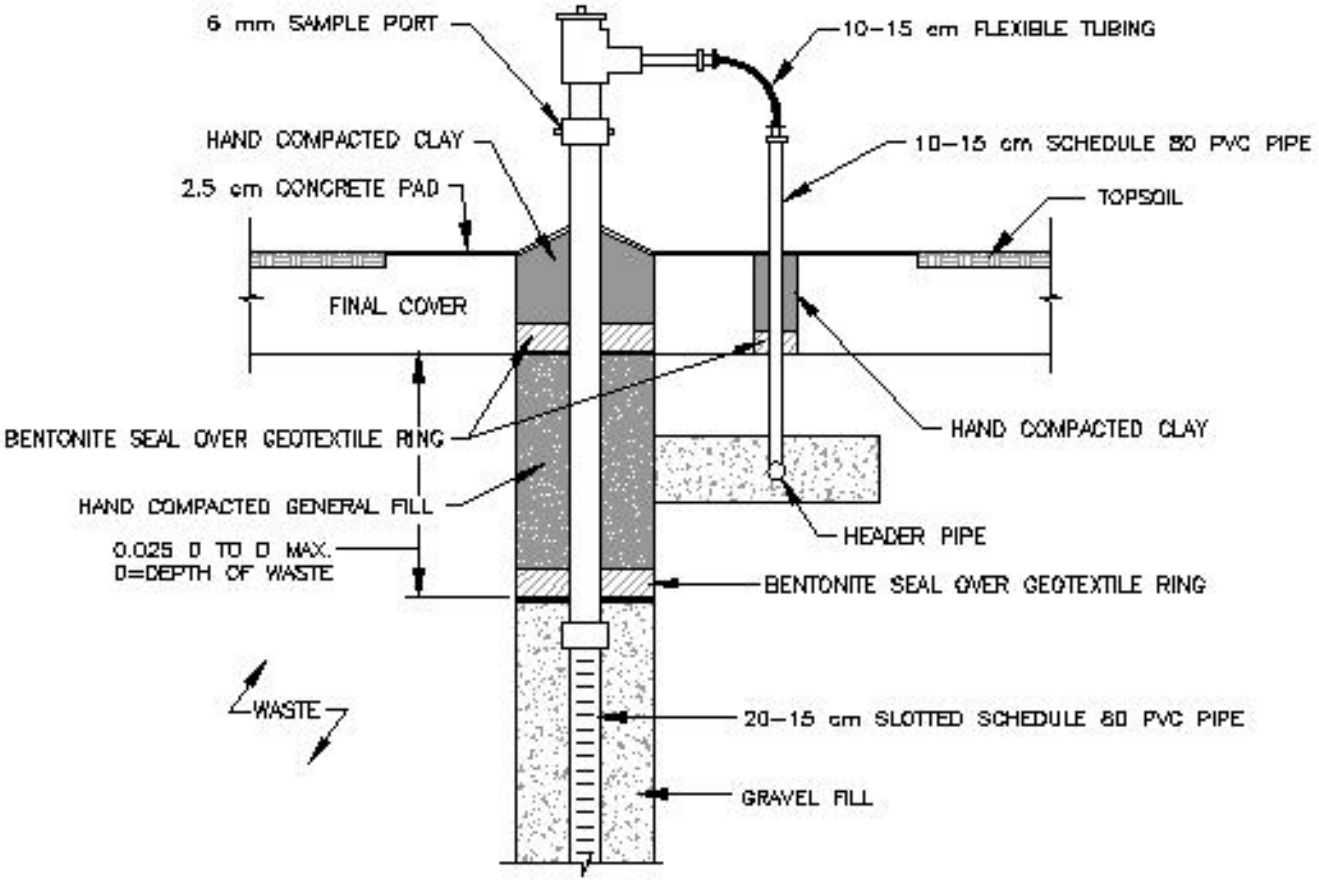

FIG. 5-8 TYPICAL DETAIL OF PERMANENT LANDFILL GAS EXTRACTION WELL

(NOT TO SCALE)

FILE: G:\CLIENTS\E\ENVIROASSOCIATES\EGYPT WASTE TREATMENT\2009 REPORT\FIG 5-8.DWG, DATE: 08/08/2009 10:50:21AM