PUBLIC VERSION

RECEIVED
JUL 22 2010
U.S. TRADE AND DEVELOPMENT AGENCY

JORDAN
2007-21009A vol. 1

Hashemite Kingdom of Jordan

Water Authority of Jordan

4 Public Versions

cc: GJ
JW
JS
DP
MC
PO
CK
SS

سلطة المياه
WATER AUTHORITY

Final Report

For

Wastewater Treatment Feasibility Study in Jordan

March 2009

USTDA
Appropriation No.: 117/81001
Activity No.: 2007-21009A
Reservation No.: 072109055
Grant No.: GH072109055

CH2MHILL

In association with

world-class craft, domestic insight

This report was funded by the U.S. Trade and Development Agency (USTDA), an agency of the U.S. Government. The opinions, findings, conclusions, or recommendations expressed in this document are those of the author(s) and do not necessarily represent the official position or policies of USTDA. USTDA makes no representation about, nor does it accept responsibility for, the accuracy or completeness of the information contained in this report.

Mailing and Delivery Address: 1000 Wilson Boulevard, Suite 1600, Arlington, VA 22209-3901
Phone: 703–875–4357 • **Fax:** 703–875–4009 • **Web site:** www.ustda.gov • **email:** info@ustda.gov

The U.S. Trade and Development Agency

The U.S. Trade and Development Agency (USTDA) advances economic development and U.S. commercial interests in developing and middle income countries. The agency funds various forms of technical assistance, early investment analysis, training, orientation visits and business workshops that support the development of a modern infrastructure and a fair and open trading environment.

USTDA's strategic use of foreign assistance funds to support sound investment policy and decision-making in host countries creates an enabling environment for trade, investment and sustainable economic development. Operating at the nexus of foreign policy and commerce, USTDA is uniquely positioned to work with U.S. firms and host countries in achieving the agency's trade and development goals. In carrying out its mission, USTDA gives emphasis to economic sectors that may benefit from U.S. exports of goods and services.

Mailing and Delivery Address: 1000 Wilson Boulevard, Suite 1600, Arlington, VA 22209-3901
Phone: 703–875–4357 • **Fax:** 703–875–4009 • **Web site:** www.ustda.gov • **email:** info@ustda.gov

Executive Summary

Introduction

The feasibility study for Salt Area Villages, funded by the United States Trade and Development Agency (US TDA) and administered through the Water Authority of Jordan (WAJ) has the objective of providing sewerage services and wastewater treatment to several localities near the historic City of Salt in Jordan. Kickoff Meetings with WAJ May 18-20, 2008 further refined the focus of the study (see Appendix A, Inception Report).

The overall scope of this project consisted of preparing a technical and economic feasibility study for wastewater collection, wastewater treatment and effluent reuse in the project area (shown bellow) that will serve the needs of the communities to the year 2028. The study also assessed any environmental effects of the Project. Financial evaluation of the project provides data on the economic affordability of the project, as well as some key economic indicators for project financing.

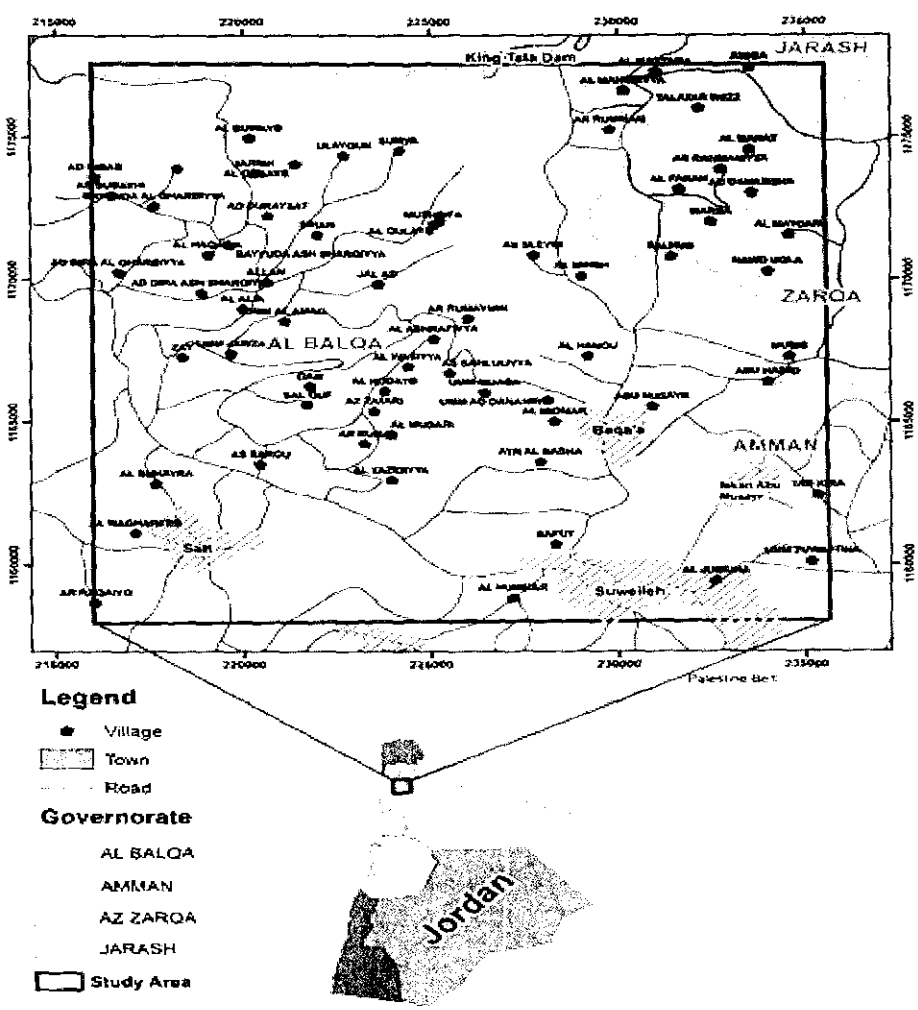

FIGURE ES-1
Wastewater Collection, Wastewater Treatment, and Effluent Reuse in Project Area

Study Area Boundaries

The Study Area covers the villages and communities within the catchments area of wadi Ermameen as shown on Figure ES-2.

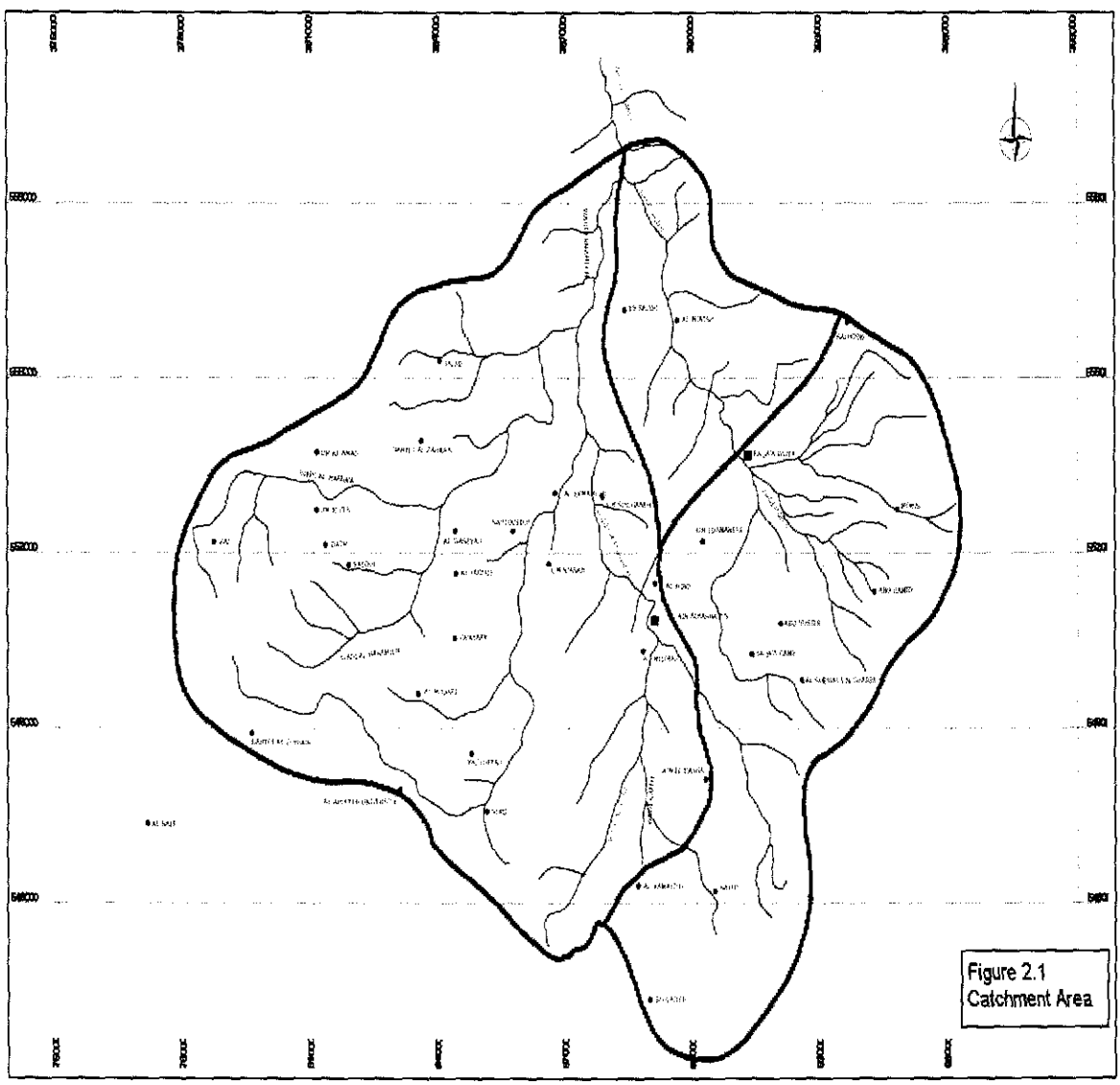

FIGURE ES-2
Villages and Communities within the Catchments Area of Wadi Ermameen

Another key element concerning the study area was determining which communities within the watershed area would be included in the study. The Definitional Mission for this study had listed a number of communities in the Terms of Reference (TOR) section to be considered. However, it was clear upon further study that this was not necessarily an all-inclusive list, and that no other areas within the watershed should be considered – primarily due to the fact that there were communities not listed within the TOR which had a higher population, and could be more readily served, than those communities that were listed in the TOR. Discussions concerning these anomalies were conducted with WAJ to clarify the parameters for the study area. As a result of these discussions, WAJ requested that the project team include all reasonable and feasible communities in the study, and that concepts for providing wastewater facilities be prioritized based in part on the population of the community, and the degree of difficulty associated with providing service to the area.

Existing Situation

There is no existing wastewater collection system to serve the communities east of Salt City in the Balqa'a Governorate of Jordan (project area). There is no central wastewater treatment system for any of the communities in the service area beyond individual cesspits. The population relies on cesspits and septic tanks to dispose of their wastewater and is exposed to major health risks due to leaking tanks, as well as inefficient and costly disposal of the accumulated septage. In addition, leaking septage is recognized to be a significant polluter in an area overlying one of the most important aquifers in Jordan.

Three existing wastewater treatment plants lie within the region: Salt, Fuheis, and Baqa'a. During the conceptualization phase of this study, consultations and site visits conducted with Water Authority of Jordan staff resulted in the conclusion that none of these plants presented a feasible alternative for providing service to the study area. Two of the plants, Salt and Fuheis, were not within close enough proximity to reasonably accept flow from these villages. The third, Baqa'a, was plausible based on general proximity. However, this plant is already over-loaded, and due to site constraints, appreciably expanding and upgrading this plant would present significant challenges that would prove costly to overcome.

In fact, due to the over-loaded conditions associated with the Baqa'a Wastewater Treatment Plant, as well as Water Authority of Jordan (WAJ) adverse opinion of pump stations, it was decided that the Ain Elbasha Pump Station (which currently conveys wastewater flow from West Ain Elbasha to the Baqa'a plant), would be eliminated by constructing a gravity trunk line (which follows a natural wadi) to the study area.

Selected Wastewater Treatment Alternative

During the conceptual phase of the study four (4) wastewater treatment alternatives were evaluated technically and economically. Two sewer conveyance/collection systems options were also considered in the course of the conceptualization: one completely conventional gravity sewer system, with one central wastewater treatment plant was considered and on the other extreme, a series of seven small satellite wastewater treatment plants constructed within the study area were considered. Between these two extremes, two options were considered that focused on overall trunk line reduction and/or overall satellite treatment

plant reduction. Additionally, within these four alternatives, two primary treatment wastewater plant strategies were considered: the first for conventional wastewater treatment, and another for advanced wastewater treatment. The advanced wastewater treatment option was based on membrane bioreactor (MBR) treatment systems. The advanced treatment option provided several advantages over conventional treatment alternatives, such as: much smaller footprint, higher levels of automation, ready availability as pre-manufactured package systems, and very high quality of treatment. However, the conventional treatment option offered two primary advantages that were important to the overall evaluation: 1) it is less costly, and 2) it can meet regulatory permit limits. Alternative 1A (centralized treatment plant with conventional treatment option was the overall highest scoring alternative when both economic and non-economic factors were considered and was selected as the preferred alternative. The scoring criteria and weights used for this assessment were developed from discussions with WAJ.

Serviced Population, Wastewater Flows and Pollution Loads

The existing Study Area population was determined from the 2004 Census data. Population forecasts for the Study Area for the 20 year planning period to 2028 were based on this 2004 census data and the study of trends in population growth. Calculation of future population estimates have been carried out using declining growth obtained from the Department of Statistics (DOS), which is applicable to whole Balqa Governorate.

The **projected influent flows** have been calculated based on the projected population growth estimates, per capita water consumption rate and the percentage of wastewater production as it relates to overall water consumption for the study area. Discussions were held with WAJ regarding the overall projected wastewater generation rate, as it related to historical rates compared to projected rates. For the design year 2028, it was agreed that the adjusted per capita wastewater generation rate will be 115 L/c/d.

Existing service area populations and daily flow conditions (2008) and projected service area populations and daily flow conditions for 2028, and 2035 are also shown. Values shown in the following table were used during preliminary modeling and equipment sizing activities for the proposed wastewater treatment facility associated with the selected alternative as presented in more details further in this report.

Average daily flow are used to model and design the main biological treatment units, while maximum day conditions serve to design aeration and sludge processing systems.

TABLE ES-1
Total Projected 2028 Wastewater Flow and Contaminant Loadings for the Selected Alternative

	Average Day Design		Maximum Month Design	
Parameter	(m^3/day, kg/day)	(gpd, lbs/day)	(m^3/day, kg/day)	(gpd, lbs/day)
Flow	6,619	1,749,000	9,267	2,448,600
COD	8,741	19,254	12,238	26,956
BOD	5,298	11,669	7,417	16,337
TSS	5,960	13,128	8,344	18,379
TKN	993	2,188	1,391	3,063
NH_3	596	1,313	834	1,838
TP	166	365	232	511

Effluent Standards

It is anticipated that treated wastewater will be discharged to the King Talal Reservoir, which is considered a beneficial reuse given the fact that the water supply from this dam is used to provide irrigational water to the Jordan River Valley. As such the effluent limitations are less stringent. They are summarized in the following table.

TABLE ES-2
Allowable Limits for Treated Wastewater Discharged into Streams, Valleys or Lakes

Standards	Allowable concentration
Biochemical Oxygen Demand (BOD_5) (mg/L)	60
Chemical Oxygen Demand (COD) (mg/L)	150
Dissolved Oxygen (DO) (mg/L)	<1
Total Suspended Solids (mg/L)	60
pH (unit)	6-9
Nitrate-Nitrogen (NO_3) (mg/L)	80
Total Nitrogen (TN) (mg/L)	70
E. coli MPN or CFU / 100ml	1000
Intestinal Helminth Eggs (egg/L)	> or =1
Oil & Grease Content (FOG) (mg/L)	8

Wastewater Treatment Plant Site Selection

Several potential sites were selected, visited and evaluated for WWTP location. Figure ES-3 shows the location of the selected site in comparison with study area municipalities and the existing wastewater treatment plants.

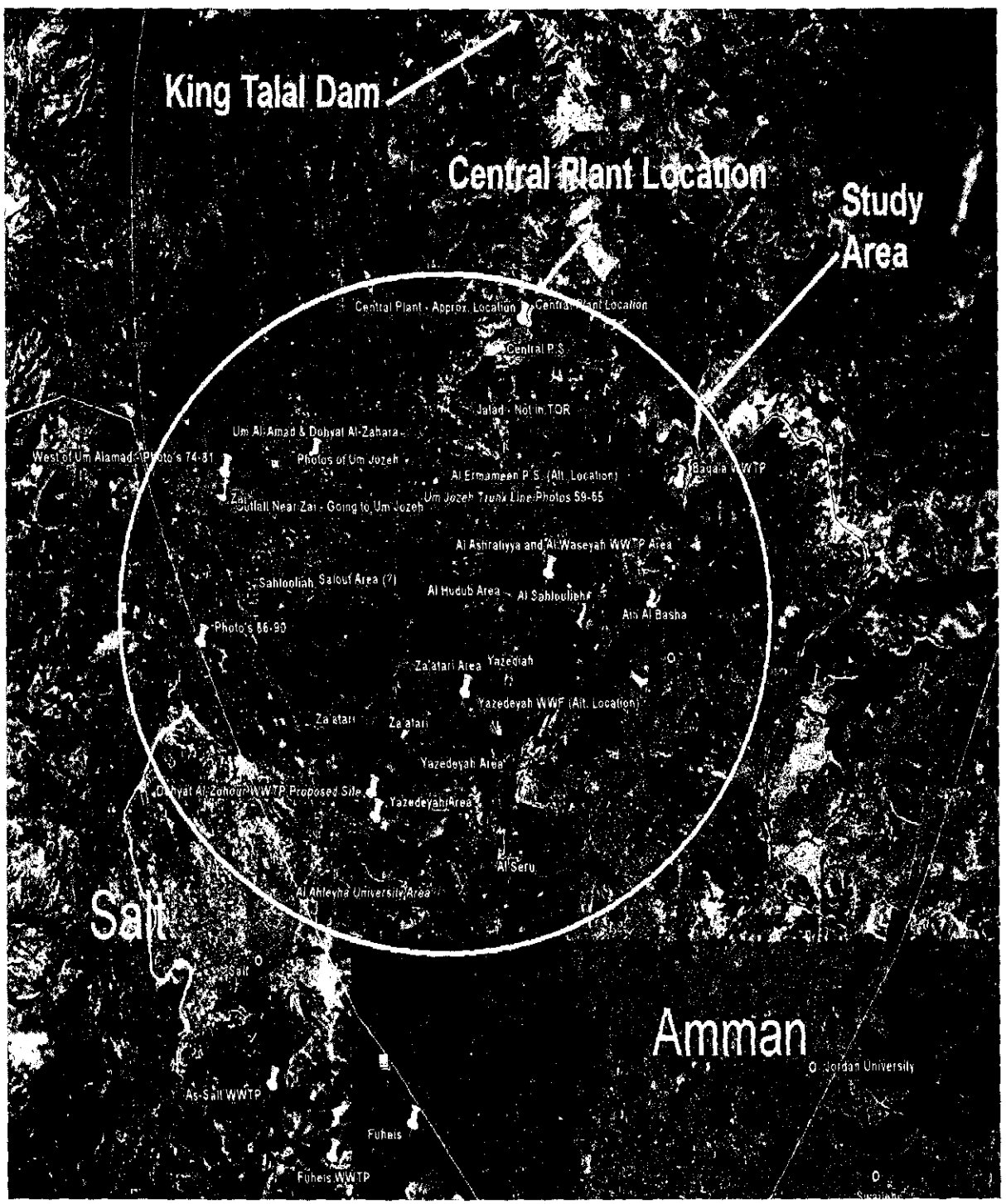

FIGURE ES-3
Location of Selected Site in Comparision with Study Area Municipalities and the Existing Wastewater Treatment Plants

Proposed Wastewater Collection/Conveyance System

The routing of the sewer lines have been selected to follow, as far as possible, the natural Wadi-courses, and the selected site for the treatment plant is located such that all communities will be served by gravity flow. In the preferred alternative Ain El-Basha pumping station is abandoned and gravity trunk line along Wadi Um Eddananeer will carry the wastewater flow down stream to the central pumping station.

Approximately 210,000 meters of sewer network (45,000 meters of 150 mm and 165,000 meters of 200 mm) is required to service all communities in the serviced area. In addition about 18,000 meters of 300 mm, 5,500 meters of 500 mm, and 7,000 meters of 600 mm of trunk lines are required to convey the collected wastewater to the central plant

Proposed Wastewater Treatment System

The proposed wastewater treatment plant, shown schematically in the process flow diagram below, will include the following unit processes:

- Clarification
- Disinfection
- Waste Activated Sludge (WAS) Thickening
- Aerobic Digestion
- Dewatering
- Influent pumping
- Screening
- Grit Removal
- Biological Treatment (Modified Ludzack-Ettinger Process, a compact BNR process)

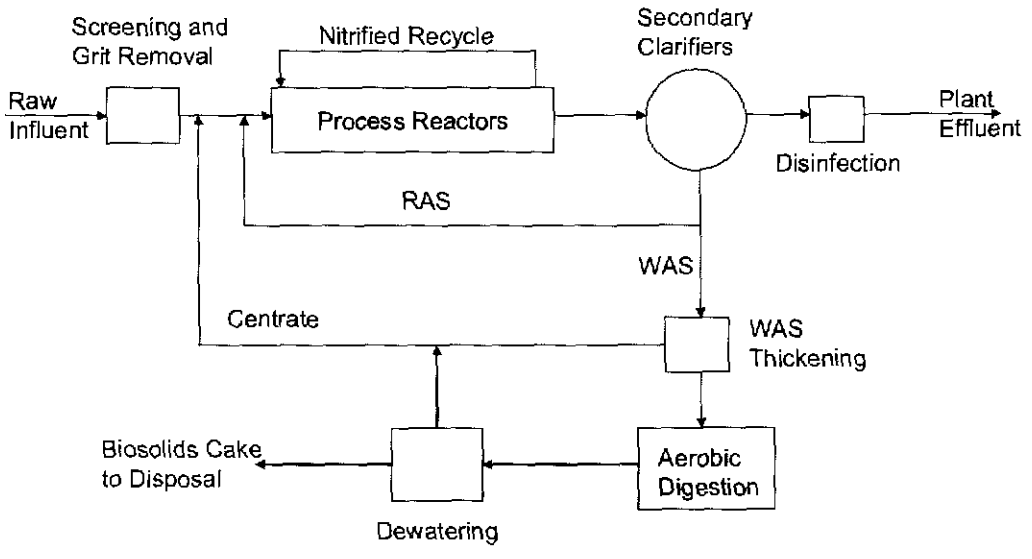

The general site layout of the proposed Central WWTP based on equipment sizing estimates performed during the preliminary engineering design is shown below.

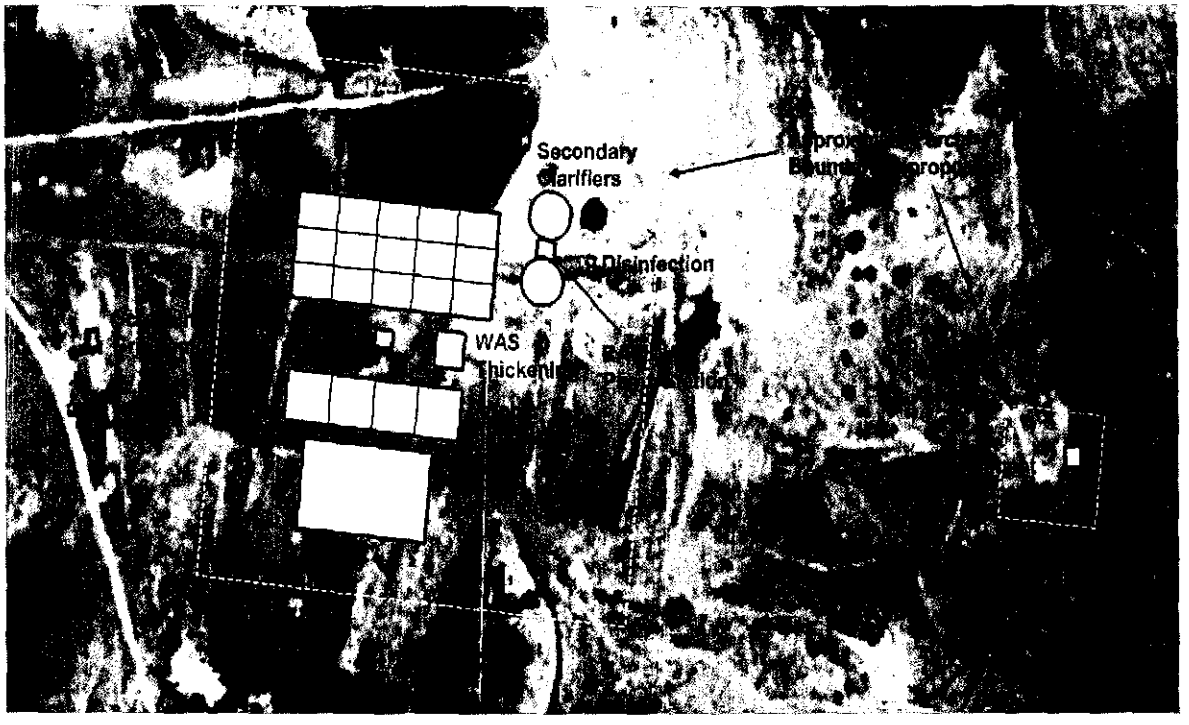

Effluent Reuse

Due to the topographic nature of the project catchment, which is mainly mountainous with narrow wadi bed, it is difficult to find enough area around the WWTP site that can consume the whole quantities of effluent water for crop production. Furthermore, no need for irrigation during most of the winter season because the crop water demand is less than the effective rainfall in that region.

The central wastewater treatment plant, serving all villages in the area is located downstream of the study catchment and about 5 km upstream of King Talal Dam. It was determined that the best way of water reuse for this WWTP is to link it with the reuse scheme of King Talal dam by discharging the effluent water to the Dam via a water conveyance pipe. Such closed outfall would prevent any contamination to the fresh water currently running in the Wadi. It is worth mentioning here that the source of water in this dam is mainly effluent water from other treatment plants like Al-Samra WWTP and Baqa' WWTP in addition to annual flood water. All the water collected in this dam is currently used for agriculture production in the Jordan valley.

Environmental Assessment

The feasibility study included preparing a Preliminary Environmental Assessment (Preliminary EA) to address the environmental impacts that are likely to be generated from the construction and operation of the project.

It was deemed that consultations with the public at this stage would not be necessary for the purpose of preparing the Preliminary EA. Nonetheless, consultations, discussions and meetings with the key stakeholders, mainly governmental departments, were conducted by

the study team which provided useful input that guided the preliminary environmental assessment process. These included Water Authority of Jordan, Ministry of Water and Irrigation, Ministry of Environment, Department of Antiquities and others.

The overall net impact of the project on the environment in the area will be positive. Almost all the adverse environmental impacts will occur during the construction phase and will be reversible, short-term and can be easily mitigated through good construction practices. Less impacts, both in severity and spatial extent are expected when the collection, treatment and reuse system is completed and operational.

The mitigation measures proposed and presented in the Preliminary EA for the construction phase address all likely construction activities. Their proper and timely implementation will ensure that all residual adverse impacts are minimized.

The proposed wastewater collection, treatment and reuse project for the target villages and communities in Salt is expected to have few and limited adverse environmental impacts during the operational phase. These impacts may be generated from the normal operation and maintenance activities at the WWTP; incidents at WWTP involving leaks, spills and overflows; treated effluent reuse activities; and from the regular maintenance of the pump stations and collection sewers.

Mitigation measures proposed include odor minimization in the WWTP design, conservative design with high operational flexibility, management of disease vectors and pest control and applying standard health and safety procedures. Groundwater monitoring will help protect the water resources in the immediate vicinity of the Central WWTP. This and other mitigation measures will also assure rapid remediation of any adverse effects on the water resources from WWTP operation.

Costs and Affordability

A two stage approach was suggested by WAJ, based on the capital costs of the sewer network construction costs in the each study area village. This implementation schedule could be revised in the next phase of the project, especially if WAJ decides to explore further and in more details the Baqa'a camp wastewater diversion and treatment as part of Stage 1 of the project.

The investment cost for both implementation stages, showing the foreign and local costs, assuming 85 percent foreign financing of the project are summarized in the following table.

TABLE ES-3
Summary of Estimated Capital Costs for the Selected Alternative

Cost Component	Local Cost in JOD	Foreign Cost in JOD	Total Cost in JOD
Capital Costs			
Trunk Lines	1,516,950	8,596,050	10,113,000
Laterals	3,450,000	19,550,000	23,000,000
House connections	450,000	2,550,000	3,000,000
Influent Pumping Station	124,000	702,000	826,000
Central WWTP	1,200,000	7,800,000	8,000,000
Treated Effluent Pipe	145,000	830,000	975,000
Engineering Services (Sewer Network)	1,805,500	1,805,500	3,611,000
Engineering Services(WWTP & Pumping & Effluent)	490,000	490,000	980,000
WAJ Administration Costs (WWTP)	250,000	250,000	500,000
Land Acquisition	1,500,000	0	1,500,000
Total Capital Costs	10,931,450	41,573,550	52,505,000

Operation and maintenance (O&M) cost estimates, training requirements for O&M personnel, and sampling, testing, and monitoring requirements were developed for the proposed Central WWTP and are also shown below.

TABLE ES-4
Summary of Annual Operation and Maintenance Costs for the Selected Alternative

Cost Component	Costs in JD/year
Power	284,000 JD
Consumables and Supplies	119,000 JD
Civil, Mechanical & Electrical Maintenance	145,000 JD
Labor	82,000 JD
Sludge Disposal	31,000
Total	661,000 JD
Unit Cost	0.274 JD/cubic meter of treated wastewater

To assess further the ability of the population in the area to pay for added wastewater collection/treatment services, we examined the Balqa households annual spending on water and wastewater services. We found that each household spent an average of 56.4 JOD on water and sanitation, while the Jordanian average spending for the same services is 72.2 JOD.

This water and sanitation expenditure portion is 3.4 percent of the average total annual household expenditures for the Balqa Governorate. In comparison, the national average spent on water and sanitation is 3.6 percent of the total expenditures on commodities and services.

The World Bank determines affordability where up to 3 to 5 percent of disposable income is for the provision of water and sanitation services.

For a household size of about 6 (current average size is 5.74), the additional tariff adjustment required to cover this project financing would be 145 JOD per household (for approximately 11,000 households in 2028) for capital recovery at 5 percent, and 170 JOD at capital recovery of 8 percent. This expenditure is equivalent to 8.0 percent (5% capital recovery) or 9.4 percent (at 8% capital recovery) per annum for the lowest income category of 1,800 JOD, which, in many cases, receives Government subsidies for water and sanitation. Based on the next lowest level household income in the area (2,400 JOD), the annual expenditures on water and sanitation tariffs appear to be somewhere between 6.0 and 7.0 percent, which seems unaffordable in comparison with the World Bank range of 3 to 5 percent.

Adding Baqa'a camp wastewater to the project would improve significantly the affordability of the project. Capital recovery costs and affordability have been calculated also for additional alternatives presented in Appendix B (addition of Baqa'a camp wastewater to the study area) and Appendix C (diversion of the entire Baqa'a WWTP flow to the proposed Central WWTP).These costs vary from 71 JOD per household when Baqa'a camp is added, to 52 JOD when the entire Baqa'a WWTP is diverted to the central treatment plant (calculated at 5 percent capital recovery).

Baqa'a Camp Wastewater Treatment Plant Improvements

By eliminating the Ain Elbasha Pump Station a reduction in the flows to Baqa'a wastewater treatment plant of approximately 10 percent can be expected, while re-direction of the entire Baqa'a camp wastewater would reduce the flows to Baqa'a WWTP by approximately 40 percent.

Based on site visits, accompanied with WAJ staff, study of topographic maps and difference level measurements, Baqa'a Camp wastewater could be diverted to the proposed Central WWTP by gravity pipe lines: 1,600 meters of 700 mm pipe diameter, and another 6,710 meters of 800 mm diameter. The total construction cost of both sections would be 2.80 million JD.

The Transfer of entire Baqa'a WWTP flow to the new central WWTP can be achieved through a larger gravity pipe line: 7,710 meters of 1000 mm diameter, and 600 meters of 1200 mm diameter. The total construction cost of both sections would be 4.2 million JD.

For the transfer of the total Baqa'a WWTP flow to the central WWTP, a small pumping station should built in the same site of the existing Baqa'a WWTP with transmission pipe line to the nearest manhole located on the new gravity trunk line mentioned above.

The addition of Baqa'a camp flows to Stage 1 of the project would improve significantly the overloading conditions at Baqa'a WWTP. The capital cost of such alternative is

approximately 25,000,000 JD, including engineering, project management, and contingencies.

The total closure of Baqa'a WWTP would require a capital investment of approximately 50,000,000 JD, including engineering, project management, and contingencies.

Recommendations

We recommend that a more detailed Preliminary Engineering study be executed for the identified Baqa'a alternatives. The results of this additional study would be summarized in a Preliminary Engineering Report (PER), executed independently of this feasibility study, providing more detailed technical and economical information to WAJ. The Water Authority of Jordan will thus have more detailed document to approach potential donors for funding of a project, which in our opinion, has higher degree of affordability for the local citizens. USAID or US TDA could be approached for financial support of such additional study of Baqa'a WWTP load reductions alternatives. We summarized in the following table the design parameters for the current feasibility study with the two identified alternatives for reduction of Baqa'a Wastewater Treatment Plant flows and loads.

TABLE ES-5
Design Criteria for Current Feasibility Study and Baqa'a Alternatives

Description	Study Area (2028)	Study Area (2035)	Study Area + Baqa'a Camp (2028)	Study Area + Baqa'a WWTP (2028)
Total Population	63,632	70,639	158,533	309,269
Serviced Population	57,269	63,575	142,680	278,269
Average treated flows	6,620	7,308	16,400	32,000
Collection network				
150 mm	42,280 m	42,280 m	42,280 m	42,280 m
200 mm	165,300 m	165,300 m	165,300 m	165,300 m
Trunk Lines (total length)	36,574 m	35,574 m	38,175 m	38,275 m
300 mm	18,415 m	18,415 m	18,415 m	18,415 m
400 mm	5,352 m	5,352 m	5,352 m	5,352 m
500 mm	6,098 m	6,098 m	6,098 m	6,098 m
600 mm	6,709 m	6,709 m	0	0
700 mm	0	0	1,600 m	0
800 mm	0	0	6,710 m	0
1,000 mm	0	0	0 m	7,710 m
1,200 mm	0	0	0 m	600 m
WWTP Influent lift station	Yes	Yes	Yes	Yes
Effluent Line to King Talal Reservoir	2,500 m of 600 mm line	2,500 m of 600 mm line	2,500 m of 1,000 mm line	2,500 m of 1,200 mm line

TABLE ES-5
Design Criteria for Current Feasibility Study and Baqa'a Alternatives

Description	Study Area (2028)	Study Area (2035)	Study Area + Baqa'a Camp (2028)	Study Area + Baqa'a WWTP (2028)
Reduction of Baqa'a WWTP flows	13%	13%	43%	100%
Capital Costs				
Sewer Laterals	23,000,000 JD	23,000,000 JD	23,000,000 JD	23,000,000 JD
House Connections	3,000,000 JD	3,000,000 JD	3,000,000 JD	3,000,000 JD
Trunk Lines	10,000,000 JD	10,000,000 JD	10,500,000 JD	11,500,000 JD
Treated Effluent Line	975,000 JD	975,000 JD		
Influent Pump Station	826,000 JD			
Wastewater Treatment Plant	8,000,000 JD	9,000,000 JD	21,000,000 JD	41,000,000 JD
Land Acquisition for WWTP	1,500,000 JD	1,500,000 JD	1,500,000 JD	1,500,000 JD
Engineering & Management Costs	4,591,000 JD	4,759,000 JD	5,900,000 JD	8,000,000 JD
WAJ Administrative Costs	500,000 JD	500,000 JD		
Total Capital Costs	52,505,000 JD	52,847,000JD	64,900,000 JD	88,000,000 JD
WWTP O & M Costs	661,000 JD	680,000 JD	800,000 JD	1,200,000 JD
Net Present Value at 5% Discount Rate	60,743,000 JD	61,321,000 JD	74,870,000 JD	102,955,000 JD
Net Present Value at 8% Discount Rate	58,995,000 JD	59,523,000 JD	72,755,000 JD	99,782,000 JD
Estimated Number of Households (2028)	10,605		26,422	51,545
Estimated Number of Households (2035)		11,728		
Annual Expenditure at 5% interest rate	145 JOD/home	146 JOD/home	71 JOD/home	52 JOD/home
Internal Rate of Return	1.83%	2.00%	2.53%	2.84%

At the request of the Water Authority of Jordan we prepared an additional table showing the estimated costs for Baqa'a plant and camp together with 2035 population of the study area. The costs for the treatment facilities are only an order of magnitude, because they were estimated using unit flows and costs from Table ES-5. Baqa'a camp and WWTP specifics were not part of this study. Those facilities need additional evaluation taking into account existing and future conditions (demographics, age of existing equipment, operational costs of the facilities, etc.).

TABLE ES-6
Design Criteria for Current Feasibility Study and Baqa'a Alternatives

Description	Study Area (2028)	Study Area (2035)	Study Area + Baqa'a Camp (2035)	Study Area + Baqa'a WWTP (2035)
Total Population	63,632	70,639	165,540	316,276
Serviced Population	57,269	63,575	148,990	284,648
Average treated flows	6,620	7,308	17,135	32,725
Collection network				
150 mm	42,280 m	42,280 m	42,280 m	42,280 m
200 mm	165,300 m	165,300 m	165,300 m	165,300 m
Trunk Lines (total length)	36,574 m	35,574 m	38,175 m	38,275 m
300 mm	18,415 m	18,415 m	18,415 m	18,415 m
400 mm	5,352 m	5,352 m	5,352 m	5,352 m
500 mm	6,098 m	6,098 m	6,098 m	6,098 m
600 mm	6,709 m	6,709 m	0	0
700 mm	0	0	1,600 m	0
800 mm	0	0	6,710 m	0
1,000 mm	0	0	0 m	7,710 m
1,200 mm	0	0	0 m	600 m
WWTP influent lift station	Yes	Yes	Yes	Yes
Effluent Line to King Talal Reservoir	2,500 m of 600 mm line	2,500 m of 600 mm line	2,500 m of 1,000 mm line	2,500 m of 1,200 mm line
Reduction of Baqa'a WWTP flows	13%	13%	43%	100%
Capital Costs				
Sewer Laterals	23,000,000 JD	23,000,000 JD	23,000,000 JD	23,000,000 JD
House Connections	3,000,000 JD	3,000,000 JD	3,000,000 JD	3,000,000 JD
Trunk Lines	10,000,000 JD	10,000,000 JD	10,500,000 JD	11,500,000 JD
Treated Effluent Line	975,000 JD	975,000 JD	975,000 JD	975,000 JD
Influent Pump Station	826,000 JD	826,000 JD	826,000 JD	826,000 JD
Wastewater Treatment Plant	8,000,000 JD	9,000,000 JD	21,932,800 JD	41,888,000 JD
Land Acquisition for WWTP	1,500,000 JD	1,500,000 JD	1,500,000 JD	1,500,000 JD
Engineering & Management Costs	4,591,000 JD	4,759,000 JD	6,160,000 JD	8,376,000 JD
WAJ Administrative Costs	500,000 JD	500,000 JD	500,000 JD	500,000 JD
Total Capital Costs	52,505,000 JD	52,847,000JD	66,093,000 JD	89,264,000 JD

TABLE ES-6
Design Criteria for Current Feasibility Study and Baqa'a Alternatives

Description	Study Area (2028)	Study Area (2035)	Study Area + Baqa'a Camp (2035)	Study Area + Baqa'a WWTP (2035)
WWTP O & M Costs	661,000 JD	680,000 JD	835,850 JD	1,230,300 JD
Estimated Number of Households (2028)	10,605			
Estimated Number of Households (2035)		11,728	27,545	52,668

Contents

1.0 Introduction 1-1
1.1 Background 1-1
1.2 Project Scope 1-2
1.3 Summary of Conceptual Report 1-2
1.4 Wastewater Treatment Plant Site Selection 1-5
1.5 Recommendation 1-5
2.0 General Design Factors 2-1
2.1 Climate 2-3
2.2 Current Population 2-4
2.3 Future Population 2-6
2.3.1 Population Growth Rates 2-6
2.3.2 Population Projections 2-7
2.4 Effluent Standards 2-9
3.0 Review of Existing Collection and Treatment Systems 3-1
4.0 Design Wastewater Flows and Waste Characteristics 4-1
4.1 Wastewater Flow Projections 4-1
5.0 Conveyance/Collection System 5-1
5.1 General 5-1
5.1.1 Localities Currently Connected to Baqa'a WWTP 5-1
5.2 Preferred Alternative for Wastewater Collection Network 5-2
5.2.1 Location of Wastewater Treatment Plant and Pumping Station 5-2
5.2.2 Wastewater Collection Network 5-2
5.3 Wastewater Trunk Lines 5-3
5.3.1 Treated Effluent Pipeline 5-4
6.0 Preliminary Engineering Design of the Selected Alternative (Central WWTP) 6-1
6.1 Overall Process Flow Diagram and Site Plan 6-1
6.2 Basic Design Parameters and Equipment Description 6-2
6.3 Influent Pumping 6-3
6.4 Headworks 6-3
6.5 Biological Treatment 6-4
6.6 Secondary Clarification 6-6
6.7 Disinfection 6-7
6.8 Sludge Treatment and Disposal 6-7
7.0 Operational Aspects 7-1
7.1 O&M Cost Estimate 7-1
7.2 Training Requirements for O&M Personnel 7-2
7.2.1 Sampling, Testing, and Monitoring Requirements 7-3
8.0 Environmental Assessment 8-1
8.1 Introduction 8-1
8.2 Approach and Methodology 8-1

8.3 Study Area 8-2
8.4 Proposed Project 8-4
8.5 Existing Conditions and Need for the Project 8-4
8.5.1 Existing Situation 8-4
8.5.2 Need for the Project 8-4
8.6 Project Alternatives 8-4
8.6.1 Service Area Alternatives 8-4
8.7 Environmental Impacts 8-6
8.7.1 Positive Impacts 8-6
8.7.2 Impacts during the Construction Phase 8-6
8.7.3 Impacts During the Operating Phase 8-7
8.8 Environmental Management and Monitoring 8-8
9.0 Water Reuse Opportunities 9-1
9.1 Characteristics of the Study Area 9-1
9.1.1 Climate 9-1
9.1.2 Current Agricultural Practices 9-1
9.1.3 Source of Irrigation Water 9-4
9.2 Irrigation Water Demand 9-4
9.2.1 The Reference Crop Evapotranspiration (ETo) 9-4
9.2.2 The Net Water Requirement for a Certain Crop 9-5
9.3 Effluent Water Balance 9-6
9.4 Recommended Reuse Option 9-8
10.0 Project Costs 10-1
10.1 Wastewater Treatment Facility Construction Cost Estimate 10-1
10.2 Net Present Value Analysis 10-2
10.3 Cost Estimate of Wastewater Collection System 10-2
10.4 Influent Central Pumping Station 10-8
10.5 Treated Effluent Pipeline 10-8
11.0 Project Implementation and Staging 11-1
11.1 Recommended Contract Strategy 11-1
11.1.1 Potential Financing Sources 11-1
11.1.2 US Sources of Supply 11-1
12.0 Economic, Financial, and Socioeconomic Analysis of the Project 12-1
12.1 Project Costs 12-1
12.2 Revenue Estimates 12-3
12.3 Socioeconomic Impact Assessment 12-4
12.4 Capital Recovery Costs 12-6
12.5 Developmental Impact Assessment 12-2

Figures

1-1 Map of Jordan

1-2 Treatment Plant Location

2-1 Catchment Area

3-1 Ain El Basha Pump Station

3-2 Building Housing, Ain El Basha Pump Station

5-1 Layout of Wastewater Collection System (Preferred Alternative)

5-2 Conveyance Lines Profile (Trunk line A)

5-3 Conveyance Lines Profile (Trunk line B)

5-4 Conveyance Lines Profile (Trunk line C)

5-5 Conveyance Lines Profile (Trunk line D)

6-1 Process Flow Diagram for Proposed Central WWTP

6-2 General Site Layout for Proposed Central WWTP

8-1 The Study Area

8-2 Ruins of a Roman Mausoleum and an Umayad Mosque in Jalad

9-1 Area Planted with Rain-fed Olive Trees

9-2 Area Covered by Forest Trees

9-3 Vegetable Crops Planted Under Drip Irrigation

9-4 Farm Planted With Squash Crop Under Drip Irrigation

9-5 Agro-climatic Zones of Jordan

9-6 Monthly Gross Irrigation Requirement and Available Effluent Water for Irrigation for the Year 2028

9-7 Monthly Effective Rainfall Amount versus Evapotranspiration Values Throughout the Year

10-1 Construction Phases of Wastewater Collection Network

Tables

1-1 Summary of Wastewater Treatment Feasibility Study Alternatives Analysis Ranking

1-2 Estimated 20-Year Net Present Value (by Alternative)

2-1 Meteorological Data for the Study Area

2-2 Study Area Population in Year 2008

2-3 Baqa'a WWTP Service Area Population in Year 2008

2-4 Population Growth Rates for the Balqa Governorate

2-5 Population Projections for the Year 2028

2-6 Baqa'a WWTP Service Area Population in Year 2028

2-7 Allowable Limits for Treated Wastewater Discharged Into Streams, Valleys, or Lakes

2-8 Allowable Limits for Water Reuse Applications for Irrigation Per Agriculture Use

3-1 Ain El Basha Pump Station Data

4-1 Adjusted Per Capita Wastewater Generation Rate for the Study Area

4-2 Current and Projected Service Area Population and Average Daily Flow

4-3 Projected 2028 Population and Average Daily Wastewater Flows for Selected Alternative

4-4 Projected 2028 Wastewater Flows and Contaminant Loadings for the Selected Alternative – Stage 1

4-5 Projected 2028 Wastewater Flows and Contaminant Loadings for the Selected Alternative – Stage 2

4-6 Total Projected 2028 Wastewater Flows and Contaminant Loadings for the Selected Alternative – Stages 1 and 2

5-1 Approximate Coordinates of WWTP and Pumping Station

5-2 Summary of Collection Network

5-3 Technical Data for Wastewater Pumping Station

6-1 Effluent Contaminant Limits and Goals for Process Modeling

6-2 Estimated Equipment Sizing for Influent Pump Station – Central WWTP

6-3 Estimated Equipment Sizing for Package Spiral Screen – Central WWTP

6-4 Estimated Equipment Sizing for Package Grit Removal – Central WWTP

6-5 Estimated Equipment Sizing for Process Reactors – Central WWTP

6-6 Estimated Equipment Sizing for Nitrified Recycle Pumps – Central WWTP

6-7 Estimated Equipment Sizing for Submersible Mixers – Central WWTP

6-8 Estimated Process Reactor Blower Sizing – Central WWTP

6-9 Estimated Secondary Clarifier and Scum Pump Sizing – Central WWTP

6-10 Estimated RAS Pump Sizing – Central WWTP

6-11 Estimated Disinfection System Chemical Addition Rates – Central WWTP

6-12 Estimated WAS Thickener Feed Pump Sizing – Central WWTP

6-13 Estimated Polymer Doses for WAS Thickener – Central WWTP

6-14 Estimated WAS Thickener Sizing – Central WWTP

6-15 Estimated Thickened WAS Pump Sizing – Central WWTP

6-16 Estimated Aerobic Digester Sizing – Central WWTP

6-17 Estimated Aerobic Digester Blower Sizing – Central WWTP

6-18 Estimated Dewatering Feed Sludge Pump Sizing – Central WWTP

6-19 Estimated Geotextile Tube Quantities – Central WWTP

7-1 Annual O&M Cost Estimate – Central WWTP

7-2 Recommended Employee Roles and Responsibilities – Proposed Central WWTP

7-3 Proposed Major Equipment by Unit Process – Central WWTP

7-4 Proposed Monitoring, Sampling, and Testing Requirements

9-1 Mean Monthly Reference Crop Evapotranspiration (ETo) Calculations for Catchment Area

10-1 Estimated Construction Cost and Land Acquisition Cost – Central WWTP

10-2 Estimated 20-Year Net Present Value – Central WWTP

10-3 Unit Rates of Sewer Lines Construction

10-4 Construction Stages of Sewer Network

10-5 Summary of Construction Stage of Sewer Network

10-6 Cost Estimate of Influent Pumping Station

10-7 Cost Estimate of Effluent Pipe

11-1 Equipment Vendors

12-1 Summary of Estimated Capital and O&M Costs for the Selected Alternative

12-2 Assumed Water and Sanitation Tariffs Breakdown

12-3 Statistical Data for Balqa Governorate

12-4 Distribution of Household by Income in Balqa Governorate, 2006

12-5 Tentative Project Cost Breakdown by Work Type (WWTP Only) (JD)

12-6 Capital Costs (WWTP Only) Recovery at 5 Percent Discount Rate

12-7 Capital Costs (WWTP Only) Recovery at 8 Percent Discount Rate

Appendices

A Technical Memorandum: Conceptual Design for New Wastewater Treatment Facility (Including Baqa'a Camp for Year 2028)

B Technical Memorandum: Conceptual Design for New Wastewater Treatment Facility (Including Baqa'a Wastewater Treatment Facility for Year 2028)

C Technical Memorandum: Selected Alternative for the Year 2035

D Technical Memorandum: Baqa'a Alternatives for the Year 2035

E Modeling Results for all Alternatives

SECTION 1

Introduction

1.1 Background

This study is funded by the United States Trade and Development Agency (US TDA) and administered through the Water Authority of Jordan (WAJ) to help address water-shortage-related issues for communities in and around the Salt area in Jordan.

According to the Water Poverty Index, Jordan (see Figure No. 1-1 below) is one of the 10 most water-deprived countries in the world, with less than 200 cubic meters of fresh water available to the average Jordanian. Lack of water is considered one of the most serious constraints to Jordan's economic growth. Jordan's climate is arid and annual rainfall varies from 50 mm in the desert to 600 mm in the eastern mountains close to the Jordan valley. However, a high level of evaporation (85 percent) contributes to the overall water shortage. Consequently, much of Jordan's future growth and prosperity resides with its capacity to harness and maximize its usage of existing water supply while simultaneously taking advantage of new and alternate methods of water conservation, supply, and reuse.

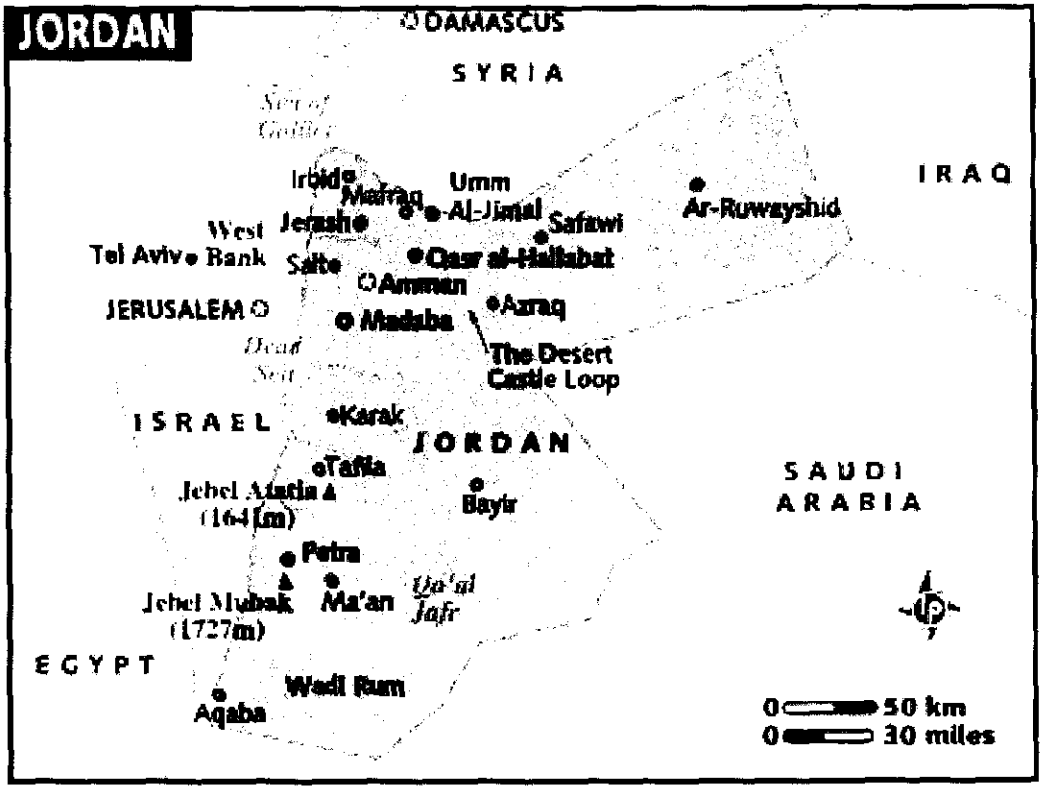

FIGURE 1-1
Map of Jordan

The population of Jordan is approximately 5,924,000 (2007 estimate), with some three-fourths of all Jordanians living in urban areas in and around main population centers of Amman, Al-Zarqā, Irbid, and Al-Ruṣayfah. Many of the smaller towns have only a few thousand inhabitants. Unfortunately, most of these communities do not have wastewater collection and treatment systems beyond the septic tanks and cesspits for each individual residence or building.

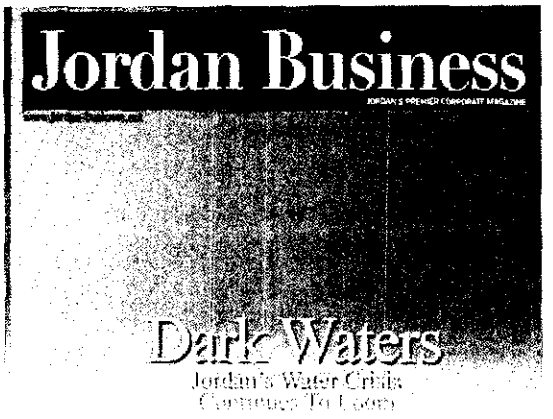

As noted in the Terms of Reference for this project, "there is no existing wastewater collection system to serve the communities east of Salt City in the Balqa'a Governorate of Jordan (project area). The population relies on cesspits and septic tanks to dispose of their wastewater. These cesspits or septic tanks are usually located in the garden or the backyard, but are sometimes found under the house itself or very close to the main road. The capacity and form of construction varies widely, but the most common pits are made of concrete blocks with a combination of percolation in the ground and emptying by septage tankers. Seepage from septic tanks has been observed in these areas, which constitutes major health risks and environmental pollution in the midst of populated areas." Today, the proportion of the Jordanian population that has access to wastewater services is nearly 65 percent, with the vast majority of this population centered in a few densely populated areas.

1.2 Project Scope

The overall scope of this project consists of preparing a technical and economic feasibility study for wastewater collection, wastewater treatment, and effluent reuse in the project area that will serve the needs of the communities to the year 2028. The study will also assess any environmental effects of the Project. Prior to developing the feasibility study however, a conceptual study that evaluates viable options for collection, conveyance, and treatment of the wastewater, was completed. This study follows up on the conceptual study to present the feasibility of implementing the overall selected alternative.

1.3 Summary of Conceptual Report

Discussions were conducted with the WAJ from the outset of the study to define the parameters from which reasonable and feasible infrastructure improvements could be evaluated. The study area consists of remote and loosely connected villages that lie in some very extreme topography and rough terrain. These factors affect the constructability of some of the considered alternatives, particularly with regard to sewer conveyance systems. Based on previous experience, WAJ generally prefers conventional gravity sewer systems and is somewhat averse to a network of pumping stations and force mains.

Consideration was given to developing collection system alternatives for the study area and conveying the wastewater to one of three existing wastewater treatment plants (WWTPs) within the region: Salt, Fuheis, and Baqa'a. However, during the conceptualization phase of this study, consultations and site visits conducted with WAJ resulted in the conclusion that none of these plants presented a feasible alternative for providing service to the study area. Two of the plants, Salt and Fuheis, were not within suitable proximity to reasonably accept flow from these villages. The third, Baqa'a, was plausible based on general proximity. However, this plant is already over-loaded, and due to site constraints, appreciably expanding and upgrading this plant would present significant challenges that would prove costly to overcome.

In fact, due to the over-loaded conditions associated with the Baqa'a WWTP, as well as WAJ's adverse opinion of pump stations, it was decided that the Ain Elbasha Pump Station (which currently conveys wastewater flow from Ain Elbasha to the Baqa'a plant), would be eliminated by constructing a gravity trunk line (which follows a natural wadi) to the study area.

As such, two extreme sewer conveyance/collection system conditions defined the boundaries of the considered solutions. Several options that resided between these extremes were evaluated as well. On one extreme, a completely conventional gravity sewer system, with one central WWTP, was considered. On the other extreme, a series of seven small satellite WWTP's constructed within the study area were considered. Between these two extremes, two options were considered that focused on overall trunk line reduction and/or overall satellite treatment plant reduction. Additionally, within these four alternatives, two primary treatment wastewater plant strategies were considered: the first for conventional wastewater treatment and another for advanced wastewater treatment. The advanced wastewater treatment option was based on membrane bioreactor (MBR) treatment systems. The advanced treatment option provided several advantages over conventional treatment alternatives, such as much smaller footprint, higher levels of automation, ready availability as pre-manufactured package systems, and very high quality of treatment. However, the conventional treatment option offered two primary advantages that were important to the overall evaluation: 1) it is less costly, and 2) it can meet regulatory permit limits. So unless some other issue becomes a major driver with respect to the type of treatment system selected, a conventional treatment system is the logical alternative.

Eight different options considered are defined as follows:

Alternatives No. 1A and 1B – Consists of one central WWTP with all wastewater conveyed to the plant via gravity trunk lines. Treatment options within this conveyance alternative (as with all the alternatives considered) included conventional and advanced wastewater treatment.

Alternatives No. 2A and 2B – Consists of one central WWTP with all wastewater conveyed to the plant via three pump stations, as well as gravity trunk lines. This option reduces the length of sewer trunk lines constructed and re-locates the central treatment plant further upstream (in comparison to Alternative No. 1) and much closer to the village of El Ermameen. Treatment options within these conveyance alternatives, as with all of the alternatives considered, included conventional and advanced wastewater treatment.

Alternatives No. 3A and 3B – Consists of three de-centralized WWTP's with all wastewater conveyed to these plants via four pump stations, as well as gravity trunk lines. This option significantly reduces the length of sewer trunk lines constructed, with three area plants (each serving several communities). Treatment options within this conveyance alternative, as with all the alternatives considered, included conventional and advanced wastewater treatment.

Alternatives No. 4A and 4B – Consists of seven small satellite WWTP's with all wastewater conveyed to these plants via three pump stations. This option reduces the length of sewer trunk lines constructed to a minimum, with roughly one plant for each major community within the study area. Treatment options within this conveyance alternative, as with all the alternatives considered, included conventional and advanced wastewater treatment.

Results of this evaluation are summarized in Table 1-1. As noted, Alternative 1A (centralized treatment plant with conventional treatment option, outlined in red) was the overall highest scoring alternative when both economic and non-economic factors were considered.

TABLE 1-1
Summary of Wastewater Treatment Feasibility Study Alternative Analysis Ranking

Alternative	Non-Cost Criteria Ranking	Cost-Criteria Ranking	Overall Weighted Ranking (Score)
Alternative 1A	3	2	1 (890)
Alternative 1B	1	6	2 (880)
Alternative 2A	7	1	4 (860)
Alternative 2B	4	4	3 (865)
Alternative 3A	5	2	4 (860)
Alternative 3B	2	7	6(845)
Alternative 4A	8	5	7 (800)
Alternative 4B	5	8	8(795)

Notes:

"A" refers to conventional treatment option for the Alternative.

"B" refers to advanced (membrane) option for the Alternative.

The scoring criteria and weights used for this assessment were developed from discussions with WAJ. Overall net present value economic analyses were performed on each alternative. Resultant costs are presented in Table 1-2 below. As shown, if economic costs alone were considered, Alternative 3A would actually be the preferred alternative. However, when non-economic costs are factored in, Alternative 1A becomes the higher ranking alternative, as shown in Table 1-1 above. The capital and operating costs, used to select the best alternative were adjusted during the final feasibility study to reflect current constructions costs prevailing in Jordan.

TABLE 1-2
Estimated 20-Year Net Present Value (by Alternative)

Description	Estimated NPV (with Conventional WWTPs)	Estimated NPV (with Advanced WWTPs)
Alternative 1	JOD 58,685,000	JOD 62,887,000
Alternative 2	JOD 55,790,000	JOD 59,992,000
Alternative 3	JOD 55,474,000	JOD 61,876,000
Alternative 4	JOD 61,132,000	JOD 68,059,000

1.4 Wastewater Treatment Plant Site Selection

Several potential sites were selected, visited, and evaluated for WWTP location. Amongst the main site selection criteria the following were considered of highest importance:

- Gravity wastewater collection and conveyance to the central WWTP
- Proximity to the treated effluent discharge point (King Talal Dam
- Sufficient size of the selected site to accommodate future WWTP expansion, required for the addition of portion or the entire flow from Baqa'a wastewater treatment plant

Figure 1-2 shows the location of the selected site in comparison with study area municipalities and the existing WWTP's.

1.5 Recommendation

Based on the overall consideration of eight different alternatives, it is recommended that this study proceed on the basis of providing wastewater treatment service to the study area under the parameters defined by Alternative 1A, and that a central treatment plant be developed using conventional biological nutrient removal wastewater treatment technology. Treated effluent reuse was not practical in the study area and discharge into King Talal Dam was recommended.

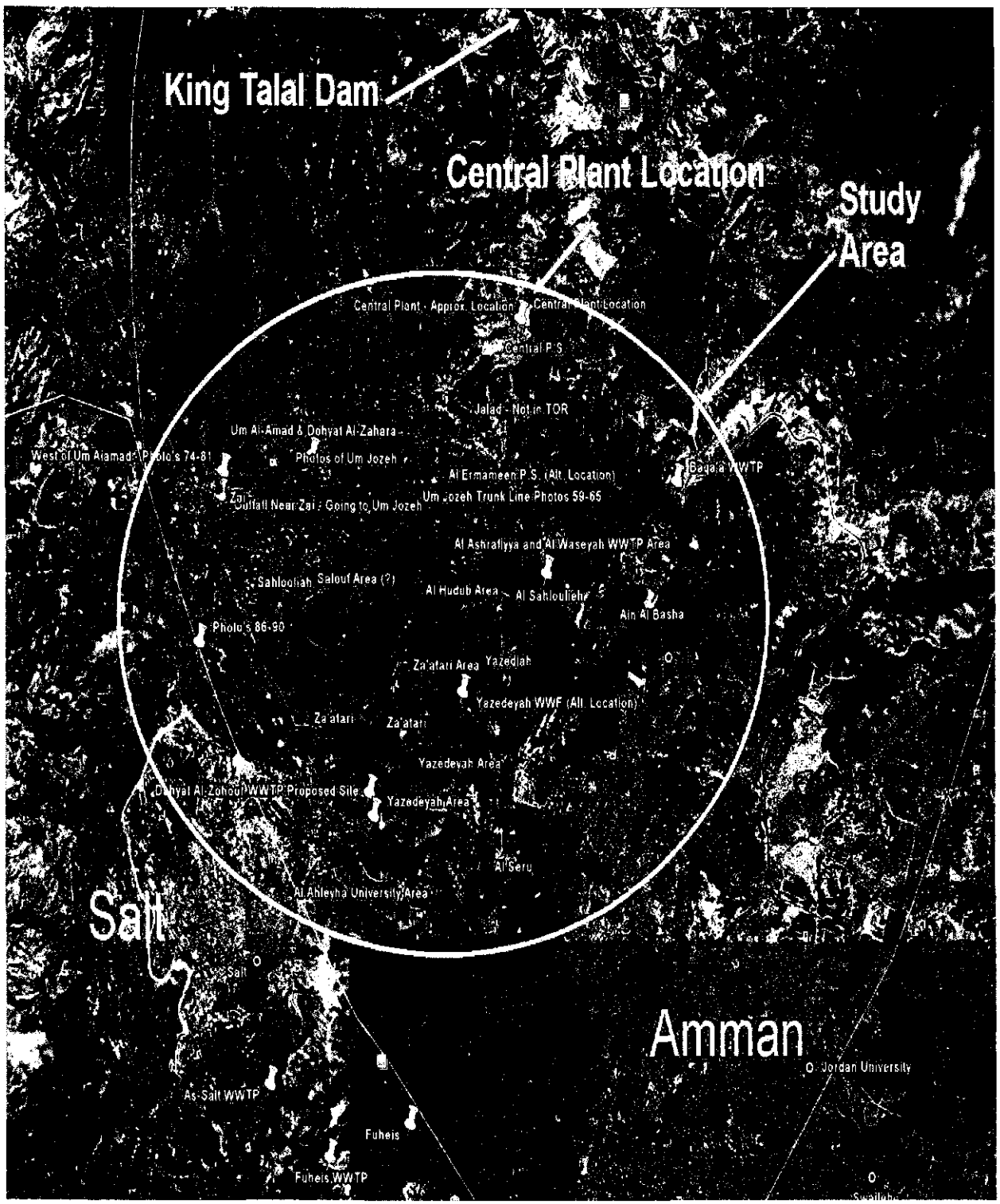

FIGURE 1-2
Treatment Plant Location

SECTION 2

General Design Factors

The Study Area covers the villages and communities within the catchments area of Wadi Ermameen as shown on Figure 2-1. Boundaries of the Study Area consist of the topographic boundaries of Wadi Ermameen rather than the administrative boundaries of villages and communities.

No central wastewater treatment systems exist for any of the communities in the service area beyond individual septic tanks and cesspits. During the initial conceptualization phase of the project, meetings and site visits were conducted with WAJ staff to assess the feasibility of providing service to these communities via existing wastewater treatment facilities or by constructing new wastewater treatment facilities. With regard to the existing facilities, WWTP's in Fuheis, Salt, and Baqa'a had previously been identified in the Definitional Mission for consideration in this study. However, field reconnaissance and further study quickly determined that both the Fuheis and Salt WWTP's were too far away to reasonably provide service to the study area, as the distance and terrain made it impractical to do so.

On the other hand, the Baqa'a WWTP was relatively close in proximity to the study area as compared to the other two plants. Unfortunately, the Baqa'a plant is also currently overloaded, which would necessitate that a significant upgrade to this plant be undertaken in order to add the study area to this facility. Due to site constraints, there are significant logistical impediments to effectively expanding the capacity of this plant. As such, any upgrade or expansion of this plant would be inherently expensive. Further, the Baqa'a plant is upstream of the study area and in a different watershed. So although it is relatively close in proximity, conveying wastewater from the study area to the Baqa'a plant would be very difficult, requiring a pump station with a very long force main traversing extreme topography. Not only would this necessitate an inordinately large pump station from a power standpoint, the excessive length of the force main would result in a very long retention time for the wastewater, thus increasing septicity and odor issues for the Baqa'a plant that are already cause for concern for WAJ.

Consequently, the decision was made during the project conceptualization phase (through field investigations and discussions with WAJ) that adding wastewater flow to the Baqa'a plant and expanding its capacity was infeasible. Further, because the Ain Elbasha Pump Station is just upstream of the study area, the consensus was that significant advantages would result from re-directing the wastewater flow from this pump station to any new treatment facility constructed in the study area by constructing a gravity trunk sewer from the station to the new plant.

Not only would this concept reduce the load on the existing Baqa'a treatment plant, it would also eliminate the Ain Elbasha Pump Station. As such, the study area was amended slightly to include the area being served by the Ain Elbasha Pump Station.

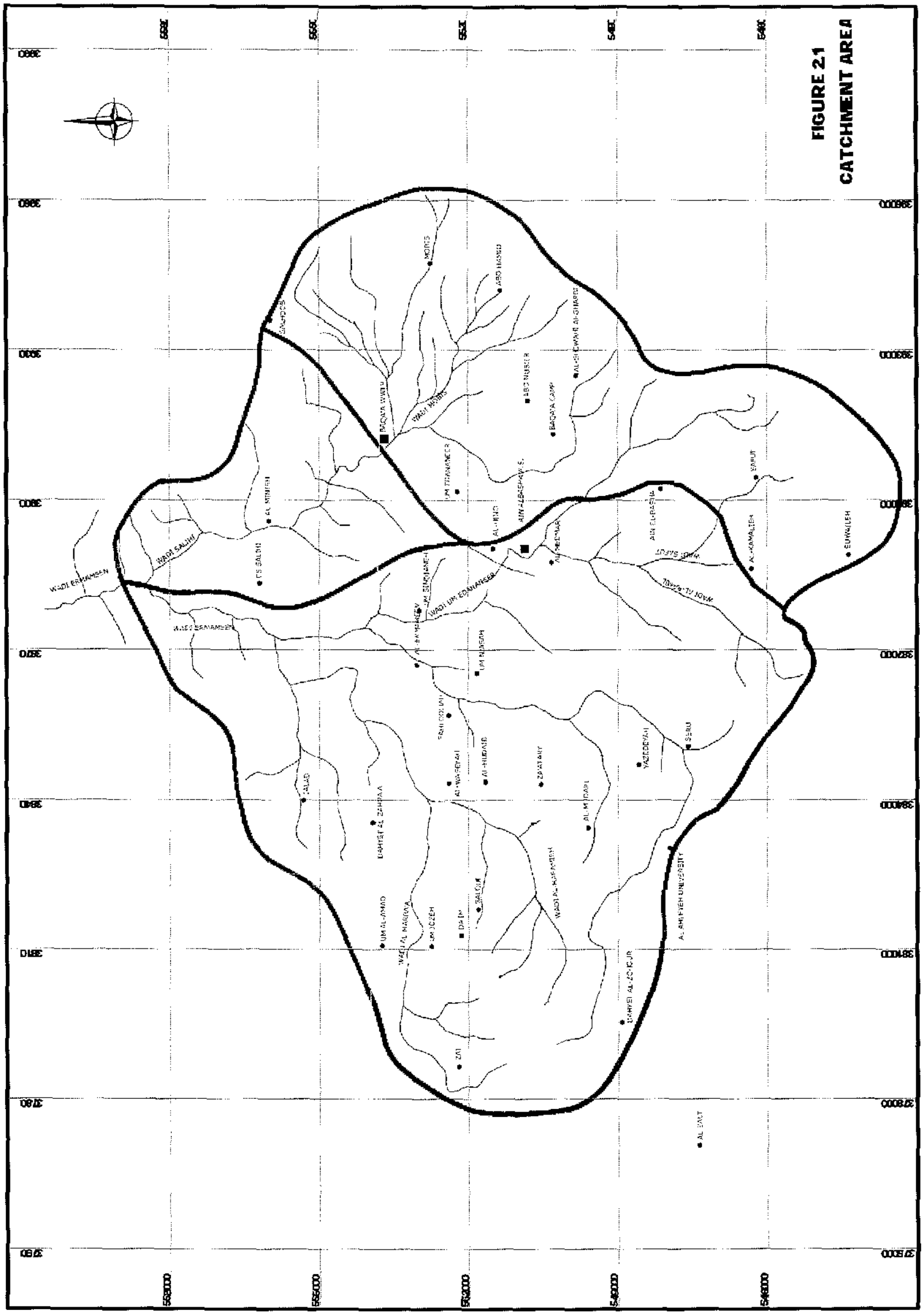

FIGURE 2.1
CATCHMENT AREA

Another key element concerning the study area was determining which communities within the watershed area would be included in the study. The Definitional Mission for this study had listed a number of communities in the Terms of Reference (TOR) section to be considered. However, it was clear upon further study that this was not necessarily an all-inclusive list and that no other areas within the watershed should be considered – primarily because some communities with a higher population were not listed within the TOR and could be more readily served than those communities that were listed in the TOR. Discussions concerning these anomalies were conducted with WAJ to clarify the parameters for the study area. As a result of these discussions, WAJ requested that the project team include all reasonable and feasible communities in the study and that concepts for providing wastewater facilities would be prioritized, based in part on the population of the community and the degree of difficulty associated with providing service to the area.

2.1 Climate

Jordan has a rather moderate, Mediterranean style climate, with a rainy season that typically lasts from November to April, which is subsequently followed by a dry season that lasts the remainder of the year. Jordan's climate is quite variable from the east (Jordan River valley) and south (with the Mediterranean Sea) to the desert areas to the east. The uplands near the Jordan River valley can get as much as 400 mm of rainfall a year, while the valley itself can see on average about 200 mm per year. The desert regions themselves can get as little as 50 mm of rainfall per year. Meteorological data for the study area is provided in Table 2-1 below.

TABLE 2-1
Meteorological for the Study Area

Parameter	Jan	Feb	Mar	Apr	May	Jun	Jul	Aug	Sept	Oct	Nov	Dec	Yearly
Mean Air Temp (°C)	7.8	7.8	10	15.5	20.3	22.3	24.4	24.6	23.1	20.4	14.7	10.3	16.8
Mean Max. Air Temp (°C)	10.6	11	13.7	20.3	25.4	27.7	29.3	29.5	27.9	24.8	18.3	12.9	21
Mean Min. Air Temp (°C)	5	4.3	6.3	10.7	15.2	17.4	19.4	19.6	18.3	16	11.1	6.9	12.5
Total Rainfall Amount (mm)	139.5	119.7	99.7	26.4	3.2	0.2	0	0	0.2	13.4	49.7	99.5	551.5
Daily Mean Relative Humidity (%)	77.3	76.6	70.1	52	45.8	49.4	54.5	57.4	57.5	57.1	62.5	73.2	61.1
Mean Pressure at Station Level (HPa)	909.9	909.4	908	907.3	907.1	905.8	904.2	905.3	907.6	910.1	910.5	911.3	908.1
Mean Pressure at Mean Sea Lever (HPa)	1474	1471	1458	1464	1473	1463	1448	1460	1480	1498	1492	1494	1470

Source: Department of Statistics

2.2 Current Population

Population figures are required in order to develop present and projected domestic water consumption and, thus, future wastewater hydraulic and organic loads. Population growth is the most significant factor in the growth of wastewater production for the study area. Municipal wastewater flow projections were estimated as fractions of the water consumption calculated from estimates of population and per capita water consumption. Municipal wastewater generation estimates are needed to determine the design capacities required for collection, conveyance, and treatment facilities and to consider the reuse of the effluent. Waste loadings and characteristics that are needed for design of treatment facilities will be estimated based on population and socioeconomic characteristics of that population.

The existing Study Area population was determined from the 2004 Census data. Population forecasts for the Study Area for the 20 year planning period to 2028 were based on this 2004 census data and the study of trends in population growth. The estimated Study Area for 2008 community populations is given in Table 2-2.

TABLE 2-2
Study Area Population in Year 2008

Locality	Population in 2008
Yazedeyah	1,209
Za'atary	1,396
Al-Hodaib	339
Al-Ermameen	1,950
Um Jozeh	2,811
Al-Waseyah	345
Ain Elbasha [a]	41,737
Al Seru/Ahleyah University	2,144
Daheyat Zohour	969
Daheyat Al-Zahra	393
Jalad	709
Al Sahloulieh	394
Um Njasa	811
Al Hino	3,951
Um Sindianeh	223
Al Mudari	820
Um AlAlamad	1,299
Daam	517
Salouf	480
Wadi Al Naqa	264
Zai	3,286
Total	**66,047**
Total Currently Served	**41,737**
Total Currently Not Served	**24,310**

[a] Currently served by the Baqa'a Wastewater Treatment Facility

Notes:

Communities not in the Definitional Mission Terms of Reference are shown in red.

Source: Jordanian Department of Statistics

According to the Department of Statistics, the estimated population in 2008 is approximately 66,000, including the area of Ain Elbasha, which as noted previously is currently connected to the Baqa'a WWTF sewer system through the Ain Elbasha Pump Station.

The current overall population being served by the Baqa'a WWTF is shown in Table 2-3 below. By re-directing wastewater flow from the area served by the Ain Elbasha pump station, approximately 10 percent of the current load to the Baqa'a WWTP will be eliminated (in terms of population), thus reducing overall hydraulic and organic loading to this plant.

TABLE 2-3
Baqa'a WWTP Service Area Population in Year 2008

Localities currently connected to Baqa'a WWTP	Population in 2008
Suweilih	50,552
Kamaliah	17,031
Ain El Basha West (served by the Ain El Basha Pump Station)	*20,869*
Ain El Basha East (connected by gravity to the Baqa'a WWTP)	*20,868*
Safut	8,308
Um Aldananeer	804
Al Shuwaihi	2,529
Abu Nuseir	6,302
Salhob	2,259
Abo Hamid	975
Mubis	3,019
Baqa'a Camp	66,858
Current Total	**200,374**
Current Total without Ain El Basha West	**179,505**
Percent Reduction in Population by taking Ain Elbasha West off the Baqa'a WWTF	**10%**

2.3 Future Population

Population projections for the study area have been assessed to the design horizon year 2028. Calculation of future population estimates have been carried out using declining growth obtained from the Department of Statistics (DOS), which is applicable to the entire Balqa Governorate.

2.3.1 Population Growth Rates

Population growth rates are the means used to project existing population into the future. Natural increase is the result of births and deaths among the population and is high when the average age is low. Net migration for an area may be positive (immigration) or negative (emigration). Growth rates are the means by which all of the factors expected to influence growth are expressed. These factors that affect natural increase and net migration include population policies, such as attitudes toward birth control, economic prospects that affect family size and migration trends, the regional state of peace, agricultural/industrial growth, and the general trend toward urbanization. Some of these factors are more important to the overall growth rate of the Kingdom, and others are more significant to growth of urban areas.

In general, recent population growth rates for Jordan have exceeded 3 percent per year. However, these rates have started to decline and are anticipated to decline even further in the future, as shown in Table 2-4. As outlined above, a number of reasons are responsible for this decline, with continued urbanization and increased birth control being two primary factors.

TABLE 2-4
Population Growth Rates for the Balqa Governorate

Year	Growth Rate (%)
2005	2.3
2006	2.3
2007	2.2
2008	2.0
2009	2.0
2010	2.0
2011	2.0
2012	1.9
2013	1.8
2014	1.7
2015	1.6
2016-2028	1.5

Source: Department of Statistics (2005-2016)

2.3.2 Population Projections

Population projections were the first step toward forecasts of domestic water demands, then of domestic wastewater generation, and finally of domestic waste loadings. These projections will be used to determine the overall size of the conveyance sewer lines and treatment facilities for each alternative considered. As noted in the Definitional Mission for this project, the plan year for this study is 2028. Based on the population growth rates noted above for communities within the Balqa Governorate, the projected population for each community for Year 2028 is provided below in Table 2-5.

As noted previously, the communities originally listed in the Definitional Mission Terms of Reference are distinguished from those communities that lie within the watershed, but were not listed. For this project, WAJ confirmed that conceptual level plans would be developed for serving all communities, and that prioritizations would be made regarding which communities would ultimately be served (and when) based on the size of the population in the community and the degree of difficulty (and thus cost) for providing service.

Even with the declining growth rates (reference Table 2-4), the overall population growth for the service area between 2008 and 2028 is expected to result in an increase of approximately 38 percent from nearly 66,000 in 2008 to roughly 91,000 in 2028.

TABLE 2-5
Population Projections for the Year 2028

Locality	Total Population 2028	Serviced Population 2028
Yazedeyah	1,669	1,502
Za'atary	1,928	1,735
Hodaib	468	421
Al-Ermameen	2,691	2,422
Um Jozeh	3,881	3,493
Al-Waseyah	476	428
Ain El Basha [a]	*57,629*	*27,113*
Al Seru / Ahleyah University	2,959	2,663
Daheyat Zohour	1,337	1,203
Daheyat Al-Zahra	542	488
Jalad	979	881
Al Sahloulieh	544	490
Um Njasa	1,119	1,007
Al Hino	5,402	4,862
Um Sindianeh	307	276
Al Mudari	1,132	1,019
Um AlAlamad	1,794	1,615
Daam	714	643
Salouf	663	597
Wadi Al Naqa	365	329
Zai	4,536	4,082
Total	**91,135**	**57,269**

[a] Currently served by the Baqa'a Wastewater Treatment Facility

Notes:

Communities not in the Definitional Mission Terms of Reference are shown in red.

Source: Department of Statistics

More importantly, perhaps by re-directing flow from Ain Elbasha to a new wastewater treatment facility located within the boundaries of the study area, the existing load to the Baqa'a WWTF is reduced considerably. By taking the Ain Elbasha flow off of the Baqa'a WWTF, the population served by the Baqa'a WWTF increases by only about 10 percent from 2008 to 2028. Consequently, any improvements ultimately required for the Baqa'a WWTF will be a function of the age and performance of the plant and not its hydraulic capacity.

Further, by eliminating the Ain Elbasha Pump Station, overall operation and maintenance requirements for this area are reduced considerably. The population for the Baqa'a WWTF service area is shown in Table 2-6, below.

TABLE 2-6
Baqa'a WWTP Service Area Population in Year 2028

Localities Currently Connected to Baqa'a WWTP	Total Population 2028	Serviced Population2028
Suweilih	69,800	62,820
Kamaliah	23,515	21,164
Ain El Basha West	*30,126*	27,113
Ain El Basha East	*27,503*	24,753
Safut	11,471	10,324
Um Aldananeer	1,110	999
Al Shuwaihi	3,492	3,143
Abu Nuseir	8,702	7,832
Salhob	3,120	2,808
Abo Hamid	1,347	1,212
Mubis	4,168	3,751
Baqa'a Camp	91,409	82,268
2028 Total	**275,763**	**248,187**
2028 Total without Ain Elbasha West	**245,637**	**221,073**
Percent Increase in Population from 2008 to 2028 without Ain El Basha West	**36.84%**	

2.4 Effluent Standards

Wastewater disposal criteria for Jordan are administered through the WAJ, which was originally established in 1983 as an autonomous corporate body, directly linked with the Prime Minister. The Water Authority is responsible for the public water supply and wastewater services, as well as for the overall water resources planning and monitoring. Wastewater effluent criteria are based on Jordanian Standards JS 893/2006 Reclaimed Water Specifications, which are broken down into subsequent standards for discharge to wadis, as well as for reclaimed water.

In general, discharge is anticipated to be routed to local wadis, given that the watershed for the study area discharges to the King Talal Reservoir, which therefore establishes the discharge as a beneficial reuse given that the water supply from this dam is used to provide irrigational water to the Jordan River Valley during the dry season. As such, less stringent effluent limitations are anticipated to be based on a discharge to adjacent wadis. Criteria for wastewater discharge are provided below in Table 2-7.

TABLE 2-7
Allowable Limits for Treated Wastewater Discharged Into Streams, Valleys, or Lakes

Standards	Allowable concentration
Biochemical Oxygen Demand (BOD_5)(mg/L)	60*
Chemical Oxygen Demand (COD) (mg/L)	150**
Dissolved Oxygen (CO) (mg/L)	<1
Total Suspended Solids (TSS) (mg/L)	60**
pH (unit)	6-9
NO_3 (mg/L)	80
T-N (mg/L)	70
E. coli MPN or CFU / 100mL	1000
Intestinal Helminth Eggs (egg/L)	> or =1
Oil and Grease Content (FOG) (mg/L)	8

Wastewater criteria for water reuse applications are dependent on the type of agricultural activity that will be involved, as shown in Table 2-8 (taken from JS 893/2006) below.

TABLE 2-8
Allowable Limits for Water Reuse Applications for Irrigation Per Agriculture Use

Permitted limits according to aspects of uses				
Standards and characteristics	**Cooked vegetables, parks, playing ground, and side ways in populated areas**	**Fruit trees, highway trees, and green areas**	**Field crops, industrial crops, and forest trees**	**Roses**
BOD_5 (mg/L)	30	200	300	15
COD (mg/L)	100	500	500	50
DO (mg/L)	<2	-	-	> 2
TSS (mg/L)	50	200	300	15
pH (unit)	9-Jun	9-Jun	9-Jun	6.9
Turbidity (NTU)	10	-	-	5
NO_3 (mg/L)	30	45	70	45
T-N (mg/L)	45	70	100	70
E. Coli MPN or CFU/100 mL	100	1000	-	1.1
Intestinal Helminth Eggs (egg/L)	> or = 1	> or = 1	> or = 1	1≤
FOG (mg/L)	8	8	8	2

Note that wastewater discharge criteria have also been developed for groundwater recharge and are included in JS 893/2006. However, for this particular project and study area, groundwater recharge was not considered a feasible option for alternative evaluation.

SECTION 3

Review of Existing Collection and Treatment Systems

Three WWTP's, serving the communities of Salt, Fuheis, and Baqa'a area, are noted in the Terms of Reference for this study. Their reasonable proximity to the study prompted consideration for how they might be used. However, because of the logistical constraints associated with each of these WWTPs, none offer a feasible alternative for providing sewer service to the study area. Only one treatment facility, the Baqa'a Treatment Plant, is within close enough proximity to feasibly be of service, and, unfortunately, that particular treatment facility is currently overloaded.

As noted in the Conceptual Study for this project, the Ain El Basha Pump Station will be taken offline with the construction of a new Central WTP for the study area. The Ain El Basha Pump Station, which is located along the Wadi Um Ed Dananir, serves a tributary area that includes about 50 percent of the flow generated by the town of Ain El Basha.

Pertinent design data associated with the Ain El Basha Pump Station is provided below in Table 3-1.

TABLE 3-1
Ain El Basha Pump Station Data

Parameter	Units	Value
Hydraulic Capacity	m^3/h	108
Average Daily Flow	m^3/d	1,500
Total Dynamic Head	m	55
Power	watt	5,500
Influent Gravity Line Size	mm	500
Force Main Size	mm	300
Equalization Basin Size	m^3	600

The pump station consists of a dry pit submersible type triplex pumping arrangement with an underground equalization basin. Photos of the interior and exterior of the pump station are provided in Figures 3-1 and 3-2 on the following page.

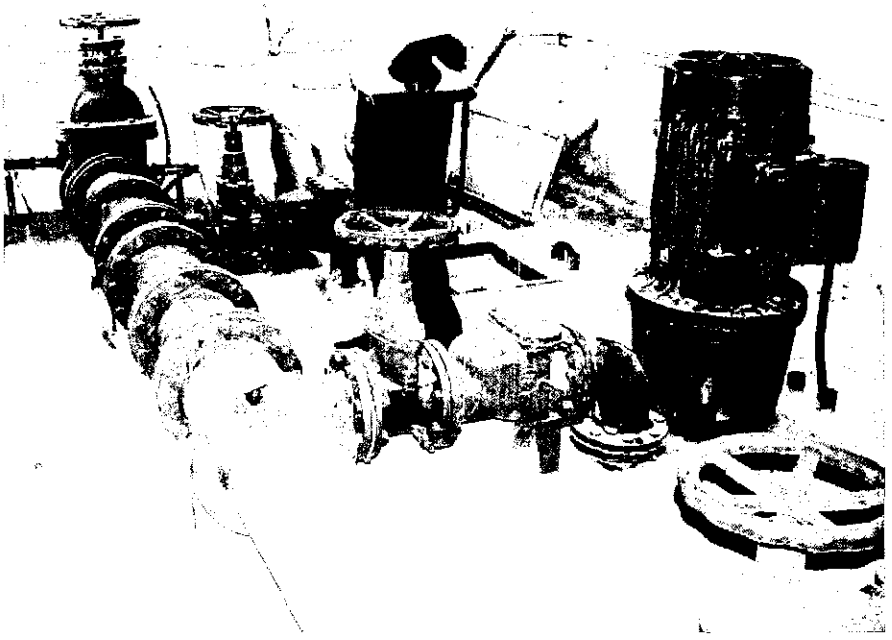

FIGURE 3-1
Ain El Basha Pump Station

FIGURE 3-2
Building Housing, Ain El Basha Pump Station

SECTION 4

Design Wastewater Flows and Waste Characteristics

4.1 Wastewater Flow Projections

The projected influent flows have been calculated in accordance with the projected population growth estimates, per capita water consumption rate, and the percentage of wastewater production as it relates to overall water consumption for the study area. Discussions were held with WAJ regarding the overall projected wastewater generation rate as it related to historical rates compared to projected rates. For the design year 2028, it was agreed that the adjusted per capita wastewater generation rate will be 115 L/c/d, as presented below in Table 4-1.

As noted, a long-term projected water usage rate of 132 L/c/d will be used, which assumes that administrative losses (e.g., water that is delivered to the customer but is not metered—such as illegal connections) are included and that 85 percent of this water is conveyed to the sewer system. Although these figures are substantially higher (more conservative) than current water consumption and sewer discharge estimates per capita, with current initiatives under way to relieve the water shortage in Jordan, the belief is that ultimately the water consumption will be commensurate with surrounding countries that do not experience significant water shortages.

TABLE 4-1
Adjusted Per Capita Wastewater Generation Rate for the Study Area

Year	2010	2015	2020	2025	2028
Per Capita Domestic Water Demand (L/c/d)	123	128	132	132	132
Conversion Factor (%)	85	85	85	85	85
Per Capita Wastewater Generation (L/c/d)	104.6	108.8	112.2	112.2	112.2
Adjusted Per Capita Wastewater Generation (L/c/d)	105	109	112	115	115

In addition to the detailed evaluation of the selected alternative, separate evaluations of alternatives treating portions of projected flow from the Baqa'a WWTP were conducted for this report. Specifically, estimated treatment plant sizing and costs were developed for a plant treating the study area population, plus Baqa'a Camp flows; as well as another option for a plant treating the study area population, plus all of Baqa'a WWTP flows. Results of these summary investigations are presented in Appendices A and B, respectively.

Existing service area populations and average daily flow conditions for the year 2008, as well as projected service area populations and average daily flow conditions for the years 2015, 2028, and 2035 are presented in Table 4-2. The year 2015 was added to the table as a potential Stage 1 completion date.

TABLE 4-2
Current and Projected Service Area Population and Average Daily Flow

		2008			2015			2028			2035		
		Total Population	Serviced Population	Average Daily Influent Flow (m^3/day)	Total Population	Projected Serviced Population	Projected Average Daily Influent Flow (m^3/day)	Total Population	Projected Serviced Population	Projected Average Daily Influent Flow (m^3/day)	Total Population	Projected Serviced Population	Projected Average Daily Influent Flow (m^3/day)
1	Selected Alternative Service Area	24,310	21,879	2,516	27,499	24,749	2,846	33,506	30,155	3,469	37,203	33,483	3,851
2	West Ain El Basha	20,869	18,782	2,160	24,818	22,336	2,569	30,126	27,113	3,118	33,436	30,092	3,461
3	Baqa'a Camp	66,858	60,172	6,920	74,491	67,042	7,710	91,409	82,268	9,461	101,450	91,305	10,500
4	Al Shuwaihi	2,529	2,276	262	2,876	2,588	298	3,492	3,143	361	3,876	3,488	401
5	East Ain El Basha	20,868	18,781	2,160	22,564	20,308	2,335	27,503	24,753	2,847	30,526	27,473	3,159
6	Remaining Portions of Baqa'a WWTP Service Area	89,250	80,325	9,237	101,323	91,191	10,487	123,233	110,910	12,755	136,773	123,096	14,156
7	Existing Baqa'a WWTP Service Area	204,325	183,893	21,148	230,414	207,373	23,848	281,165	253,049	29,101	312,050	280,845	32,297
8	Selected Alternative (1 + 2)	45,179	40,661	4,676	52,317	47,085	5,415	63,632	57,269	6,587	70,639	63,575	7,311
9	Additional Alternative (Appendix 8) (1 + 2 + 3 + 4)	114,566	103,109	11,858	129,684	116,716	13,422	158,533	142,680	16,409	175,966	158,369	18,212
10	Additional Alternative (Appendix 9) (1 + 2 + 3 + 4 + 5 + 6)	224,684	202,215	23,255	253,571	228,214	26,245	309,269	278,342	32,010	343,263	308,937	35,528

Notes:
Al Hino flows included with Selected Alternative and with Baqa'a WWTP (rows 1 and 7)
Assumed Ain El Basha West / East split in 2008 is 50% / 50%

Data in Table 4-2 can be used to determine better staging opportunities based on population growth, projected flows, and estimated collection costs. Flow components for the selected alternative are described in greater detail later in this section.

The projected influent flows for the selected alternative have been calculated based on the projected population growth estimates, per capita water consumption rate, and the percentage of wastewater production as it relates to overall water consumption for the study area. Discussions were held with WAJ regarding the overall projected wastewater generation rate as it related to historical rates compared to projected rates. For the design year 2028, the adjusted per capita wastewater generation rate has been agreed upon as 115 L/c/d. Table 4-3 shows projected populations and average daily flows for communities to be served under the selected alternative. The division of the selected alternative into stages as shown in Table 4-3 relates primarily to the construction of wastewater conveyance lines and associated pump stations. Construction of the wastewater treatment facility under the selected alternative is expected to occur in a single phase due to the comparatively small projected flow associated with Stage 2 and overall cost savings associated with single-phase construction. Wastewater flow projections were developed assuming 90 percent connection for the population in each community and are presented in Table 4-3 in both cubic meters per day and gallons per day.

TABLE 4-3
Projected 2028 Population and Average Daily Wastewater Flows for Selected Alternative

Stage	Community	Projected Population	Serviced Population	Projected Average Influent Flow (m^3/day)	Projected Average Influent Flow (gpd)
1	West Ain El-Basha Trunk Line	30,126	27,113	3,118	824,000
	Al-Ermameen	2,691	2,422	279	74,000
	Um Njasah	1,119	1,007	116	31,000
	Al-Mudari	1,132	1,019	117	31,000
	Yazedeyah	1,669	1,502	173	46,000
	Seru	2,959	2,663	306	81,000
	Dahyet Al-Zohour	1,337	1,203	138	37,000
	Za'atary	1,928	1,735	200	53,000
	Zai	4,536	4,082	469	125,000
	Um Jozeh	3,881	3,493	402	107,000
	Um Al-Amad	1,794	1,615	186	50,000
	Al-Hino	5,402	4,862	560	148,000
	Total for Stage 1	**58,574**	**52,717**	**6,063**	**1,607,000**
2	Um Sindianeh	307	276	32	9,000
	Sahlooliah	544	490	56	15,000

TABLE 4-3
Projected 2028 Population and Average Daily Wastewater Flows for Selected Alternative

Stage	Community	Projected Population	Serviced Population	Projected Average Influent Flow (m^3/day)	Projected Average Influent Flow (gpd)
	Al-Waseyah	476	428	49	14,000
	Al-Hudaib	468	421	48	13,000
	Da'im	714	643	74	20,000
	Salouf	663	597	69	19,000
	Wadi Al-Naqa	365	329	38	10,000
	Dahyet Al-Zahra'a	542	488	56	15,000
	Jalad	979	881	101	27,000
	Total for Stage 2	**5,058**	**4,552**	**524**	**142,000**

As presented in the CH2M HILL's *Final Conceptual Report for Wastewater Treatment Feasibility Study in Jordan (November 2008)*, influent contaminant concentrations for wastewater in Jordan are much higher than those in other parts of the world, primarily due to water shortages in Jordan. Influent wastewater flows and contaminant loadings were developed based on the influent wastewater characteristics for the Salt Wastewater Treatment Plant. Concentrations for the solids and organic parameters (chemical oxygen demand [COD], biochemical oxygen demand [BOD], and total suspended solids [TSS]) noted were taken directly from an average of the wastewater characteristics for Salt over a 1-year period (2007). Existing nutrient data for nitrogen and phosphorus were not available and were therefore derived in accordance with commonly accepted ratios of these parameters compared to the organic strength. Table 4-4 presents projected Stage 1 influent wastewater flows and contaminant loadings.

TABLE 4-4
Projected 2028 Wastewater Flows and Contaminant Loadings for the Selected Alternative – Stage 1

	Average Day Design		Maximum Month Design	
Parameter	(m^3/day, kg/day)	(gpd, lb/day)	(m^3/day, kg/day)	(gpd, lb/day)
Flow	6,082	1,607,000	8,515	2,249,800
COD	8,032	17,691	11,244	24,768
BOD	4,868	10,722	6,815	15,011
TSS	5,476	12,062	7,667	16,887
TKN	913	2,010	1,278	2,814
NH_3	548	1,206	767	1,689
TP	152	335	213	469

Table 4-5 presents projected additional influent wastewater flow and contaminant loadings associated with the completion of the Stage 2 wastewater conveyance system and pump station work.

TABLE 4-5

Projected 2028 Wastewater Flows and Contaminant Loadings for the Selected Alternative – Stage 2

	Average Day Design		Maximum Month Design	
Parameter	(m^3/day, kg/day)	(gpd, lb/day)	(m^3/day, kg/day)	(gpd, lb/day)
Flow	537	142,000	752	198,800
COD	710	1,563	994	2,189
BOD	430	947	602	1,326
TSS	484	1,066	677	1,492
TKN	81	178	113	249
NH_3	48	107	68	149
TP	13	30	19	41

Table 4-6 shows total projected 2028 influent wastewater flows and contaminant loadings for the selected alternative, and includes projected flows and loadings from both Stages 1 and 2. Values shown in Table 4-6 were used during preliminary modeling and equipment sizing activities for the proposed wastewater treatment facility associated with the selected alternative as presented in Section 6.

TABLE 4-6

Total Projected 2028 Wastewater Flows and Contaminant Loadings for the Selected Alternative – Stages 1 and 2

	Average Day Design		Maximum Month Design	
Parameter	(m^3/day, kg/day)	(gpd, lbs/day)	(m^3/day, kg/day)	(gpd, lbs/day)
Flow	6,619	1,749,000	9,267	2,448,600
COD	8,741	19,254	12,238	26,956
BOD	5,298	11,669	7,417	16,337
TSS	5,960	13,128	8,344	18,379
TKN	993	2,188	1,391	3,063
NH_3	596	1,313	834	1,838
TP	166	365	232	511

SECTION 5

Conveyance/Collection System

5.1 General

The function of the collection systems is to collect and transport wastewater from the communities to the selected wastewater treatment plant site for processing and eventual reuse.

The topography of the project areas includes many small Wadis (Wadi Al-Marba'a, Wadi Al-Haramieh, Wadi Al-Yazediah, and Wadi Um Edananeer) draining into the major Wadi of the region, Wadi Ermameen, which drains into King Talal Dam.

The service catchment area for the study area, which is about 100 km^2, comprises the following communities: Yazeheyah, Za'atari, Hodaib, Al-Ermameen, Um Jozeh, Al-Waseyah, Ain Elbasha, Al Seru, Ahleyah University, Daheyat Zuhour, Daheyat Al-Zahra, Jalaad, Al-Sahlulieh, Um Njasa, Um Aldananeer, Um Sindianeh, Al Mudari, Um Alamad, Daam, Salouf, Wadi Al Naqa, and Zai.

5.1.1 Localities Currently Connected to Baqa'a WWTP

The following communities are currently served by the Baqa'a WWTP: Suweilih, Kamaliah, Ain Albasha, Safut, Um Aldananeer, Al Shuwihi, Abu Nuseir, Salhob, Abo Hamid, Mubis, Baqa'a Camp, and Al-Hino.

The routing of the sewer lines has been selected to follow, as far as possible, the natural Wadi-courses. The selected site for the treatment plant is located such that all communities will be served by gravity flow.

The following terms have been used to define the sewers in relation to their functions:

- Trunk Sewer — Is the main sewer line, which collects wastewater from the branch sewers of the network in a village or a developed area and subsequently discharges into another trunk sewer, and then transports wastewater to the treatment plant.
- Network — Is the internal sewer system within a village or a developed area, which collects wastewater from the houses via house connections and discharges into a truck sewer.

  The network system of a community may consist of more than one sub-network depending upon the local topography and natural drainage courses.
- House Connection — Is a sewer that is an extension of the building plumbing and discharges into the public sewer (network).

Potential gravity main routes have been identified to the proposed treatment plant site; however, these routes will need to be confirmed by topographic survey. Pipe laying in these Wadis likely will be difficult.

The trunk sewers have been designed to a feasibility level, the design of which is shown in the relevant layouts.

For the internal sewer network, systems and house connections of the communities served have been drawn based on the available base maps for each community, and the respective quantities, as found necessary, have been estimated and incorporated into the cost estimate.

5.2 Preferred Alternative for Wastewater Collection Network

Based on the results of the Final Conceptual Study, the preferred alternative is No.1, which consists of one centralized conventional WWTP, conveying all wastewater to the plant via gravity trunk lines. Also, a wastewater pumping station will be built at the end of the trunk line, within the treatment plant site, to raise wastewater from the Wadi bed to the headworks of the plant.

Hydraulic calculations were performed to define the required pipe diameters for transferring the projected wastewater flow in 2028.

5.2.1 Location of Wastewater Treatment Plant and Pumping Station

Approximate coordinates for the preferred site for the wastewater plant and the influent pumping station are shown in Table 5-1.

TABLE 5-1
Approximate Coordinates of WWTP and Pumping Station

No.	WWTP Name	Coordinates N	Coordinates E	Elevation (m) Above mean sea level
1	Central WWTP	32-07-51.85	35-48-17.46	400
	Central Pumping Station	32-07-47.29	35-48-29.3	383

5.2.2 Wastewater Collection Network

In this alternative, all of the communities within the project catchment area are served by a central wastewater treatment located downstream of Ermmeen village, with a sewage pumping station located near Wadi Ermmeen to transfer wastewater flow up to the headworks of the WWTP. All of the wastewater collected in the sewer network and trunk lines drains by gravity flow to the central pumping station at the treatment plant site.

In the preferred alternative, Ain Al-Basha pumping station is abandoned, and the gravity trunk line along Wadi Um Eddananeer will transport the wastewater flow downstream to the central pumping station.

Table 5-2 shows the trunk line and sewer lengths with the corresponding diameters for the preferred alternative.

TABLE 5-2
Summary of Collection Network

Diameter (mm)	150	200	300	400	500	600
Length (m)	42280	165300	18415	5352	6098	6709

5.3 Wastewater Trunk Lines

All of the communities located within the catchment area of Wadi Ermameen are served by four sewer trunk lines (Line **A**, Line **B**, Line **C**, and Line **D**) located along the main Wadis (Wadi Um Edananeer, Wadi Al-Yazediah, Wadi Al-Marba'a and Wadi Al-Haramieh respectively) as shown in Figure 5-1.

The first part of trunk line **A** will serve the following communities: western part of Ain Al-Basha, Al-Hino, Um Njasah, and Um Sindianeh as it travels downstream of Wadi Um Edananeer.

The second part of Line **A** will convey all of the wastewater flow from trunk lines **B, C,** and **D** to the central influent pumping station located at Wadi Ermameen within the WWTP site.

Trunk line **B** will serve the following communities: Yazeheyah, part of Zatari, Al-Wasiah, Seru, Ahleyah University, Daheyat Zuhour, Al-Mudari, Sahloliah, and Ermameen.

Line **B** will be connected to Line **A** downstream of Ermameen village.

Trunk line **C** will serve the following communities: Zai, Um Jozeh, Um Al-Amad, Daheyat Al-Zahra, and Jalad.

Trunk line **D** will serve the following communities: Wadi A-Naqa, Salouf, Daem, and part of Zaatari.

Line **D** will be connected to Line **C** near the access road to Daheyat Al-Zahra community.

The sewer profiles for trunk lines **A, B, C and D** are shown in Figures 5-2, 5-3, 5-4, and 5-5, respectively.

Table 5-3 shows the technical data of the influent pumping station for the preferred alternative.

TABLE 5-3
Technical Data for Wastewater Pumping Station

Pumping Stations	No. of Pumps		Pump Type	Pump Capacity (m^3/h)	Approximate Pump Head (m)	Motor (kW)	Force Main Dia. (mm)	Length (m)
	Duty	Standby						
Central	2	1	Submersible	319	67	116	400	450

5.3.1 Treated Effluent Pipeline

The treated effluent pipeline with a diameter of 600 mm and a length of 2,500 m will be built to transfer the treated effluent from the treatment plant site along Wadi Ermmeen and then to King Talal Storage Dam.

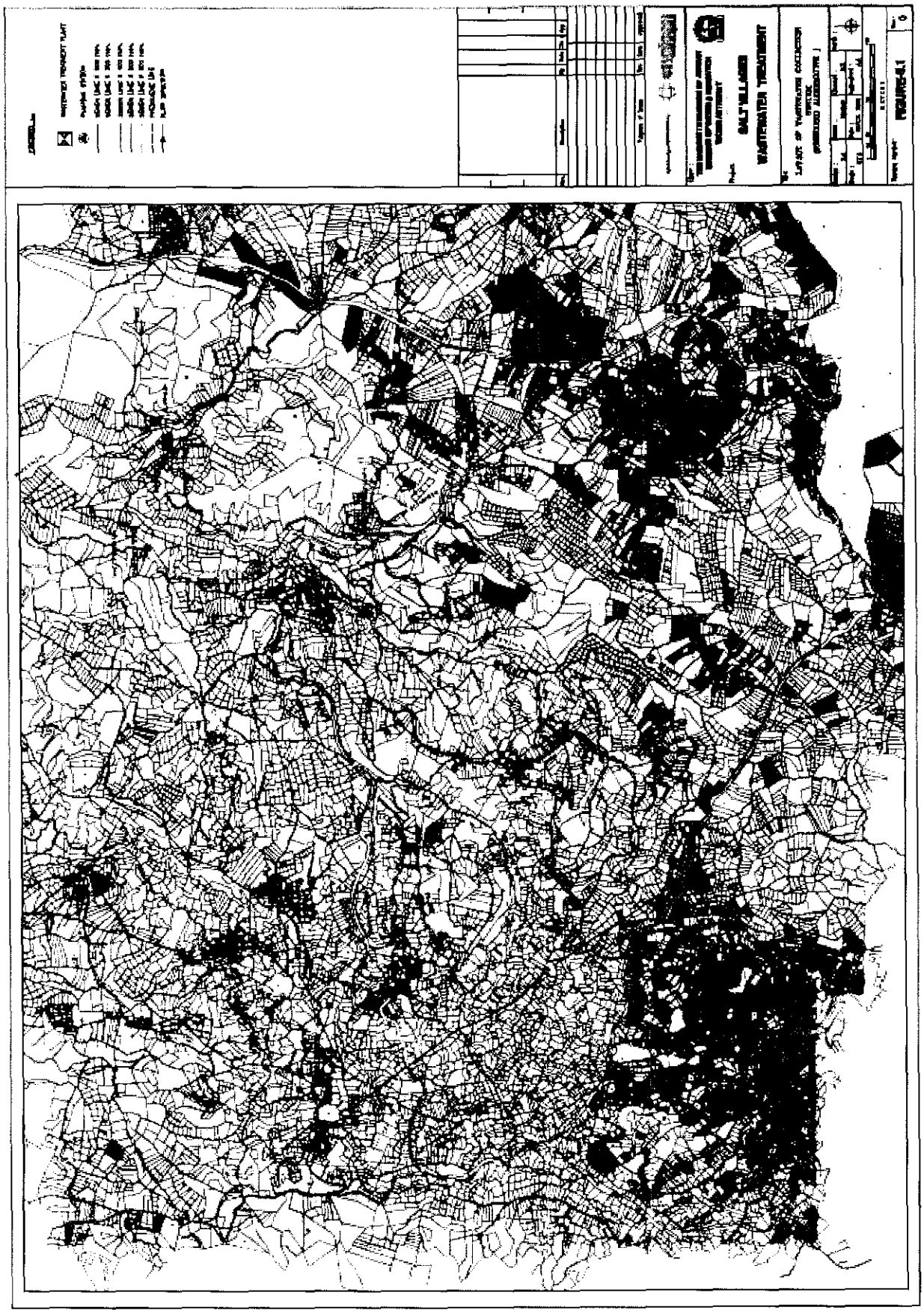
SALT VILLAGE
WASTEWATER TREATMENT
FIGURE 5-1

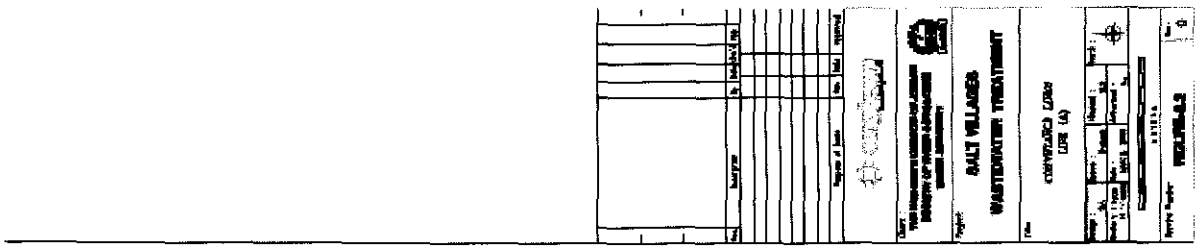
SALT VILLAGES
WASTEWATER TREATMENT

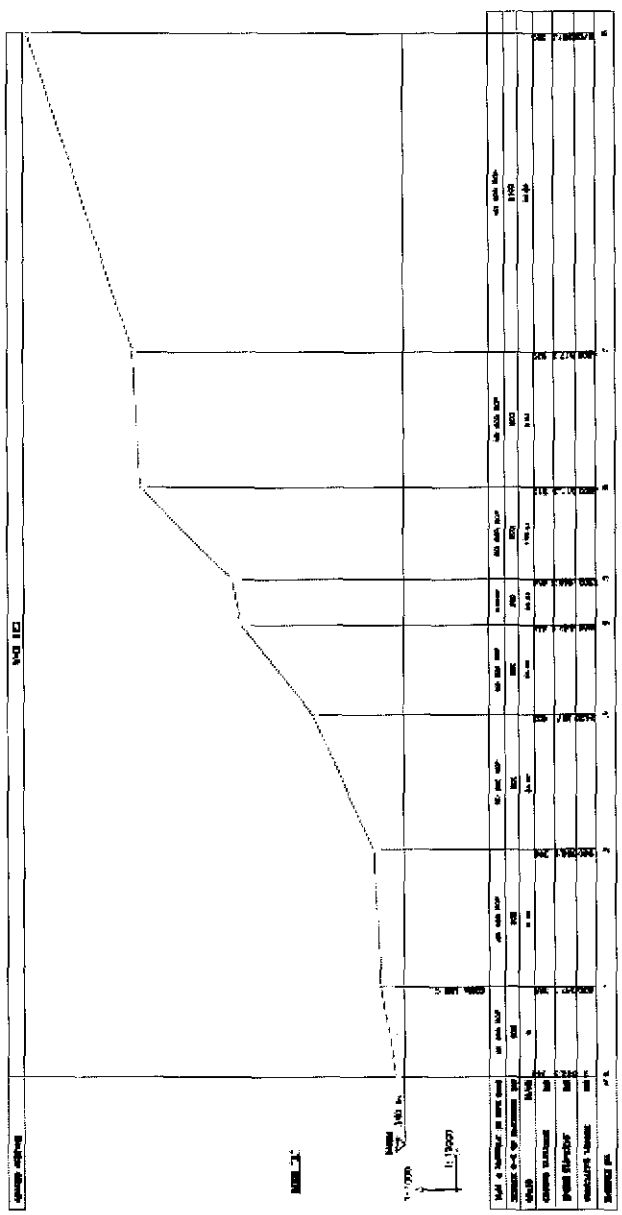

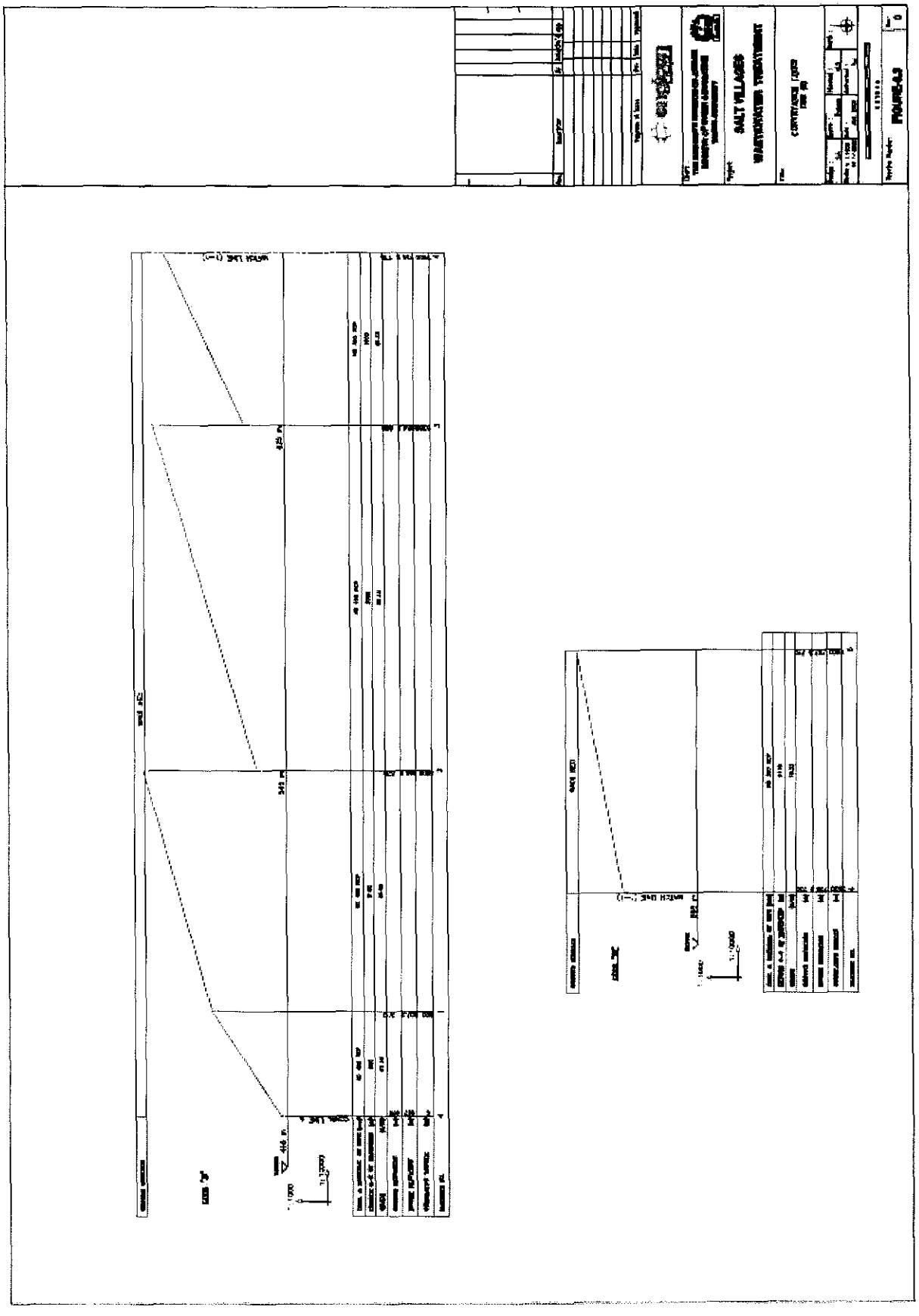
SALT VILLAGES
WASTEWATER TREATMENT
FIGURE 5.3

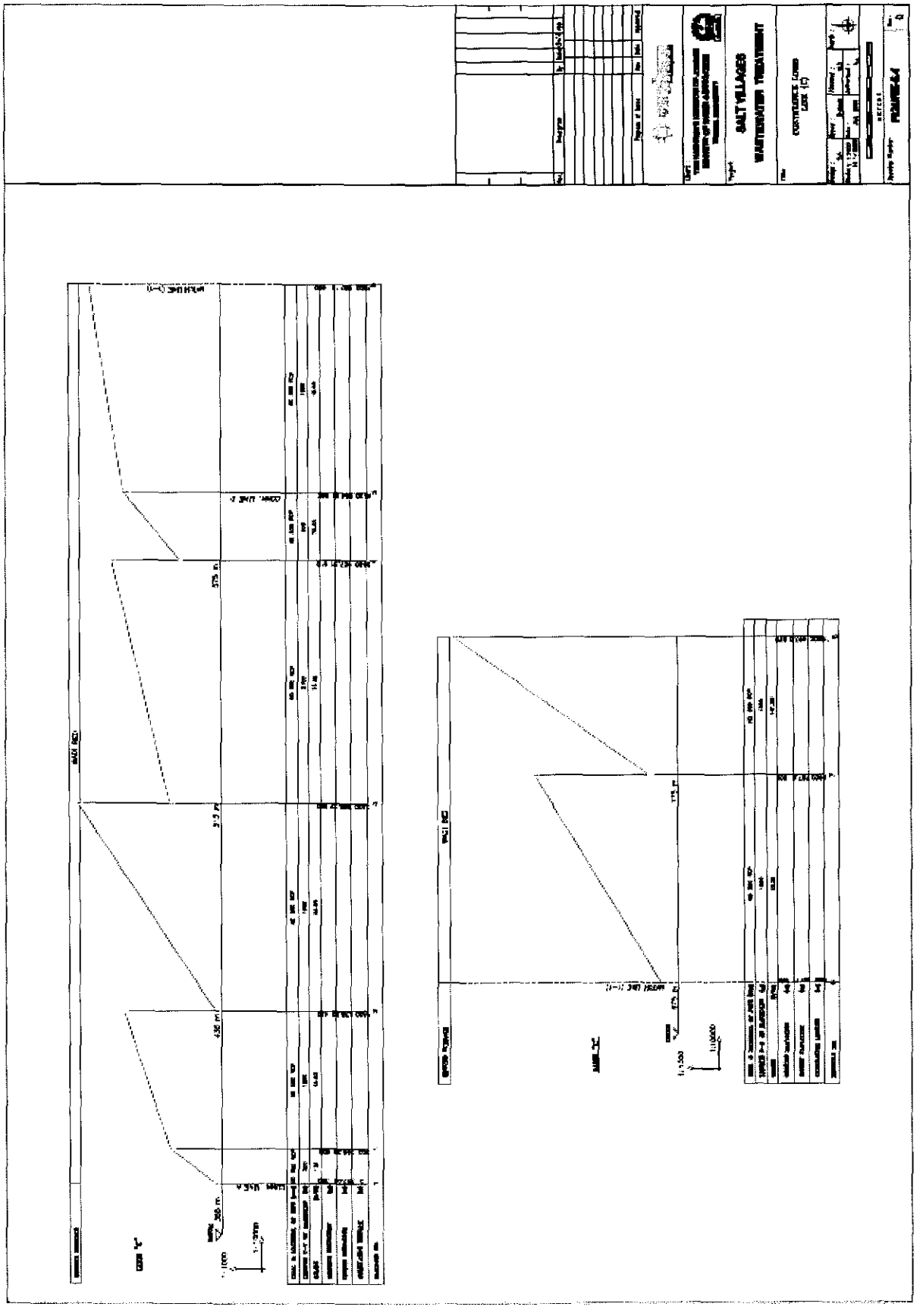

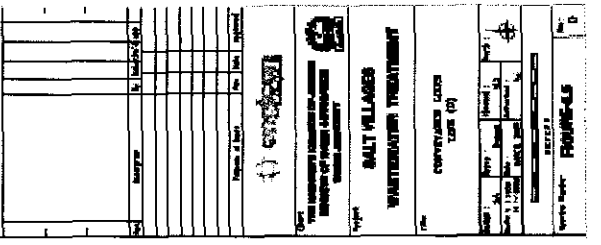
SALT VILLAGES
WASTEWATER TREATMENT
CONVEYANCE LEVEL
FIGURE-5

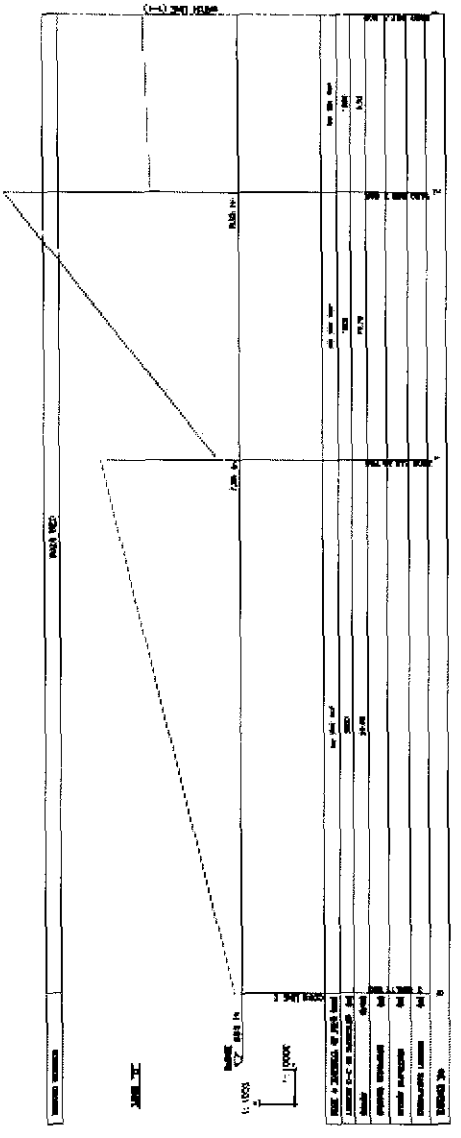

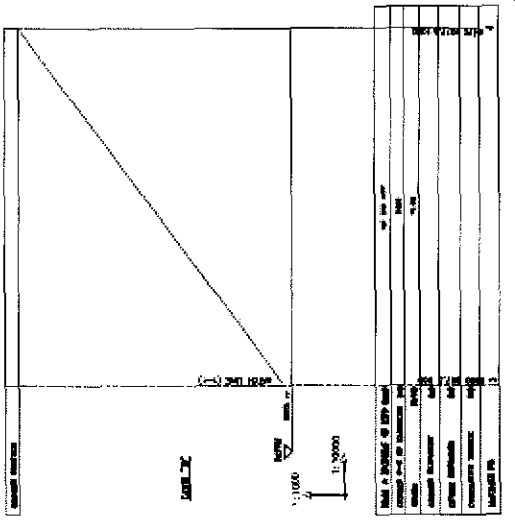

SECTION 6

Preliminary Engineering Design of the Selected Alternative (Central WWTP)

Preliminary engineering design for the proposed WWTP associated with the selected alternative (Central WWTP) was developed following completion of the CH2M HILL's *Final Conceptual Report for Wastewater Treatment Feasibility Study in Jordan (November 2008)*. This section of the report includes estimates for the WWTP and equipment layout and sizing for the selected alternative based on the results of the preliminary design effort.

6.1 Overall Process Flow Diagram and Site Plan

Figure 6-1 presents a process flow diagram for the proposed Central WWTP, which will include the following unit processes:

- Waste Activated Sludge (WAS) Thickening
- Aerobic Digestion
- Dewatering
- Influent pumping
- Screening
- Grit Removal
- Biological Treatment (Modified Ludzack-Ettinger Process)
- Clarification
- Disinfection

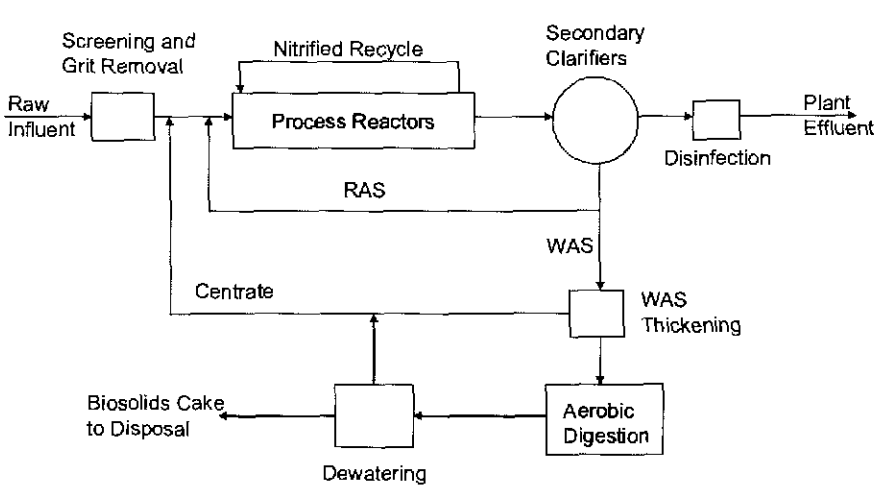

FIGURE 6-1
Process Flow Diagram for Proposed Central WWTP

Figure 6-2 shows a general site layout of the proposed Central WWTP based on equipment sizing estimates performed during the preliminary engineering design.

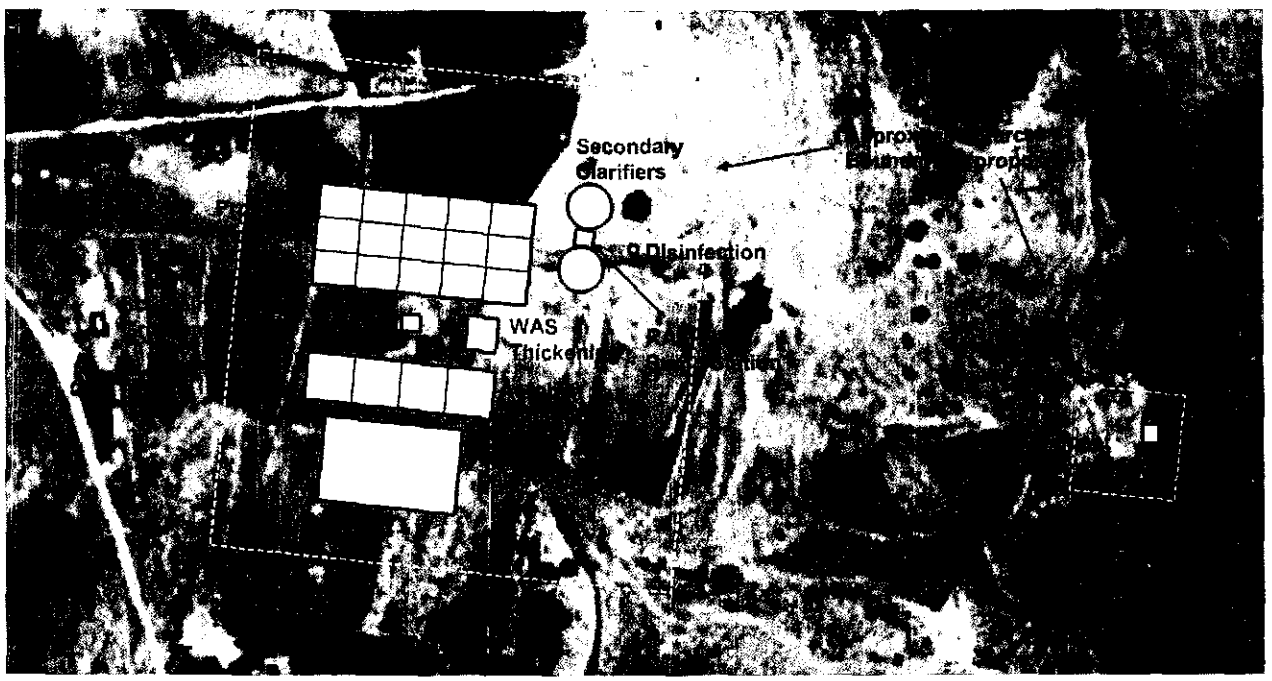

FIGURE 6-2
General Site Layout for Proposed Central WWTP

6.2 Basic Design Parameters and Equipment Description

The engineering sizing of the main biological treatment processes was based upon CH2M HILL's proprietary program Pro2D™. Pro2D™ is a whole plant simulation tool that allows engineers to design new WWTPs and to simulate the behavior of the facilities under different loading conditions. The computer process software used in Pro2D™ is based on industry accepted models for WWTPs, such as the International Water Association's (IWA) ASM model for activated sludge and ADM 1 for anaerobic digestion. Pro2D™ tracks 55 different wastewater components throughout the various processes within the WWTP and uses kinetic and stoichiometric information within ranges recommended by the experience of CH2M HILL, as well as sources such as the IWA.

Pro2D™ produces a comprehensive mass balance over the entire treatment plant, which allows designers to readily predict the impacts of changes made to the plant, in terms of both effluent quality and solids handling requirements. The results from Pro2D™ mass balance for each design period and design condition are integrated into the material and mass balance scenarios evaluated during process equipment sizing activities.

Influent flows and loadings for the design year 2028 were based on projected influent flows and contaminant loadings as presented in Section 4. Table 6-1 presents limits used for WWTP design for this study. In general, plant effluent contaminant concentration goals used during wastewater process model development were 70 percent of the effluent contaminant

concentration limits in order to provide a safety factor in biological process reactor and equipment sizing.

TABLE 6-1
Effluent Contaminant Limits and Goals for Process Modeling

Parameter	Effluent Limit (mg/L)
Total Suspended Solids	60.0
Biochemical Oxygen Demand ($CBOD_5$)	60.0
Chemical Oxygen Demand (COD)	150
Total Nitrogen (TN)	70.0
Nitrate (NO_3-N)	18.0
Total Phosphorus (TP)	15.0

Appropriate wastewater treatment equipment types and sizing were preliminarily selected based on the projected influent flow and loading values and expected service conditions for each unit process. Wastewater treatment equipment types and estimated sizing are presented in subsequent subsections.

6.3 Influent Pumping

Influent pumping for the proposed Central WWTP will consist of submersible pumps with adjustable frequency drives (AFDs). Estimated equipment sizing for influent pumping is presented in Table 6-2.

TABLE 6-2
Estimated Equipment Sizing for Influent Pump Station – Central WWTP

Parameter	Value
Type	Submersible with AFDs
Number	4
Operating Condition	3 duty, 1 standby
Capacity (each)	8,890 m^3/day (1,630 gpm)
Estimated Motor Power	40 kW (53 hp)

6.4 Headworks

Headworks for the proposed Central WWTP will consist of a package spiral screen with a manually cleaned bypass screen and package vortex grit removal. Estimated equipment sizing for screening and grit removal equipment is presented in Tables 6-3 and 6-4.

TABLE 6-3
Estimated Equipment Sizing for Package Spiral Screen – Central WWTP

Parameter	Value
Type	Package Spiral Screen
Number	1
Operating Condition	1 duty
Capacity (each)	26,500 m^3/day (7.00 mgd)
Estimated Motor Power	3.75 kW (5 hp)

TABLE 6-4
Estimated Equipment Sizing for Package Grit Removal – Central WWTP

Parameter	Value
Type	*Package Vortex Grit Removal*
Number	1
Operating Condition	1 duty
Capacity (each)	26,500 m^3/day (7.00 mgd)
Grit Pump Capacity	1,090 m^3/day (200 gpm)
Estimated Grit Pump Motor Power	3.75 kW (5 hp)

6.5 Biological Treatment

Biological treatment at the proposed Central WWTP will include concrete process reactors in a Modified Ludzack-Ettinger configuration consisting of anoxic and aerated process reactor zones designed to provide adequate treatment to meet effluent contaminant limits. Also included are submersible mixers to maintain solids suspension in anoxic portions of the process reactors, axial-flow pumps to convey nitrified recycle flow, and multi-stage centrifugal blowers to provide aeration. Estimated process reactor sizing is presented in Table 6-5.

TABLE 6-5
Estimated Equipment Sizing for Process Reactors – Central WWTP

Parameter	Value
Type	Conventional Modified Ludzack-Ettinger (MLE)
Number of Trains	3
Basin Material	Concrete
Total Volume	21,800 m^3 (5.76 MG)
Estimated Dimensions (per train)	12.8 m by 89.0 m (42 ft by 292 ft)
Total Number of Aeration Zones	3 per train
Side Water Depth	6.4 m (21 ft)

Estimated nitrified recycle pump sizing is presented in Table 6-6. Nitrified recycle pumping capacity is approximately 600 percent of the design influent flow rate.

TABLE 6-6
Estimated Equipment Sizing for Nitrified Recycle Pumps – Central WWTP

Parameter	Value
Type	Submersible, Axial Flow with AFDs
Number	3
Operating Condition	3 duty
Capacity (each)	21,260 m^3/day (3,900 gpm)
Estimated Motor Power	13 kW (17 hp)

Estimated submersible mixer sizing is shown in Table 6-7. Submersible mixers will be used to maintain mixing in the anoxic portions of each process reactor train.

TABLE 6-7
Estimated Equipment Sizing for Submersible Mixers – Central WWTP

Parameter	Value
Number	2 / train
Estimated Motor Power	11 kW (15 hp)

Estimated process reactor blower sizing is shown in Table 6-8.

TABLE 6-8
Estimated Process Reactor Blower Sizing – Central WWTP

Parameter	Value
Type	Multi-Stage Centrifugal with AFDs
Number	4
Operating Condition	3 duty, 1 standby
Capacity (each)	5,650 N*m^3/h (3,320 scfm)
Estimated Motor Power	158 kW (212 hp)

6.6 Secondary Clarification

The proposed Central WWTP will include concrete circular secondary clarifiers for solids removal prior to disinfection. A scum pump, Return Activated Sludge (RAS) pumps, and Waste Activated Sludge (WAS) thickener feed pumps will also be included. Table 6-9 shows estimated equipment sizing for the proposed secondary clarifiers and scum pump.

TABLE 6-9
Estimated Secondary Clarifier and Scum Pump Sizing – Central WWTP

Parameter	Value
Number	2
Type	Center-Feed Circular
Diameter	18.3 m (60 ft)
Side Water Depth	5 m (16 ft)
Surface Area	256 m^2 (2,750 ft^2)
Scum Pump	1 at 3.75 kW (1 at 5 hp)

Estimated equipment sizing for RAS pumps is shown in Table 6-10.

TABLE 6-10
Estimated RAS Pump Sizing – Central WWTP

Parameter	Value
Type	Submersible, Centrifugal with AFDs
Number	3
Operating Condition	2 duty, 1 standby
Capacity (each)	5,130 m^3/day (940 gpm)
Estimated Motor Power	16 kW (21 hp)

6.7 Disinfection

The proposed Central WWTP will include disinfection of treated effluent with sodium hypochlorite and sodium bisulfite. Estimated active chemical concentrations and dosage rates are shown in Table 6-11.

TABLE 6-11
Estimated Disinfection System Chemical Addition Rates – Central WWTP

Parameter	Value
Sodium Hypochlorite Solution	
Active Chemical Concentration	0.15 kg/L (1.26 lb/gal)
Estimated Dosage	6 mg/L
Sodium Bisulfite Solution	
Active Chemical Concentration	0.51 kg/L (4.25 lb/gal)
Estimated Dosage	3 mg/L

6.8 Sludge Treatment and Disposal

Sludge treatment and disposal for the proposed Central WWTP will include WAS thickening, aerobic digestion, and sludge dewatering. Estimated equipment sizing for WAS thickener feed pumping, the WAS thickener polymer system, WAS thickeners, and thickened WAS effluent pumping is shown in Tables 6-12 through 6-15. WAS thickener recycle flow will be conveyed by gravity to a central plant drain pump station, which then pumps to the plant headworks.

TABLE 6-12
Estimated WAS Thickener Feed Pump Sizing – Central WWTP

Parameter	Value
Type	Submersible, Centrifugal
Number	3
Operating Condition	2 duty, 1 standby
Capacity (each)	60.6 m^3/h (16,000 gph)
Estimated Motor Power	12 kW (15 hp)

TABLE 6-13
Estimated Polymer Doses for WAS Thickener – Central WWTP

Parameter	Value
Average Dosage	5 kg/dry tonne (10 lb/dry ton)
Peak Dosage	10 kg/dry tonne (20 lb/dry ton)

TABLE 6-14
Estimated WAS Thickener Sizing – Central WWTP

Parameter	Value
Type	Rotary Drum Thickener
Number	4
Operating Condition	3 duty, 1 standby
Operating Hours	16 h/day, 5 days/week
Projected Flow	41 m^3/h (10,670 gph)
Estimated Thickened Solids Concentration	30,000 mg/L
Estimated Motor Power	2.25 kW (3 hp)

TABLE 6-15
Estimated Thickened WAS Pump Sizing – Central WWTP

Parameter	Value
Type	Progressing Cavity
Number	3
Operating Condition	2 duty, 1 standby
Capacity (each)	15.4 m^3/hr (4,050 gph)
Estimated Motor Power	6 kW (8 hp)

Following WAS thickening, sludge will be pumped to the proposed aerobic digesters. Estimated aerobic digester sizing is presented in Table 6-16, and estimated aerobic digester blower sizing is presented in Table 6-17.

TABLE 6-16
Estimated Aerobic Digester Sizing – Central WWTP

Parameter	Value
Type	Aerobic
Number of Digesters	4
Digester Material	Concrete
Total Volume	6,700 m^3 (1.77 MG)
Estimated Dimensions (per train)	19.2 m by 19.2 m (63 ft by 63 ft)
Side Water Depth	4.6 m (15 ft)

TABLE 6-17
Estimated Aerobic Digester Blower Sizing – Central WWTP

Parameter	Value
Type	Multi-Stage Centrifugal
Number	6
Operating Condition	5 duty, 1 standby
Capacity (each)	2,890 N*m^3/h (1,700 scfm)
Estimated Motor Power	65 kW (87 hp)

Following aerobic digestion, digested sludge will be pumped to geotextile tubes for dewatering. The proposed dewatering system will include dewatering feed pumping, geotextile tubes, and draining of dewatered recycle flow to the central plant drain pump station. Estimated equipment sizing for dewatering feed pumping is shown in Table 6-18.

TABLE 6-18
Estimated Dewatering Feed Sludge Pump Sizing – Central WWTP

Parameter	Value
Type	Progressing Cavity
Number	3
Operating Condition	2 duty, 1 standby
Capacity (each)	0.61 m^3/min (160 gpm)
Estimated Motor Power	14 kW (18 hp)

Geotextile tubes will be used for sludge dewatering at the proposed Central WWTP. Geotextile tubes are filled with digested sludge, and water is allowed to pass through the geotextile fabric and return to the WWTP. Once a geotextile tube has been filled to the extent possible, the tube is taken out of service and allowed to finish dewatering. Once the tube has finished dewatering to the desired solids level, the tube is cut open, and the

contents are removed from the site. Approximately 23 geotextile tubes per year will be needed with the projected 2028 flow and loading characteristics, with about 5 geotextile tubes in service at any time. Table 6-19 shows equipment selection for dewatering.

TABLE 6-19
Estimated Geotextile Tube Quantities – Central WWTP

Parameter	Value
Type	Geotextile Tubes
Number	5 in-service

SECTION 7

Operational Aspects

Operation and maintenance (O&M) cost estimates, training requirements for O&M personnel, and sampling, testing, and monitoring requirements were developed for the proposed Central WWTP. These aspects are presented in this section of the report.

7.1 O&M Cost Estimate

An O&M cost estimate was conducted for the proposed Central WWTP based on estimated equipment sizing developed during computer-based process modeling activities. Several assumptions were made during the development of the O&M cost estimate for the proposed Central WWTP, including the following:

- Electricity costs were established at Jordan Dinars (JOD) 41 per 1,000 kilowatts (kW), or 0.06 U.S Dollars (USD) per kW.
- Based on magnitude of influent flow and complexity of operations, the proposed Central WWTP likely will be staffed by the following employees:
  - Plant Manager – 1 employee – monthly salary of JOD 600
  - Laboratory Manager – 1 employee – monthly salary of JOD 400
  - Maintenance Engineer – 1 employee – monthly salary of JOD 500
  - Plant Operators – 4 employees – monthly salary of JOD 200
  - Laborers – 12 employees – monthly salary of JOD 250
  - Administrator – 1 employee – monthly salary of JOD 300
  - Drivers – 4 employees – monthly salary of JOD 300

Table 7-1 presents the estimated annual O&M costs in Jordan Dinars for projected Stage 2 flow and loading conditions. Estimated annual O&M costs include those associated with both Stage 1 and Stage 2 projected flow and loading conditions.

TABLE 7-1
Annual O&M Cost Estimate – Central WWTP – Design Year = 2028, Average Day Design Flow = 6619 m^3/day

Item	Estimated Annual O&M Cost
Power (18,989 kW*h / day at 41 JD / 1000 kW*h)	JOD 284,000
Consumables and Supply	JOD 119,000
Maintenance (3 % of Capital)	JOD 145,000
Labor (24 employees at average salary = 284 JD / month)	JOD 82,000
Sludge Disposal	JOD 31,000
Rounded Total O&M	**JOD 661,000**

7.2 Training Requirements for O&M Personnel

The proposed Central WWTP includes more complex mechanical and electrical equipment and associated operational requirements than existing treatment plants in the area. Power costs for the proposed WWTP will be significantly higher than those for treatment plants using less complex treatment processes. Optimization of treatment processes and power use will be important in maintaining compliance with permitted effluent limits and minimizing operation and maintenance costs associated with the proposed Central WWTP.

In order to achieve optimal plant performance in the future, it is important that plant personnel have sufficient training and experience and are sufficient in number to maintain an optimal operating scheme at the treatment plant over a variety of flow and loading conditions. As noted above, 24 full-time staff members likely will be employed at the proposed Central WWTP. Recommended employee duties for the proposed Central WWTP are shown in Table 7-2.

TABLE 7-2
Recommended Employee Roles and Responsibilities – Proposed Central WWTP

Title	Role and Responsibility
Plant Manager	Responsible for oversight of plant operations, laboratory analyses, and preventive and emergency maintenance at the facility, including supervision of all other plant staff. Responsible for ensuring that optimum plant performance and compliance with regulatory standards are maintained at all times.
Laboratory Manager	.Coordinates sample collection from various portions of the facility, as well as analyses necessary to maintain optimum plant performance and compliance with applicable regulatory standards.
Maintenance Engineer	Maintains and updates preventive maintenance plans based on equipment manufacturer's recommendations to minimize unexpected equipment problems at the plant. Supervises laborers, providing quality control as laborers complete routine and emergency plant maintenance.
Plant Operators	Under the direction of the Plant Manager and with assistance from the Laboratory Manager, monitor plant performance and implement process changes as necessary to maintain efficient, thorough treatment of wastewater and residuals.
Plant Laborers	Assist Plant Operators and Maintenance Engineer in completing required maintenance necessary to maintain consistent plant performance. Also maintain upkeep of the plant property.
Administrator	Organizes and files laboratory records as required by regulations, tracks and routes incoming and outgoing correspondence.
Drivers	Transport screenings, grit, and plant residuals to disposal or land application sites as appropriate. Transport equipment to and from plant as necessary for maintenance.

As noted in Table 7-2, plant staff will develop preventive maintenance plans for the proposed Central WWTP based on equipment manufacturers' recommendations and will work to ensure readiness for emergency maintenance activities when the need arises. An adequate supply of spare parts is vital for smooth, continuous operation of the proposed

Central WWTP. The contract would allow for the provision of adequate spare parts as recommended by equipment manufacturers. Additionally, the contract would allow for the provision of equipment for monitoring and control of treatment processes, including laboratory equipment, online contaminant level monitors, and automatic sampling equipment.

As a portion of the proposed project, plant O&M personnel will obtain sufficient training for operation, routine maintenance procedures, and basic troubleshooting for equipment issues at the proposed Central WWTP. During the plant commissioning period, training by manufacturer's representatives will be provided for each major equipment group. A list of unit processes at the proposed Central WWTP, along with major equipment associated with each unit process, is presented in Table 7-3.

TABLE 7-3
Proposed Major Equipment by Unit Process – Central WWTP

Unit Process	Proposed Equipment
Influent Pumping	Submersible Pumps with AFDs
Screening	Package Spiral Screen
Grit Removal	Package Vortex Grit Removal
Biological Treatment	Submersible Mixers Axial-Flow Nitrified Recycle Pumps Multi-Stage Centrifugal Blowers
Secondary Clarification	Secondary Clarifier Drives Scum Pump
Disinfection	Sodium Hypochlorite and Sodium Bisulfite System
RAS/WAS Pump Station	Submersible Pumps with AFDs
WAS Thickening	Submersible Pumps for Thickener Feed Polymer Addition System Rotary Drum Thickeners Progressing Cavity Thickened Sludge Pumps
Aerobic Digestion	Multi-Stage Centrifugal Blowers
Dewatering	Progressing Cavity Dewatering Feed Pumps Polymer Addition System Geotextile Tubes

7.2.1 Sampling, Testing, and Monitoring Requirements

Monitoring, sampling, and testing activities to maintain process control and assess plant performance are vital to successful operation of the proposed Central WWTP and maintaining compliance with relevant Jordanian standards. Proposed sampling locations

and associated frequencies are presented in Table 7-4. Sampling frequencies for plant effluent are based on the Jordanian standard, while proposals for biosolids sampling are those recommended for biosolids handling for reuse in agriculture. Plant personnel may opt to increase sampling and testing frequency in response to plant upsets, general operational problems, etc.

TABLE 7-4
Proposed Monitoring, Sampling, and Testing Requirements

Location	Parameter	Type and Frequency of Measurement
Influent to Treatment Plant	Flow	Continuous
	Storm Flow	
	Cesspit / Septic tank contents	Continuous
	BOD	Daily composite
	COD	Daily composite
	TSS	Daily composite
	TKN	Daily composite
	NO_3-N (as nitrate)	Weekly
	NH_4-N (as nitrogen)	Weekly
	PO_4-P	Weekly
	pH	
	Temperature	
Plant Headworks	Quantity of Screenings	Daily
	Quantity of Grit	Daily
Process Reactors	Return Activated Sludge flow	Continuous
	Waste Activated Sludge flow	Continuous
Effluent from Final Clarifiers	BOD	
	TSS	
	TKN	
	NO_3-N (as nitrate)	
	NH_4-N (as nitrogen)	
Effluent from Treatment Plant	Flow	Continuous
	BOD	Daily composite
	COD	Daily composite
	TSS	Daily composite
	TKN	Daily composite
	NO_3-N (as nitrate)	Weekly

TABLE 7-4
Proposed Monitoring, Sampling, and Testing Requirements

Location	Parameter	Type and Frequency of Measurement
	NH_4-N (as nitrogen)	Weekly
Effluent from Treatment Plant (con't)	PO_4-P	Weekly
	SO_4	Monthly
	DO	Monthly
	Cl	Monthly
	pH	
	FOG	Weekly
	Color	Weekly
	MBAS	
	HCO_3	
	Nematodes	Every 2 weeks
	Total coliform	Every 2 weeks
	Fecal coliform	Every 2 weeks
	Metals (Iron, Manganese, Copper, Lead, Chromium, Cadmium, Nickel, Zinc, Arsenic, Mercury, Molybdenum, Selenium, Cobalt)	Monthly
Sludge to Geotextile Tubes	Flow	Continuous
	Dry solids content	
Sludge Disposed of from Site	Quantity	Daily
	Dry solids content	Daily
	Metals (Copper, Lead, Chromium, Cadmium, Nickel, and Zinc)	Every 2 weeks
	Fecal coliform	Every 2 weeks
	Salmonella	Every 2 weeks
	Nematodes	Every 2 weeks
	Viruses	Every 2 weeks

Other monitoring requirements include those associated with land used for biosolids disposal, should this be implemented for biosolids from the proposed Central WWTP. If biosolids land application is implemented, soil samples should be collected and analyzed

for metals and soil characteristics to ensure that compliance with the maximum accumulation limits presented in JS1145 is maintained. Annual soil sampling is proposed.

SECTION 8

Environmental Assessment

8.1 Introduction

In support of the people and Government of Jordan, the U.S. Trade and Development Agency (USTDA) is funding a study for a proposed wastewater collection, treatment, and effluent reuse project servicing 11 communities located near the city of Salt in Jordan. The technical and economic feasibility study for the proposed wastewater collection, treatment, and reuse is administered by the Water Authority of Jordan (WAJ). The project has a planning horizon of 20 years and as such will be designed to serve the needs of the communities in the study area up to the year 2028.

The feasibility study includes preparing a Preliminary Environmental Assessment (Preliminary EA) to address the environmental impacts that are likely to be generated from the construction and operation of the project. The terms of reference for preparing the Preliminary EA include identification of the key issues related to the existing environment in the areas that will be affected by the alternatives under consideration; identification of any areas of controversy at an early stage in project planning; and identification of the environmental impacts of the alternatives with a focus on the selected alternative. The terms of reference also include identifying any adverse effects that cannot be avoided if the proposed project is implemented, as well as identifying any irreversible or irretrievable commitment of resources that would be required.

8.2 Approach and Methodology

The general approach followed in conducting the Preliminary Environmental Assessment for the Salt Villages Wastewater Treatment Feasibility Study is based on the extensive experience of the environmental team in the project area and in conducting environmental assessments for similar projects in Jordan. The overall approach that has been adopted is aimed at establishing a sound basis for a comprehensive, detailed environmental impact assessment to be conducted in the future when the project moves forward towards detailed design.

Consultations with the public at this stage would not be necessary for the purpose of preparing the Preliminary EA. Nonetheless, consultations, discussions, and meetings with the key stakeholders, mainly governmental departments, conducted by the study team provided useful input that guided the Preliminary EA process. These included WAJ, Ministry of Water and Irrigation (MWI), Ministry of Environment, Department of Antiquities, and others.

Preparing the Preliminary EIA followed international standards and guidelines and adhered to local Jordanian requirements and regulations. The methodology is based on reviewing available information and project details; understanding the regulatory framework for environmental assessment; conducting field surveys and site investigations of the study area; assessing the likely impacts during project construction and operation; prescribing mitigation measures to minimize adverse impacts; and preparing an environmental management and monitoring plan.

Also, as part of the Preliminary EA, the Terms of Reference for a full environmental impact assessment were prepared to be used when the project proceeds to the next implementation stage.

8.3 Study Area

The study area originally comprised the following communities in the area: Yazedeyah, Za'atary, Hudeib, Al-Ermameen, Um Jozeh, Al-Waseyah, Al Seru, Ahleyah University, Daheyat Zohour, Daheyat Al-Zahra. However, the study area was later amended to add communities that are presently being served by Ein Elbasha Pump Station. These include: Ein Elbasha, Jalad, Al Sahloulieh, Um Njasa, Um Aldananeer, Um Sindianeh, Al Mudari, Um Alamad, Daam, Salouf, Wadi Al Naqa, and Zai. The study area is shown in Figure 8-1.

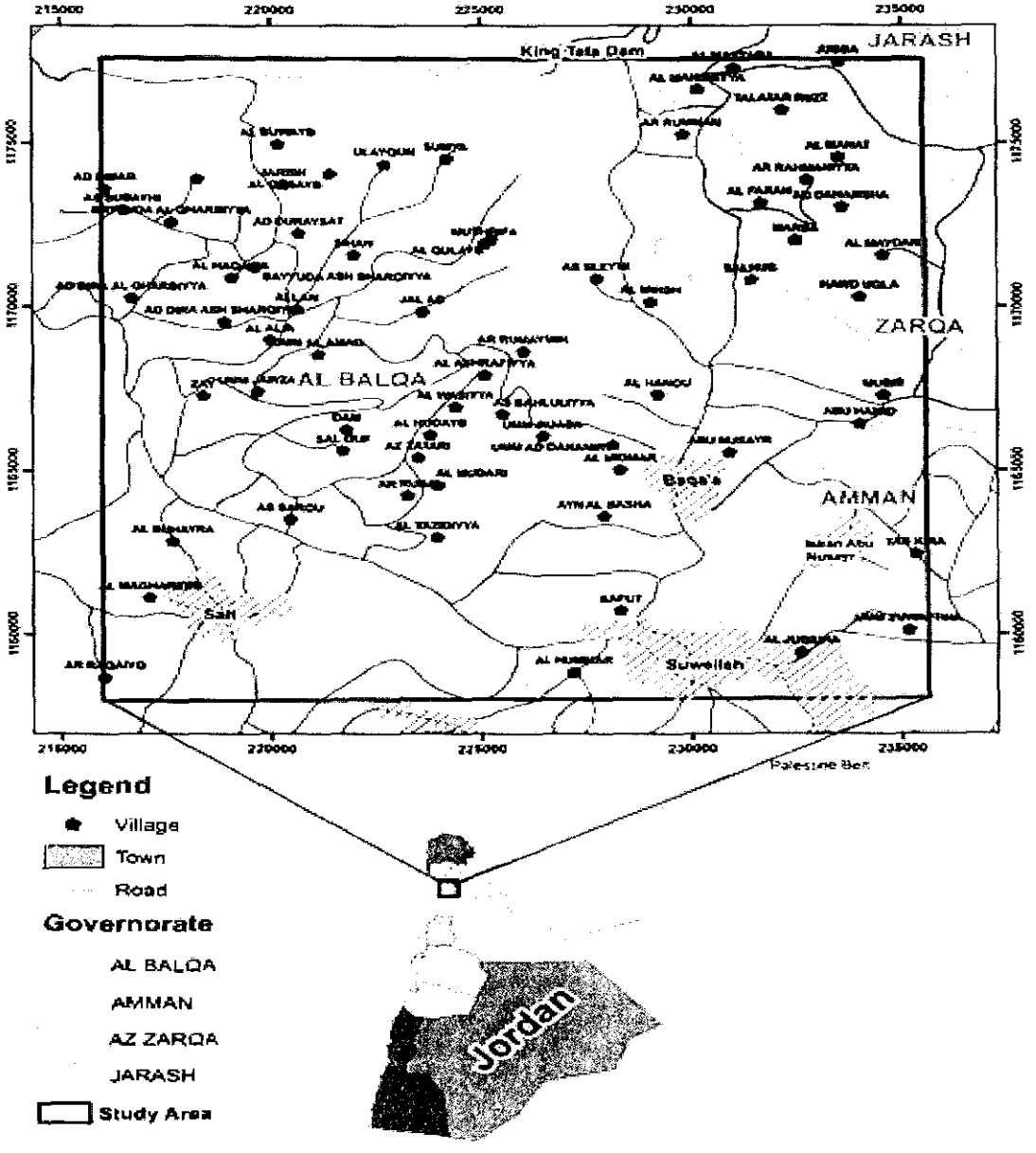

FIGURE 8-1
The Study Area

8.4 Proposed Project

The project is at the conceptual/early feasibility stage and involves providing a sewage collection network to serve the mostly scattered communities in the Salt area including providing treatment and reuse facilities. The WWTP is expected to begin operations in 2015 and is designed for a 20-year time horizon (i.e., until 2035) with a daily wastewater influent estimated at 6,500 m^3. As such, the WWTP can serve over 62,000 people in the earlier years of operation, increasing up to 82,000 people when the entire collection network has been completed. The WWTP will have the flexibility to be expanded in the future to accommodate a larger service area or by adding more communities that may develop in the future within the current service area.

8.5 Existing Conditions and Need for the Project

8.5.1 Existing Situation

Currently, no wastewater collection system is serving the communities living in the villages and towns of the study area. The population relies on cesspits and septic tanks to collect their wastewater. Septage is then allowed to infiltrate into the ground or is collected by septage tankers when the cesspits are filled. The cesspits are usually located in the backyard of residences, under the house itself or very close to the main roads. Common cesspits are made of concrete blocks with openings that allow percolation into the ground. Seepage from cesspits and septic tanks in the project area constitute a major health risk and is reported to be a source of groundwater contamination.

8.5.2 Need for the Project

The need is vital to provide the target villages and communities with a wastewater collection and treatment system to improve the living conditions and public health that is being adversely affected by the current wastewater collection and disposal practices. The proposed project will contribute to protecting the valuable and scarce surface and groundwater resources by reducing the negative impacts on these resources in the study area and even beyond. The project fits well into the strategic objectives of the Ministry of Water and Irrigation and the Water Authority of Jordan.

8.6 Project Alternatives

8.6.1 Service Area Alternatives

Wastewater generated currently from Ein Elbasha communities is collected and routed to Ein Elbasha Pump Station where it is pumped to the Baqa'a WWTP. As this pumping station is upstream of the study area, the project designers and WAJ found that there would be significant advantages to re-direct the wastewater flow from this pump station to the new treatment facility in the study area proposed by constructing a gravity trunk sewer from the pump station to the new WWTP. This will reduce the load on the existing Baqa'a treatment plant and will eliminate the Ein Elbasha Pump Station.

Toward the final stages of the feasibility study, WAJ requested considering two alternatives in connection with the Baqa'a wastewater flows: First is an alternative that is based on the construction of the WWTP to treat the projected flow for the selected study area in addition to the Baqa'a WWTP service area. The second alternative is based on the construction of the WWTP to treat the projected flow for the selected study area in addition to the wastewater flow of the Baqa'a refugee camp. WAJ requested these two alternatives in order to consider the service area up to the year 2035.

The selected alternative with all Baqa'a plant's WWTP flow would generate an average daily wastewater flow of about 32,000 m^3 while the selected alternative with Baqa'a Camp wastewater would generate an average daily wastewater flow of about 16,400 m^3. These two alternatives were studied and modeled on the basis of providing plant effluent contaminant concentrations that are 70 percent of the effluent contaminant concentration limits set by WAJ in order to provide a safety factor for the treatment process.

8.6.1.1 Wastewater Treatment Plants and Sewer Collection Network Alternatives

In cooperation with WAJ, the project designers initially assessed the feasibility of providing wastewater treatment to the selected communities by using one or more of the existing wastewater treatment facilities operating in nearby towns rather than constructing new wastewater treatment facilities. Three potential WWTPs that serve nearby towns were considered for use in treating wastewater collected from the study area. Analysis showed that none of the existing plants proved to constitute a reasonable alternative for wastewater treatment, either due to distance, terrain considerations, or current WWTP overload conditions.

Selection of alternatives related to the collection system was affected by the fact that the small towns, villages and communities of the study area are scattered across hilly, sometimes very steep terrain. WAJ has a general preference for conventional gravity sewer systems in order to avoid using a network of pump stations and force mains thus eliminating common problems associated with operating and maintaining pump stations.

One alternative considered was a completely conventional gravity sewer system, with one central WWTP. Another alternative consisted of a series of seven smaller satellite WWTPs that are distributed across the study area. Between these two extremes, two other options were considered that focused on overall trunk line reduction and/or overall satellite treatment plant reduction. Hence, four main alternatives have been developed for this project. For each of the four project alternatives, two primary wastewater treatment options were considered: 1) conventional wastewater treatment and 2) advanced wastewater treatment that is based on membrane bioreactor (MBR) treatment systems and which seemed to be a viable option because of having several advantages over conventional treatment alternatives.

The above alternatives were assessed for their environmental impacts including the location of each of the seven potential WWTPs and for conducting a comparative analysis. The project alternative with a centralized WWTP, one pump station, and conventional treatment was found to have the least adverse environmental impacts and was recommended as the preferred alternative.

8.7 Environmental Impacts

The overall net impact of the project on the environment in the area will be positive. Almost all of the adverse environmental impacts will occur during the construction phase and will be reversible, short-term, and easily mitigated through good construction practices. Fewer impacts, both in severity and spatial extent, are expected when the collection, treatment, and reuse systems are completed and operational.

Potential adverse impacts, mostly limited to the area immediately surrounding the construction of the sewer lines and WWTP, have been comprehensively identified and assessed. Specific mitigation measures were proposed to ensure minimizing potential negative impacts.

8.7.1 Positive Impacts

Providing the communities in the study area with wastewater collection, disposal, and reuse services will generate a number of positive impacts. It will provide a controlled method for the collection and treatment of wastewater and septage in the area and thereby replace the current primitive practices and their associated environmental and health impacts. As a public health project, it is expected that the overall environmental impacts will exceed any adverse impacts that are likely to be generated – mostly during the construction phase. The most significant positive impacts are improved public health and sanitation for the serviced communities, safeguarding the water resources in the study area and beyond, reduced wastewater disposal costs for the local population, increased employment opportunities, and resource conservation through using the treated WWTP effluent for irrigation. The project will also provide future opportunities for expanding wastewater collection, treatment, and effluent reuse for nearby towns and villages.

8.7.2 Impacts during the Construction Phase

Most of the adverse impacts expected from this project will be generated during the construction phase. The potentially significant adverse impacts during construction include air quality deterioration from earthworks and transportation, impacts from the disposal of excavated materials and construction waste, and health and safety hazards. The mitigation measures proposed include implementing various measures to minimize dust and noise impacts, using standard best construction practices, maintaining continuous coordination with the municipalities, properly designing and planning earthworks, developing a construction transport management plan, ensuring appropriate separation, handling and disposal of wastes, and implementing health and safety measures.

Construction sites for sewers and WWTPs will be at risk from erosion. However, this risk can be minimized by implementing standard erosion/runoff control measures especially if construction is to take place during winter.

The main archaeological sites in the study area were identified in detail and mapped. The extent to which direct impacts are expected was presented in the Preliminary EA for each individual site of cultural heritage. However, most of these sites are not in proximity to the proposed WWTPs or pumping stations. Field investigation revealed that no significant direct impacts are foreseen for known archaeological sites within the study area. However,

note that excavations in connection with constructing the sewer pipes or building the WWTP may yield new archaeological findings as the study area is known to have supported early settlements (see Figure 8-2). Salvage archaeological excavations may be needed and can be conducted in parallel with excavation. New finds are highly likely at Um Jozeh village (the Tell), currently partly occupied by village houses.

FIGURE 8-2
Ruins of a Roman Mausoleum (left) and an Umayad Mosque in Jalad

The ecology of the project area is already degraded as a result of decades of human intervention and intensive grazing. The ecological characteristics as well as biodiversity in general will be slightly affected by the construction activities.

Loss of habitats, expected on a very small scale, will be confined to the areas along the sewer routes and the WWTP(s) site. Increased accessibility to Yazedeyah and Zatari may cause some pressures on their natural features, particularly oak trees. No fragmentation of habitats will occur from the construction of the conveyance system or the Central WWTP in Wadi Ermameen. The potential damage or removal of vegetation may reduce the density of floral species, especially in Yazedeyah area.

Minimal impacts are expected on the mammalian and reptilian species within the study site during construction. Construction in flat areas at Zatari, Jalad, and Ermameen will have the potential to cause loss of open habitats, which are important for birds. Any destruction of woods on the rocky slopes, such as in Yazedeyah, will lead to decreasing the numbers of breeding species that currently rely on this habitat.

The mitigation measures proposed and presented in the Preliminary EA for the construction phase address all likely construction activities. Their proper and timely implementation will ensure that all residual adverse impacts are minimized.

8.7.3 Impacts During the Operating Phase

The proposed wastewater collection, treatment, and reuse project for the target villages and communities in Salt are expected to have few and limited adverse environmental impacts during the operational phase. These impacts may be generated from the normal operation

and maintenance activities at the WWTP; incidents involving leaks, spills, and overflows; treated effluent reuse activities; and regular maintenance of the pump stations and collection sewers.

Potential adverse impacts during operation include odor emissions, pollution from inappropriate treatment and reuse/disposal of sludge, an increase in nuisance species including the black rat and house mouse, occupational health and safety hazards for operators, and potential occurrence of parasitic diseases. Seepage and/or leaks from the lined units at the WWTP could also occur and negatively affect groundwater aquifers.

Downwind from the Central WWTP are a few communities that can be affected by foul odor propagation. Al Salihi (about 1.5 km) and Al Minish (about 2 km) can be affected by odor when the winds are westerly. North-northeasterly winds can carry odor to Ermameen, which is about 2 km away. The location of the Central WWTP, surrounded by hills and higher ground on all sides, affords natural protection against odor dispersion toward the surrounding areas.

Mitigation measures proposed include odor minimization in the WWTP design, conservative design with high operational flexibility, management of disease vectors and pest control, and application of standard health and safety procedures. Groundwater monitoring will help protect the water resources in the immediate vicinity of the Central WWTP. This and other mitigation measures will also ensure rapid remediation of any adverse effects on the water resources from WWTP operation.

8.8 Environmental Management and Monitoring

An environmental management and monitoring plan (EMMP) was prepared to ensure environmentally sound project implementation, monitoring, and follow-up. The EMMP describes the environmental protection and mitigation measures to be applied during project construction and operation to minimize potential adverse impacts and to achieve project objectives. It includes management practices, environmental monitoring, and specifies the timing required for implementation and/or the frequency suggested for monitoring the relevant indicators. The EMMP outlines the responsibilities and timelines assigned for implementing each mitigation measure.

The EMMP must be continuously revisited by the project team, construction contractor, WWTP operator, municipalities, and other concerned stakeholders to ensure that the EMMP is being implemented and that it is updated and adjusted where and when necessary to remain effective in minimizing potential adverse impacts.

SECTION 9

Water Reuse Opportunities

9.1 Characteristics of the Study Area

9.1.1 Climate

The catchment area of the project is located in the northern highland agro-climatic zone. The weather in this agro-climatic zone is dry and mild in summer and wet and cold in winter. The mean annual precipitation is about 550 mm. The average daily temperatures range between 4.3°C in winter and 29.5°C in summer. Further information on the climatic condition of the project area can be obtained from the weather data of Salt meteorological station, which represents the climatic condition of the project area.

9.1.2 Current Agricultural Practices

Rain-fed agriculture is dominant in the catchment. Most of the catchment is planted with olive trees with no or minimum irrigation (supplemental irrigation during summer). A large portion of the catchment is still covered by forest trees, mainly Oak (Figures 9-1 and 9-2).

FIGURE 9-1
Area Planted with Rain-fed Olive Trees

FIGURE 9-2
Area Covered by Forest Trees

Small farms planted with vegetables like squash and eggplant crops under drip irrigation were found in some wadis in the catchment as shown in Figures 9-3 and 9-4.

FIGURE 9-3
Vegetable Crops Planted Under Drip Irrigation

FIGURE 9-4
Farm Planted With Squash Crop Under Drip Irrigation

9.1.3 Source of Irrigation Water

Groundwater is the main source of water for most farms in the catchment. However, the main source of water for the farms along the Rememin wadi and the Zai wadi is surface water because a permanent water flow originates from springs located upstream of these two wadis.

9.2 Irrigation Water Demand

9.2.1 The Reference Crop Evapotranspiration (ETo)

The calculation of reference crop evapotranspiration (ETo) is frequently performed by means of the so-called Class A Evaporation Pan method. The procedure followed to calculate the ETo values is by correlating them with measured data on evaporation as obtained from Class A Evaporation Pan. Such data reflect the integrated effect of solar radiation, wind, and relative humidity on evaporation from an open water surface. Because the siting and the immediate environment of the pan contribute to the rate of evaporation, it is important that the operation and maintenance of the pan are conducted in a strictly standardized manner and that the results are used only in a very similar environment. If these conditions do not apply the use of suitable correction, other factors should be considered.

Depending on the prevalent conditions as far as relative humidity, wind, and pan location are concerned, the relationship between measured pan evaporation (Epan) and local ETo is indicated by pan-coefficient (Kp) using the following formula:

$$ETo = Epan * Kp$$

Where: ETo = Reference crop evapotranspiration
Epan = Measured pan evaporation
Kp = The pan coefficient

Calculations performed for the catchment area are presented in Table 9-1 for the mean monthly reference crop evapotranspiration.

TABLE 9-1
Mean Monthly Reference Crop Evapotranspiration (ETo) Calculations for Catchment Area

Parameters	Jan	Feb	Mar	Apr	May	Jun	Jul	Aug	Sep	Oct	Nov	Dec
Epan	74.4	90.5	143.2	199.4	300.1	358.6	409.0	349.1	284.8	214.5	132.7	87.2
Kp	0.7	0.7	0.7	0.6	0.6	0.6	0.6	0.6	0.6	0.6	0.6	0.7
ETo	52.1	63.3	100.2	119.7	180.0	215.1	245.4	209.5	170.9	128.7	79.6	61.0

The Epan evaporation data shown in the table were collected from the Salt meteorological station, which is the closest station to the study catchment. The study catchment is located in the northern highland (Kufranga area) agro-climatic zone of Jordan, presented in Figure 9-5.

9.2.2 The Net Water Requirement for a Certain Crop

The integrated effect of different climatic factors is reflected in the ETo values. To find the effect of the crop characteristics on the net crop water requirement, the ETo should be multiplied by a crop coefficient (Kc) that relates to the evapotranspiration of disease-free crop grown in large fields under optimum soil and water conditions and achieving full production potential in a given growing environment.

The value of crop coefficient varies with the crop, the time of planting or sowing, the stage of crop growth, the growing season, and the prevailing weather conditions.

Because the agricultural practices and the type of crops and locations are varied from year to year in the area surrounding the potential locations of the WWTP, a recommendation for this study is made is to adopt a uniform crop coefficient of 1.0, that will cover mixed crops and all growth stages prevalent in that area.

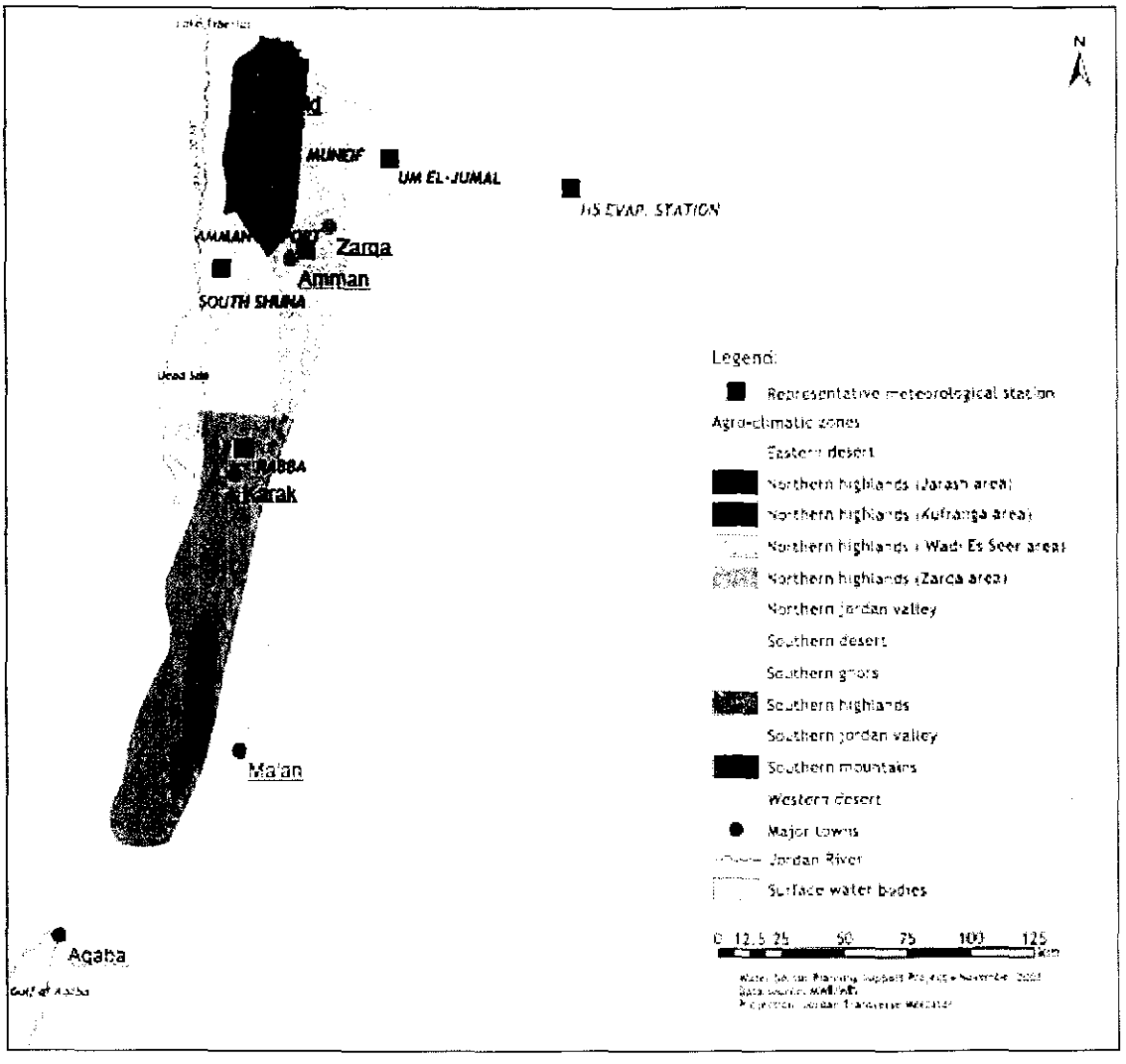

FIGURE 9-5
Agro-climatic Zones of Jordan

9.3 Effluent Water Balance

As shown in Figure 9-6, the available effluent water for reuse is very high during winter season compared to the gross irrigation requirement. The reason for the difference is that the effective rainfall during the months of December, January, and February (Figure 9-7) is more than the crop water requirement (i.e., no irrigation is needed during this period). Thus, the effluent water during these months should be discharged to wadis or maintained in a large storage pond.

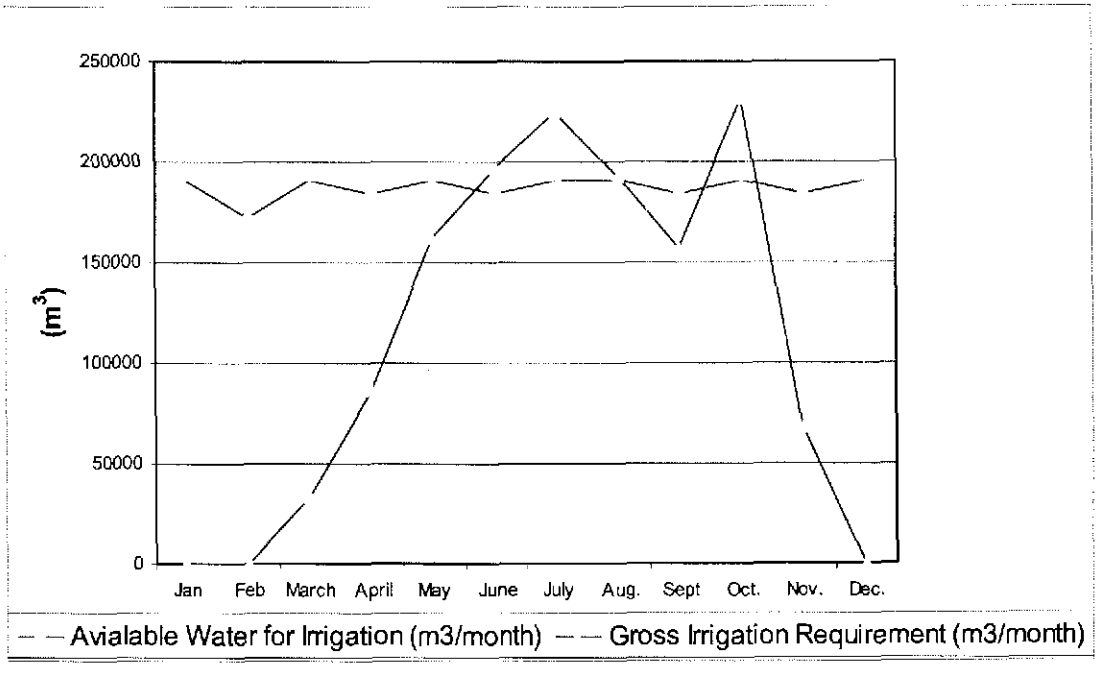

FIGURE 9-6
Monthly Gross Irrigation Requirement and Available
Effluent Water for Irrigation for the Year 2028

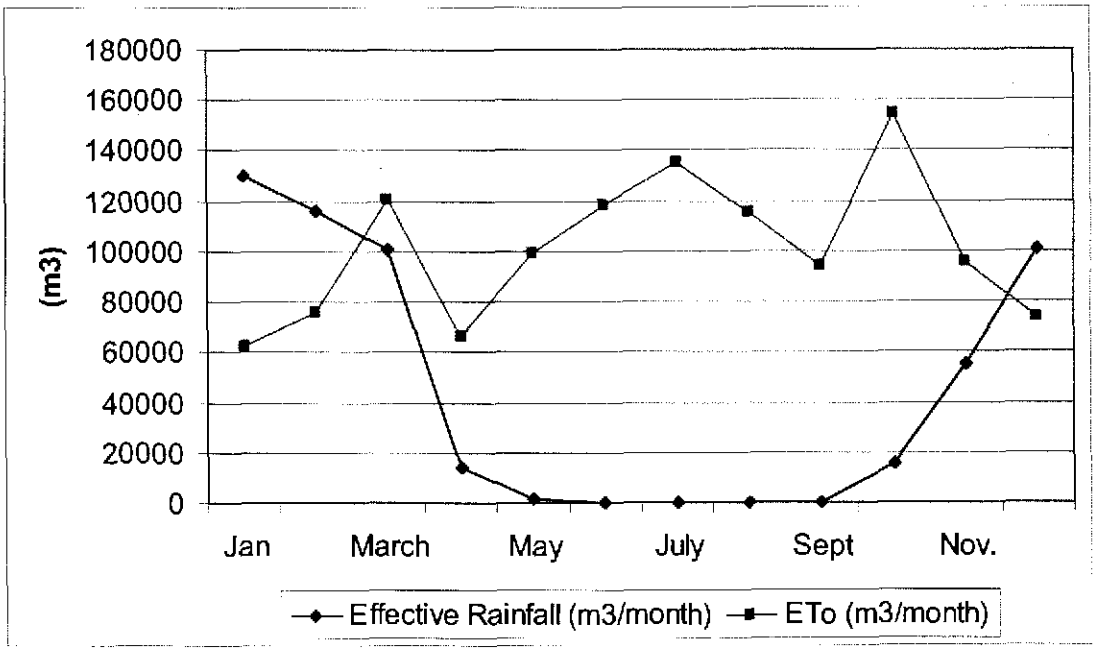

FIGURE 9-7
Monthly Effective Rainfall Amount Versus
Evapotranspiration Values Throughout the Year

9.4 Recommended Reuse Option

Because of the topographic nature of the project catchment, which is mainly mountainous with narrow wadi bed, difficulty lies in finding enough area around the WWTP site that can consume whole quantities of effluent water for crop production. Furthermore, no need exists for irrigation during most of the winter season because the crop water demand is less than the effective rainfall in that region.

The selected alternative, as mentioned earlier in this report, is one Central WWTP serving the entire catchment located downstream of the study catchment and about 5 km upstream of King Talal Dam. The best way of water reuse for this WWTP is to link it with the reuse scheme of King Talal Dam by discharging the effluent water to King Talal Dam via a water conveyance pipe to avoid any contamination to the fresh water currently running in the wadi. Worth mentioning here is that in addition to annual flood water the source of water in this dam is mainly effluent water from other treatment plants like Al-Samra WWTP and Balqa'a WWTP. All of the water collected in this dam is currently used for agricultural production in the Jordan valley.

The small quantity of effluent water produced by this plant can be used for irrigation in green landscape areas within the treatment plant site.

SECTION 10

Project Costs

On the basis of the computer-based wastewater process design model developed to estimate sizing of the proposed Central WWTP, a preliminary construction cost estimate was developed for this proposed facility. Estimated construction costs are presented in this section of the report, with subsections for estimated construction cost and net present value analysis. O&M cost estimates were presented earlier in Section 7 of this report.

10.1 Wastewater Treatment Facility Construction Cost Estimate

Several assumptions were made during the development of the construction cost estimate for the proposed Central WWTP, including the following:

- Markups were included for the following:
  - Contractor Overhead and Profit (17 percent)
  - Contractor Mobilization/Demobilization (3 percent)
  - Contractor Bonds and Insurance (2.7 percent)
  - Contingency (20 percent)
- Taxes were not included.
- From previous discussions, approximately 50,000 square meters were assumed to be available for purchase at the proposed Central WWTP location for an estimated cost of JOD 1,500,000. The site can accommodate future expansion associated with Baqa'a Camp wastewater diversion and Baqa'a WWTP closure.

The estimated construction cost for the proposed Central WWTP is presented in Table 10-1.

- Major assumptions include the following:
- No pile foundations are required.
- No rock excavation or blasting is required.
- The estimate does not include costs for groundwater dewatering.
- The majority of the excavated material may be used as suitable fill material.

TABLE 10-1
Estimated Construction Cost and Land Acquisition Cost – Central WWTP

Description	Value	Units
Raw Capital Cost	JOD 5,605,000	
Markups		
Contractor Overhead & Profit	JOD 953,000	At 17%
Contractor Mobilization / Demobilization	JOD 169,000	At 3%
Contractor Bonds / Insurance	JOD 152,000	At 2.7%
Contingency	JOD 1,121,000	At 20%
Subtotal with Markups	JOD 8,000,000	
Estimated Land Acquisition Cost	JOD 1,500,000	
Total Estimated Construction Cost	**JOD 9,500,000**	

10.2 Net Present Value Analysis

A 20-year net present value (NPV) analysis of the proposed Central WWTP was conducted for this report. An annual discount rate of 6.0 percent was used in development of the NPV, along with an annual inflation rate of 3.0 percent. Estimated O&M costs used for the NPV are those for Stage 2, presented earlier in Table 7-1. Timing of Stage 2 construction is not known, and use of estimated Stage 2 O&M costs in the NPV analysis ensures overall conservatism in cost estimation. Table 10-2 presents the results of the NPV analysis for the proposed Central WWTP.

TABLE 10-2
Estimated 20-Year Net Present Value – Central WWTP

Description	Estimated Value
Total Estimated Construction Cost	JOD 9,500,000
NPV of Annual O&M (Stage 2)	JOD 9,914,000
Total 20-Year NPV	**JOD 19,414,000**

10.3 Cost Estimate of Wastewater Collection System

All of the communities located within the catchment area of Wadi Ermameen are served by four sewer trunk lines (Line A, Line B, Line C, and Line D) located along the main wadis (Wadi Um Edananeer, Wadi Al-Yazediah, Wadi Al-Marba'a, and Wadi Al-Haramieh, respectively) as shown previously in Figure 5-1.

Table 10-3 shows the unit rates for sewer line construction obtained from similar construction projects. The unit costs are used to estimate the construction costs of the wastewater collection network.

TABLE 10-3
Unit Rates of Sewer Lines Construction

No.	Item Description	Unit Rate	Unit
1	**Gravity Sewer Lines**[a]		
2	Concrete pipe 150 mm Diam.	70	JD/m
3	Concrete pipe 200 mm Diam.	140	JD/m
4	Concrete pipe 300 mm Diam.	200	JD/m
5	Concrete pipe 400 mm Diam.(wadi)	300	JD/m
6	Concrete pipe 500 mm Diam.(Wadi)	350	JD/m
7	Concrete pipe 600 mm Diam.(Wadi)	390	JD/m

[a] Sewer line costs include construction of manholes.

The construction stages of the sewer collection network with its sewer trunk lines is subdivided into two stages as shown in Table 10-4.

Communities of the catchment area are grouped into two groups such that two construction stages are adopted where stage 1 has the lower construction average cost per capita of (1091JD/capita) and will take first priority, while stage 2 has the higher construction average cost per capita of (1351 JD/capita).

The total construction cost for all sewer network components, shown in Table 10-4 is 36,112,992 JD.

TABLE 10-4
Construction Stages of Sewer Network

Stage No.	Comm. No.	Community	Pipe Diam 150 mm	Total Cost JD	Pipe Diam 200 mm	Total Cost JD	Pipe Diam 300 mm	Total Cost JD	Pipe Diam 400 mm	Total Cost JD	Pipe Diam 500 mm	Total Cost JD	Pipe Diam 600 mm	Total Cost JD	Grand Cost JD
	1	West Ain El-Basha Trunk Line							-				4065	1585350	1,585,350
	2	AL-ERMAMEEN	4102	287115	11052	1547327	-		720	216000			2644	1031130	3,081,572
	3	UM NJASAH	1706	119391	9859	1380260	-		-		-		-		1,499,651
	4	AL-MUDARI	1725	120778	7874	1102356	-		-		-		-		1,223,144
	5	YAZEDEYAH	2544	178073	10496	1469438	-		-		-		-		1,647,511
	6	SERU	4510	315709	18748	2624704	4196	839200	4632	1389600	-		-		5,169,213
	7	DAHYET AL-ZOHOUR	2038	142651	20877	2922779	422	84400	-		-		-		3,149,830
	8	ZA'ATARY	2939	205707	2093	293083	-		-		-		-		498,791
	9	ZAI	6914	483966	20378	2852905	3261	652200	-		-		-		3,989,071
	10	UM JOZEH	5915	414082	14110	1975407	6435	1286985	-		6098	2134300	-		5,810,773
	11	UM AL-AMAD	2734	191410	9937	1391194	-		-		-		-		1,582,604
Stage-1		Sub Total	35127	2458882	125425	17559463	14314	2862785	5352	1605600	6098	2134300	6709	2616480	29,237,510
Stage-2	12	UM SINDIANEH	468	32755	1497	209641	-		-				-		242396
	13	SAHLOOLIAH	829	58042	2010	281397	-				-		-		339439
	14	AL-WASEYAH	726	50787	5117	716382	-		-		-		-		767168
	15	AL-HUDAIB	713	49933	5022	703121	-		-		-		-		753054
	16	DA'IM	1088	76180	2545	356275	-		-		-		-		432455
	17	SALOUF	511	35770	7554	1057560	4101	820157	-		-		-		1913487
	18	Wadi Al-Naqa	500	35000	3720	520800									555800
	19	DAHYET AL-ZAHRA'A	826	57828	4891	684739		0	-			0	-		742567
	20	JALAD	1492	104454	7319	1024662	-		-			0	-		1129116
		Sub Total	7154	500749	39676	5554576	4101	820157	0	0	0	0	0	0	6,875,482

The following issues were considered in construction phasing:

1. Construction cost of sewer network and the required length of trunk line to serve each community have been calculated, hence construction cost per capita for each community is calculated.
2. The geographical location of each community is considered such that to serve that community all parts of the downstream sewer trunk line should be constructed first.
3. Communities with small population size will be served in the second stage.
4. Future development of Al Seru, Ahleyah University, and Daheyat Zuhour.

Table 10-5 shows total sewer network lengths for each stage, with the estimated construction cost for each pipe diameter.

TABLE 10-5
Summary of Construction Stage of Sewer Network

Stage No.	Stage-1		Stage-2	
Pipe Diam. (mm)	Length (m)	Total Cost (JD)	Length (m)	Total Cost (JD)
150	35127	2458882	7154	500749
200	125425	17559463	39676	5554576
300	14314	2862785	4101	820157
400	5352	1605600	0	0
500	6098	2134300	0	0
600	6709	2616480	0	0
	193,024	**29,237,510**	**50,930**	**6,875,482**

Figure 10-1 shows the boundary of each construction stage.

SALT VILLAGE
WASTEWATER TREATMENT
FIGURE 10-1

10.4 Influent Central Pumping Station

Table 10-6 shows the estimated construction cost of the influent central pumping station with its force main of 400-mm-diameter pressure pipe, which will be built within the wastewater treatment site.

TABLE 10-6
Cost Estimate of Influent Pumping Station

Option No.	Pumping Stations	P.S Capital Cost JD	Land Acquisition Cost JD	Force Main Cost JD	Subtotal Cost JD	Total Cost/Option JD
1A	Central P.S	650,000	68000	108000	826,000	826,000

10.5 Treated Effluent Pipeline

The treated effluent pipe line with a 600-mm diameter and a 2,500-m length will be built to transfer the treated effluent from the treatment plan site along Wadi Ermmeen then to King Talal Storage Dam. Table 10-7 presents the estimated construction cost of the treated effluent gravity pipe.

TABLE 10-7
Cost Estimate of Effluent Pipe

Pipe Diam. (mm)	Length (m)	Total Cost (JD)
600	2,500	975,000

SECTION 11

Project Implementation and Staging

11.1 Recommended Contract Strategy

In order to implement this project in a manner that is financially feasible, several different contract packages can be procured. Additional discussions with WAJ are required to allow for implementation in more than two stages as a means of rendering the project realistic. For Stage 1, two contracts are proposed: a combined civil, mechanical, and electrical contract for the WWTP and the second contract for the sewage network. If the overall implementation is divided into more stages, similar contract strategies could be adopted for the second stage.

11.1.1 Potential Financing Sources

This study was funded through USTDA, and as such, the project team has worked very closely with WAJ to establish a prioritization for this much-needed project in providing wastewater facilities to an area that currently has no service. Meetings have been conducted with the U.S. Agency for International Development (USAID) in Amman, Jordan, as well as with USAID administrative staff in Washington, DC. Consequently, USAID is considered the primary source for potential future funding of this project. However, other funding sources may be applicable as well and should be investigated as this project moves forward. Among the primary funding sources for this project are the following:

- USAID
- World Bank
- Arab Bank
- Kuwaiti National Fund

11.1.2 US Sources of Supply

As part of the administrative requirements for completing a USTDA-funded study, U.S.-based suppliers that could contribute to the project in the subsequent stages of design and construction are required to be identified. Because of numerous items of equipment associated with a treatment plant, the list provided in Table 11-1, on the following pages, is quite extensive. However, it illustrates that the potential for a continued partnership between the United States and Jordan can provide significant benefits to both countries from both an environmental and economic perspective.

TABLE 11-1
Equipment Vendors

Equipment Description	Estimated Capacity	Estimated Power (hp)	Vendor A	Vendor B	Vendor C
Influent Pumps - 4 submersible with AFDs	1,630 gpm (each)	53 hp	Goulds	Fairbanks Morse	Yeomans
			Goulds Pumps, ITT Corporation, Residential & Commercial Water	Fairbanks Morse	Yeomans
			2881 East Bayard Street	3601 Fairbanks Avenue	PO Box 6620
			Seneca Falls NY 13148	Kansas City KS 66106	Aurora IL 60598-0620
			Phone: (315) 568-7123	Phone: (913) 371-5000	Phone: (630) 236-5500
			Fax: No fax number given	Fax: (913) 748-4025	Fax: (630) 236-5511
Package Spiral Screen	7.0 mgd	5 hp	Lakeside	Hycor	
Package Vortex Grit Removal	7.0 mgd	5 hp	Lakeside Equipment Company	Parkson Florida	
			PO Box 8448	PO Box 408399	
			Bartlett IL 60103	Fort Lauderdale FL 33340-8399	
			Phone: (630) 837-5640	Phone: (954) 974-6610	
			Fax: (630) 837-5647	Fax: (954) 974-6182	
Nitrified Recycle Pumps - 3 submersible, axial flow with AFDs	3,900 gpm (each)	17 hp	ITT Flygt		
			Flygt Products		
			PO Box 1004		
			Trumbull CT 06611-0943		
			Phone: (203) 380-4700		
			Fax: (203) 380-4705		

TABLE 11-1
Equipment Vendors

Equipment Description	Estimated Capacity	Estimated Power (hp)	Vendor A	Vendor B	Vendor C
Submersible Mixers - 6 total	N/A	15 hp	ITT Flygt Flygt Products PO Box 1004 Trumbull CT 06611-0943 Phone: (203) 380-4700 Fax: (203) 380-4705	Philadelphia Mixers Philadelphia Mixing Solutions 1221 East Main Street Palmyra PA 17078 Phone: (800) 956-4937 Fax: (717) 832-1740	Chemineer (platform-mounted) Chemineer, Inc. PO Box 1123 Dayton OH 45401 Phone: (800) 643-0641 Fax: (937) 454-3230
Process Reactor Blowers - 4 multi-stage centrifugal	3,320 scfm (each)	212 hp	Gardner Denver Gardner Denver, Inc. 1800 Gardner Expressway Quincy IL 62305 Phone: (217) 222-5400 Fax: (217) 228-8243	Spencer Turbine The Spencer Turbine Company 600 Day Hill Road Windsor CT 06095 Phone: (860) 688-8361 Fax: (860) 688-0098	
Secondary Clarifier Drive - for 60' diameter clarifiers	N/A		Envirex Envirex 1901 South Prairie Avenue Waukesha WI 53189 Phone: (800) 524-6324 Fax: (262) 547-4120	Walker Process Walker Process Equipment 840 North Russell Avenue Aurora IL 60506 Phone: (800) 992-5537 Fax: (630) 892-7951	WesTech WesTech Engineering, Inc. 3625 South West Temple Salt Lake City UT 84115 Phone: (801) 265-1000 Fax: (801) 265-1080

TABLE 11-1
Equipment Vendors

Equipment Description	Estimated Capacity	Estimated Power (hp)	Vendor A	Vendor B	Vendor C
Secondary Clarifier Scum Pump	375 gpm	5 hp	Vaughan Chopper Pumps Vaughan Company, Inc. 364 Monte-Elma Road Montesano WA 98563 Phone: (360) 249-4042 Fax: (360) 249-6155	ITT Flygt Flygt Products PO Box 1004 Trumbull CT 06611-0943 Phone: (203) 380-4700 Fax: (203) 380-4705	
RAS Pumps - 3 submersible, centrifugal with AFDs	940 gpm (each)	21 hp	Goulds Goulds Pumps, ITT Corporation, Residential & Commercial Water 2881 East Bayard Street Seneca Falls NY 13148 Phone: (315) 568-7123 Fax: No fax number given	Fairbanks Morse Fairbanks Morse 3601 Fairbanks Avenue Kansas City KS 66106 Phone: (913) 371-5000 Fax: (913) 748-4025	Yeomans Yeomans PO Box 6620 Aurora IL 60598-0620 Phone: (630) 236-5500 Fax: (630) 236-5511
Disinfection - Sodium Hypochlorite and Sodium Bisulfite Tanks					
Disinfection - Sodium Hypochlorite and Sodium Bisulfite Metering Pumps			Pulsafeeder Pulsafeeder 2883 Brighton-Henrietta Townline Road	Milton Roy Milton Roy USA 201 Ivyland Road	ProMinent ProMinent Fluid Controls, Inc. 136 Industry Drive, R.I.D.C. Park West

TABLE 11-1
Equipment Vendors

Equipment Description	Estimated Capacity	Estimated Power (hp)	Vendor A	Vendor B	Vendor C
Disinfection - Sodium Hypochlorite and Sodium Bisulfite Metering Pumps (con't)			Rochester NY 14623 Phone: (585) 292-8000 Fax: (585) 424-5619	Ivyland PA 18974 Phone: (215) 441-0800 Fax: (215) 441-8620	Pittsburgh PA 15275 Phone: (412) 787-2484 Fax: (412) 787-0704
WAS Thickener Feed Pumps - 3 submersible, centrifugal	16,000 gph (each)	15 hp	Goulds Goulds Pumps, ITT Corporation, Residential & Commercial Water 2881 East Bayard Street Seneca Falls NY 13148 Phone: (315) 568-7123 Fax: No fax number given	Fairbanks Morse Fairbanks Morse 3601 Fairbanks Avenue Kansas City KS 66106 Phone: (913) 371-5000 Fax: (913) 748-4025	Yeomans Yeomans PO Box 6620 Aurora IL 60598-0620 Phone: (630) 236-5500 Fax: (630) 236-5511
Polymer System for WAS Thickener			Polyblend Siemens Water Technologies PO Box 389 Bradley IL 60915 Phone: (815) 932-8154 Fax: (815) 939-9845	Norchem Industries 8910 West 192nd Street Mokena IL 60448 Phone: (708) 478-4777 Fax: (708) 478-4776	Dynablend Fluid Dynamics (former Semblex system) PO Box 576 Landsdale PA 19446 Phone: (888) 363-7886 Fax: (800) 255-4017
WAS Thickener - 4 Rotary Drum Thickeners	10,670 gph (total)	3 hp	Hycor	Vulcan	

TABLE 11-1
Equipment Vendors

Equipment Description	Estimated Capacity	Estimated Power (hp)	Vendor A	Vendor B	Vendor C
WAS Thickener - 4 Rotary Drum Thickeners (con't)			Parkson Florida PO Box 408399 Fort Lauderdale FL 33340-8399 Phone: (954) 974-6610 Fax: (954) 974-6182	Vulcan Industries, Inc. PO Box 390 Missouri Valley IA 51555 Phone: (712) 642-2755 Fax: (712) 642-4256	
Thickened WAS Pumps - 3 progressing cavity	4,050 gph (each)	8 hp	Moyno Moyno, Inc. 1895 West Jefferson Springfield OH 45506 Phone: (937) 327-3111 Fax: (937) 327-3177	Monoflo Monoflo NOV 9700 West Gulf Bank Houston TX 77040 Phone: (281) 272-7700 Fax: (281) 272-7792	
Aerobic Digester Blowers - 6 multi-stage centrifugal	1,700 scfm (each)	87 hp	Gardner Denver Gardner Denver, Inc. 1800 Gardner Expressway Quincy IL 62305 Phone: (217) 222-5400 Fax: (217) 228-8243	Spencer Turbine The Spencer Turbine Company 600 Day Hill Road Windsor CT 06095 Phone: (860) 688-8361 Fax: (860) 688-0098	
Dewatering Feed Pumps - 3 progressing cavity	160 gpm (each)	18 hp	Moyno Moyno, Inc.	Monoflo Monoflo NOV	

TABLE 11-1
Equipment Vendors

Equipment Description	Estimated Capacity	Estimated Power (hp)	Vendor A	Vendor B	Vendor C
Dewatering Feed Pumps - 3 progressing cavity (con't)			1895 West Jefferson Springfield OH 45506 Phone: (937) 327-3111 Fax: (937) 327-3177	9700 West Gulf Bank Houston TX 77040 Phone: (281) 272-7700 Fax: (281) 272-7792	
Geotextile Tubes			Tencate Tencate Geotube 3527 Telfair Way NE Atlanta GA 30319 Phone: (404) 255-7435 Fax: (706) 693-1896	US Fabrics, Inc. US Fabrics, Inc. 3904 Virginia Avenue Cincinnati OH 45227 Phone: (800) 518-2290 Fax: (513) 271-4420	GSI Geosynthetics, Inc. GSI Geosynthetics, Inc. W239 N248 Pewaukee Road Waukesha WI 53188 Phone: (800) 444-5523 Fax: (262) 524-7961
Polymer System for Dewatering			Polyblend Siemens Water Technologies PO Box 389 Bradley IL 60915 Phone: (815) 932-8154 Fax: (815) 939-9845	Norchem Industries 8910 West 192nd Street Mokena IL 60448 Phone: (708) 478-4777 Fax: (708) 478-4776	Dynablend Fluid Dynamics (former Semblex system) PO Box 576 Landsdale PA 19446 Phone: (888) 363-7886 Fax: (800) 255-4017

SECTION 12

Economic, Financial, and Socioeconomic Analysis of the Project

This section provides a preliminary socioeconomic evaluation of the selected alternative for treatment of Salt area wastewaters. Also, an economic analysis of the influence of various tariffs, costs of O&M, and revenues from wastewater tariffs were all conducted to evaluate the overall operational economy of the plant.

Financial analysis deals with the project assessment from a potential private investor's point of view. Such analysis forecasts the expected cash flow related to a specific investment from which appropriate performance indicators are derived that highlight the profitability and, hence, the attractiveness of the investment. Clearly, these performance indicators do not reveal anything about the project from the government or society's point of view, which would require an economic (or cost-benefit) analysis. However, both terms are often used interchangeably to describe financial analysis procedures and assessment of socioeconomic effects of proposed projects.

In addition, very few examples exist to value the non-market (intangible) benefits such as better health conditions, better use of recycled water, and providing better protection of the most valuable resource in Jordan—water.

More detailed financial analysis of the project could not be performed because of significant modifications of the study area requested by WAJ, including options for partial and full closure of the Baqa'a WWTP. Once WAJ has decided how to stage Baqa'a closure, more detailed financial analysis should be performed as part of the preliminary engineering study of the project. Better knowledge of the outstanding financial obligations related to the Baqa'a WWTP is necessary for such analysis to be meaningful.

Our approach to examine the socioeconomic aspects of the project was to consider an 85 percent grant from USAID, thus mainly examining the affordability of the proposed project based on leading economic indicators and the most recent economic data (2006) provided by the Jordanian Department of Statistics.

12.1 Project Costs

Treatment and conveyance costs were estimated on the basis of the preliminary conceptual design of the selected alternative, and are presented in Sections 7 (O&M) and 10 (Construction costs). Additional costs, such as consulting services (detailed engineering, project supervision, and O&M training), have been based on fees as a proportion of total project costs. The percentage of those services was based on previous studies for the area.

Many of the capital and operation and maintenance cost estimates for the WWTP components described in this report and the associated appendices were developed using methodology from the CH2M HILL Parametric Cost Estimating System (CPES). CPES is a proprietary conceptual design and cost estimating tool that generates quick, accurate, and

detailed cost estimates at the conceptual stage of a WWTP project. CPES is based on general arrangement drawings derived from real projects. Using project-specific information from Pro2D™ and supplemental information input by the user, CPES generates project-specific facility designs and construction and life-cycle cost estimates. Compared with traditional conceptual estimating techniques, CPES yields a much clearer picture of the project's unique scope.

The cost of engineering services for wastewater collection, conveyance, and treatment projects in Jordan typically include special investigations, preliminary engineering design and reports, foundation exploration, detailed engineering, preparation of contract drawings and specifications, construction management, startup services, preparation of O&M manuals, O&M training, etc. Depending on the size and type of the project, engineering costs may range from 10 to 15 percent of the estimated capital costs when all of the above services are provided. For this project, we assumed that total engineering costs will average 12 percent of the contract cost.

WAJ also has its own administrative costs associated with any major construction project, covering such services as internal planning and budgeting, administration of engineering and construction contracts, legal services, and liaison with funding agencies. The assumed cost is shown in Table 12-1.

TABLE 12-1
Summary of Estimated Costs (Design Year = 2028, Average Day Design Flow = 6,619 m^3/day)

Cost Component	Cost in Jordanian Dollars
Capital Costs	
Sewer Network	JOD 36,113,000
Influent Pumping Station	JOD 826,000
Central WWTP	JOD 8,000,000
Treated Effluent Pipe	JOD 975,000
Engineering Services (Sewer Network)	JOD 3,611,000
Engineering Services(WWTP & Pumping & Effluent)	JOD 980,000
Assumed WAJ Administration Costs (WWTP)	JOD 500,000
Land Acquisition	JOD 1,500,000
Total Capital Costs	**JOD 52,505,000**
Annual WWTP O&M Costs	
Power (18,989 kW*h @ 41 JD / 1000 kW*h)	JOD 284,000
Consumable and Supply	JOD 119,000
Maintenance (3% of capital)	JOD 145,000
Labor (24 employees at average salary = 284 JD/month)	JOD 82,000
Sludge Disposal	JOD 31,000
Annual WWTP O&M Costs	**JOD 661,000**
O&M costs per cubic meter of treated wastewater (2,415,935 m^3/year at JOD 661,000 per year)	JOD 0.274
20-years NPV of O&M Costs at 5% annual discount rate	JOD 8,238,000
20-years NPV of O&M Costs at 8% annual discount rate	JOD 6,490,000

12.2 Revenue Estimates

For Jordan, in general, three economic parameters control the WWTP economy as follows.

- Cost of WWTP O&M
- Revenue from users tariffs
- Revenue from treated water reuse scheme (not applicable in this case because effluent is discharged into King Talal Dam).

The capital costs for this project are expected to be financed by a grant from USAID with 15 percent funded by Jordanian funds.

For the purpose of this analysis we assumed that water and sanitation revenues can be separated by category as shown, below, in Table 12-2.

TABLE 12-2
Assumed Water and Sanitation Tariffs Breakdown

Description	Current Tariffs	Percentage
Water and Wastewater	0.110	50
Collection System O&M	0.066	30
Depreciation of Assets	0.022	10
Administrative Overhead	0.022	10
Total	0.220	100%

Source: WAJ, Kofranjah WWTP Rehabilitation and Extension, Feasibility Study Report , 2002

Using these tariffs and the projected 2028 flow that will be treated in the WWTP (6,619 cubic meters per day), JOD 531,506 per annum could be recovered through this method.

Full cost recovery by tariffs would require an increase in the actual charge: presently, from 0.22 JOD per cubic meter of wastewater to about 0.60 JOD (at 5% capital recovery, as shown in Table 12-6) or 0.70 JOD (at 8% percent capital recovery as shown in Table 12-7).

To valuate the ability of the population in the study area to afford such increase, the data presented below are considered.

12.3 Socioeconomic Impact Assessment

This section presents the most current economic conditions prevailing in the Balqa Governorate. Table 12-3 presents the general statistical date of 2006 for the area.

TABLE 12-3
Statistical Data for Balqa Governorate

Description	Value
Total Population	349,580
Number of Households	61,589
Average Number of Persons per Household	5.67
Average Household Income	5,674 JD
Average per Capita Income	577 JD

Source: Department of Statistics, Jordan

To analyze the affordability of the project by the serviced population, a commonly accepted comparison can be drawn using Balqa'a Governorate average household income and percent expenditures for water and sanitation. Table 12-4, below, summarizes the distribution of household incomes.

TABLE 12-4
Distribution of Household by Income in Balqa Governorate, 2006

Annual Household Income (JOD)	% of households	Number of Households by Income
<1,800	5	3,079
1,800 – 2,400	14.2	8,746
2,400 – 3,000	7.2	4,434
3,000 – 3,600	6.7	4,126
3,600 – 4,200	7.8	4,804
4,200 – 4,800	6.6	4,065
4,800 -5,400	5.8	3,572
5,400 – 6,000	7.2	4,434
6,000 – 7,000	6.0	3,695
7,000 – 8,000	6.0	3,695
8,000 – 9,000	5.0	3,079
9,000 – 10,000	7.0	4,311
10,000 – 12,000	6.5	4,003
12,000 – 14,000	4.3	2,648
>14,000	4.7	2,895
Total number	100	61,589

Source: Department of Statistics

Based on the Household Expenditure and Income Survey of 2006 (Department of Statistics) the annual average household income in the Governorate of Balqa was 5,674 JOD, slightly higher than the Jordanian average of 5,589 JOD.

As shown in table 12-4, 53 percent of the population in the Governorate of Balqa has an average household income below the national average, which is approximately 64 percent.

To assess further the ability/willingness of the population in the area to pay for added wastewater collection/treatment services, we examined the most recent survey by the Department of Statistics on average annual household expenditures on groups of commodities and services by the Governorates and Kingdom. We found that Balqa households spent annually an average of 56.4 JOD on water and sanitation, while the Jordanian average spending for the same services is 72.2 JOD.

This water and sanitation expenditure portion is 3.4 percent of the average total annual household expenditures for the Balqa Governorate. In comparison, the national average spent on water and sanitation is 3.6 percent of the total expenditures on commodities and services.

The World Bank determines affordability where up to 3 to 5 percent of disposable income is for the provision of water and sanitation services.

For a household size of about 6 (current average size is 5.74), the required increased tariff implies that the minimum wastewater tariff should be 145 JOD per household (for approximately 11,000 households in 2028) for capital recovery at 5 percent, and 170 JOD at capital recovery of 8 percent. This expenditure is equivalent to 8.0 percent (5% capital recovery) or 9.4 percent (at 8% capital recovery) per annum for the lowest income category of 1,800 JOD, which, in any cases, receives Government subsidies for water and sanitation. Based on the next lowest level household income in the area (2,400 JOD), the annual expenditures on water and sanitation tariffs appear to be somewhere between 6.0 and 7.0 percent, which seems unaffordable in comparison with the World Bank range of 3 to 5 percent.

Also, placing a cost on the potential benefits associated with reduction of the overloaded conditions at the Baqa'a WWTP should be calculated for this project. Recently, the Jordanian Department of Statistics (DOS) published data covering the status of the Jordanian sewage treatment plants by design and operating capacities. The Baqa'a WWTP hydraulic design capacity (10,000 m3/day) was exceeded in 2006 by 6 percent, while the organic overloading was higher than 10 percent. Consequently re-routing a portion of the Ain El Basha pumping station flows to the new central WWTP would reduce the overloading conditions immediately and expand the useful life of the plant until additional financing becomes available to close down the plant completely.

Without further thorough evaluation of the socioeconomic benefits of the Baqa'a WWTP closure, any economic impact would not be representative and meaningful. We therefore suggest that such affordability study be performed during a separate detailed economic evaluation of diverting Baqa'a camp wastewater to the proposed Central WWTP. Based on current economical data, it appears that the Salt area wastewater treatment collection, conveyance and treatment, is a not a viable and affordable alternative to the current situation.

12.4 Capital Recovery Costs

The local portion (15%) of the capital cost estimates for the construction of the sewage network, WWTP, influent pumping station, and treated effluent outfall, presented in Table 12-1, has been divided by type of work and are summarized below in Table 12-5.

TABLE 12-5
Tentative Project Cost Breakdown by Work Type (JD)

Type of Work	Costs
Civil	JOD 3,150,339
Mechanical & Electrical	JOD 4,725,508
Management & Engineering	JOD 2,545,711
Total	JOD 10,421,558

Based on costs presented in Table 12-5, capital recovery costs have been calculated for the selected alternative at 5 and 8 percent discount rate. These costs are summarized below in Tables 12-6 and 12-7, respectively.

TABLE 12-6
Capital Costs Recovery at 5 Percent Discount Rate

Description	Life (years)	Factor	Cost JD/year
Civil	40	0.05828	JOD 183,600
Mechanical & Electrical	15	0.09634	JOD 455,255
Management & Engineering	40	0.05828	JOD 148,365
O&M			JOD 661,000
Total			JOD 1,448,220
Per household/per year			145

TABLE 12-7
Capital Costs Recovery at 8 Percent Discount Rate

Description	Life (years)	Factor	Cost JD/year
Civil	40	0.08386	JOD 264,190
Mechanical & Electrical	15	0.11683	JOD 552,090
Management & Engineering	40	0.08386	JOD 213,480
O&M			JOD 661,000
Total			JOD 1,690,760
Per household/per year			170

Capital recovery costs and affordability have been calculated also for additional alternatives presented in Appendix A (addition of Baqa'a camp wastewater to the study area) and Appendix B (diversion of the entire Baqa'a WWTP flow to the proposed Central WWTP).These costs are summarized below in Tables 12-8 and 12-9, respectively.

TABLE 12-8
Capital Costs Recovery at 5 Percent Discount Rate for Projects Including Baqa'a Camp and Baqa'a WWTP

Description	Study Area + Baqa'a Camp Flow	Study Area + Baqa'a Wastewater Treatment Plant Flow
Civil	JOD 226,940	JOD 307,720
Mechanical & Electrical	JOD 562,720	JOD 763,010
Management & Engineering	JOD 171,930	JOD 233,120
O&M	JOD 800,000	JOD 1,200,000
Total	JOD 1,761,590	JOD 2,503,850
Per household/per year	71	52

TABLE 12-9
Capital Costs Recovery at 8 Percent Discount Rate for Projects Including Baqa'a Camp and Baqa'a WWTP

Description	Study Area + Baqa'a Camp Flow	Study Area + Baqa'a Wastewater Treatment Plant Flow
Civil	JOD 326,550	JOD 442,780
Mechanical & Electrical	JOD 682,400	JOD 925,290
Management & Engineering	JOD 247,390	JOD 335,440
O&M	JOD 800,000	JOD 1,200,000
Total	JOD 2,056,340	JOD 2,903,510
Per household/per year	83	60

A comparison between per household costs presented in Tables 12-7 through 12-9 shows that adding Baqa'a camp wastewater to the study area improves significantly the economic affordability of the project. This improvement is due to the sharp increase of serviced population (158,000 people with Baqa'a camp versus 63,000 without), and has additional benefits, such as:

- Reduction of the overloading conditions at Baqa'a WWTP
- Reduction of sludge production
- Reduction of O&M costs
- Potential significant reduction/elimination of odors in the area
- Improved protection of the underlying aquifer
- Etc.

It is thus recommended to expand the current study and add Baqa'a camp wastewater as well as Baqa'a WWTP thorough economic evaluation and WWTP design optimization. Based on this feasibility study covering only villages east of Salt, it appears that building sewer network to service only the TOR villages might be unaffordable for the population of the villages included in the Terms of Reference of this study.

12.5 Developmental Impact Assessment

The feasibility study for the Salt area was initiated with several main objectives, notably:

- Prevention of sanitary nuisance resulting from potential discharge of cesspit untreated wastewaters into surface and groundwaters
- Potential improvement of the living conditions of the local population
- Increased extent of sewage system to allow access to modern sanitation facilities by a larger number of customers
- Potential alleviation of the problems at the Baqa'a WWTP
- Production of high-quality effluent for potential addition to King Talal reservoir and further agricultural reuse

The implementation of the Salt area wastewater collection/conveyance/treatment project will achieve those objectives that are sound and safe for the health of the local populace and for the Balqa'a environment, as long as some wastewater flow from Baqa'a camp area is also added to the project itself. The project is consistent with the Jordanian Government strategy to increase the number of citizens served by modern sanitation facilities. In addition, it will increase the quantities of treated wastewater recovered for beneficial reuse.
Some of the other direct and indirect benefits of this project are listed below:

- An improvement in the environmental conditions in the Baqa'a refugee camp
- Reduction of the pollution of surface and groundwater by the overloaded conditions at the camp
- Improvement in the socioeconomic conditions in the area
- Employment opportunity during the construction of the facilities, as well as during the operational life of the WWTP
- Connection of low-income households to the sewerage system
- Provision of services in new areas to improve the socioeconomic conditions and potentially to attract people to live in the areas, possibly increasing land values
- Potential increased tourist attraction due to better environmental conditions in the area
- Enhanced collaboration and technology transfer with local engineering firms, providing greater economic opportunities for the citizens of the area

Appendix A

Inception Report

Hashemite Kingdom of Jordan

Water Authority of Jordan

سلطة المياه
WATER AUTHORITY

Inception Report

For

Wastewater Treatment Feasibility Study in Jordan

July 2008

USTDA
Appropriation No.: 117/81001
Activity No.: 2007-21009A
Reservation No.: 072109055
Grant No.: GH072109055

CH2MHILL

In association with

world-class craft, domestic insight

This report was funded by the U.S. Trade and Development Agency (USTDA), an agency of the U.S. Government. The opinions, findings, conclusions, or recommendations expressed in this document are those of the author(s) and do not necessarily represent the official position or policies of USTDA. USTDA makes no representation about, nor does it accept responsibility for, the accuracy or completeness of the information contained in this report.

Mailing and Delivery Address: 1000 Wilson Boulevard, Suite 1600, Arlington, VA 22209-3901
Phone: 703–875–4357 • **Fax:** 703–875–4009 • **Web site:** www.tda.gov • **email:** info@tda.gov

The U.S. Trade and Development Agency

The U.S. Trade and Development Agency (USTDA) advances economic development and U.S. commercial interests in developing and middle income countries. The agency funds various forms of technical assistance, feasibility studies, training, orientation visits and business workshops that support the development of a modern infrastructure and a fair and open trading environment.

USTDA's strategic use of foreign assistance funds to support sound investment policy and decision-making in host countries creates an enabling environment for trade, investment and sustainable economic development. Operating at the nexus of foreign policy and commerce, USTDA is uniquely positioned to work with U.S. firms and host countries in achieving the agency's trade and development goals. In carrying out its mission, USTDA gives emphasis to economic sectors that may benefit from U.S. exports of goods and services.

Mailing and Delivery Address: 1000 Wilson Boulevard, Suite 1600, Arlington, VA 22209-3901
Phone: 703–875–4357 • **Fax:** 703 875 4009 • **Web site:** www.tda.gov • **email:** info@tda.gov

Table of Contents

Topic	Page
Purpose	1
Background Information	1
Meteorological Data	2
Population Growth Rates	2
Population Projections	3
Study Area Sewer System	3
Geographic/Topographic Information	5
Staff Mobilization Plan and Schedule	5
Data Gap Analysis	6

Purpose

The purpose of this inception report is to briefly describe the staff mobilization plan, progress in collecting existing data, problems encountered or foreseen, and the projected program of work.

Background Information

The Terms of Reference for this project from the USTDA Grant Agreement (as outlined in the Request for Proposals) listed the following documents as being relevant to this overall study.

- *WAJ Wastewater Investment Plan*
- *National Wastewater Planning Study for Unplanned Towns and Villagers, The Water Authority, Amman, MRM Consulting Engineers Co. Ltd., in association with Travers Morgan RKJL (1985)*
- *Study and Report on Treatment Plant Locations, The Water Authority, Amman*
- *Water Treatment and Water Resources Planning, Ministry of Planning, Amman, Thames Water International (1988)*
- *Joint Mission Report on Wastewater Treatment and Reuse in Jordan, UNDP/World Bank Integrated Resources Recovery Project, Amman, M.B. Pescod and Fabian A. Yanez (1988),*
- *Health Guidelines for the Use of Wastewater in Agriculture and Aquaculture,Technical Report Series 778, World Health Organization, Geneva (1989),*

Inquiries made with the Water Authority of Jordan (WAJ) as to the availability of these documents, and unfortunately only the "WAJ Wastewater Investment Plan" was determined to be readily available. However, in general, these documents are considered to be somewhat out-dated and not necessarily relevant to the objectives of this study.

Additional discussion and research with WAJ with respect to this project indicated that there were a number of other documents that included much more relevant information on the wastewater treatment plants, and socio-economic data pertinent to this study. These are listed as follows:

1. Water Resuse Study Report for Fuheis/Mahis and Wadi Mousa Sewage Treatment Plants. April 1994.
2. Study and Design of Effluent Reuse Scheme and New Arrangements of Structures for Fuheis/Mahis WWTP. November 1994.
3. Conceptual Report for Baqa'a and Abu Nuseir WWTP's. January 24, 1994
4. Wastewater Collection, Treatment, Disposal and/or Re-use System Project for the Catchment Areas of the Yarmouk River and Jordan River. Dec. 1998
5. Feasibility Report for Baqa'a and Abu Nuseir WWTP's. April 10, 1995.

Copies of these studies have been made in both hard-copy and electronic format and distributed to the entire project team.

These reports, which date from the mid to late 90's, contain relevant data regarding flow and load projections, as well as information on typical land-use and potential effluent re-use opportunities.

Meteorological Data

The following meteorological data was obtained by Engicon for the Salt area:

Mar	Apr	May	Jun	Jul	Aug	Sept	Oct	Nov	Dec	Yearly
10	15.5	20.3	22.6	24.4	24.6	23.1	20.4	14.7	10.3	16.8
13.7	20.3	25.4	27.7	29.3	29.5	27.9	24.8	18.3	12.9	21.0
6.3	10.7	15.2	17.4	19.4	19.6	18.3	16	11.1	6.9	12.5
99.7	26.4	3.2	0.2	0	0	0.2	13.4	49.7	99.5	551.5
70.1	52	45.8	49.4	54.5	57.4	57.5	57.1	62.5	73.2	61.1
908	907.3	907.1	905.8	904.2	905.3	907..6	910.1	910.5	911.3	908.1
1458.4	1463.7	1473.1	1463.4	1448.3	1460.1	1480	1497.5	1491.5	1493.7	1472.9

Population Growth Rates

Population growth rates are anticipated to subside over the next twenty years. Growth rate projections are shown below:

Year	Growth Rate (%)	Year	Growth Rate (%)
2005	2.3	**2017**	1.50
2006	2.3	**2018**	1.40
2007	2.2	**2019**	1.40
2008	2.0	**2020**	1.40
2009	2.0	**2021**	1.30
2010	2.0	**2022**	1.30
2011	2.0	**2023**	1.30
2012	1.9	**2024**	1.20
2013	1.8	**2025**	1.20
2014	1.7	**2026**	1.20
2015	1.6	**2027**	1.20
2016	1.5	**2028**	1.20

Population Projections

Population projections for various communities and villages in the study area are shown on the following page.

Study Area Population Projection

locality (ToR)	2004	2008	2010	2015	2020	2025	2028
Yazedeyah	1108	1209	1258	1375	1477	1572	1630
Za'atari	1280	1396	1453	1588	1706	1816	1882
Hodaib	311	339	353	386	415	441	457
Al-Ermameen	1787	1950	2028	2218	2382	2536	2628
Um Jozeh	2577	2811	2925	3198	3435	3657	3790
Al-Waseyah	316	345	359	392	421	448	465
Ain Elbasha	**38258**	41737	43424	47475	50993	54287	**56265**
Al Seru Ahleyah University	1965	2144	2230	2438	2619	2788	2890
Daheyat Zuhour	888	969	1008	1102	1184	1260	1306
Daheyat Al-Zahra	360	393	409	447	480	511	529
						Total	**71842**
Localities within catchment area (not in ToR)	**2004**	**2008**	**2010**	**2015**	**2020**	**2025**	**2028**
Jalaad	650	709	738	807	866	922	956
Al Sahloulieh	361	394	410	448	481	512	531
Um Njasa	743	811	843	922	990	1054	1093
Um Aldananeer	737	804	837	915	982	1046	1084
Um Sindianeh	204	223	232	253	272	289	300
Slaihi	805	878	914	999	1073	1142	1184
Al Mudari	752	820	854	933	1002	1067	1106
Um Alamad	1191	1299	1352	1478	1587	1690	1752
Daam	474	517	538	588	632	673	697
Salouf	440	480	499	546	586	624	647
Wadi Al Naqa	242	264	275	300	323	343	356
Zai	3012	3286	3419	3738	4015	4274	4430
						Total	**14135**
						Catchment Total	**85977**
Localities Currently Connected to Baqa'a WWTP	**2004**	**2008**	**2010**	**2015**	**2020**	**2025**	**2028**
Suweilih	46338	50552	52594	57388	61641	65494	67880
Kamaliah	15611	17031	17719	19334	20766	22064	22868
Ain Albasha	38258	41737	43424	47381	50892	54073	56044
Safut	7615	8308	8643	9431	10130	10763	11155
Um Aldananeer	737	804	837	913	980	1042	1080
Al Shuwaihi	2318	2529	2631	2876	3090	3289	3409
Abu Nuseir	5777	6302	6557	7155	7685	8165	8463
Salhob	2071	2259	2351	2565	2755	2927	3034
Abo Hamid	894	975	1015	1107	1189	1264	1310
Mubis	2767	3019	3141	3430	3684	3915	4057
Baqa'a Camp	64249	66858	68202	73761	79226	84179	87246
Al-Hino	3797	3951	4031	4279	4542	4773	**266544**

Study Area Sewer System

The table on the following page shows the sewered and un-sewered communities within the study area, including both those localities that were identified in the contractual terms of reference (TOR) and those that are not.

Table 1 – Study Area Sewered and Un-sewered Communities

locality (ToR)	with sewer network	with Cesspits	No System
Yazeediyyeh		121	3
Za'atari		173	
Hodaib		44	
Rmemen		207	
Um Jauzeh		325	1
Waseah		47	
Ain Albasha	2388	967	2
Al Seru	32	220	2
Ahleyah University	WWTP		
Dahyat Zuhour	10	70	
Dahyat Al-Zahra		80	

Localities within catchment area (not in ToR)	with sewer network	with Cesspits	No System
Jalaad		121	5
Al Sahloulieh		55	
Um Njasa		79	
Um Aldananeer	61	12	
Um Sindianeh		37	
Wadi Naqa		39	
Slaihi		115	3
Al Mudari		77	
Um Alamad		142	
Daam		79	
Salouf		64	
Zai		404	1

Localities Currently Connected to Baqa'a WWTP	with sewer network	with Cesspits	No System
Suweilih	2841	480	
Kamaliah	979	196	
Ain Albasha	2388	967	2
Safut	419	217	19
Um Aldananeer	61	12	
Abu Nuseir	276	414	9
Salhob	151	140	
Abo Hamid	71	39	
Mubis	77	288	10
Baqa'a Camp	7696	10	2
Al Shuwaihi	168	30	
Al-Hino	220	138	2

Geographic/Topographic Information

The available GIS data for the study area contains the following information (layers):

1-Base maps
2-Roads and streets
3-Land marks
4-Contour lines with interval of 20 m.
5-Routes of Wadis
6-Water Distribution Networks

A map showing the drainage systems for the study area is provided on the following page.

Staff Mobilization Plan and Schedule

The Notice to Proceed for the project was issued on May 14th, 2008. CH2M HILL staff arrived in Jordan on May 16, 2008, and initial meetings for the project were conducted with both the WAJ and Engicon during the week of May 16-23, 2008. A staff mobilization workplan was finalized during this initial project kickoff week, and site visits to the study area were conducted.

Staff assigned and mobilized for the project from CH2M HILL include the following:

Position	Assigned Staff
Senior sanitary Engineer- Team leader	Alexandra Kantardjieff
Assistant Project Manager	Bently Green
Senior Process Engineer	Steve Goodwin
Senior Modeling	Jim McQuarrie
Junior process engineer	Phil Ogden
GIS Expert	Pankaj Patel
Financial Expert	Scott Haskins

Staff assigned and already mobilized for the project from Engicon include the following:

Position	Assigned Staff
Deputy Project Manager	Eng.M.Sotari
GIS Expert	Eng.S.Qarmout
Electrical Eng.	Khalid Elayan
Mechanical Eng.	Wael Zurieqat
Geotechnical Engineer	Issa Abo Taa
Hydraulic Engineer	A. Shaka'a
Quantity Surveyor	Ahmad Badain
Sewer Design Eng.	Samir Amoudi
Financial Analyst	Haitham Awad
CAD	Nabil Darwish
Environmental Study Team	
Environmentalist	Nazieh Bandak
	Ronnie Theodory
	Lamma Bashoor
Reuse Team	Dr.Mohd Kharoof

Data Gap Analysis

At this time, there appears to be sufficient data to conduct and complete this report. CH2M HILL and Engicon anticipate working closely with the Water Authority of Jordan to identify project constraints and issues that may impact the overall feasibility of providing sewer facilities in the study area.

Appendix B

Technical Memorandum

Conceptual Design for New Wastewater Treatment Facility (including Baqa'a Camp for Year 2028)

Conceptual Design for WWTP Serving Selected Alternative Study Area and Baqa'a Camp with 2028 Projected Flows and Loads

PREPARED FOR: Water Authority of Jordan

PREPARED BY: CH2M HILL

COPIES: File

DATE: January 16, 2009

During November 2008, the Water Authority of Jordan requested that CH2M HILL evaluate preliminary design and cost considerations for the construction of a wastewater treatment plant (WWTP) to treat projected flow for the selected alternative study area and the Baqa'a Camp for 2028. CH2M HILL developed a computer-based biological process model for equipment sizing and developed associated cost estimates. This technical memorandum (TM) presents the results of the examination described above. For the purposes of this TM, the referenced facility is described as the "2028 Selected Alternative with Baqa'a Camp WWTP."

Design Conditions

Projected 2028 flow and loading values were used during computer-based biological process modeling of the 2028 Selected Alternative and Baqa'a Camp WWTP, and are presented in Table 1. Both projected 2028 average day and maximum month flow and loading conditions are shown. Average daily loading conditions were based on 2007 influent contaminant concentration data from the Salt WWTP. Maximum month flow and loading values were estimated by multiplying average daily flow and loading values by a peaking factor of 1.4.

TABLE 1
2028 Selected Alternative and Baqa'a Camp Projected Influent Flow and Loading

	Average Day Design		Maximum Month Design	
Parameter	(m^3/day, kg/day)	(gpd, lbs/day)	(m^3/day, kg/day)	(gpd, lbs/day)
Flow	16,406	4,335,000	22,969	6,069,000
COD	21,666	47,723	30,333	66,812
BOD	13,131	28,923	18,384	40,492
TSS	14,772	32,539	20,681	45,554
TKN	2,462	5,423	3,447	7,592
NH_3	1,477	3,254	2,068	4,555

COPYRIGHT 2009 BY CH2M HILL, INC. • COMPANY CONFIDENTIAL

TABLE 1
2028 Selected Alternative and Baqa'a Camp Projected Influent Flow and Loading

	Average Day Design		Maximum Month Design	
Parameter	**(m^3/day, kg/day)**	**(gpd, lbs/day)**	**(m^3/day, kg/day)**	**(gpd, lbs/day)**
TP	410	904	574	1,265

Table 2 presents goals for plant effluent contaminant concentrations used during biological process modeling. In general, plant effluent contaminant concentration goals used during wastewater process model development were 70% of the effluent contaminant concentration limits provided by the Water Authority of Jordan in order to provide a safety factor in biological process reactor and equipment sizing. Values shown in Table 2 are the same as those used during the development of biological process models for the "Conceptual Report for Wastewater Treatment Feasibility Study in Jordan."

TABLE 2
Effluent Contaminant Limits and Goals for Process Modeling

Parameter	Effluent Limit (mg/L)
Total Suspended Solids	60.0
Biochemical Oxygen Demand ($CBOD_5$)	60.0
Chemical Oxygen Demand (COD)	150
Total Nitrogen (TN)	70.0
Nitrate (NO_3-N)	18.0
Total Phosphorus (TP)	15.0

Estimated Equipment Sizing and Mass Balance

Table 3 presents the types of equipment utilized during development of the biological process models and wastewater treatment facility cost estimates for this TM.

TABLE 3
Proposed Equipment Types

Unit Process	Description
Influent Pumps	Submersible
Screening	Mechanical Bar Screen
Grit Removal	Vortex Grit Removal
Process Reactors	MLE, Concrete
Nitrified Recycle Pumps	Axial-Flow

COPYRIGHT 2009 BY CH2M HILL, INC. • COMPANY CONFIDENTIAL

TABLE 3
Proposed Equipment Types

Unit Process	Description
Anoxic Basin Mixing	Submersible Mixers
Blowers (Process Reactors)	Multi-stage centrifugal with fine-bubble membrane diffusers
Clarifiers	Center-feed circular
RAS Pumping	Submersible
WAS Pumping	Submersible
WAS Thickening	Gravity Belt Thickeners
Thickened Sludge Pumping	Progressing Cavity
Aerobic Digesters	Concrete
Blowers (Aerobic Digester)	Multi-stage centrifugal
Dewatering Feed Pumps	Progressing Cavity
Dewatering Method	Belt Filter Presses

Table 4 presents estimated equipment sizing for the 2028 Selected Alternative and Baqa'a Camp WWTP based on results from biological process modeling.

TABLE 4
2028 Selected Alternative and Baqa'a Camp WWTP – Estimated WWTP Sizing

	SI Units	Standard Units
Influent Pumps	5 @ 9,160 L/min each (duty), 1 @ 9,160 L/min (standby)	5 @ 2,420 gpm each (duty), 1 @ 2,420 (standby)
Screening	1 @ 65,900 m3/day (duty), 1 @ 65,900 m3/day (standby)	1 @ 17.4 mgd (duty), 1 @ 17.4 mgd (st
Grit Removal	1 @ 65,900 m3/day (duty), 1 @ 65,900 m3/day (standby)	1 @ 17.4 mgd (duty), 1 @ 17.4 mgd (st
Process Reactors	8 trains @ 6,700 m3 each (53,600 m3 total)	8 trains @ 1.77 MG each (14.16 MG tot
Nitrified Recycle Pumps	4 @ 27,300 L/min each	4 @ 7,200 gpm each
Submersible Mixers	2 / train (6 total)	
Blowers (Process Reactors)	8 @ 5,200 N*m3/hr each (duty), 1 @ 5,200 N*m3/hr (standby)	8 @ 3,060 scfm each (duty), 1 @ 3,060 (standby)
Clarifiers	2 @ 645.6 m2 each	2 @ 6,950 ft2 each
RAS Pumping	3 @ 5,400 L/min each (duty), 1 @ 5,400 L/min each (standby)	3 @ 1,410 gpm each (duty), 1 @ 1,410 (standby)
WAS Thickener Feed Pumping	2 @ 104,100 L/hr (duty), 1 @ 104,100 L/hr (standby)	2 @ 27,500 gph (duty), 1 @ 27,500 gph (standby)

COPYRIGHT 2009 BY CH2M HILL, INC. • COMPANY CONFIDENTIAL

TABLE 4
2028 Selected Alternative and Baqa'a Camp WWTP – Estimated WWTP Sizing

	SI Units	Standard Units
WAS Thickening	2 @ 985 m3/day (duty), 1 @ 985 m3/day (standby)	2 @ 259,500 gpd (duty), 1 @ 259,50[illegible] (standby)
Thickened Sludge Pumping	2 @ 24,700 L/hr (duty), 1 @ 24,700 L/hr (standby)	2 @ 6,520 gph (duty), 1 @ 6,520 gph
Aerobic Digesters	16,541 m3	4.37 MG
Blowers (Aerobic Digester)	4 @ 8,840 N*m3/hr each (duty), 1 @ 8,840 N*m3/hr (standby)	4 @ 5,200 scfm each (duty), 1 @ 5,2[illegible] (standby)
Dewatering Feed Pumps	5 @ 41.6 m3/hr each (duty), 1 @ 41.6 m3/hr (standby)	5 @ 11,000 gph (duty), 1 @ 11,000 g[illegible] (standby)
Dewatering Method	Belt Filter Presses - 4 @ 24,700 Lph (duty)	Belt Filter Presses - 4 @ 6,520 gph ([illegible]

A mass balance analysis was also performed for the 2028 Selected Alternative and Baqa'a Camp WWTP. Figure 1 shows a process schematic for the 2028 Selected Alternative and Baqa'a Camp WWTP, with corresponding values from the maximum month design mass balance analysis shown in Table 5.

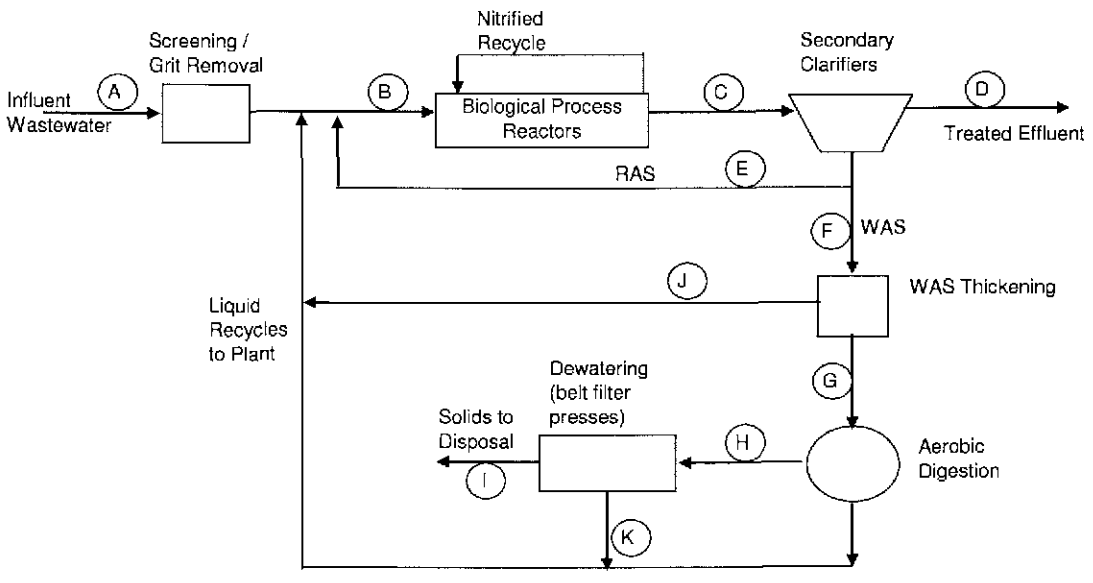

FIGURE 1
Process Schematic for 2028 Selected Alternative and Baqa'a Camp WWTP

COPYRIGHT 2009 BY CH2M HILL, INC. • COMPANY CONFIDENTIAL

TABLE 5

Mass Balance for 2028 Selected Alternative and Baqa'a Camp WWTP

		BOD_5		TSS	
Flow Stream Identification	**Flow (m3/day)**	**kg/day**	**mg/L**	**kg/day**	**mg/L**
Main Process Streams					
A - Influent Wastewater	22,974	18,367	800	20,664	900
B - Biological Process Reactor Influent	24,888	19,228	773	24,040	966
C - Biological Process Reactor Effluent	36,382	36,219	996	130,189	3,578
D - Secondary Clarifier Effluent	22,923	108	5	344	15
Solids Process Streams					
E - Return Activated Sludge	11,494			110,894	9,648
F - Waste Activated Sludge	1,963			18,939	9,648
G - Thickened WAS	537			16,098	30,000
H - Digested Sludge	412			12,370	30,000
I - Dewatered Sludge	59			11,751	200,000
J - WAS Thickener Centrate	1,426			2,841	1,992
K - Dewatering Centrate	561			618	1,103

Cost Estimates

Based on the computer-based wastewater process design models developed for estimated sizing of the 2028 Selected Alternative and Baqa'a Camp WWTP, preliminary construction cost and operation and maintenance cost estimates were developed. Estimated costs are presented in this section of the TM, with subsections for estimated construction cost and estimated annual operation and maintenance costs and net present value.

Construction Cost Estimate

Several assumptions were made during the development of the construction cost estimate, including the following:

- Markups were included:
  - Contractor Overhead and Profit (17%)
  - Contractor Mobilization / Demobilization (3%)
  - Contractor Bonds and Insurance (2.7%)

COPYRIGHT 2009 BY CH2M HILL, INC. • COMPANY CONFIDENTIAL

  - Contingency (20%)
- Taxes were included at 7% of the total estimated cost after allowances and markups.
- Construction cost estimates were initially performed in 2008 US dollars, and were converted to 2008 Jordan Dinars based on the conversion rate at 12 noon, September 15, 2008 (1 JOD = 1.41 USD).
- An allowance of JOD 1,500,000 for land acquisition was included based on unit pricing derived from a land acquisition of 50,000 square meters.

The estimated construction costs for the 2028 Selected Alternative and Baqa'a Camp WWTP are shown in Table 6.

TABLE 6
Estimated Construction Cost for 2028 Selected Alternative and Baqa'a Camp WWTP

Unit Process	Capital Cost Estimate
Raw Capital Cost	JOD 13,000,000
Mark ups	JOD 3,000,000
Contingencies	JOD 3,500,000
Land Acquisition Allowance	JOD 1,500,000
Total Estimated Construction Cost	**JOD 21,000,000**

Operation and Maintenance Cost Estimate and Net Present Value

Several assumptions were made during the development of the operations and maintenance cost estimates, including the following:

- Electricity costs were established at JOD 41 per 1000 kilowatts (kW), or 0.06 USD per kW.
- Based on magnitude of influent flow and complexity of operations, it was assumed that the 2028 Selected Alternative and Baqa'a Camp WWTP would be staffed by the same number of management employees as the selected alternative, with higher number of operators and general helpers.
- For the purposes of operation and maintenance cost development, it was assumed that employees would be paid at rates given in the main report for the selected alternative.
- The annualized operation and maintenance cost for the 2028 Selected Alternative and Baqa'a Camp WWTP was developed based on design flows and a 20-year net present

COPYRIGHT 2009 BY CH2M HILL, INC. • COMPANY CONFIDENTIAL

value analysis. For this analysis, an annual discount rate of 6.0% was used, along with an annual inflation rate of 3.0%.

With the assumptions stated above, the estimated annual operation and maintenance cost for the 2028 Selected Alternative and Baqa'a Camp WWTP is JOD 800,000.

The 20-year Net Present Value (NPV) for the 2028 Selected Alternative and Baqa'a Camp WWTP was developed using the annual discount rate and annual inflation rate listed above. Additionally, the construction cost estimate was used without escalation in the NPV analysis. The construction cost estimate, NPV of estimated annual operation and maintenance costs, and resulting total NPV are presented in Table 7.

TABLE 7
2028 Selected Alternative and Baqa'a Camp WWTP Net Present Value

Description	Estimated Value
Total Estimated Construction Cost	JOD 21,000,000
NPV of Annual O&M	JOD 11,550,000
Total 20-Year NPV	**JOD 32,550,000**

COPYRIGHT 2009 BY CH2M HILL, INC. • COMPANY CONFIDENTIAL

Attachment A

Model Results Summary for 2028 Selected Alternative with Baqa'a Camp WWTP

Projected 2028 Average Daily Flow = 16,410 m^3/day

Projected 2028 Maximum Month Flow = 22,974 m^3/day

Estimated Equipment Sizing:

- 8 process reactors at 6,700 m^3 each
- 2 circular clarifiers at 29 m diameter each
- 16,537 m^3 total aerobic digester volume

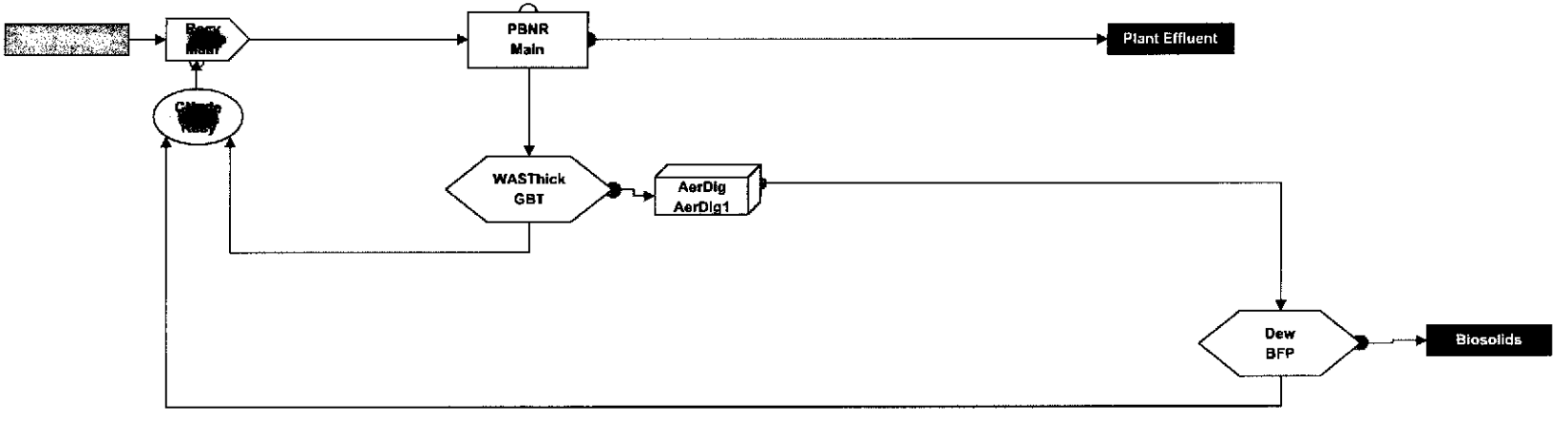

This document is the property of CH2M HILL, Inc.
The expression of the information contained in this
document is protected under U.S. copyright law.

Use Instructions: See Comment in this cel..

Linked Model Input	Current Run:	Comments	Scenarios: Max Month (winter)	Comments	Max Month (summer)	Comments	Average Day	Comments	For Class 1 Reliability	Comments
Flow (m3/day)	22,974	2028 MM	22,974	2028 MM	22,974	2028 MM	16,410	2028 AD Flow	17,230	75% of MM
Diurnal Flow Peaking Factor	1.43	MxD:MM	1.43	MxD:MM	1.43	MxD:MM	2	MxD:AD	1.43	Same as MxD:MM
CBOD5 (kg/day)	18,367	MM loading	18,367	MM loading	18,367	MM loading	12,833	AD Loading	13,775	75% of MM
TSS (kg/day)	20,663	MM loading	20,663	MM loading	20,663	MM loading	14,759	AD Loading	15,497	75% of MM
% VS	75%		75%		75%		75%		75%	
TKN (kg/day)	3,444	MM loading	3,444	MM loading	3,444	MM loading	2,460	AD Loading	2,583	75% of MM
Ammonia -N (kg/day)	2,066	MM loading	2,066	MM loading	2,066	MM loading	1,476	AD Loading	1,550	75% of MM
Total Phosphate - P (kg/day)	574	MM loading	574	MM loading	574	MM loading	410	AD Loading	430	75% of MM
Alkalinity (kg/day)	22,959	Assumed at 1000 mg/L	22,959	Assumed at 1000 mg/L	22,959	Assumed at 1000 mg/L	16,399	Assumed at 1000 mg/L	17,219	Assumed at 1000 mg/L
Hydrogen Sulfide (kg/day)	551	Assumed at 24 mg/L	551	Assumed at 24 mg/L	551	Assumed at 24 mg/L	394	Assumed at 24 mg/L	413	Assumed at 24 mg/L
Number of Aeration Basin Trains Online	8		8		8		8		8	
Volume per Train (m3)	6,700		6,700		6,700		6,700		6,700	
Total Aeration Basin Volume in Service (m3)	53,602		53,602		53,602		53,602		53,602	
SRT	10		10		10		10		10	
System pH	7.2		7.2		7.2		7.2		7.2	
Temperature °C	14	Minimum Month	14	Minimum Month	24.6	Maximum Month	16.8	Annual Average	14	Minimum Month
Nitrified Recycle Rate (% of Aer Basin influent flow)	625%		625%		625%		605%		625%	
Number of Secondary Clarifiers Online	2		2		2		2		1	
Surface Area per Secondary Clarifier (sq m)	646		646		646		646		646	
Total Secondary Clarifier Area (sq m)	1,291		1,291		1,291		1,291		646	
Secondary Clarifier Diameter (m)	29		29		29		29		29	
SVI (mL/g)	150		150		150		150		150	
Average Secondary Effluent TSS (mg/L)	15	Fixed	15	Fixed	15	Fixed	15	Fixed	15	Fixed
Peak Secondary Effluent TSS (mg/L)	20	Fixed	20	Fixed	20	Fixed	20	Fixed	20	Fixed
Average RAS Underflow Rate (% of Inf Q)	46.2%	Calculated	46.2%	Calculated	46.2%	Calculated	44.5%	Calculated	44.8%	Calculated
Peak RAS Underflow Rate (% of Inf Q)	64.2%	Calculated	64.2%	Calculated	63.8%	Calculated	46.6%	Calculated	62.5%	Calculated
Thickener Solids Capture (%)	85%		85%		85%		85%		85%	
Thickened Sludge Concentration (mg/L)	30,000		30,000		30,000		30,000		30,000	
AerDig1 Volume (m3)	16,537		16,537		16,537		16,537		16,537	
AerDig1 Temperature (°C)	14	Minimum Month	14	Minimum Month	24.6	Maximum Month	16.8	Annual Average	14	Minimum Month
AerDig1 DO (mg/L)	2		2		2		2		2	
AerDig1 % Denitrification	20%		20%		20%		20%		20%	
Dewatering Solids Capture (%)	95%		95%		95%		95%		95%	
Dewatered Sludge Concentration (%)	20%		20%		20%		20%		20%	
Results										
SRT	10.0		10.0		10.0		10.0		10.0	
Final Anoxic Zone NO3	0.13	want < 0.5	0.13	want < 0.5	0.05	want < 0.5	0.10	want < 0.5	0.11	want < 0.5
Secondary Effluent TSS (mg/L)	15.0	want < 60 (goal = 42)	15.0	want < 60 (goal = 42)	15.0	want < 60 (goal = 42)	15.0	want < 60 (goal = 42)	15.0	want < 60 (goal = 42)
Secondary Effluent CBOD5 (mg/L)	4.73	want < 60 (goal = 42)	4.73	want < 60 (goal = 42)	4.15	want < 60 (goal = 42)	4.47	want < 60 (goal = 42)	4.64	want < 60 (goal = 42)
Secondary Effluent COD (mg/L)	60.3	want < 150, (goal = 105.0)	60.3	want < 150, (goal = 105.0)	59.8	want < 150, (goal = 105.0)	59.2	want < 150, (goal = 105.0)	60.1	want < 150, (goal = 105.0)
Secondary Effluent TN (mg/L)	16.1	want < 70, (goal = 49.0)	16.1	want < 70, (goal = 49.0)	16.1	want < 70, (goal = 49.0)	16.1	want < 70, (goal = 49.0)	15.8	want < 70, (goal = 49.0)
Secondary Effluent NH3-N (mg/L)	0.15		0.15		0.08		0.09		0.15	
Secondary Effluent NO3-N (mg/L)	12.473	want < 18 (goal is 12.6)	12.473	want < 18 (goal is 12.6)	12.498	want < 18 (goal is 12.6)	12.552	want < 18 (goal is 12.6)	12.175	want < 18 (goal is 12.6)
Secondary Effluent TP (mg/L)	5.47	want < 15 (goal = 10.5)	5.48	want < 15 (goal = 10.5)	1.90	want < 15 (goal = 10.5)	6.61	want < 15 (goal = 10.5)	6.70	want < 15 (goal = 10.5)
Influent COD (mg/L)	1,568	~1320 mg/L per ops data	1,568	~1320 mg/L per ops data	1,568	~1320 mg/L per ops data	1,539	~1320 mg/L per ops data	1,568	~1320 mg/L per ops data
Corresponding Average MLSS (mg/L)	3,597	want < 3600 at MM	3,598	want < 3600 at MM	3,568	want < 3600 at MM	2,554	want < 3600 at MM	2,722	want < 3600 at MM
Secondary Influent MLSS (mg/L)	3,579		3,579		3,547		2,536		2,705	
Nitrified Recycle Rate (m3/day)	155,519		155,520		155,521		111,454		120,160	
Solids Loading Rate To Secondary Clarifiers (kg/day-sq m)	100.8		100.8		99.9		52.3		116.6	
RAS Rate (m3/day)	11,493		11,486		11,485		8,204		8,616	
Corresponding WAS (kg/day)	18,939		18,941		18,782		13,443		14,335	
Combined Thickened Feed Sludge to Aerobic Dig. (kg/day)	16,098		16,100		15,965		11,426		12,185	
Digester Volatile Solids Loading Rate (kg/day-m3)	0.56		0.56		0.53		0.39		0.42	
Digester SRT	30.82		30.81		31.07		43.42		40.72	
Model Prediction of VS Destruction (combined)	39.62%		39.61%		37.41%		41.19%		41.65%	
Digester Alkalinity Limited?	yes		yes		yes		yes		yes	
SOUR in Digester (mg O2/hour/gram TS)	0.65	want < 1.5 at 20 C, goal = 1.13	0.65	want < 1.5 at 20 C, goal = 1.13	0.57	want < 1.5 at 20 C, goal = 1.13	0.49	want < 1.5 at 20 C, goal = 1.13	0.54	want < 1.5 at 20 C, goal = 1.13
Dewatered Solids From Plant (kg/day)	10,176		10,177		10,201		6,942		7,410	
PBNR AOR (kg/day)	28,117		28,117		29,137		19,979		21,048	
PBNR SOR (kg/day)	83,504		83,505		99,943		55,277		57,106	
PBNR Total Required Air Rate in Zones 3-5 (N*m3/hr)	34,355		34,356		41,624		24,161		24,311	

This document is the property of CH2M HILL, Inc.
The expression of the information contained in this
document is protected under U.S. copyright law.

Stoichiometric Parameter		Value	Default	Units
Hydrolysis of Particulate Substrate: X_S				
Production of Soluble Inert COD: S_I	f_{SI}	0.00		g COD/g COD
Heterotrophic Organisms: X_H				
Yield	Y_H	0.6660		g COD/g COD
Fraction of Lysis Inerts	f_{XI}	0.08		g COD/g COD
Phosphorus Accumulating Organisms: X_{PAO}				
Yield (biomass/PHA)	Y_{PAO}	0.6250		g COD/g COD
Phosphate release per PHA Stored	Y_{PO4}	0.40		g P/g COD
PHA requirement for PP storage	Y_{PHA}	0.20		g COD/g P
Fraction of Lysis Inerts	f_{XI}	0.08		g COD/g COD
Autotrophic Organisms: X_{AUT}				
Yield per NO_3-N	Y_A	0.19		g COD/g N
Fraction of Lysis Inerts	f_{XI}	0.08		g COD/g COD
Methanol Degraders-Population 1: X_{M1}				
Yield per MeOH COD	Y_{M1}	0.56		g COD/g COD
Fraction of Lysis Inerts	f_{XI}	0.10		g COD/g COD
Methanol Degraders-Population 2: X_{M2}				
Yield per MeOH COD	Y_{M2}	0.36		g COD/g COD
Fraction of Lysis Inerts	f_{XI}	0.10		g COD/g COD

Conversion Factors for Conservation Equatio		Value	Default	Units
Nitrogen Content of:	Check Delta	0.00		
Soluble Inert COD: S_I	i_{NSI}	0.0600	0.01	g N/g COD
Fermentable Substrate: S_F	i_{NSF}	0.0392	0.03	g N/g COD
Inert Particulate COD: X_I	i_{NXI}	0.0400	0.02	g N/g COD
Slowly Biodegradable Substrate: X_S	i_{NXS}	0.0392	0.04	g N/g COD
Biomass: X_H, X_{PAO}, X_{AUT}, X_{m1}, X_{m2}	i_{NBM}	0.0606	0.07	g N/g COD
Decay Products:, $X_{c,aa}$	i_{NXdaa}	0.0606	0.02	g N/g COD
Phosphorus Content of:	Check Delta	0.00		
Soluble Inert COD: S_I	i_{PSI}	0.0000	0.00	g P/g COD
Fermentable Substrate: S_F	i_{PSF}	0.0000	0.01	g P/g COD
Inert Particulate COD: X_I	i_{PXI}	0.0073	0.01	g P/g COD
Slowly Biodegradable Substrate: X_S	i_{PXS}	0.0053	0.01	g P/g COD
Biomass: X_H, X_{PAO}, X_{AUT}	i_{PBM}	0.0200	0.02	g P/g COD
Decay Products:, $X_{c,aa}$	i_{PXdaa}	0.0200	1.02	g P/g COD
TSS to COD Ratio for:				
Inert Particulate COD: X_I	i_{TSSXI}	0.7825	0.75	g TSS/g COD
Slowly Biodegradable Substrate: X_S	i_{TSSXS}	0.7825	0.75	g TSS/g COD
Biomass: X_H, X_{PAO}, X_{AUT}, X_{m1}, X_{m2}	i_{TSSBM}	0.7825	0.90	g TSS/g COD
Decay Products: $X_{c,aa}$	$i_{TSSXdaa}$	0.7825	0.75	g TSS/g COD

Nitrogen Ratio Adjustmen			Ratio
Fermentable Substrate: S_F	i_{NSF}	0.0392	
Slowly Biodegradable Substrate: X_S	i_{NXS}	0.0392	1.00
Alternate Nitrogen Ratio			
Fermentable Substrate: S_F	i_{NSF}	0.0534	
Slowly Biodegradable Substrate: X_S	i_{NXS}	0.0356	1.50

Kinetic Parameters		Unit	Typical Values 20 °C	10 °C	Temperature 14.0 deg. C
Hydrolysis of Particulate Substrate: X_S					
k_h	(Hydrolysis Rate)	1/day	3.00	2.00	2.35
η_{NO3}	(Anoxic Reduction Factor)		0.60	0.60	0.60
η_{fe}	(Anaerobic Reduction Factor)		0.40	0.40	0.40
K_{O2}	(Oxygen Inhibition)	g O_2/m^3	0.20	0.20	0.20
K_{NO3}	(Nitrate Inhibition)	g N/m^3	0.50	0.50	0.50
K_X	(Particulate Inhibition)	g COD/g COD	0.10	0.10	0.10
Hydrolysis of Decay Products: X_{daa}					
K_{hdaa}	(Hydrolysis Rate)	1/d	1.20		0.94
K_{O2Ydaa}	(Oxygen Inhibition	g O_2/m^3	0.10		0.10
$K_{NO3Ydaa}$	(Nitrate Inhibition	g N/m^3	0.10		0.10
K_{Xdaa}	(Particulate Inhibition)	g X_{daa}/g X_H	0.10		0.10
Heterotrophic Organisms: X_H					
μ_H	(Max Growth Rate)	1/day	6.00	3.00	2.60
q_{fe}	(Max Fermentation Rate)	g COD/(g COD*d)	3.00	1.50	1.98
η_{NO3}	(Anoxic Reduction Factor)		0.80	0.80	0.80
b_H	(Decay Rate)	1/day	0.40	0.20	0.50
K_{O2}	(Oxygen Inhibition)	g O_2/m^3	0.20	0.20	0.20
K_F	(Growth on S_F)	g COD/m^3	4.00	4.00	2.00
K_{fe}	(Fermentation of S_F)	g COD/m^3	4.00	4.00	4.00
K_A	(Growth on S_A)	g COD/m^3	4.00	4.00	2.00
K_{NO3}	(Anoxic Growth)	g N/m^3	0.50	0.50	0.50
K_{NH4}	(Nitrogen Inhibition)	g N/m^3	0.05	0.05	0.05
K_P	(Phosphorus Inhibition)	g P/m^3	0.01	0.01	0.01
K_{ALK}	(Alkalininty Inhibition)	mole HCO_3^-/m^3	0.10	0.10	0.10
Phosphorus Accumulating Organisms: X_{PAO}					
q_{PHA}	(X_{PHA} Storage Rate)	g X_{PHA}/(g X_{PAO}*d)	3.00	2.00	6.00
q_{PP}	(X_{PP} Storage Rate)	g X_{PP}/(g X_{PAO}*d)	1.50	1.00	1.18
μ_{PAO}	(Max Growth Rate)	1/day	1.00	0.67	0.79
η_{NO3}	(Anoxic Reduction Factor)		0.60	0.60	0.60
b_{PAO}	(X_{PAO} Decay Rate)	1/day	0.20	0.10	0.10
b_{PP}	(X_{PP} Decay Rate)	1/day	0.20	0.10	0.10
b_{PHA}	(X_{PHA} Decay Rate)	1/day	0.20	0.10	0.10
K_{O2}	(Oxygen Inhibition)	g O_2/m^3	0.20	0.20	0.20
K_{NO3}	(Anoxic Growth)	g N/m^3	0.50	0.50	0.50
K_A	(Growth on S_A)	g COD/m^3	4.00	4.00	2.00
K_{NH4}	(Nitrogen Inhibition)	g N/m^3	0.05	0.05	0.0050
K_{PS}	(Phosphorus Inhibition of PP)	g P/m^3	0.20	0.20	0.20
K_P	(Phosphorus Inhibition of Growth)	g P/m^3	0.01	0.01	0.0050
K_{ALK}	(Alkalininty Inhibition)	mole HCO_3^-/m^3	0.10	0.10	0.10
K_{PP}	(Polyphosphate Inhibition)	g X_{PP}/g X_{PAO}	0.01	0.01	0.02
K_{MAX}	(Max Ratio of X_{PP}/X_{PAO})	g X_{PP}/g X_{PAO}	0.34	0.34	0.34
K_{IPP}	(Inhibition of PP Storage)	g X_{PP}/g X_{PAO}	0.02	0.02	0.02
K_{PHA}	(Saturation for PHA)	g X_{PHA}/g X_{PAO}	0.01	0.01	0.01
Autotrophic Organisms: X_{AUT}					
μ_{AUT}	(Maximum Growth Rate)	1/day	1.00	0.35	0.42
b_{AUT}	(Decay Rate)	1/day	0.15	0.05	0.04
K_{O2}	(Oxygen Inhibition)	g O_2/m_3	0.50	0.50	0.50
K_{NH4}	(Nitrogen Inhibition: SUBSTRATE)	g N/m^3	1.00	1.00	0.49
K_{ALK}	(Alkalininty Inhibition)	mole HCO_3^-/m^3	0.50	0.50	0.01
K_P	(Phosphorus Inhibition of Growth)	g P/m^3	0.01	0.01	0.0050
Precipitation					
k_{PRE}	(Rate of Phosphorus Precipitation)	m^3/(g $Me(OH)_2$*d)	1.00	1.00	2.00
k_{RED}	(Rate of Phosphous Redissolution)	1/day	0.60	0.60	0.10
K_{ALK}	(Alkalininty Inhibition	mole HCO_3^-/m^3	0.50	0.50	0.50
Methanol Degrading Organisms - Population 1					
μ_{M1}	(Maximum Growth Rate	1/day	3.88		7.00
η_{NO3M1}	(Anoxic Reduction Factor		0.21		0.20
b_{M1}	(Decay Rate)	1/day	0.18		0.20
K_{O2M1}	(Oxygen Inhibition	g O_2/m^3	0.20		0.50
K_{M1}	(Growth on Methanol)	g COD/m^3	4.00		4.00
K_{NO3M1}	(Anoxic Growth	g N/m^3	0.50	0.50	0.80
K_{NH4M1}	(Nitrogen Inhibition	g N/m^3	0.05		0.05
K_{ALKM1}	(Alkalinity Inhibition	mole HCO_3^-/m^3	0.10		0.10
K_{PM1}	(Phosphorus Inhibition	g P/m^3	0.01		0.01
Methanol Degrading Organisms - Population 2					
μ_{M2}	(Maximum Growth Rate	1/day	1.72		7.00
η_{NO3M2}	(Anoxic Reduction Factor		0.76		0.80
b_{M2}	(Decay Rate)	1/day	0.25		0.25
K_{O2M2}	(Oxygen Inhibition	g O_2/m^3	0.20		0.50
K_{M2}	(Growth on Methanol)	g COD/m^3	4.00		1.00
K_{NO3M2}	(Anoxic Growth)	g N/m^3	0.50	0.50	0.50
K_{NH4M2}	(Nitrogen Inhibition)	g N/m^3	0.05		0.05
K_{ALKM2}	(Alkalinity Inhibition)	mole HCO_3^-/m^3	0.10		0.10
K_{PM2}	(Phosphorus Inhibition	g P/m^3	0.01		0.01

This document is the property of CH2M HILL, Inc.
The expression of the information contained in thi
document is protected under U.S. copyright law.

Mass Balance for Average Flow Conditions

Constituent	Raw Wastewater (RW)	Main Recycle Influent (RecyI)	Main Recycled Stream (Recycle)	Main Combined Recycle Effluent (RecyE)	Main Bioreactor Influent (BI)	Main Secondary Clarifier Influent (SI)	Main Secondary Clarifier Effluent (SE)	Plant Effluent (PLE)	Main WAS	GBT WAS Thickener Influent (TWASI)	GBT Thickened WAS (TWAS)	AerDig1 Aerobic Digester Influent (ADI)	AerDig1 Aerobic Digester Effluent (ADE)	BFP Dewatering Influent (DWI)	BFP Dewatered Sludge (DWE)	Biosolids to Dispoal	GBT WAS Thickening Recycle (TWASR)	BFP Dewatering Recycle (DWR)	Recy Combined Discharge	Ender
Flow (m3/day)	22,974	22,974	1,912	24,886	24,886	36,380	22,923	22,923	1,963	1,963	537	537	537	537	51	51	1,426	486	1,912	
Carbonaceous BOD_5 (kg/day)	18,367	18,367	861	19,228	19,228	36,218	108	108	5,267	5,267	4,476	4,476	1,400	1,400	1,330	1,330	791	70	861	
COD (kg/day)	36,029	36,029	2,827	38,856	38,856	108,795	1,383	1,383	15,667	15,667	13,263	13,263	8,018	8,018	7,596	7,596	2,404	422	2,827	
TSS (kg/day)	20,664	20,664	3,376	24,040	24,040	130,188	344	344	18,939	18,939	16,098	16,098	10,711	10,711	10,176	10,176	2,841	536	3,376	
VSS (kg/day)	15,498	15,498	1,926	17,424	17,424	75,386	199	199	10,967	10,967	9,322	9,322	5,629	5,629	5,347	5,347	1,645	281	1,926	
TKN (kg-N/day)	3,444	3,444	220	3,663	3,663	5,781	84	84	831	831	703	703	537	537	446	446	128	92	220	
NH_3-N (kg-N/day)	2,066	2,066	67	2,133	2,133	5	3	3	0	0	0	0	74	74	7	7	0	67	67	
NO_3-N (kg-N/day)	0	0	187	187	187	454	286	286	24	24	7	7	187	187	18	18	18	169	187	
TP (kg-P/day)	574	574	618	1,192	1,192	7,445	125	125	1,068	1,068	902	902	902	902	450	450	165	453	618	
Alkalinity (kg/day as $CaCO_3$)	22,959	22,959	1,018	23,977	23,977	25,965	16,361	16,361	1,401	1,401	383	383	0	0	0	0	1,018	0	1,018	
H_2S (kg/day)	551	551	0	551	551	0	0	0	0	0	0	0	0	0	0	0	0	0	0	
BOD_5 (mg/L)	799	799	450	773	773	996	5	5	2,683	2,683	8,342	8,342	2,610	2,610	26,148	26,148	554	144	450	
COD (mg/L)	1,568	1,568	1,478	1,561	1,561	2,990	60	60	7,982	7,982	24,716	24,716	14,942	14,942	149,293	149,293	1,686	870	1,478	
TSS (mg/L)	899	899	1,766	966	966	3,579	15	15	9,648	9,648	30,000	30,000	19,961	19,961	200,000	200,000	1,992	1,103	1,766	
VSS (mg/L)	675	675	1,008	700	700	2,072	9	9	5,587	5,587	17,372	17,372	10,490	10,490	105,103	105,103	1,153	579	1,008	
TKN (mg-N/L)	150	150	115	147	147	159	4	4	423	423	1,310	1,310	1,001	1,001	8,759	8,759	90	189	115	
NH_3-N (mg-N/L)	90	90	35	86	86	0	0	0	0	0	0	0	138	138	138	138	0	138	35	
NO_3-N (mg-N/L)	0	0	98	8	8	12	12	12	12	12	12	12	349	349	349	349	12	349	98	
TP (mg-P/L)	25	25	323	48	48	205	5	5	544	544	1,681	1,681	1,681	1,681	8,836	8,836	116	932	323	
Alkalinity (mg/L as CaCO3)	999	999	532	963	963	714	714	714	714	714	714	714	0	0	0	0	714	0	532	
H_2S (mg/L)	24	24	0	22	22	0	0	0	0	0	0	0	0	0	0	0	0	0	0	

Mass Balance for Diurnal Peak Flow Conditions

Constituent	Raw Wastewater (RW)	Main Recycle Influent (RecyI)	Main Recycled Stream (Recycle)	Main Combined Recycle Effluent (RecyE)	Main Bioreactor Influent (BI)	Main Secondary Clarifier Influent (SI)	Main Secondary Clarifier Effluent (SE)		Main WAS	GBT WAS Thickener Influent (TWASI)	GBT Thickened WAS (TWAS)	AerDig1 Aerobic Digester Influent (ADI)	AerDig1 Aerobic Digester Effluent (ADE)	BFP Dewatering Influent (DWI)	BFP Dewatered Sludge (DWE)		GBT WAS Thickening Recycle (TWASR)	BFP Dewatering Recycle (DWR)	Recy Combined Discharge	
Flow (m3/day)	32,853	32,853	2,953	35,805	35,805	58,779	32,778	32,778	3,028	3,028	790	790	790	790	75	75	2,238	715	2,953	
Carbonaceous BOD_5 (kg/day)	23,877	23,877	1,269	25,146	25,146	43,587	126	126	5,061	5,061	6,602	6,602	2,061	2,061	1,958	1,958	1,166	103	1,269	
COD (kg/day)	46,837	46,837	4,142	50,979	50,979	199,061	1,956	1,956	22,952	22,952	19,432	19,432	11,798	11,798	11,177	11,177	3,520	622	4,142	
TSS (kg/day)	26,862	26,862	4,968	31,830	31,830	239,979	656	656	27,869	27,869	23,688	23,688	15,761	15,761	14,973	14,973	4,180	788	4,968	
VSS (kg/day)	20,146	20,146	2,825	22,971	22,971	138,389	378	378	16,071	16,071	13,660	13,660	8,283	8,283	7,869	7,869	2,411	414	2,825	
TKN (kg/day)	4,477	4,477	367	4,844	4,844	10,334	147	147	1,186	1,186	1,002	1,002	791	791	656	656	184	135	367	
NH_3-N (kg-N/day)	2,686	2,686	101	2,787	2,787	64	36	36	3	3	1	1	109	109	10	10	2	99	101	
NO_3-N (kg-N/day)	0	0	274	274	274	656	366	366	34	34	9	9	275	275	26	26	25	249	274	
TP (kg-P/day)	746	746	942	1,688	1,688	15,507	194	194	1,783	1,783	1,507	1,507	1,328	1,328	662	662	276	666	942	
Alkalinity (kg/day as $CaCO_3$)	29,846	29,846	1,117	30,964	30,964	29,345	16,364	16,364	1,512	1,512	394	394	0	0	0	0	1,117	0	1,117	
H_2S (kg/day)	716	716	0	716	716	0	0	0	0	0	0	0	0	0	0	0	0	0	0	
BOD_5 (mg/L)	727	727	430	702	702	742	4	4	1,671	1,671	8,361	8,361	2,610	2,610	26,148	26,148	521	144	430	
COD (mg/L)	1,426	1,426	1,403	1,424	1,424	3,387	60	60	7,581	7,581	24,610	24,610	14,942	14,942	149,293	149,293	1,573	870	1,403	
TSS (mg/L)	818	818	1,683	889	889	4,083	20	20	9,204	9,204	30,000	30,000	19,961	19,961	200,000	200,000	1,868	1,103	1,683	
VSS (mg/L)	613	613	957	642	642	2,354	12	12	5,308	5,308	17,300	17,300	10,490	10,490	105,103	105,103	1,077	579	957	
TKN (mg-N/L)	136	136	124	135	135	176	4	4	392	392	1,269	1,269	1,001	1,001	8,759	8,759	82	189	124	
NH_3-N (mg-N/L)	82	82	34	78	78	1	1	1	1	1	1	1	138	138	138	138	1	138	34	
NO_3-N (mg-N/L)	0	0	93	8	8	11	11	11	11	11	11	11	349	349	349	349	11	349	93	
TP (mg-P/L)	0	23	319	47	47	264	6	6	589	589	1,909	1,909	1,681	1,681	8,836	8,836	123	932	319	
Alkalinity (mg/L as CaCO3)	908	908	378	865	865	499	499	499	499	499	499	499	0	0	0	0	499	0	378	
H_2S (mg/L)	22	22	0	20	20	0	0	0	0	0	0	0	0	0	0	0	0	0	0	

This document is the property of CH2M HILL, Inc.
The expression of the information contained in this
document is protected under U.S. copyright law.

Aerobic Digester Module

Average Conditions

Constituent	Influent	Effluent
Flow (m3/day)	537	537
Carbonaceous BOD_5 (kg/day)	4,476	1,400
Particulate	459	857
Heterotrophs	3,173	385
PAOs	844	158
PHA	0	0
Filtrate	0	0
COD (kg/day)	13,263	8,018
Particulate Bio	336	0
Particulate Non-Bio	4,529	4,529
Decay Prod Aer/Anx	419	1,584
Decay Prod Anaerobic	0	0
Heterotrophs	5,275	712
Autotrophs	347	165
PAOs	2,330	1,002
PHA	1	0
Soluble Bio	0	0
VFA	0	0
Colloidal Bio	0	0
Soluble Non-Bio	25	25
Colloidal Non-Bio	0	0
TSS (kg/day)	16,098	10,711
Biodegradable	263	0
Non-Biodegradable	7,032	7,032
Decay Prod Aer/Anx	328	1,239
Decay Prod Anaerobic	0	0
Metal Hydroxide	0	0
Metal Phosphate	0	0
Heterotrophs	4,127	557
Autotrophs	272	129
PAOs	1,823	784
PHA	0	0
Poly-P	2,253	969
VSS (kg/day)	9,322	5,629
Biodegradable	237	0
Non-Biodegradable	3,190	3,190
Decay Prod Aer/Anx	295	1,115
Decay Prod Anaerobic	0	0
Metal Hydroxide	0	0
Heterotrophs	3,715	502
Autotrophs	245	116
PAOs	1,641	706
PHA	0	0
TKN (kg-N/day)	703	537
NH_3-N (kg-N/day)	0	74
Particulate Bio Org N	13	0
Non-Bio Part Org N	181	252
Decay Prod Aer/Anx	25	96
Decay Prod Anaerobic	0	0
Heterotrophs	319	43
Autotrophs	21	10
PAOs	141	61
Non-Bio Soluble Org. N	2	2
Non-Bio Colloidal Org. N	0	0
Soluble Bio Org N	0	0
Colloidal Bio Org N	0	0
NO_x-N (kg-N/day)	7	187
TP (kg-P/day)	902	902
Bio Particulate	2	0
Non-Bio Particulate	33	56
Decay Prod Aer/Anx	8	32
Decay Prod Anaerobic	0	0
Metal Phosphate	0	0
Heterotrophs	105	14
Autotrophs	7	3
PAOs	47	20
Poly-P	697	300
Ortho-PO_4	2	477
Alkalinity (kg/day as $CaCO_3$)	383	0
H_2S (kg/day)	0	0
BOD_5 (mg/L)	8,342	2,610
COD (mg/L)	24,716	14,942
TSS (mg/L)	30,000	19,961
VSS (mg/L)	17,372	10,490
TKN (mg-N/L)	1,310	1,001
NH_3-N (mg-N/L)	0	138
NO_3-N (mg-N/L)	12	349
TP (mg-P/L)	1,681	1,681
Alkalinity (mg/L as CaCO3)	714	0
H_2S (mg/L)	0	0

Constituent	Influent	Effluent
Flow (m3/day)	537	537
Carbonaceous BOD_5 (kg/day)	4,476	1,400
Particulate	459	857
Heterotrophs	3,173	385
PAOs	844	158
PHA	0	0
Filtrate	0	0
COD (kg/day)	13,263	8,018
Particulate Bio	336	0
Particulate Non-Bio	4,529	4,529
Decay Prod Aer/Anx	419	1,584
Decay Prod Anaerobic	0	0
Heterotrophs	5,275	712
Autotrophs	347	165
PAOs	2,330	1,002
PHA	1	0
Soluble Bio	0	0
VFA	0	0
Colloidal Bio	0	0
Soluble Non-Bio	25	25
Colloidal Non-Bio	0	0
TSS (kg/day)	16,098	10,711
Biodegradable	263	0
Non-Biodegradable	7,032	7,032
Decay Prod Aer/Anx	328	1,239
Decay Prod Anaerobic	0	0
Metal Hydroxide	0	0
Metal Phosphate	0	0
Heterotrophs	4,127	557
Autotrophs	272	129
PAOs	1,823	784
PHA	0	0
Poly-P	2,253	969
VSS (kg/day)	9,322	5,629
Biodegradable	237	0
Non-Biodegradable	3,190	3,190
Decay Prod Aer/Anx	295	1,115
Decay Prod Anaerobic	0	0
Metal Hydroxide	0	0
Heterotrophs	3,715	502
Autotrophs	245	116
PAOs	1,641	706
PHA	0	0
TKN (kg-N/day)	703	537
NH_3-N (kg-N/day)	0	74
Particulate Bio Org N	13	0
Non-Bio Part Org N	181	252
Decay Prod Aer/Anx	25	96
Decay Prod Anaerobic	0	0
Heterotrophs	319	43
Autotrophs	21	10
PAOs	141	61
Non-Bio Soluble Org. N	2	2
Non-Bio Colloidal Org. N	0	0
Soluble Bio Org N	0	0
Colloidal Bio Org N	0	0
NO_x-N (kg-N/day)	7	187
TP (kg-P/day)	902	902
Bio Particulate	2	0
Non-Bio Particulate	33	56
Decay Prod Aer/Anx	8	32
Decay Prod Anaerobic	0	0
Metal Phosphate	0	0
Heterotrophs	105	14
Autotrophs	7	3
PAOs	47	20
Poly-P	697	300
Ortho-PO_4	2	477
Alkalinity (kg/day as $CaCO_3$)	383	0
H_2S (kg/day)	0	0

Facility Operating Parameters		
Bioreactor Volume, m3		16,536.67
Minimum Valid SRT, days		3.00
SRT, Days		30.82
Temperature, oC		14
Volatile Solids Loading (kg VSS/m3-day)		0.56
Volatile Solids Reduction, %		39.62%
TSS Reduction %		33.46%
SOUR mg-O2/(g-VSS x hour) at 20 oC		1.24
SOUR mg-O2/(g-TSS x hour) at 20 oC		0.65
SOUR mg-O2/(g-VSS x hour) with nitrification at 20 oC		1.74
SOUR mg-O2/(g-TSS x hour) with nitrification at 20 oC		0.91
Total AOR (kgO2/day)		6,156
% denitrification		20%
Nutrients		
Nitrogen Released Due to Digestion (transformed to NH3) (kg/day)		301.43
Nitrogen Nitrified (Kg/day)		227.31
Nitrogen Denitrified (Kg/day)		46.80
Alkalinity in Feed (Kg/day)		383
Alkalinity Released Due to Digestion (Kg/day)		1,085
Alkalinity Lost Through Nitrification (Kg/day)		1,637
Alkalinity Produced Through Denitrification (Kg/day)		168
Alkalinity Discharged (Kg/day)		0
Kinetic Limitation on Nitrification		
DO, mg/L		2
Maximum Specific Growth Rate ($m\mu_{NOX}$), Day^{-1} at Operational DO		0.3408
Ammonia in Digester Effluent Due to Kinetic Limitations		
	a	0.26
	b	-1,298.70
	c	21.34
Effluent Ammonia (mg-N/L) for Kinetic Limitation		0.02
Potential Nitrification Associated with Kinetics (Kg/day)		301.50

Aerobic Biological Kinetics	
Parameter	**Temperature**
Heterotrophs	
Maximum Specific Growth Rate ($m\mu_{max}$), Day^{-1}	2.60
Half Saturation for Organics (K_s), mg BOD_5/L	3.13
Half Saturation for Organics (K_s), mg Bio COD/L	5.00
True Yield (Y_H), mg COD/mg COD (aerobic)	0.67
Decay Rate (b_H), Day^{-1}	0.22
Inactive Fraction (f_D)	0.19
Volatile Fraction, % of TSS	0.90
COD/VSS Ratio, mg COD/mg VSS	1.42
Nitrogen Content, N/VSS (%)	0.09
Phosphorus Content, P/VSS (%)	0.03
Autotrophs	
Maximum Specific Growth Rate ($m\mu_{max}$), Day^{-1}	0.43
Half Saturation for NH_3-N (K_N), mg-N/L	0.49
Half Saturation for O_2 (K_O), mg-O_2/L	0.50
True Yield (Y_A), mg TSS/mg NH_3-N	0.15
True Yield (Y_A), mg COD/mg NH_3-N	0.19
Decay Rate (b_A), Day^{-1}	0.04
Volatile Fraction, % of TSS	0.90
COD/VSS Ratio, mg COD/mg VSS	1.42
Nitrogen Content, N/VSS (%)	0.09
Phosphorus Content, P/VSS (%)	0.03
PAOs	
True Yield (Y_P), mg TSS/mg BOD_5	0.76
True Yield (Y_P), mg COD/mg COD	0.62
Decay Rate (b_H), Day^{-1}	0.04
Inactive Fraction (f_D)	0.19
Volatile Fraction, % of TSS	0.90
COD/VSS Ratio, mg COD/mg VSS	1.42
Nitrogen Content, N/VSS (%)	0.09
Phosphorus Content, P/VSS (%)	0.03
TSS Content of Poly-P	3.23

This document is the property of CH2M HILL, Inc.
The expression of the information contained in this
document is protected under U.S. copyright law.

Diurnal Peak Flow Conditions

Constituent	Influent	Effluent
Flow (m3/day)	790	790
Carbonaceous BOD_5 (kg/day)	6,602	2,061
Particulate	2,300	1,261
Heterotrophs	3,157	567
PAOs	1,144	233
PHA	1	0
Filtrate	0	0
COD (kg/day)	19,432	11,798
Particulate Bio	435	0
Particulate Non-Bio	6,803	6,664
Decay Prod Aer/Anx	3,379	2,331
Decay Prod Anaerobic	0	0
Heterotrophs	5,247	1,048
Autotrophs	373	243
PAOs	3,160	1,475
PHA	2	0
Soluble Bio	0	0
VFA	0	0
Colloidal Bio	0	0
Soluble Non-Bio	34	37
Colloidal Non-Bio	0	0
TSS (kg/day)	23,688	15,761
Biodegradable	340	0
Non-Biodegradable	9,929	10,347
Decay Prod Aer/Anx	2,644	1,824
Decay Prod Anaerobic	0	0
Metal Hydroxide	0	0
Metal Phosphate	0	0
Heterotrophs	4,106	820
Autotrophs	292	190
PAOs	2,472	1,154
PHA	1	0
Poly-P	3,904	1,426
VSS (kg/day)	13,660	8,283
Biodegradable	306	0
Non-Biodegradable	4,791	4,693
Decay Prod Aer/Anx	2,379	1,641
Decay Prod Anaerobic	0	0
Metal Hydroxide	0	0
Heterotrophs	3,695	738
Autotrophs	262	171
PAOs	2,225	1,039
PHA	1	0
TKN (kg-N/day)	1,002	791
NH_3-N (kg-N/day)	1	109
Particulate Bio Org N	26	0
Non-Bio Part Org N	272	370
Decay Prod Aer/Anx	169	141
Decay Prod Anaerobic	272	0
Heterotrophs	318	63
Autotrophs	23	15
PAOs	191	89
Non-Bio Soluble Org. N	2	2
Non-Bio Colloidal Org. N	0	0
Soluble Bio Org N	0	0
Colloidal Bio Org N	0	0
NO_3-N (kg-N/day)	9	275
TP (kg-P/day)	1,507	1,328
Bio Particulate	9	0
Non-Bio Particulate	43	83
Decay Prod Aer/Anx	68	47
Decay Prod Anaerobic	0	0
Metal Phosphate	0	0
Heterotrophs	105	21
Autotrophs	7	5
PAOs	63	29
Poly-P	1,209	441
Ortho-PO_4	4	701
Alkalinity (kg/day as $CaCO_3$)	394	0
H_2S (kg/day)	0	0
BOD_5 (mg/L)	8,361	2,610
COD (mg/L)	24,610	14,942
TSS (mg/L)	30,000	19,961
VSS (mg/L)	17,300	10,490
TKN (mg-N/L)	1,269	1,001
NH_3-N (mg-N/L)	1	138
NO_3-N (mg-N/L)	11	349
TP (mg-P/L)	1,909	1,681
Alkalinity (mg/L as CaCO3)	499	0
H_2S (mg/L)	0	0

This document is the property of CH2M HILL, Inc.
The expression of the information contained in this
document is protected under U.S. copyright law.

Appendix C

Technical Memorandum

Conceptual Design for New Wastewater Treatment Facility (including Baqa'a Wastewater Treatment Facility for Year 2028)

Conceptual Design for WWTP Serving Selected Alternative Study Area and All Baqa'a WWTP Flow with 2028 Projected Flows and Loads

PREPARED FOR: Water Authority of Jordan

PREPARED BY: CH2M HILL

COPIES: File

DATE: January 17, 2009

During November 2008, the Water Authority of Jordan requested that CH2M HILL evaluate preliminary design and cost considerations for the construction of a wastewater treatment plant (WWTP) to treat projected flow for the selected alternative study area and the Baqa'a WWTP service area for 2028. CH2M HILL developed a computer-based biological process model for equipment sizing and developed associated cost estimates. This technical memorandum (TM) presents the results of the examination described above. For the purposes of this TM, the referenced facility is described as the "2028 Selected Alternative with Baqa'a Plant WWTP."

Design Conditions

Projected 2028 flow and loading values were used during computer-based biological process modeling of the 2028 Selected Alternative with Baqa'a Plant WWTP, and are presented in Table 1. Both projected 2028 average day and maximum month flow and loading conditions are shown. Average daily loading conditions were based on 2007 influent contaminant concentration data from the Salt WWTP. Maximum month flow and loading values were estimated by multiplying average daily flow and loading values by a peaking factor of 1.4.

TABLE 1
2028 Selected Alternative with Baqa'a Plant Projected Influent Flow and Loading

	Average Day Design		Maximum Month Design	
Parameter	**(m^3/day, kg/day)**	**(gpd, lbs/day)**	**(m^3/day, kg/day)**	**(gpd, lbs/day)**
Flow	32,003	8,456,000	44,804	11,838,400
COD	42,263	93,090	59,168	130,327
BOD	25,614	56,418	35,860	78,986
TSS	28,816	63,471	40,342	88,859
TKN	4,803	10,578	6,724	14,810
NH_3	2,882	6,347	4,034	8,886

COPYRIGHT 2009 BY CH2M HILL, INC. • COMPANY CONFIDENTIAL

TABLE 1
2028 Selected Alternative with Baqa'a Plant Projected Influent Flow and Loading

	Average Day Design		Maximum Month Design	
Parameter	**(m^3/day, kg/day)**	**(gpd, lbs/day)**	**(m^3/day, kg/day)**	**(gpd, lbs/day)**
TP	800	1,763	1,121	2,468

Table 2 presents goals for plant effluent contaminant concentrations used during biological process modeling. In general, plant effluent contaminant concentration goals used during wastewater process model development were 70% of the effluent contaminant concentration limits provided by the Water Authority of Jordan in order to provide a safety factor in biological process reactor and equipment sizing. Values shown in Table 2 are the same as those used during the development of biological process models for the "Conceptual Report for Wastewater Treatment Feasibility Study in Jordan."

TABLE 2
Effluent Contaminant Limits and Goals for Process Modeling

Parameter	Effluent Limit (mg/L)
Total Suspended Solids	60.0
Biochemical Oxygen Demand ($CBOD_5$)	60.0
Chemical Oxygen Demand (COD)	150
Total Nitrogen (TN)	70.0
Nitrate (NO_3-N)	18.0
Total Phosphorus (TP)	15.0

Estimated Equipment Sizing and Mass Balance

Table 3 presents the types of equipment utilized during development of the biological process models and wastewater treatment facility cost estimates for this TM.

TABLE 3
Proposed Equipment Types

Unit Process	Description
Influent Pumps	Submersible
Screening	Mechanical Bar Screen
Grit Removal	Vortex Grit Removal
Process Reactors	MLE, Concrete
Nitrified Recycle Pumps	Axial-Flow

COPYRIGHT 2009 BY CH2M HILL, INC. • COMPANY CONFIDENTIAL

TABLE 3
Proposed Equipment Types

Unit Process	Description
Anoxic Basin Mixing	Submersible Mixers
Blowers (Process Reactors)	Multi-stage centrifugal with fine-bubble membrane diffusers
Clarifiers	Center-feed circular
RAS Pumping	Submersible
WAS Pumping	Submersible
WAS Thickening	Gravity Belt Thickeners
Thickened Sludge Pumping	Progressing Cavity
Aerobic Digesters	Concrete
Blowers (Aerobic Digester)	Multi-stage centrifugal
Dewatering Feed Pumps	Progressing Cavity
Dewatering Method	Belt Filter Presses

Table 4 presents estimated equipment sizing for the 2028 Selected Alternative with Baqa'a Plant WWTP based on results from biological process modeling.

TABLE 4
2028 Selected Alternative with Baqa'a Plant WWTP – Estimated WWTP Sizing

	SI Units	Standard Units
Influent Pumps	5 @ 17,800 L/min each (duty), 1 @ 17,800 L/min (standby)	5 @ 4,710 gpm each (duty), 1 @ 4,710 gpm (standby)
Screening	1 @ 128,500 m3/day (duty), 1 @ 128,500 m3/day (standby)	1 @ 33.9 mgd (duty), 1 @ 33.9 mgd (standb
Grit Removal	1 @ 128,500 m3/day (duty), 1 @ 128,500 m3/day (standby)	1 @ 33.9 mgd (duty), 1 @ 33.9 mgd (standb
Process Reactors	10 trains @ 10,500 m3 each (105,000 m3 total)	10 trains @ 2.77 MG each (27.7 MG total)
Nitrified Recycle Pumps	6 @ 35,200 L/min each	6 @ 9,300 gpm each
Submersible Mixers	2 / train (6 total)	
Blowers (Process Reactors)	10 @ 8,100 N*m3/hr each (duty), 1 @ 8,100 N*m3/hr (standby)	10 @ 4,770 scfm each (duty) 1 @ 4,770 scf (standby)
Clarifiers	3 @ 733.9 m2 each	3 @ 7,900 ft2 each
RAS Pumping	4 @ 7,800 gpm each (duty), 1 @ 7,800 gpm (standby)	4 @ 2,060 gpm each (duty), 1 @ 2,060 gpm (standby)
WAS Thickener Feed Pumping	2 @ 203,700 L/hr (duty), 1 @ 203,700 L/hr	2 @ 53,800 gph each (duty), 1 @ 53,800 gp

COPYRIGHT 2009 BY CH2M HILL, INC. • COMPANY CONFIDENTIAL

TABLE 4
2028 Selected Alternative with Baqa'a Plant WWTP – Estimated WWTP Sizing

	SI Units	Standard Units
Influent Pumps	5 @ 17,800 L/min each (duty), 1 @ 17,800 L/min (standby)	5 @ 4,710 gpm each (duty), 1 @ 4,710 g (standby)
Screening	1 @ 128,500 m3/day (duty), 1 @ 128,500 m3/day (standby)	1 @ 33.9 mgd (duty), 1 @ 33.9 mgd (sta
Grit Removal	1 @ 128,500 m3/day (duty), 1 @ 128,500 m3/day (standby) (standby)	1 @ 33.9 mgd (duty), 1 @ 33.9 mgd (stan (standby)
WAS Thickening	2 @ 2,963 m3/day (duty), 1 @ 2,963 m3/day (standby)	2 @ 782,500 gpd each (duty), 1 @ 782,5 (standby)
Thickened Sludge Pumping	2 @ 48,300 L/hr (duty), 1 @ 48,300 L/hr (standby)	2 @ 12,750 gph each (duty), 1 @ 12,750 (standby)
Aerobic Digesters	32,439 m3	8.57 MG
Blowers (Aerobic Digester)	8 @ 8,840 N*m3/hr each (duty), 1 @ 8,840 N*m3/hr (standby)	8 @ 5,200 scfm each (duty) 1 @ 5,200 s (standby)
Dewatering Feed Pumps	4 @ 101.1 m3/hr each (duty), 1 @ 101.1 m3/hr (standby)	4 @ 26,700 gph each (duty), 1 @ 26,700 (standby)
Dewatering Method	Belt Filter Presses - 8 @ 24,250 L/hr each (duty)	Belt Filter Presses - 8 @ 6,400 gph each

A mass balance analysis was also performed for the 2028 Selected Alternative with Baqa'a Plant WWTP. Figure 1 shows a process schematic for the 2028 Selected Alternative with Baqa'a Plant WWTP, with corresponding values from the maximum month design mass balance analysis shown in Table 5.

COPYRIGHT 2009 BY CH2M HILL, INC. • COMPANY CONFIDENTIAL

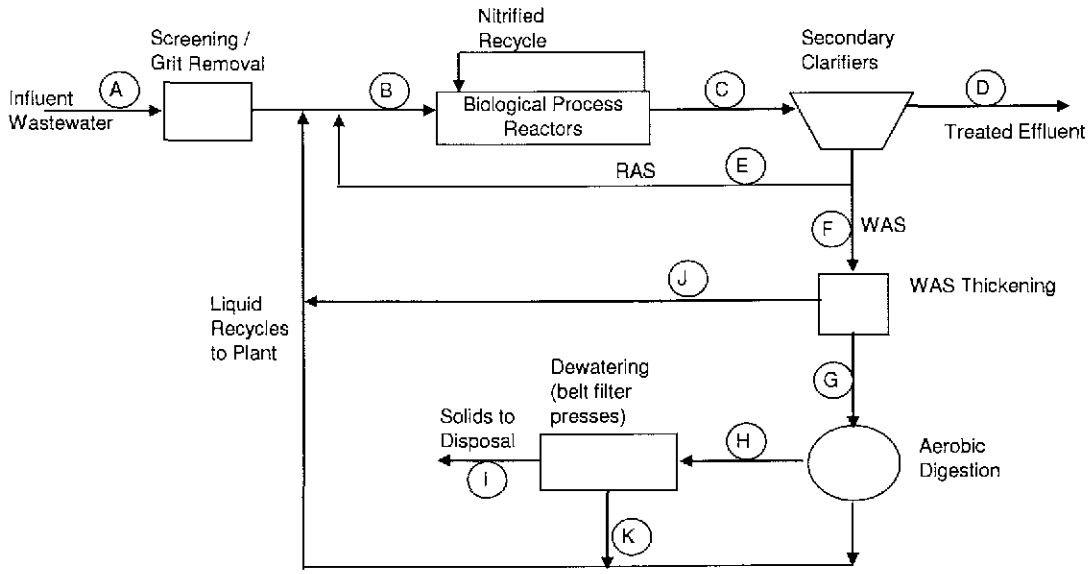

FIGURE 1
Process Schematic for 2028 Selected Alternative with Baqa'a Plant WWTP

TABLE 5
Mass Balance for 2028 Selected Alternative with Baqa'a Plant WWTP

		BOD_5		TSS	
Flow Stream Identification	**Flow (m3/day)**	**kg/day**	**mg/L**	**kg/day**	**mg/L**
Main Process Streams					
A - Influent Wastewater	44,812	35,828	800	40,306	900
B - Biological Process Reactor Influent	48,554	37,507	772	46,892	966
C - Biological Process Reactor Effluent	70,977	70,456	993	253,280	3,568
D - Secondary Clarifier Effluent	44,713	211	5	671	15
Solids Process Streams					
E - Return Activated Sludge	22,428			215,713	9,618
F - Waste Activated Sludge	3,841			36,946	9,618
G - Thickened WAS	1,047			31,404	30,000
H - Digested Sludge	804			24,123	30,000
I - Dewatered Sludge	115			22,917	200,000
J - WAS Thickener Centrate	2,795			5,542	1,983
K - Dewatering Centrate	1,095			1,206	1,102

COPYRIGHT 2009 BY CH2M HILL, INC. • COMPANY CONFIDENTIAL

Cost Estimates

Based on the computer-based wastewater process design models developed for estimated sizing of the 2028 Selected Alternative with Baqa'a Plant WWTP, preliminary construction cost and operation and maintenance cost estimates were developed. Estimated costs are presented in this section of the TM, with subsections for estimated construction cost and estimated annual operation and maintenance costs and net present value.

Construction Cost Estimate

Several assumptions were made during the development of the construction cost estimate, including the following:

- Markups were included:
  - Contractor Overhead and Profit (17%)
  - Contractor Mobilization / Demobilization (3%)
  - Contractor Bonds and Insurance (2.7%)
  - Contingency (20%)
- Taxes were included at 7% of the total estimated cost after allowances and markups.
- Construction cost estimates were initially performed in 2008 US dollars, and were converted to 2008 Jordan Dinars based on the conversion rate at 12 noon, September 15, 2008 (1 JOD = 1.41 USD).
- An allowance of JOD 1,500,000 for land acquisition was included based on unit pricing derived from a land acquisition estimate of JOD 1,500,000 for 50,000 square meters.

The estimated construction costs for the 2028 Selected Alternative with Baqa'a Plant WWTP are shown in Table 6.

TABLE 6
Estimated Construction Cost for 2028 Selected Alternative with Baqa'a Plant WWTP

Unit Process	Capital Cost Estimate
Raw Capital Cost	JOD 27,000,000
Markups	JOD 6,000,000
Contingencies	JOD 6, 500,000
Land Acquisition Allowance	JOD 1,500,000
Total Estimated Capital Cost	**JOD 41,000,000**

COPYRIGHT 2009 BY CH2M HILL, INC. • COMPANY CONFIDENTIAL

Operation and Maintenance Cost Estimate and Net Present Value

Several assumptions were made during the development of the operations and maintenance cost estimates, including the following:

- Electricity costs were established at JOD 41 per 1000 kilowatts (kW), or 0.06 USD per kW.
- Based on magnitude of influent flow and complexity of operations, it was assumed that the 2028 Selected Alternative and Baqa'a Plant WWTP would be staffed by about 60 full-time employees.
- For the purposes of operation and maintenance cost development, it was assumed that employees would be paid as per rates given in the main feasibility study report
- The annualized operation and maintenance cost for the 2028 Selected Alternative with Baqa'a Plant WWTP was developed based on design flows and a 20-year net present value analysis. For this analysis, an annual discount rate of 6.0% was used, along with an annual inflation rate of 3.0%.

With the assumptions stated above, the estimated annual operation and maintenance cost for the 2028 Selected Alternative with Baqa'a Plant WWTP is JOD 1,200,000.

The 20-year Net Present Value (NPV) for the 2028 Selected Alternative with Baqa'a Plant WWTP was developed using the annual discount rate and annual inflation rate listed above. Additionally, the construction cost estimate was used without escalation in the NPV analysis. The construction cost estimate, NPV of estimated annual operation and maintenance costs, and resulting total NPV are presented in Table 7.

TABLE 7
2028 Selected Alternative with Baqa'a Plant WWTP Net Present Value

Description	Estimated Value
Total Estimated Construction Cost	JOD 41,000,000
NPV of Annual O&M	JOD 17,000,000
Total 20-Year NPV	**JOD 58,000,000**

COPYRIGHT 2009 BY CH2M HILL, INC. • COMPANY CONFIDENTIAL

Attachment A

Model Results Summary for 2028 Selected Alternative with Baqa'a Plant WWTP

Projected 2028 Average Daily Flow = 32,010 m^3/day

Projected 2028 Maximum Month Flow = 44,812 m^3/day

Estimated Equipment Sizing:

- 10 process reactors at 10,486 m^3 each
- 3 circular clarifiers at 31 m diameter each
- 32,419 m^3 total aerobic digester volume

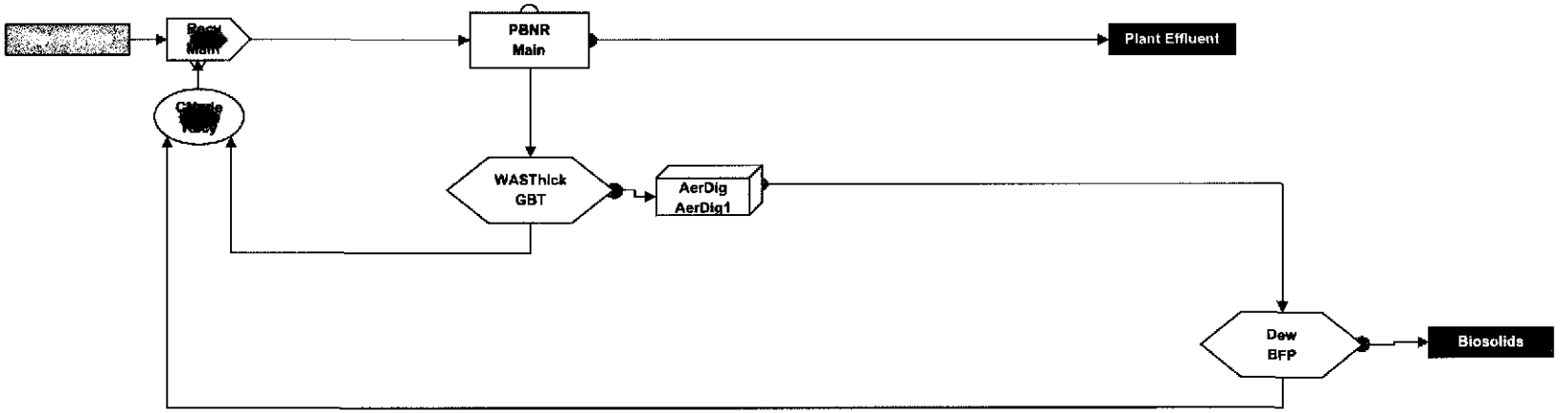

This document is the property of CH2M HILL, Inc.
The expression of the information contained in this
document is protected under U.S. copyright law.

Use Instructions: See Comment in this cell.

Linked Model Input	Current Run:	Comments	Scenarios: Max Month (winter)	Comments	Max Month (summer)	Comments	Average Day	Comments	For Class 1 Reliability	Comments
Flow (m3/day)	44,812	2028 MM	44,812	2028 MM	44,812	2028 MM	32,010	2028 AD	33,609	75% of MM
Diurnal Flow Peaking Factor	1.43	MxD:MM	1.43	MxD:MM	1.43	MxD:MM	2	MxD:MM	1.43	MxD:MM
CBOD5 (kg/day)	35,827	MM loading	35,827	MM loading	35,827	MM loading	25,591	AD Loading	26,870	75% of MM
TSS (kg/day)	40,306	MM loading	40,306	MM loading	40,306	MM loading	28,790	AD Loading	30,229	75% of MM
% VS	75%		75%		75%		75%		75%	
TKN (kg/day)	6718	MM loading	6718	MM loading	6718	MM loading	4798	AD Loading	5038	75% of MM
Ammonia -N (kg/day)	4,031	MM loading	4,031	MM loading	4,031	MM loading	2,879	AD Loading	3,023	75% of MM
Total Phosphate - P (kg/day)	1,119	MM loading	1,119	MM loading	1,119	MM loading	800	AD Loading	840	75% of MM
Alkalinity (kg/day)	44782	Assumed at 1000 mg/L	44782	Assumed at 1000 mg/L	44782	Assumed at 1000 mg/L	31989	Assumed at 1000 mg/L	33587	Assumed at 1000 mg/L
Hydrogen Sulfide (kg/day)	1,075	Assumed at 24 mg/L	1,075	Assumed at 24 mg/L	1,075	Assumed at 24 mg/L	768	Assumed at 24 mg/L	806	Assumed at 24 mg/L
Number of Aeration Basin Trains Online	10		10		10		10		10	
Volume per Train (m3)	10,486		10,486		10,486		10,486		10,486	
Total Aeration Basin Volume in Service (m3)	104,857		104,857		104,857		104,857		104,857	
SRT	10		10		10		10		10	
System pH	7.2		7.2		7.2		7.2		7.2	
Temperature °C	14	Minimum Month	14	Minimum Month	24.6	Maximum Month	16.8	Annual Average	14	Minimum Month
Nitrified Recycle Rate (% of Aer Basin influent flow)	625%		625%		625%		595%		605%	
Number of Secondary Clarifiers Online	3		3		3		3		3	
Surface Area per Secondary Clarifier (sq m)	734		734		734		734		734	
Total Secondary Clarifier Area (sq m)	2202		2202		2202		2202		2202	
Secondary Clarifier Diameter (m)	31		31		31		31		31	
SVI (mL/g)	150		150		150		150		150	
Average Secondary Effluent TSS (mg/L)	15	Fixed	15	Fixed	15	Fixed	15	Fixed	15	Fixed
Peak Secondary Effluent TSS (mg/L)	20	Fixed	20	Fixed	20	Fixed	20	Fixed	20	Fixed
Average RAS Underflow Rate (% of Inf Q)	46.1%	Calculated	46.1%	Calculated	46.1%	Calculated	44.5%	Calculated	44.8%	Calculated
Peak RAS Underflow Rate (% of Inf Q)	64.1%	Calculated	64.1%	Calculated	63.8%	Calculated	46.6%	Calculated	62.5%	Calculated
Thickener Solids Capture (%)	85%		85%		85%		85%		85%	
Thickened Sludge Concentration (mg/L)	30,000		30,000		30,000		30,000		30,000	
AerDig1 Volume (m3)	32,419		32,419		32,419		32,419		32,419	
AerDig1 Temperature (°C)	14	Minimum Month	14	Minimum Month	24.6	Maximum Month	16.8	Annual Average	14	Minimum Month
AerDig1 DO (mg/L)	2		2		2		2		2	
AerDig1 % Denitrification	20%		20%		20%		20%		20%	
Dewatering Solids Capture (%)	95%		95%		95%		95%		95%	
Dewatered Sludge Concentration (%)	20%		20%		20%		20%		20%	
Results										
SRT	10.0		10.0		10.0		10.0		10.0	
Final Anoxic Zone NO3	0.13	want < 0.5	0.13	want < 0.5	0.05	want < 0.5	0.08	want < 0.5	0.11	want < 0.5
Secondary Effluent TSS (mg/L)	15.0	want < 60 (goal = 42)	15.0	want < 60 (goal = 42)	15.0	want < 60 (goal = 42)	15.0	want < 60 (goal = 42)	15.0	want < 60 (goal = 42)
Secondary Effluent CBOD5 (mg/L)	4.73	want < 60 (goal = 42)	4.73	want < 60 (goal = 42)	4.15	want < 60 (goal = 42)	4.47	want < 60 (goal = 42)	4.62	want < 60 (goal = 42)
Secondary Effluent COD (mg/L)	60.3	want < 150, (goal = 105.0)	60.3	want < 150, (goal = 105.0)	59.8	want < 150, (goal = 105.0)	60.0	want < 150, (goal = 105.0)	60.2	want < 150, (goal = 105.0)
Secondary Effluent TN (mg/L)	16.1	want < 70, (goal = 49.0)	16.1	want < 70, (goal = 49.0)	16.1	want < 70, (goal = 49.0)	16.2	want < 70, (goal = 49.0)	16.1	want < 70, (goal = 49.0)
Secondary Effluent NH3-N (mg/L)	0.15		0.15		0.08		0.09		0.15	
Secondary Effluent NO3-N (mg/L)	12.472	want < 18 (goal is 12.6)	12.472	want < 18 (goal is 12.6)	12.497	want < 18 (goal is 12.6)	12.602	want < 18 (goal is 12.6)	12.490	want < 18 (goal is 12.6)
Secondary Effluent TP (mg/L)	5.51	want < 15 (goal = 10.5)	5.52	want < 15 (goal = 10.5)	1.91	want < 15 (goal = 10.5)	5.41	want < 15 (goal = 10.5)	6.58	want < 15 (goal = 10.5)
Influent CQD (mg/L)	1,568	~1320 mg/L per ops data	1,568	~1320 mg/L per ops data	1,568	~1320 mg/L per ops data	1,568	~1320 mg/L per ops data	1,568	~1320 mg/L per ops data
Corresponding Average MLSS (mg/L)	3,588	want < 3600 at MM	3,588	want < 3600 at MM	3,560	want < 3600 at MM	2,603	want < 3600 at MM	2,720	want < 3600 at MM
Secondary Influent MLSS (mg/L)	3,569		3,569		3,539		2,585		2,702	
Nitrified Recycle Rate (m3/day)	303,428		303,428		303,431		213,863		226,918	
Solids Loading Rate To Secondary Clarifiers (lbs/day-sqft)	23.56	want < 24	23.56	want < 24	23.36	want < 24	12.49	want < 24	13.65	want < 24
RAS Rate (m3/day)	22,425		22,410		22,410		16,008		16,809	
Corresponding WAS (kg/day)	36,947		36,952		36,653		26,815		28,016	
Combined Thickened Feed Sludge to Aerobic Dig. (kg/day)	31,405		31,409		31,155		22,793		23,813	
Digester Volatile Solids Loading Rate (kg/day-m3)	0.56		0.56		0.52		0.39		0.42	
Digester SRT	30.97		30.96		31.22		42.67		40.84	
Model Prediction of VS Destruction (combined)	39.65%		39.65%		37.45%		41.46%		41.69%	
Digester Alkalinity Limited?	yes		yes		yes		yes		yes	
SOUR in Digester (mg Q2/hour/gram TS)	0.65	want < 1.5 at 20 C, goal = 1.13	0.65	want < 1.5 at 20 C, goal = 1.13	0.57	want < 1.5 at 20 C, goal = 1.13	0.50	want < 1.5 at 20 C, goal = 1.13	0.54	want < 1.5 at 20 C, goal = 1.13
Dewatered Solids From Plant (kg/day)	19,838		19,842		19,891		13,740		14,462	
PBNR AOR (kg/day)	54,845		54,846		56,835		39,579		41,083	
PBNR SOR (kg/day)	162,717		162,720		194,698		110,084		111,517	
PBNR Total Required Air Rate in Zones 3-5 (N*m3/hr)	66,945		66,946		81,117		48,025		47,541	

This document is the property of CH2M HILL, Inc.
The expression of the information contained in this
document is protected under U.S. copyright law.

Mass Balance for Average Flow Conditions

Constituent	Raw Wastewater (RW)	Main Recycle Influent (RecyI)	Main Recycled Stream (Recycle)	Main Combined Recycle Effluent (RecyE)	Main Bioreactor Influent (BI)	Main Secondary Clarifier Influent (SI)	Main Secondary Clarifier Effluent (SE)	Plant Effluent (PLE)	Main WAS	GBT WAS Thickener Influent (TWASI)	GBT Thickened WAS (TWAS)	AerDig1 Aerobic Digester Influent (ADI)	AerDig1 Aerobic Digester Effluent (ADE)	BFP Dewatering Influent (DWI)	BFP Dewatered Sludge (DWE)	Biosolids to Dispoal	GBT WAS Thickening Recycle (TWASR)	BFP Dewatering Recycle (DWR)	Recy Combined Discharge	Ender
Flow (m3/day)	44,812	44,812	3,742	48,555	48,555	70,975	44,713	44,713	3,841	3,841	1,047	1,047	1,047	1,047	99	99	2,794	948	3,742	
Carbonaceous BOD_5 (kg/day)	35,828	35,828	1,679	37,507	37,507	70,455	211	211	10,274	10,274	8,732	8,732	2,729	2,729	2,592	2,592	1,542	136	1,679	
COD (kg/day)	70,279	70,279	5,515	75,793	75,793	211,659	2,698	2,698	30,563	30,563	25,872	25,872	15,632	15,632	14,808	14,808	4,691	824	5,515	
TSS (kg/day)	40,306	40,306	6,586	46,893	46,893	253,279	671	671	36,947	36,947	31,405	31,405	20,882	20,882	19,838	19,838	5,542	1,044	6,586	
VSS (kg/day)	30,230	30,230	3,758	33,987	33,987	146,656	388	388	21,393	21,393	18,184	18,184	10,974	10,974	10,425	10,425	3,209	549	3,758	
TKN (kg-N/day)	6,718	6,718	429	7,146	7,146	11,248	164	164	1,621	1,621	1,371	1,371	1,048	1,048	869	869	250	179	429	
NH_3-N (kg-N/day)	4,031	4,031	132	4,162	4,162	10	7	7	1	1	0	0	145	145	14	14	0	131	132	
NO_3-N (kg-N/day)	0	0	366	366	366	885	558	558	48	48	13	13	365	365	35	35	35	331	366	
TP (kg-P/day)	1,119	1,119	1,208	2,328	2,328	14,492	246	246	2,084	2,084	1,761	1,761	1,761	1,761	876	876	323	885	1,208	
Alkalinity (kg/day as $CaCO_3$)	44,782	44,782	1,994	46,777	46,777	50,655	31,912	31,912	2,741	2,741	747	747	0	0	0	0	1,994	0	1,994	
H_2S (kg/day)	1,075	1,075	0	1,075	1,075	0	0	0	0	0	0	0	0	0	0	0	0	0	0	
BOD_5 (mg/L)	800	800	449	772	772	993	5	5	2,675	2,675	8,341	8,341	2,607	2,607	26,135	26,135	552	144	449	
COD (mg/L)	1,568	1,568	1,474	1,561	1,561	2,982	60	60	7,957	7,957	24,715	24,715	14,933	14,933	149,290	149,290	1,679	869	1,474	
TSS (mg/L)	899	899	1,760	966	966	3,569	15	15	9,619	9,619	30,000	30,000	19,948	19,948	200,000	200,000	1,983	1,102	1,760	
VSS (mg/L)	675	675	1,004	700	700	2,066	9	9	5,570	5,570	17,371	17,371	10,483	10,483	105,101	105,101	1,148	579	1,004	
TKN (mg-N/L)	150	150	115	147	147	158	4	4	422	422	1,310	1,310	1,001	1,001	8,760	8,760	89	189	115	
NH_3-N (mg-N/L)	90	90	35	86	86	0	0	0	0	0	0	0	138	138	138	138	0	138	35	
NO_3-N (mg-N/L)	0	0	98	8	8	12	12	12	12	12	12	12	349	349	349	349	12	349	98	
TP (mg-P/L)	25	25	323	48	48	204	6	6	542	542	1,682	1,682	1,682	1,682	8,828	8,828	116	934	323	
Alkalinity (mg/L as CaCO3)	999	999	533	963	963	714	714	714	714	714	714	714	0	0	0	0	714	0	533	
H_2S (mg/L)	24	24	0	22	22	0	0	0	0	0	0	0	0	0	0	0	0	0	0	

Mass Balance for Diurnal Peak Flow Conditions

Constituent	Raw Wastewater (RW)	Main Recycle Influent (RecyI)	Main Recycled Stream (Recycle)	Main Combined Recycle Effluent (RecyE)	Main Bioreactor Influent (BI)	Main Secondary Clarifier Influent (SI)	Main Secondary Clarifier Effluent (SE)		Main WAS	GBT WAS Thickener Influent (TWASI)	GBT Thickened WAS (TWAS)	AerDig1 Aerobic Digester Influent (ADI)	AerDig1 Aerobic Digester Effluent (ADE)	BFP Dewatering Influent (DWI)	BFP Dewatered Sludge (DWE)		GBT WAS Thickening Recycle (TWASR)	BFP Dewatering Recycle (DWR)	Recy Combined Discharge	
Flow (m3/day)	64,081	64,081	5,776	69,857	69,857	114,669	63,935	63,935	5,922	5,922	1,540	1,540	1,540	1,540	146	146	4,382	1,394	5,776	
Carbonaceous BOD_5 (kg/day)	46,576	46,576	2,474	49,050	49,050	84,820	246	246	9,872	9,872	12,877	12,877	4,015	4,015	3,814	3,814	2,274	201	2,474	
COD (kg/day)	91,362	91,362	8,079	99,441	99,441	387,381	3,816	3,816	44,772	44,772	37,905	37,905	23,001	23,001	21,789	21,789	6,867	1,212	8,079	
TSS (kg/day)	52,397	52,397	9,691	62,088	62,088	467,017	1,279	1,279	54,364	54,364	46,209	46,209	30,726	30,726	29,190	29,190	8,155	1,536	9,691	
VSS (kg/day)	39,298	39,298	5,510	44,807	44,807	269,302	737	737	31,349	31,349	26,646	26,646	16,147	16,147	15,339	15,339	4,702	807	5,510	
TKN (kg/day)	8,733	8,733	717	9,450	9,450	20,111	288	288	2,314	2,314	1,954	1,954	1,542	1,542	1,278	1,278	360	263	717	
NH_3-N (kg-N/day)	5,240	5,240	198	5,438	5,438	124	69	69	6	6	2	2	213	213	20	20	5	193	198	
NO_3-N (kg-N/day)	0	0	536	536	536	1,280	714	714	66	66	17	17	538	538	51	51	49	487	536	
TP (kg-P/day)	1,455	1,455	1,841	3,296	3,296	30,189	380	380	3,480	3,480	2,941	2,941	2,591	2,591	1,288	1,288	538	1,302	1,841	
Alkalinity (kg/day as $CaCO_3$)	58,217	58,217	2,187	60,404	60,404	57,241	31,916	31,916	2,956	2,956	769	769	0	0	0	0	2,187	0	2,187	
H_2S (kg/day)	1,397	1,397	0	1,397	1,397	0	0	0	0	0	0	0	0	0	0	0	0	0	0	
BOD_5 (mg/L)	727	727	428	702	702	740	4	4	1,667	1,667	8,360	8,360	2,607	2,607	26,135	26,135	519	144	428	
COD (mg/L)	1,426	1,426	1,399	1,423	1,423	3,378	60	60	7,560	7,560	24,609	24,609	14,933	14,933	149,290	149,290	1,567	869	1,399	
TSS (mg/L)	818	818	1,678	889	889	4,073	20	20	9,180	9,180	30,000	30,000	19,948	19,948	200,000	200,000	1,861	1,102	1,678	
VSS (mg/L)	613	613	954	641	641	2,349	12	12	5,294	5,294	17,299	17,299	10,483	10,483	105,101	105,101	1,073	579	954	
TKN (mg-N/L)	136	136	124	135	135	175	4	4	391	391	1,269	1,269	1,001	1,001	8,760	8,760	82	189	124	
NH_3-N (mg-N/L)	82	82	34	78	78	1	1	1	1	1	1	1	138	138	138	138	1	138	34	
NO_3-N (mg-N/L)	0	0	93	8	8	11	11	11	11	11	11	11	349	349	349	349	11	349	93	
TP (mg-P/L)	0	23	319	47	47	263	6	6	588	588	1,910	1,910	1,682	1,682	8,828	8,828	123	934	319	
Alkalinity (mg/L as CaCO3)	908	908	379	865	865	499	499	499	499	499	499	499	0	0	0	0	499	0	379	
H_2S (mg/L)	22	22	0	20	20	0	0	0	0	0	0	0	0	0	0	0	0	0	0	

This document is the property of CH2M HILL, Inc.
The expression of the information contained in this
document is protected under U.S. copyright law.

Stoichiometric Parameter:		Value	Default	Units
Hydrolysis of Particulate Substrate: X_S				
Production of Soluble Inert COD: S_I	f_{SI}	0.00		g COD/g COD
Heterotrophic Organisms: X_H				
Yield	Y_H	0.6660		g COD/g COD
Fraction of Lysis Inerts	f_X	0.08		g COD/g COD
Phosphorus Accumulating Organisms: X_{PAO}				
Yield (biomass/PHA)	Y_{PAO}	0.6250		g COD/g COD
Phosphate release per PHA Stored	Y_{PO4}	0.40		g P/g COD
PHA requirement for PP storage	Y_{PHA}	0.20		g COD/g P
Fraction of Lysis Inerts	f_X	0.08		g COD/g COD
Autotrophic Organisms: X_{AUT}				
Yield per NO_3-N	Y_A	0.19		g COD/g N
Fraction of Lysis Inerts	f_{XI}	0.08		g COD/g COD
Methanol Degraders-Population 1: X_{M1}				
Yield per MeOH COD	Y_{M1}	0.59		g COD/g COD
Fraction of Lysis Inerts	f_{XI}	0.10		g COD/g COD
Methanol Degraders-Population 2: X_{M2}				
Yield per MeOH COD	Y_{M2}	0.36		g COD/g COD
Fraction of Lysis Inerts	f_{XI}	0.10		g COD/g COD

Conversion Factors for Conservation Equatio		Value	Default	Units
Nitrogen Content of:	Check Delta	0.00		
Soluble Inert COD: S_I	i_{NSI}	0.0600	0.01	g N/g COD
Fermentable Substrate: S_F	i_{NSF}	0.0392	0.03	g N/g COD
Inert Particulate COD: X_I	i_{NXI}	0.0400	0.02	g N/g COD
Slowly Biodegradable Substrate: X_S	i_{NXS}	0.0392	0.04	g N/g COD
Biomass: X_H, X_{PAO}, X_{AUT}, X_{m1}, X_{m2}	i_{NBM}	0.0606	0.07	g N/g COD
Decay Products:, X_{Xdaa}	i_{NXdaa}	0.0606	0.02	g N/g COD
Phosphorus Content of:	Check Delta	0.00		
Soluble Inert COD: S_I	i_{PSI}	0.0000	0.00	g P/g COD
Fermentable Substrate: S_F	i_{PSF}	0.0000	0.01	g P/g COD
Inert Particulate COD: X_I	i_{PX}	0.0073	0.01	g P/g COD
Slowly Biodegradable Substrate: X_S	i_{PXS}	0.0053	0.01	g P/g COD
Biomass: X_H, X_{PAO}, X_{AUT}	i_{PBM}	0.0200	0.02	g P/g COD
Decay Products:, X_{Xdaa}	i_{PXdaa}	0.0200	1.02	g P/g COD
TSS to COD Ratio for:				
Inert Particulate COD: X_I	i_{TSSXI}	0.7825	0.75	g TSS/g COD
Slowly Biodegradable Substrate: X_S	i_{TSSXS}	0.7825	0.75	g TSS/g COD
Biomass: X_H, X_{PAO}, X_{AUT}, X_{m1}, X_{m2}	i_{TSSBM}	0.7825	0.90	g TSS/g COD
Decay Products: X_{Xdaa}	$i_{TSSXdaa}$	0.7825	0.75	g TSS/g COD

Nitrogen Ratio Adjustmen			Ratio
Fermentable Substrate: S_F	i_{NSF}	0.0392	
Slowly Biodegradable Substrate: X_S	i_{NXS}	0.0392	1.00
Alternate Nitrogen Ratio			
Fermentable Substrate: S_F	i_{NSF}	0.0534	
Slowly Biodegradable Substrate: X_S	i_{NXS}	0.0356	1.50

Kinetic Parameters		Unit	Typical Values 20 °C	10 °C	Temperature 14.0 deg. C
Hydrolysis of Particulate Substrate: X_S					
k_h	(Hydrolysis Rate)	1/day	3.00	2.00	2.35
η_{NO3}	(Anoxic Reduction Factor)		0.60	0.60	0.60
η_{fe}	(Anaerobic Reduction Factor)		0.40	0.40	0.40
K_{O2}	(Oxygen Inhibition)	g O_2/m^3	0.20	0.20	0.20
K_{NO3}	(Nitrate Inhibition)	g N/m^3	0.50	0.50	0.50
K_X	(Particulate Inhibition)	g COD/g COD	0.10	0.10	0.10
Hydrolysis of Decay Products: X_{Xdaa}					
K_{hdaa}	(Hydrolysis Rate)	1/d	1.20		0.94
K_{O2Ydaa}	(Oxygen Inhibition	g O_2/m^3	0.10		0.10
$K_{NO3Ydaa}$	(Nitrate Inhibition	g N/m^3	0.10		0.10
K_{Xdaa}	(Particulate Inhibition)	g X_{daa}/g X_H	0.10		0.10
Heterotrophic Organisms: X_H					
μ_H	(Max Growth Rate)	1/day	6.00	3.00	2.60
q_{fe}	(Max Fermentation Rate)	g COD/(g COD*d)	3.00	1.50	1.98
η_{NO3}	(Anoxic Reduction Factor)		0.80	0.80	0.80
b_H	(Decay Rate)	1/day	0.40	0.20	0.50
K_{O2}	(Oxygen Inhibition)	g O_2/m^3	0.20	0.20	0.20
K_F	(Growth on S_F)	g COD/m^3	4.00	4.00	2.00
K_{fe}	(Fermentation of S_F)	g COD/m^3	4.00	4.00	4.00
K_A	(Growth on S_A)	g COD/m^3	4.00	4.00	2.00
K_{NO3}	(Anoxic Growth)	g N/m^3	0.50	0.50	0.50
K_{NH4}	(Nitrogen Inhibition)	g N/m^3	0.05	0.05	0.05
K_P	(Phosphorus Inhibition)	g P/m^3	0.01	0.01	0.01
K_{ALK}	(Alkalininty Inhibition)	mole HCO_3^-/m^3	0.10	0.10	0.10
Phosphorus Accumulating Organisms: X_{PAO}					
q_{PHA}	(X_{PHA} Storage Rate)	g X_{PHA}/(g X_{PAO}*d)	3.00	2.00	6.00
q_{PP}	(X_{PP} Storage Rate)	g X_{PP}/(g X_{PAO}*d)	1.50	1.00	1.18
μ_{PAO}	(Max Growth Rate)	1/day	1.00	0.67	0.79
η_{NO3}	(Anoxic Reduction Factor)		0.60	0.60	0.60
b_{PAO}	(X_{PAO} Decay Rate)	1/day	0.20	0.10	0.10
b_{PP}	(X_{PP} Decay Rate)	1/day	0.20	0.10	0.10
b_{PHA}	(X_{PHA} Decay Rate)	1/day	0.20	0.10	0.10
K_{O2}	(Oxygen Inhibition)	g O_2/m^3	0.20	0.20	0.20
K_{NO3}	(Anoxic Growth)	g N/m^3	0.50	0.50	0.50
K_A	(Growth on S_A)	g COD/m^3	4.00	4.00	2.00
K_{NH4}	(Nitrogen Inhibition)	g N/m^3	0.05	0.05	0.0050
K_{PS}	(Phosphorus Inhibition of PP)	g P/m^3	0.20	0.20	0.20
K_P	(Phosphorus Inhibition of Growth)	g P/m^3	0.01	0.01	0.0050
K_{ALK}	(Alkalininty Inhibition)	mole HCO_3^-/m^3	0.10	0.10	0.10
K_{PP}	(Polyphosphate Inhibition)	g X_{PP}/g X_{PAO}	0.01	0.01	0.02
K_{MAX}	(Max Ratio of X_{PP}/X_{PAO})	g X_{PP}/g X_{PAO}	0.34	0.34	0.34
K_{IPP}	(Inhibition of PP Storage)	g X_{PP}/g X_{PAO}	0.02	0.02	0.02
K_{PHA}	(Saturation for PHA)	g X_{PHA}/g X_{PAO}	0.01	0.01	0.01
Autotrophic Organisms: X_{AUT}					
μ_{AUT}	(Maximum Growth Rate)	1/day	1.00	0.35	0.42
b_{AUT}	(Decay Rate)	1/day	0.15	0.05	0.04
K_{O2}	(Oxygen Inhibition)	g O_2/m_3	0.50	0.50	0.50
K_{NH4}	(Nitrogen Inhibition: SUBSTRATE)	g N/m^3	1.00	1.00	0.49
K_{ALK}	(Alkalininty Inhibition)	mole HCO_3^-/m^3	0.50	0.50	0.01
K_P	(Phosphorus Inhibition of Growth)	g P/m^3	0.01	0.01	0.0050
Precipitation					
k_{PRE}	(Rate of Phosphorus Precipitation)	m^3/(g $Me(OH)_2$*d)	1.00	1.00	2.00
k_{RED}	(Rate of Phosphous Redissolution)	1/day	0.60	0.60	0.10
K_{ALK}	(Alkalininty Inhibition	mole HCO_3^-/m^3	0.50	0.50	0.50
Methanol Degrading Organisms - Population 1					
μ_{M1}	(Maximum Growth Rate	1/day	3.88		7.00
η_{NO3M1}	(Anoxic Reduction Factor		0.21		0.20
b_{M1}	(Decay Rate)	1/day	0.18		0.20
K_{O2M1}	(Oxygen Inhibition	g O_2/m^3	0.20		0.50
K_{M1}	(Growth on Methanol)	g COD/m^3	4.00		4.00
K_{NO3M1}	(Anoxic Growth	g N/m^3	0.50	0.50	0.80
K_{NH4M1}	(Nitrogen Inhibition	g N/m^3	0.05		0.05
K_{ALKM1}	(Alkalinity Inhibition	mole HCO_3^-/m^3	0.10		0.10
K_{PM1}	(Phosphorus Inhibition	g P/m^3	0.01		0.01
Methanol Degrading Organisms - Population 2					
μ_{M2}	(Maximum Growth Rate	1/day	1.72		7.00
η_{NO3M2}	(Anoxic Reduction Factor		0.76		0.80
b_{M2}	(Decay Rate)	1/day	0.25		0.25
K_{O2M2}	(Oxygen Inhibition	g O_2/m^3	0.20		0.50
K_{M2}	(Growth on Methanol)	g COD/m^3	4.00		1.00
K_{NO3M2}	(Anoxic Growth)	g N/m^3	0.50	0.50	0.50
K_{NH4M2}	(Nitrogen Inhibition)	g N/m^3	0.05		0.05
K_{ALKM2}	(Alkalinity Inhibition)	mole HCO_3^-/m^3	0.10		0.10
K_{PM2}	(Phosphorus Inhibition	g P/m^3	0.01		0.01

This document is the property of CH2M HILL, Inc.
The expression of the information contained in thi
document is protected under U.S. copyright law.

Aerobic Digester Module

Average Conditions

Constituent	Influent	Effluent
Flow (m3/day)	1,047	1,047
Carbonaceous BOD_5 (kg/day)	8,732	2,729
Particulate	895	1,673
Heterotrophs	6,189	749
PAOs	1,646	307
PHA	1	0
Filtrate	1	0
COD (kg/day)	25,872	15,632
Particulate Bio	655	0
Particulate Non-Bio	8,835	8,835
Decay Prod Aer/Anx	817	3,092
Decay Prod Anaerobic	0	0
Heterotrophs	10,288	1,384
Autotrophs	677	321
PAOs	4,547	1,950
PHA	1	1
Soluble Bio	1	0
VFA	0	0
Colloidal Bio	0	0
Soluble Non-Bio	49	49
Colloidal Non-Bio	0	0
TSS (kg/day)	31,405	20,882
Biodegradable	513	0
Non-Biodegradable	13,717	13,717
Decay Prod Aer/Anx	639	2,419
Decay Prod Anaerobic	0	0
Metal Hydroxide	0	0
Metal Phosphate	0	0
Heterotrophs	8,050	1,083
Autotrophs	530	251
PAOs	3,558	1,526
PHA	1	0
Poly-P	4,397	1,886
VSS (kg/day)	18,184	10,974
Biodegradable	461	0
Non-Biodegradable	6,222	6,222
Decay Prod Aer/Anx	575	2,177
Decay Prod Anaerobic	0	0
Metal Hydroxide	0	0
Heterotrophs	7,245	974
Autotrophs	477	226
PAOs	3,202	1,373
PHA	1	0
TKN (kg-N/day)	1,371	1,048
NH_3-N (kg-N/day)	0	145
Particulate Bio Org N	26	0
Non-Bio Part Org N	353	491
Decay Prod Aer/Anx	49	187
Decay Prod Anaerobic	0	0
Heterotrophs	623	84
Autotrophs	41	19
PAOs	275	118
Non-Bio Soluble Org. N	3	3
Non-Bio Colloidal Org. N	0	0
Soluble Bio Org N	0	0
Colloidal Bio Org N	0	0
NO_Y-N (kg-N/day)	13	365
TP (kg-P/day)	1,761	1,761
Bio Particulate	3	0
Non-Bio Particulate	65	110
Decay Prod Aer/Anx	16	62
Decay Prod Anaerobic	0	0
Metal Phosphate	0	0
Heterotrophs	206	28
Autotrophs	14	6
PAOs	91	39
Poly-P	1,361	584
Ortho-PO_4	5	932
Alkalinity (kg/day as $CaCO_3$)	747	0
H_2S (kg/day)	0	0
BOD_5 (mg/L)	8,341	2,607
COD (mg/L)	24,715	14,933
TSS (mg/L)	30,000	19,948
VSS (mg/L)	17,371	10,483
TKN (mg-N/L)	1,310	1,001
NH_3-N (mg-N/L)	0	138
NO_Y-N (mg-N/L)	12	349
TP (mg-P/L)	1,682	1,682
Alkalinity (mg/L as CaCO3)	714	0
H_2S (mg/L)	0	0

Constituent	Influent	Effluent
Flow (m3/day)	1,047	1,047
Carbonaceous BOD_5 (kg/day)	8,732	2,729
Particulate	895	1,673
Heterotrophs	6,189	749
PAOs	1,646	307
PHA	1	0
Filtrate	1	0
COD (kg/day)	25,872	15,632
Particulate Bio	655	0
Particulate Non-Bio	8,835	8,835
Decay Prod Aer/Anx	817	3,092
Decay Prod Anaerobic	0	0
Heterotrophs	10,288	1,384
Autotrophs	677	321
PAOs	4,547	1,950
PHA	1	1
Soluble Bio	1	0
VFA	0	0
Colloidal Bio	0	0
Soluble Non-Bio	49	49
Colloidal Non-Bio	0	0
TSS (kg/day)	31,405	20,882
Biodegradable	513	0
Non-Biodegradable	13,717	13,717
Decay Prod Aer/Anx	639	2,419
Decay Prod Anaerobic	0	0
Metal Hydroxide	0	0
Metal Phosphate	0	0
Heterotrophs	8,050	1,083
Autotrophs	530	251
PAOs	3,558	1,526
PHA	1	0
Poly-P	4,397	1,886
VSS (kg/day)	18,184	10,974
Biodegradable	461	0
Non-Biodegradable	6,222	6,222
Decay Prod Aer/Anx	575	2,177
Decay Prod Anaerobic	0	0
Metal Hydroxide	0	0
Heterotrophs	7,245	974
Autotrophs	477	226
PAOs	3,202	1,373
PHA	1	0
TKN (kg-N/day)	1,371	1,048
NH_3-N (kg-N/day)	0	145
Particulate Bio Org N	26	0
Non-Bio Part Org N	353	491
Decay Prod Aer/Anx	49	187
Decay Prod Anaerobic	0	0
Heterotrophs	623	84
Autotrophs	41	19
PAOs	275	118
Non-Bio Soluble Org. N	3	3
Non-Bio Colloidal Org. N	0	0
Soluble Bio Org N	0	0
Colloidal Bio Org N	0	0
NO_Y-N (kg-N/day)	13	365
TP (kg-P/day)	1,761	1,761
Bio Particulate	3	0
Non-Bio Particulate	65	110
Decay Prod Aer/Anx	16	62
Decay *Prod Anaerobic*	0	0
Metal Phosphate	0	0
Heterotrophs	206	28
Autotrophs	14	6
PAOs	91	39
Poly-P	1,361	584
Ortho-PO_4	5	932
Alkalinity (kg/day as $CaCO_3$)	747	0
H_2S (kg/day)	0	0

Facility Operating Parameters		
Bioreactor Volume, m3		32,418.53
Minimum Valid SRT, days		3.00
SRT, Days		30.97
Temperature, oC		14
Volatile Solids Loading (kg VSS/m3-day)		0.56
Volatile Solids Reduction, %		39.65%
TSS Reduction %		33.51%
SOUR mg-O2/(g-VSS x hour) at 20 oC		1.24
SOUR mg-O2/(g-TSS x hour) at 20 oC		0.65
SOUR *mg-O2/(g-VSS x hour) with nitrification at 20 oC*		1.73
SOUR mg-O2/(g-TSS x hour) with nitrification at 20 oC		0.91
Total AOR (kgO2/day)		12,020
% denitrification		20%
Nutrients		
Nitrogen Released Due to Digestion (transformed to NH3) (kg/day)		588.54
Nitrogen Nitrified (Kg/day)		443.71
Nitrogen Denitrified (Kg/day)		91.35
Alkalinity in Feed (Kg/day)		747
Alkalinity Released Due to Digestion (Kg/day)		2,119
Alkalinity Lost Through Nitrification (Kg/day)		3,195
Alkalinity Produced Through Denitrification (Kg/day)		329
Alkalinity Discharged (Kg/day)		0
Kinetic Limitation on Nitrification		
DO, mg/L		2
Maximum Specific Growth Rate (mu_{max}), Day^{-1} at Operational DO		0.3408
Ammonia in Digester Effluent Due to Kinetic Limitations		
	a	0.26
	b	-1,298.93
	c	21.32
Effluent Ammonia (mg-N/L) for Kinetic Limitation		0.02
Potential Nitrification Associated with Kinetics (Kg/day)		588.68

Aerobic Biological Kinetics	
Parameter	**Temperature**
Heterotrophs	
Maximum Specific Growth Rate (mu_{max}), Day^{-1}	2.60
Half Saturation for Organics (K_S), mg BOD_5/L	3.13
Half Saturation for Organics (K_S), mg Bio COD/L	5.00
True Yield (Y_H), mg COD/mg COD (aerobic)	0.67
Decay Rate (b_H), Day^{-1}	0.22
Inactive Fraction (f_D)	0.19
Volatile Fraction, % of TSS	0.90
COD/VSS Ratio, mg COD/mg VSS	1.42
Nitrogen Content, N/VSS (%)	0.09
Phosphorus Content, P/VSS (%)	0.03
Autotrophs	
Maximum Specific Growth Rate (mu_{max}), Day^{-1}	0.43
Half Saturation for NH_3-N (K_N), mg-N/L	0.49
Half Saturation for O_2 (K_{O_2}), mg-O_2/L	0.50
True Yield (Y_A), mg TSS/mg NH_3-N	0.15
True Yield (Y_A), mg COD/mg NH_3-N	0.19
Decay Rate (b_A), Day^{-1}	0.04
Volatile Fraction, % of TSS	0.90
COD/VSS Ratio, mg COD/mg VSS	1.42
Nitrogen Content, N/VSS (%)	0.09
Phosphorus Content, P/VSS (%)	0.03
PAOs	
True Yield (Y_H), mg TSS/mg BOD_5	0.76
True Yield (Y_H), mg COD/mg COD	0.62
Decay Rate (b_H), Day^{-1}	0.04
Inactive Fraction (f_D)	0.19
Volatile Fraction, % of TSS	0.90
COD/VSS Ratio, mg COD/mg VSS	1.42
Nitrogen Content, N/VSS (%)	0.09
Phosphorus Content, P/VSS (%)	0.03
TSS Content of Poly-P	3.23

This document is the property of *CH2M HILL, Inc.*
The expression of the information contained in this
document is protected under U.S. copyright law.

Diurnal Peak Flow Conditions

Constituent	Influent	Effluent
Flow (m3/day)	1,540	1,540
Carbonaceous BOD_5 (kg/day)	12,877	4,015
Particulate	4,487	2,461
Heterotrophs	6,157	1,101
PAOs	2,232	452
PHA	1	0
Filtrate	0	0
COD (kg/day)	37,905	23,001
Particulate Bio	847	0
Particulate Non-Bio	13,271	13,000
Decay Prod Aer/Anx	6,591	4,549
Decay Prod Anaerobic	0	0
Heterotrophs	10,234	2,036
Autotrophs	727	472
PAOs	6,165	2,870
PHA	4	1
Soluble Bio	1	0
VFA	0	0
Colloidal Bio	0	0
Soluble Non-Bio	66	72
Colloidal Non-Bio	0	0
TSS (kg/day)	46,209	30,728
Biodegradable	663	0
Non-Biodegradable	19,368	20,183
Decay Prod Aer/Anx	5,157	3,559
Decay Prod Anaerobic	0	0
Metal Hydroxide	0	0
Metal Phosphate	0	0
Heterotrophs	8,008	1,593
Autotrophs	569	370
PAOs	4,624	2,245
PHA	2	1
Poly-P	7,618	2,775
VSS (kg/day)	28,646	16,147
Biodegradable	597	0
Non-Biodegradable	9,345	9,155
Decay Prod Aer/Anx	4,641	3,203
Decay Prod Anaerobic	0	0
Metal Hydroxide	0	0
Heterotrophs	7,207	1,434
Autotrophs	512	333
PAOs	4,342	2,021
PHA	2	1
TKN (kg-N/day)	1,954	1,542
NH_3-N (kg-N/day)	2	213
Particulate Bio Org N	51	0
Non-Bio Part Org N	531	723
Decay Prod Aer/Anx	329	275
Decay Prod Anaerobic	531	0
Heterotrophs	620	123
Autotrophs	44	29
PAOs	373	174
Non-Bio Soluble Org. N	4	4
Non-Bio Colloidal Org. N	0	0
Soluble Bio Org N	0	0
Colloidal Bio Org N	0	0
NO_3-N (kg-N/day)	17	538
TP (kg-P/day)	2,941	2,591
Bio Particulate	17	0
Non-Bio Particulate	84	162
Decay Prod Aer/Anx	132	91
Decay Prod Anaerobic	0	0
Metal Phosphate	0	0
Heterotrophs	205	41
Autotrophs	15	9
PAOs	123	57
Poly-P	2,358	859
Ortho-PO_4	7	1,371
Alkalinity (kg/day as $CaCO_3$)	769	0
H_2S (kg/day)	0	0
BOD_5 (mg/L)	8,360	2,607
COD (mg/L)	24,609	14,933
TSS (mg/L)	30,000	19,948
VSS (mg/L)	17,299	10,483
TKN (mg-N/L)	1,269	1,001
NH_3-N (mg-N/L)	1	138
NO_3-N (mg-N/L)	11	349
TP (mg-P/L)	1,910	1,682
Alkalinity (mg/L as CaCO3)	499	0
H_2S (mg/L)	0	0

This document is the property of CH2M HILL, Inc.
The expression of the information contained in thi
document is protected under U.S. copyright law.

Appendix D

Technical Memorandum

Selected Alternative for the Year 2035

Conceptual Design for Selected Alternative WWTP with 2035 Projected Flows and Loads

PREPARED FOR: Water Authority of Jordan

PREPARED BY: CH2M HILL

COPIES: File

DATE: December 16, 2008

During November 2008, the Water Authority of Jordan requested that CH2M HILL evaluate preliminary design and cost considerations for the construction of a wastewater treatment plant (WWTP) to treat projected flow for the selected alternative for 2035. CH2M HILL developed a computer-based biological process model for equipment sizing and developed associated cost estimates. This technical memorandum (TM) presents the results of the examination described above. For the purposes of this TM, the referenced facility is described as the "2035 Selected Alternative WWTP."

Design Conditions

Projected 2035 flow and loading values were used during computer-based biological process modeling of the 2035 Selected Alternative WWTP, and are presented in Table 1. Both projected 2035 average day and maximum month flow and loading conditions are shown. To determine projected 2035 flow and loading conditions, projected study area population values for 2028 were extrapolated to 2035 assuming a population growth rate of 1.5% per year. For consistency with previous wastewater flow projections, it was estimated that 90% of the population in the area served would be connected to the proposed wastewater treatment system. Then, projected 2035 average daily flow values were calculated based on a wastewater contribution rate of 115 L/c/day as in previous wastewater flow projections. Average daily loading conditions were based on 2007 influent contaminant concentration data from the Salt WWTP. Maximum month flow and loading values were estimated by multiplying average daily flow and loading values by a peaking factor of 1.4.

TABLE 1
2035 Selected Alternative Projected Influent Flow and Loading

	Average Day Design		Maximum Month Design	
Parameter	(m^3/day, kg/day)	(gpd, lbs/day)	(m^3/day, kg/day)	(gpd, lbs/day)
Flow	7,308	1,930,924	10,231	2,703,294
COD	9,651	21,257	13,511	29,760
BOD	5,849	12,883	8,189	18,036

COPYRIGHT 2009 BY CH2M HILL, INC. • COMPANY CONFIDENTIAL

TABLE 3
Proposed Equipment Types

Unit Process	Description
Influent Pumps	Submersible
Screening	Package Spiral Screen
Grit Removal	Package Vortex Grit Removal
Process Reactors	MLE, Concrete
Nitrified Recycle Pumps	Axial-Flow
Anoxic Basin Mixing	Submersible Mixers
Blowers (Process Reactors)	Multi-stage centrifugal with fine-bubble membrane diffusers
Clarifiers	Center-feed circular
RAS Pumping	Submersible
WAS Pumping	Submersible
WAS Thickening	Rotary Drum Thickeners
Thickened Sludge Pumping	Progressing Cavity
Aerobic Digesters	Concrete
Blowers (Aerobic Digester)	Multi-stage centrifugal
Dewatering Feed Pumps	Progressing Cavity
Dewatering Method	Geotextile Tubes

Table 4 presents estimated equipment sizing for the 2035 Selected Alternative WWTP based on results from biological process modeling.

TABLE 4
2035 Selected Alternative WWTP – Estimated WWTP Sizing

Unit Process	SI Units	Standard Units
Influent Pumps	3 @ 6,900 L/min each (duty), 1 @ 6,900 L/min (standby)	3 @ 1,800 gpm each (duty), 1 @ 1,800 gpm (standby)
Screening	1 @ 29,150 m3/day	1 @ 7.7 mgd
Grit Removal	1 @ 29,150 m3/day	1 @ 7.7 mgd
Process Reactors	3 trains @ 7,950 m3 each (23,850 m3 total)	3 trains @ 2.10 MG each (6.30 MG total)
Nitrified Recycle Pumps	4 @ 12,000 L/min each	4 @ 3,130 gpm each
Submersible Mixers	2 / train (6 total)	
Blowers (Process Reactors)	4 @ 4,690 N*m3/hr each (duty), 1 @ 4,690 N*m3/hr (standby)	4 @ 2,760 scfm each (duty), 1 @ 2,760 scfm (standby)
Clarifiers	2 @ 297.3 m2 each	2 @ 3,200 ft2 each

COPYRIGHT 2009 BY CH2M HILL, INC. • COMPANY CONFIDENTIAL

FIGURE 1
Process Schematic for 2035 Selected Alternative WWTP

TABLE 5
Mass Balance for 2035 Selected Alternative WWTP

		BOD_5		TSS	
Flow Stream Identification	**Flow (m3/day)**	**kg/day**	**mg/L**	**kg/day**	**mg/L**
Main Process Streams					
A - Influent Wastewater	10,232	8,182	800	9,205	900
B - Biological Process Reactor Influent	11,184	8,565	766	10,707	957
C - Biological Process Reactor Effluent	17,390	17,333	997	62,250	3,580
D - Secondary Clarifier Effluent	10,209	48	5	153	15
Solids Process Streams					
E - Return Activated Sludge	6,208			53,687	8,648
F - Waste Activated Sludge	975			8,429	8,648
G - Thickened WAS	239			7,164	30,000
H - Digested Sludge	184			5,524	30,000
I - Dewatered Sludge	26			5,247	200,000
J - WAS Thickener Centrate	736			1,264	1,718
K - Dewatering Centrate	251			276	1,102

Cost Estimates

Based on the computer-based wastewater process design models developed for estimated sizing of the 2035 Selected Alternative WWTP, preliminary construction cost and operation and maintenance cost estimates were developed. Estimated costs are presented in this section of the TM, with subsections for estimated construction cost and estimated annual operation and maintenance costs and net present value.

Construction Cost Estimate

Several assumptions were made during the development of the construction cost estimate, including the following:

- Markups were included:
  - Contractor Overhead and Profit (17%)
  - Contractor Mobilization / Demobilization (3%)
  - Contractor Bonds and Insurance (2.7%)

COPYRIGHT 2009 BY CH2M HILL, INC. • COMPANY CONFIDENTIAL

Appendix E

Technical Memorandum

Baqa'a Alternative for the Year 2035

Attachment A

Model Results Summary for Selected Alternative and Baqa'a Camp WWTP - 2035

Projected 2035 Average Daily Flow = 18,212 m^3/day

Projected 2035 Maximum Month Flow = 25,495 m^3/day

Estimated Equipment Sizing:

- 8 process reactors at 7,456 m^3 each
- 2 circular clarifiers at 30 m diameter each
- 18,293 m^3 total aerobic digester volume

Use Instructions: See Comment in this cell.

Linked Model Input	Current Run:	Comments	Scenarios: Max Month (winter)	Comments	Max Month (summer)	Comments	Average Day	Comments	For Class 1 Reliability	Comments
Flow (m3/day)	25,495	MM	25,495	MM	25,495	MM	18,212	AD Flow	19,121	75% of MM
Diurnal Flow Peaking Factor	1.43	MxD:MM	1.43	MxD:MM	1.43	MxD:MM	2	MxD:AD	1.43	Same as MxD:MM
CBOD5 (kg/day)	20,383	MM loading	20,383	MM loading	20,383	MM loading	14,559	AD Loading	15,287	75% of MM
TSS (kg/day)	22,930	MM loading	22,930	MM loading	22,930	MM loading	16,379	AD Loading	17,198	75% of MM
% VS	75%		75%		75%		75%		75%	
TKN (kg/day)	3,822	MM loading	3,822	MM loading	3,822	MM loading	2,730	AD Loading	2,866	75% of MM
Ammonia -N (kg/day)	2,293	MM loading	2,293	MM loading	2,293	MM loading	1,638	AD Loading	1,720	75% of MM
Total Phosphate - P (kg/day)	637	MM loading	637	MM loading	637	MM loading	455	AD Loading	478	75% of MM
Alkalinity (kg/day)	25,478	Assumed at 1000 mg/L	25,478	Assumed at 1000 mg/L	25,478	Assumed at 1000 mg/L	18,200	Assumed at 1000 mg/L	19,109	Assumed at 1000 mg/L
Hydrogen Sulfide (kg/day)	611	Assumed at 24 mg/L	611	Assumed at 24 mg/L	611	Assumed at 24 mg/L	437	Assumed at 24 mg/L	459	Assumed at 24 mg/L
Number of Aeration Basin Trains Online	8		8		8		8		8	
Volume per Train (m3)	7,456		7,456		7,456		7,456		7,456	
Total Aeration Basin Volume in Service (m3)	59,652		59,652		59,652		59,652		59,652	
SRT	10		10		10		10		10	
System pH	7.2		7.2		7.2		7.2		7.2	
Temperature °C	14	Minimum Month	14	Minimum Month	24.6	Maximum Month	16.8	Annual Average	14	Minimum Month
Nitrified Recycle Rate (% of Aer Basin influent flow)	625%		625%		625%		625%		625%	
Number of Secondary Clarifiers Online	2		2		2		2		1	
Surface Area per Secondary Clarifier (sq m)	725		725		725		725		725	
Total Secondary Clarifier Area (sq m)	1449		1449		1449		1449		725	
Secondary Clarifier Diameter (m)	30		30		30		30		30	
SVI (mL/g)	150		150		150		150		150	
Average Secondary Effluent TSS (mg/L)	15	Fixed	15	Fixed	15	Fixed	15	Fixed	15	Fixed
Peak Secondary Effluent TSS (mg/L)	20	Fixed	20	Fixed	20	Fixed	20	Fixed	20	Fixed
Average RAS Underflow Rate (% of Inf Q)	46.1%	Calculated	46.1%	Calculated	46.1%	Calculated	44.5%	Calculated	44.8%	Calculated
Peak RAS Underflow Rate (% of Inf Q)	64.1%	Calculated	64.1%	Calculated	63.8%	Calculated	46.6%	Calculated	62.5%	Calculated
Thickener Solids Capture (%)	85%		85%		85%		85%		85%	
Thickened Sludge Concentration (mg/L)	30,000		30,000		30,000		30,000		30,000	
AerDig1 Volume (m3)	18,293		18,293		18,293		18,293		18,293	
AerDig1 Temperature (°C)	14	Minimum Month	14	Minimum Month	24.6	Maximum Month	16.8	Annual Average	14	Minimum Month
AerDig1 DO (mg/L)	2		2		2		2		2	
AerDig1 % Denitrification	20%		20%		20%		20%		20%	
Dewatering Solids Capture (%)	95%		95%		95%		95%		95%	
Dewatered Sludge Concentration (%)	20%		20%		20%		20%		20%	
Results										
SRT	10.0		10.0		10.0		10.0		10.0	
Final Anoxic Zone NO3	0.13	want < 0.5	0.13	want < 0.5	0.05	want < 0.5	0.09	want < 0.5	0.11	want < 0.5
Secondary Effluent TSS (mg/L)	15.0	want < 60 (goal = 42)	15.0	want < 60 (goal = 42)	15.0	want < 60 (goal = 42)	15.0	want < 60 (goal = 42)	15.0	want < 60 (goal = 42)
Secondary Effluent CBOD5 (mg/L)	4.73	want < 60 (goal = 42)	4.73	want < 60 (goal = 42)	4.15	want < 60 (goal = 42)	4.48	want < 60 (goal = 42)	4.64	want < 60 (goal = 42)
Secondary Effluent COD (mg/L)	60.3	want < 150, (goal = 105.0)	60.3	want < 150, (goal = 105.0)	59.8	want < 150, (goal = 105.0)	60.0	want < 150, (goal = 105.0)	60.2	want < 150, (goal = 105.0)
Secondary Effluent TN (mg/L)	16.1	want < 70, (goal = 49.0)	16.1	want < 70, (goal = 49.0)	16.1	want < 70, (goal = 49.0)	15.7	want < 70, (goal = 49.0)	15.8	want < 70, (goal = 49.0)
Secondary Effluent NH3-N (mg/L)	0.15		0.15		0.08		0.09		0.15	
Secondary Effluent NO3-N (mg/L)	12.471	want < 18 (goal is 12.6)	12.471	want < 18 (goal is 12.6)	12.497	want < 18 (goal is 12.6)	12.122	want < 18 (goal is 12.6)	12.172	want < 18 (goal is 12.6)
Secondary Effluent TP (mg/L)	5.44	want < 15 (goal = 10.5)	5.45	want < 15 (goal = 10.5)	1.90	want < 15 (goal = 10.5)	5.63	want < 15 (goal = 10.5)	6.68	want < 15 (goal = 10.5)
Influent COD (mg/L)	1,568	~1320 mg/L per ops data	1,568	~1320 mg/L per ops data	1,568	~1320 mg/L per ops data	1,568	~1320 mg/L per ops data	1,568	~1320 mg/L per ops data
Corresponding Average MLSS (mg/L)	3,587	want < 3600 at MM	3,588	want < 3600 at MM	3,557	want < 3600 at MM	2,596	want < 3600 at MM	2,715	want < 3600 at MM
Secondary Influent MLSS (mg/L)	3,568		3,569		3,536		2,579		2,697	
Nitrified Recycle Rate (m3/day)	172,630		172,630		172,631		127,807		133,393	
Solids Loading Rate To Secondary Clarifiers (kg/day-sq m)	99.42		99.41		98.52		52.57		115.04	
RAS Rate (m3/day)	12,755		12,746		12,746		9,092		9,561	
Corresponding WAS (kg/day)	21,020		21,022		20,841		15,214		15,910	
Combined Thickened Feed Sludge to Aerobic Dig. (kg/day)	17,867		17,869		17,715		12,932		13,523	
Digester Volatile Solids Loading Rate (kg/day-m3)	0.57		0.57		0.53		0.40		0.43	
Digester SRT	30.72		30.71		30.98		42.44		40.58	
Model Prediction of VS Destruction (combined)	39.59%		39.59%		37.39%		41.40%		41.63%	
Digester Alkalinity Limited?	yes		yes		yes		yes		yes	
SOUR in Digester (mg O2/hour/gram TS)	0.65	want < 1.5 at 20 C, goal = 1.13	0.65	want < 1.5 at 20 C, goal = 1.13	0.57	want < 1.5 at 20 C, goal = 1.13	0.50	want < 1.5 at 20 C, goal = 1.13	0.54	want < 1.5 at 20 C, goal = 1.13
Dewatered Solids From Plant (kg/day)	11,297.74		11,299.65		11,324.18		7,812.11		8,226.73	
PBNR AOR (kg/day)	31,203		31,203		32,334		22,501		23,358	
PBNR SOR (kg/day)	92,574		92,575		110,757		62,439		63,325	
PBNR Total Required Air Rate in Zones 3-5 (N*m3/hr)	38,087		38,087		46,144		27,214		26,973	

This document is the property of CH2M HILL, Inc.
The expression of the information contained in this
document is protected under U.S. copyright law.

Mass Balance for Average Flow Conditions

Constituent	Raw Wastewater (RW)	Main Recycle Influent (RecyI)	Main Recycled Stream (Recycle)	Main Combined Recycle Effluent (RecyE)	Main Bioreactor Influent (BI)	Main Secondary Clarifier Influent (SI)	Main Secondary Clarifier Effluent (SE)	Plant Effluent (PLE)	Main WAS	GBT WAS Thickener Influent (TWASI)	GBT Thickened WAS (TWAS)	AerDig1 Aerobic Digester Influent (ADI)	AerDig1 Aerobic Digester Effluent (ADE)	BFP Dewatering Influent (DWI)	BFP Dewatered Sludge (DWE)	Biosolids to Dispoal	GBT WAS Thickening Recycle (TWASR)	BFP Dewatering Recycle (DWR)	Recy Combined Discharge	Ender
Flow (m3/day)	25,495	25,495	2,129	27,624	27,624	40,381	25,438	25,438	2,186	2,186	596	596	596	596	56	56	1,590	539	2,129	
Carbonaceous BOD_5 (kg/day)	20,383	20,383	955	21,338	21,338	40,082	120	120	5,845	5,845	4,968	4,968	1,555	1,555	1,477	1,477	877	78	955	
COD (kg/day)	39,983	39,983	3,138	43,120	43,120	120,413	1,535	1,535	17,387	17,387	14,719	14,719	8,902	8,902	8,433	8,433	2,669	469	3,138	
TSS (kg/day)	22,931	22,931	3,748	26,679	26,679	144,092	382	382	21,019	21,019	17,866	17,866	11,892	11,892	11,297	11,297	3,153	595	3,748	
VSS (kg/day)	17,198	17,198	2,138	19,336	19,336	83,432	221	221	12,171	12,171	10,345	10,345	6,249	6,249	5,937	5,937	1,826	312	2,138	
TKN (kg-N/day)	3,822	3,822	244	4,066	4,066	6,399	93	93	922	922	780	780	596	596	495	495	142	102	244	
NH_3-N (kg-N/day)	2,293	2,293	75	2,368	2,368	6	4	4	0	0	0	0	82	82	8	8	0	74	75	
NO_3-N (kg-N/day)	0	0	208	208	208	504	317	317	27	27	7	7	208	208	20	20	20	188	208	
TP (kg-P/day)	637	637	686	1,323	1,323	8,243	139	139	1,185	1,185	1,002	1,002	1,002	1,002	500	500	184	502	686	
Alkalinity (kg/day as $CaCO_3$)	25,478	25,478	1,135	26,613	26,613	28,821	18,156	18,156	1,560	1,560	425	425	0	0	0	0	1,135	0	1,135	
H_2S (kg/day)	611	611	0	611	611	0	0	0	0	0	0	0	0	0	0	0	0	0	0	
BOD_5 (mg/L)	799	799	449	772	772	993	5	5	2,674	2,674	8,341	8,341	2,611	2,611	26,153	26,153	552	144	449	
COD (mg/L)	1,568	1,568	1,474	1,561	1,561	2,982	60	60	7,956	7,956	24,715	24,715	14,948	14,948	149,292	149,292	1,678	870	1,474	
TSS (mg/L)	899	899	1,760	966	966	3,568	15	15	9,617	9,617	30,000	30,000	19,968	19,968	200,000	200,000	1,983	1,103	1,760	
VSS (mg/L)	675	675	1,004	700	700	2,066	9	9	5,569	5,569	17,371	17,371	10,493	10,493	105,102	105,102	1,148	580	1,004	
TKN (mg-N/L)	150	150	114	147	147	158	4	4	422	422	1,310	1,310	1,001	1,001	8,759	8,759	89	188	114	
NH_3-N (mg-N/L)	90	90	35	86	86	0	0	0	0	0	0	0	138	138	138	138	0	138	35	
NO_3-N (mg-N/L)	0	0	98	8	8	12	12	12	12	12	12	12	349	349	349	349	12	349	98	
TP (mg-P/L)	25	25	322	48	48	204	5	5	542	542	1,682	1,682	1,682	1,682	8,847	8,847	115	931	322	
Alkalinity (mg/L as CaCO3)	999	999	533	963	963	714	714	714	714	714	714	714	0	0	0	0	714	0	533	
H_2S (mg/L)	24	24	0	22	22	0	0	0	0	0	0	0	0	0	0	0	0	0	0	

Mass Balance for Diurnal Peak Flow Conditions

Constituent	Raw Wastewater (RW)	Main Recycle Influent (RecyI)	Main Recycled Stream (Recycle)	Main Combined Recycle Effluent (RecyE)	Main Bioreactor Influent (BI)	Main Secondary Clarifier Influent (SI)	Main Secondary Clarifier Effluent (SE)		Main WAS	GBT WAS Thickener Influent (TWASI)	GBT Thickened WAS (TWAS)	AerDig1 Aerobic Digester Influent (ADI)	AerDig1 Aerobic Digester Effluent (ADE)	BFP Dewatering Influent (DWI)	BFP Dewatered Sludge (DWE)		GBT WAS Thickening Recycle (TWASR)	BFP Dewatering Recycle (DWR)	Recy Combined Discharge	
Flow (m3/day)	36,458	36,458	3,286	39,744	39,744	65,239	36,374	36,374	3,369	3,369	876	876	876	876	83	83	2,493	793	3,286	
Carbonaceous BOD_5 (kg/day)	26,498	26,498	1,408	27,906	27,906	48,254	140	140	5,617	5,617	7,326	7,326	2,288	2,288	2,174	2,174	1,293	114	1,408	
COD (kg/day)	51,977	51,977	4,597	56,574	56,574	220,376	2,171	2,171	25,472	25,472	21,565	21,565	13,099	13,099	12,409	12,409	3,907	690	4,597	
TSS (kg/day)	29,809	29,809	5,514	35,324	35,324	265,683	727	727	30,929	30,929	26,290	26,290	17,499	17,499	16,624	16,624	4,639	875	5,514	
VSS (kg/day)	22,357	22,357	3,135	25,492	25,492	153,203	419	419	17,835	17,835	15,160	15,160	9,196	9,196	8,736	8,736	2,675	460	3,135	
TKN (kg/day)	4,969	4,969	408	5,376	5,376	11,442	164	164	1,317	1,317	1,112	1,112	877	877	728	728	205	149	408	
NH_3-N (kg-N/day)	2,981	2,981	112	3,093	3,093	71	39	39	4	4	1	1	121	121	11	11	3	110	112	
NO_3-N (kg-N/day)	0	0	304	304	304	728	406	406	38	38	10	10	306	306	29	29	28	277	304	
TP (kg-P/day)	828	828	1,045	1,873	1,873	17,172	214	214	1,980	1,980	1,673	1,673	1,474	1,474	735	735	306	739	1,045	
Alkalinity (kg/day as $CaCO_3$)	33,122	33,122	1,245	34,366	34,366	32,568	18,158	18,158	1,682	1,682	437	437	0	0	0	0	1,245	0	1,245	
H_2S (kg/day)	795	795	0	795	795	0	0	0	0	0	0	0	0	0	0	0	0	0	0	
BOD_5 (mg/L)	727	727	428	702	702	740	4	4	1,667	1,667	8,360	8,360	2,611	2,611	26,153	26,153	519	144	428	
COD (mg/L)	1,426	1,426	1,399	1,423	1,423	3,378	60	60	7,560	7,560	24,608	24,608	14,948	14,948	149,292	149,292	1,567	870	1,399	
TSS (mg/L)	818	818	1,678	889	889	4,072	20	20	9,179	9,179	30,000	30,000	19,968	19,968	200,000	200,000	1,861	1,103	1,678	
VSS (mg/L)	613	613	954	641	641	2,348	12	12	5,293	5,293	17,299	17,299	10,493	10,493	105,102	105,102	1,073	580	954	
TKN (mg-N/L)	136	136	124	135	135	175	4	4	391	391	1,269	1,269	1,001	1,001	8,759	8,759	82	188	124	
NH_3-N (mg-N/L)	82	82	34	78	78	1	1	1	1	1	1	1	138	138	138	138	1	138	34	
NO_3-N (mg-N/L)	0	0	93	8	8	11	11	11	11	11	11	11	349	349	349	349	11	349	93	
TP (mg-P/L)	0	23	318	47	47	263	6	6	588	588	1,910	1,910	1,682	1,682	8,847	8,847	123	931	318	
Alkalinity (mg/L as CaCO3)	908	908	379	865	865	499	499	499	499	499	499	499	0	0	0	0	499	0	379	
H_2S (mg/L)	22	22	0	20	20	0	0	0	0	0	0	0	0	0	0	0	0	0	0	

This document is the property of CH2M HILL, Inc.
The expression of the information contained in this document is protected under U.S. copyright law.

Stoichiometric Parameters		Value	Default	Units
Hydrolysis of Particulate Substrate: X_S				
Production of Soluble Inert COD: S_I	f_{SI}	0.00		g COD/g COD
Heterotrophic Organisms: X_H				
Yield	Y_H	0.6660		g COD/g COD
Fraction of Lysis Inerts	f_X	0.08		g COD/g COD
Phosphorus Accumulating Organisms: X_{PAO}				
Yield (biomass/PHA)	Y_{PAO}	0.6250		g COD/g COD
Phosphate release per PHA Stored	Y_{PO4}	0.40		g P/g COD
PHA requirement for PP storage	Y_{PHA}	0.20		g COD/g P
Fraction of Lysis Inerts	f_X	0.08		g COD/g COD
Autotrophic Organisms: X_{AUT}				
Yield per NO_3-N	Y_A	0.19		g COD/g N
Fraction of Lysis Inerts	f_{XI}	0.08		g COD/g COD
Methanol Degraders-Population 1: X_{M1}				
Yield per MeOH COD	Y_{M1}	0.58		g COD/g COD
Fraction of Lysis Inerts	f_{XI}	0.10		g COD/g COD
Methanol Degraders-Population 2: X_{M2}				
Yield per MeOH COD	Y_{M2}	0.36		g COD/g COD
Fraction of Lysis Inerts	f_{XI}	0.10		g COD/g COD

Conversion Factors for Conservation Equatio		Value	Default	Units
Nitrogen Content of: Check Delta		0.00		
Soluble Inert COD: S_I	i_{NSI}	0.0600	0.01	g N/g COD
Fermentable Substrate: S_F	i_{NSF}	0.0392	0.03	g N/g COD
Inert Particulate COD: X_I	i_{NXI}	0.0400	0.02	g N/g COD
Slowly Biodegradable Substrate: X_S	i_{NXS}	0.0392	0.04	g N/g COD
Biomass: X_I, X_{PAO}, X_{AUT}, X_{m1}, X_{m2}	i_{NBM}	0.0606	0.07	g N/g COD
Decay Products: X_{daa}	i_{NXdaa}	0.0606	0.02	g N/g COD
Phosphorus Content of: Check Delta		0.00		
Soluble Inert COD: S_I	i_{PSI}	0.0000	0.00	g P/g COD
Fermentable Substrate: S_F	i_{PSF}	0.0000	0.01	g P/g COD
Inert Particulate COD: X_I	i_{PX}	0.0073	0.01	g P/g COD
Slowly Biodegradable Substrate: X_S	i_{PXS}	0.0053	0.01	g P/g COD
Biomass: X_H, X_{PAO}, X_{AUT}	i_{PBM}	0.0200	0.02	g P/g COD
Decay Products: X_{daa}	i_{PXdaa}	0.0200	1.02	g P/g COD
TSS to COD Ratio for:				
Inert Particulate COD: X_I	i_{TSSX}	0.7825	0.75	g TSS/g COD
Slowly Biodegradable Substrate: X_S	i_{TSSXS}	0.7825	0.75	g TSS/g COD
Biomass: X_H, X_{PAO}, X_{AUT}, X_{m1}, X_{m2}	i_{TSSBM}	0.7825	0.90	g TSS/g COD
Decay Products: X_{daa}	$i_{TSSXdaa}$	0.7825	0.75	g TSS/g COD

Nitrogen Ratio Adjustmen			Ratio
Fermentable Substrate: S_F	i_{NSF}	0.0392	
Slowly Biodegradable Substrate: X_S	i_{NXS}	0.0392	1.00
Alternate Nitrogen Ratio			
Fermentable Substrate: S_F	i_{NSF}	0.0534	
Slowly Biodegradable Substrate: X_S	i_{NXS}	0.0356	1.50

Kinetic Parameters		Unit	Typical Values 20 °C	10 °C	Temperature 14.0 deg. C
Hydrolysis of Particulate Substrate: X_S					
k_h	(Hydrolysis Rate)	1/day	3.00	2.00	2.35
η_{NO3}	(Anoxic Reduction Factor)		0.60	0.60	0.60
η_{fe}	(Anaerobic Reduction Factor)		0.40	0.40	0.40
K_{O2}	(Oxygen Inhibition)	g O_2/m^3	0.20	0.20	0.20
K_{NO3}	(Nitrate Inhibition)	g N/m^3	0.50	0.50	0.50
K_X	(Particulate Inhibition)	g COD/g COD	0.10	0.10	0.10
Hydrolysis of Decay Products: X_{daa}					
K_{hdaa}	(Hydrolysis Rate)	1/d	1.20		0.94
K_{O2Ydaa}	(Oxygen Inhibition	g O_2/m^3	0.10		0.10
$K_{NO3Ydaa}$	(Nitrate Inhibition	g N/m^3	0.10		0.10
K_{Xdaa}	(Particulate Inhibition)	g X_{daa}/g X_H	0.10		0.10
Heterotrophic Organisms: X_H					
μ_H	(Max Growth Rate)	1/day	6.00	3.00	2.60
q_{fe}	(Max Fermentation Rate)	g COD/(g COD*d)	3.00	1.50	1.90
η_{NO3}	(Anoxic Reduction Factor)		0.80	0.80	0.80
b_H	(Decay Rate)	1/day	0.40	0.20	0.50
K_{O2}	(Oxygen Inhibition)	g O_2/m^3	0.20	0.20	0.20
K_F	(Growth on S_F)	g COD/m^3	4.00	4.00	2.00
K_{fe}	(Fermentation of S_F)	g COD/m^3	4.00	4.00	4.00
K_A	(Growth on S_A)	g COD/m^3	4.00	4.00	2.00
K_{NO3}	(Anoxic Growth)	g N/m^3	0.50	0.50	0.50
K_{NH4}	(Nitrogen Inhibition)	g N/m^3	0.05	0.05	0.05
K_P	(Phosphorus Inhibition)	g P/m^3	0.01	0.01	0.01
K_{ALK}	(Alkalininty Inhibition)	mole HCO_3^-/m^3	0.10	0.10	0.10
Phosphorus Accumulating Organisms: X_{PAO}					
q_{PHA}	(X_{PHA} Storage Rate)	g X_{PHA}/(g X_{PAO}*d)	3.00	2.00	6.00
q_{PP}	(X_{PP} Storage Rate)	g X_{PP}/(g X_{PAO}*d)	1.50	1.00	1.18
μ_{PAO}	(Max Growth Rate)	1/day	1.00	0.67	0.79
η_{NO3}	(Anoxic Reduction Factor)		0.60	0.60	0.60
b_{PAO}	(X_{PAO} Decay Rate)	1/day	0.20	0.10	0.10
b_{PP}	(X_{PP} Decay Rate)	1/day	0.20	0.10	0.10
b_{PHA}	(X_{PHA} Decay Rate)	1/day	0.20	0.10	0.10
K_{O2}	(Oxygen Inhibition)	g O_2/m^3	0.20	0.20	0.20
K_{NO3}	(Anoxic Growth)	g N/m^3	0.50	0.50	0.50
K_A	(Growth on S_A)	g COD/m^3	4.00	4.00	2.00
K_{NH4}	(Nitrogen Inhibition)	g N/m^3	0.05	0.05	0.0050
K_{PS}	(Phosphorus Inhibition of PP)	g P/m^3	0.20	0.20	0.20
K_P	(Phosphorus Inhibition of Growth)	g P/m^3	0.01	0.01	0.0050
K_{ALK}	(Alkalininty Inhibition)	mole HCO_3^-/m^3	0.10	0.10	0.10
K_{PP}	(Polyphosphate Inhibition)	g X_{PP}/g X_{PAO}	0.01	0.01	0.02
K_{MAX}	(Max Ratio of X_{PP}/X_{PAO})	g X_{PP}/g X_{PAO}	0.34	0.34	0.34
K_{IPP}	(Inhibition of PP Storage)	g X_{PP}/g X_{PAO}	0.02	0.02	0.02
K_{PHA}	(Saturation for PHA)	g X_{PHA}/g X_{PAO}	0.01	0.01	0.01
Autotrophic Organisms: X_{AUT}					
μ_{AUT}	(Maximum Growth Rate)	1/day	1.00	0.35	0.42
b_{AUT}	(Decay Rate)	1/day	0.15	0.05	0.04
K_{O2}	(Oxygen Inhibition)	g O_2/m^3	0.50	0.50	0.50
K_{NH4}	(Nitrogen Inhibition: SUBSTRATE)	g N/m^3	1.00	1.00	0.49
K_{ALK}	(Alkalininty Inhibition)	mole HCO_3^-/m^3	0.50	0.50	0.01
K_P	(Phosphorus Inhibition of Growth)	g P/m^3	0.01	0.01	0.0050
Precipitation					
k_{PRE}	(Rate of Phosphorus Precipitation)	m^3/(g $Me(OH)_3$*d)	1.00	1.00	2.00
k_{RED}	(Rate of Phosphous Redissolution)	1/day	0.60	0.60	0.10
K_{ALK}	(Alkalinity Inhibition	mole HCO_3^-/m^3	0.50	0.50	0.50
Methanol Degrading Organisms - Population 1					
μ_{M1}	(Maximum Growth Rate	1/day	3.88		7.00
η_{NO3M1}	(Anoxic Reduction Factor		0.21		0.20
b_{M1}	(Decay Rate)	1/day	0.18		0.20
K_{O2M1}	(Oxygen Inhibition	g O_2/m^3	0.20		0.50
K_{M1}	(Growth on Methanol)	g COD/m^3	4.00		4.00
K_{NO3M1}	(Anoxic Growth	g N/m^3	0.50	0.50	0.80
K_{NH4M1}	(Nitrogen Inhibition	g N/m^3	0.05		0.05
K_{ALKM1}	(Alkalinity Inhibition	mole HCO_3^-/m^3	0.10		0.10
K_{PM1}	(Phosphorus Inhibition	g P/m^3	0.01		0.01
Methanol Degrading Organisms - Population 2					
μ_{M2}	(Maximum Growth Rate	1/day	1.72		7.00
η_{NO3M2}	(Anoxic Reduction Factor		0.76		0.80
b_{M2}	(Decay Rate)	1/day	0.25		0.25
K_{O2M2}	(Oxygen Inhibition	g O_2/m^3	0.20		0.50
K_{M2}	(Growth on Methanol)	g COD/m^3	4.00		1.00
K_{NO3M2}	(Anoxic Growth)	g N/m^3	0.50	0.50	0.50
K_{NH4M2}	(Nitrogen Inhibition)	g N/m^3	0.05		0.05
K_{ALKM2}	(Alkalinity Inhibition)	mole HCO_3^-/m^3	0.10		0.10
K_{PM2}	(Phosphorus Inhibition	g P/m^3	0.01		0.01

This document is the property of CH2M HILL, Inc.
The expression of the information contained in thi
document is protected under U.S. copyright law.

ameters		
		18,292.91
		3.00
		30.72
		14
		0.57
		39.59%
		33.44%
		1.24
		0.65
at 20 oC		1.74
at 20 oC		0.92
		6,828
		20%
med to NH3) (kg/day)		334.31
		252.15
		51.92
		425
		1,204
		1,815
g/day)		187
		0
		2
at Operational DO		0.3408
imitations		
	a	0.26
	b	-1,298.57
	c	21.36
on		0.02
(Kg/day)		334.39

Aerobic Biological Kinetics	
Parameter	**Temperature**
Heterotrophs	
Maximum Specific Growth Rate (m_{max}), Day^{-1}	2.60
Half Saturation for Organics (K_s), mg BOD_5/L	3.13
Half Saturation for Organics (K_s), mg Bio COD/L	5.00
True Yield (Y_H), mg COD/mg COD (aerobic)	0.67
Decay Rate (b_H), Day^{-1}	0.22
Inactive Fraction (f_D)	0.19
Volatile Fraction, % of TSS	0.90
COD/VSS Ratio, mg COD/mg VSS	1.42
Nitrogen Content, N/VSS (%)	0.09
Phosphorus Content, P/VSS (%)	0.03
Autotrophs	
Maximum Specific Growth Rate (m_{max}), Day^{-1}	0.43
Half Saturation for NH_3-N (K_N), mg-N/L	0.49
Half Saturation for O_2 (K_O), mg-O_2/L	0.50
True Yield (Y_A), mg TSS/mg NH_3-N	0.15
True Yield (Y_A), mg COD/mg NH_3-N	0.19
Decay Rate (b_A), Day^{-1}	0.04
Volatile Fraction, % of TSS	0.90
COD/VSS Ratio, mg COD/mg VSS	1.42
Nitrogen Content, N/VSS (%)	0.09
Phosphorus Content, P/VSS (%)	0.03
PAOs	
True Yield (Y_H), mg TSS/mg BOD_5	0.76
True Yield (Y_H), mg COD/mg COD	0.62
Decay Rate (b_H), Day^{-1}	0.04
Inactive Fraction (f_D)	0.19
Volatile Fraction, % of TSS	0.90
COD/VSS Ratio, mg COD/mg VSS	1.42
Nitrogen Content, N/VSS (%)	0.09
Phosphorus Content, P/VSS (%)	0.03
TSS Content of Poly-P	3.23

This document is the property of CH2M HILL, Inc.
The expression of the information contained in thi
document is protected under U.S. copyright law.

Constituent	Influent	Effluent
Flow (m3/day)	876	876
Carbonaceous BOD_5 (kg/day)	7,326	2,288
Particulate	2,552	1,398
Heterotrophs	3,503	631
PAOs	1,270	259
PHA	1	0
Filtrate	0	0
COD (kg/day)	21,585	13,099
Particulate Bio	482	0
Particulate Non-Bio	7,550	7,396
Decay Prod Aer/Anx	3,749	2,585
Decay Prod Anaerobic	0	0
Heterotrophs	5,822	1,167
Autotrophs	413	270
PAOs	3,508	1,641
PHA	2	1
Soluble Bio	0	0
VFA	0	0
Colloidal Bio	0	0
Soluble Non-Bio	38	41
Colloidal Non-Bio	0	0
TSS (kg/day)	26,290	17,499
Biodegradable	377	0
Non-Biodegradable	11,019	11,482
Decay Prod Aer/Anx	2,934	2,022
Decay Prod Anaerobic	0	0
Metal Hydroxide	0	0
Metal Phosphate	0	0
Heterotrophs	4,556	913
Autotrophs	324	211
PAOs	2,745	1,284
PHA	1	0
Poly-P	4,334	1,586
VSS (kg/day)	15,160	9,196
Biodegradable	339	0
Non-Biodegradable	5,317	5,208
Decay Prod Aer/Anx	2,640	1,820
Decay Prod Anaerobic	0	0
Metal Hydroxide	0	0
Heterotrophs	4,100	821
Autotrophs	291	190
PAOs	2,471	1,155
PHA	1	0
TKN (kg-N/day)	1,112	877
NH_3-N (kg-N/day)	1	121
Particulate Bio Org N	29	0
Non-Bio Part Org N	302	411
Decay Prod Aer/Anx	187	157
Decay Prod Anaerobic	302	0
Heterotrophs	353	71
Autotrophs	25	16
PAOs	212	99
Non-Bio Soluble Org. N	2	2
Non-Bio Colloidal Org. N	0	0
Soluble Bio Org N	0	0
Colloidal Bio Org N	0	0
NO_3-N (kg-N/day)	10	306
TP (kg-P/day)	1,673	1,474
Bio Particulate	10	0
Non-Bio Particulate	48	92
Decay Prod Aer/Anx	75	52
Decay Prod Anaerobic	0	0
Metal Phosphate	0	0
Heterotrophs	116	23
Autotrophs	8	5
PAOs	70	33
Poly-P	1,342	491
Ortho-PO_4	4	778
Alkalinity (kg/day as $CaCO_3$)	437	0
H_2S (kg/day)	0	0
BOD_5 (mg/L)	8,360	2,611
COD (mg/L)	24,608	14,948
TSS (mg/L)	30,000	19,968
VSS (mg/L)	17,299	10,493
TKN (mg-N/L)	1,269	1,001
NH_3-N (mg-N/L)	1	138
NO_3-N (mg-N/L)	11	349
TP (mg-P/L)	1,910	1,682
Alkalinity (mg/L as CaCO3)	499	0
H_2S (mg/L)	0	0

This document is the property of CH2M HILL, Inc.
The expression of the information contained in thi
document is protected under U.S. copyright law.

Stoichiometric Parameter		Value	Default	Units
Hydrolysis of Particulate Substrate: X_S				
Production of Soluble Inert COD: S_I	f_{SI}	0.00		g COD/g COD
Heterotrophic Organisms: X_H				
Yield	Y_H	0.6660		g COD/g COD
Fraction of Lysis Inerts	f_{XI}	0.08		g COD/g COD
Phosphorus Accumulating Organisms: X_{PAO}				
Yield (biomass/PHA)	Y_{PAO}	0.5250		g COD/g COD
Phosphate release per PHA Stored	Y_{PO4}	0.40		g P/g COD
PHA requirement for PP storage	Y_{PHA}	0.20		g COD/g P
Fraction of Lysis Inerts	f_{XI}	0.08		g COD/g COD
Autotrophic Organisms: X_{AUT}				
Yield per NO_3-N	Y_A	0.19		g COD/g N
Fraction of Lysis Inerts	f_{XI}	0.08		g COD/g COD
Methanol Degraders-Population 1: X_{M1}				
Yield per MeOH COD	Y_{M1}	0.58		g COD/g COD
Fraction of Lysis Inerts	f_{XI}	0.10		g COD/g COD
Methanol Degraders-Population 2: X_{M2}				
Yield per MeOH COD	Y_{M2}	0.36		g COD/g COD
Fraction of Lysis Inerts	f_{XI}	0.10		g COD/g COD

Conversion Factors for Conservation Equatio		Value	Default	Units
Nitrogen Content of:	Check Delta	0.00		
Soluble Inert COD: S_I	i_{NSI}	0.0600	0.01	g N/g COD
Fermentable Substrate: S_F	i_{NSF}	0.0392	0.03	g N/g COD
Inert Particulate COD: X_I	i_{NXI}	0.0400	0.02	g N/g COD
Slowly Biodegradable Substrate: X_S	i_{NXS}	0.0392	0.04	g N/g COD
Biomass: X_H, X_{PAO}, X_{AUT}, X_{m1}, X_{m2}	i_{NBM}	0.0608	0.07	g N/g COD
Decay Products:, $X_{d,ae}$	i_{NXdae}	0.0608	0.02	g N/g COD
Phosphorus Content of:	Check Delta	0.00		
Soluble Inert COD: S_I	i_{PSI}	0.0000	0.00	g P/g COD
Fermentable Substrate: S_F	i_{PSF}	0.0000	0.01	g P/g COD
Inert Particulate COD: X_I	i_{PXI}	0.0073	0.01	g P/g COD
Slowly Biodegradable Substrate: X_S	i_{PXS}	0.0053	0.01	g P/g COD
Biomass: X_H, X_{PAO}, X_{AUT}	i_{PBM}	0.0200	0.02	g P/g COD
Decay Products:, $X_{d,ae}$	i_{PXdae}	0.0200	1.02	g P/g COD
TSS to COD Ratio for:				
Inert Particulate COD: X_I	i_{TSSXI}	0.7825	0.75	g TSS/g COD
Slowly Biodegradable Substrate: X_S	i_{TSSXS}	0.7825	0.75	g TSS/g COD
Biomass: X_H, X_{PAO}, X_{AUT}, X_{m1}, X_{m2}	i_{TSSBM}	0.7825	0.90	g TSS/g COD
Decay Products: $X_{d,ae}$	$i_{TSSXdae}$	0.7825	0.75	g TSS/g COD

Nitrogen Ratio Adjustmen			Ratio
Fermentable Substrate: S_F	i_{NSF}	0.0392	
Slowly Biodegradable Substrate: X_S	i_{NXS}	0.0392	1.00
Alternate Nitrogen Ratio			
Fermentable Substrate: S_F	i_{NSF}	0.0534	
Slowly Biodegradable Substrate: X_S	i_{NXS}	0.0356	1.50

Kinetic Parameters		Unit	Typical Values 20 °C	10 °C	Temperature 14.0 deg. C
Hydrolysis of Particulate Substrate: X_S					
k_h	(Hydrolysis Rate)	1/day	3.00	2.00	2.35
η_{NO3}	(Anoxic Reduction Factor)		0.60	0.60	0.60
η_{fe}	(Anaerobic Reduction Factor)		0.40	0.40	0.40
K_{O2}	(Oxygen Inhibition)	g O_2/m^3	0.20	0.20	0.20
K_{NO3}	(Nitrate Inhibition)	g N/m^3	0.50	0.50	0.50
K_x	(Particulate Inhibition)	g COD/g COD	0.10	0.10	0.10
Hydrolysis of Decay Products: X_{daa}					
K_{hdaa}	(Hydrolysis Rate)	1/d	1.20		0.94
K_{O2Ydaa}	(Oxygen Inhibition	g O_2/m^3	0.10		0.10
$K_{NO3Ydaa}$	(Nitrate Inhibition	g N/m^3	0.10		0.10
K_{Xdaa}	(Particulate Inhibition)	g X_{daa}/g X_H	0.10		0.10
Heterotrophic Organisms: X_H					
μ_H	(Max Growth Rate)	1/day	6.00	3.00	2.60
q_{fe}	(Max Fermentation Rate)	g COD/(g COD*d)	3.00	1.50	1.98
η_{NO3}	(Anoxic Reduction Factor)		0.80	0.80	0.80
b_H	(Decay Rate)	1/day	0.40	0.20	0.50
K_{O2}	(Oxygen Inhibition)	g O_2/m^3	0.20	0.20	0.20
K_F	(Growth on S_F)	g COD/m^3	4.00	4.00	2.00
K_{fe}	(Fermentation of S_F)	g COD/m^3	4.00	4.00	4.00
K_A	(Growth on S_A)	g COD/m^3	4.00	4.00	2.00
K_{NO3}	(Anoxic Growth)	g N/m^3	0.50	0.50	0.50
K_{NH4}	(Nitrogen Inhibition)	g N/m^3	0.05	0.05	0.05
K_P	(Phosphorus Inhibition)	g P/m^3	0.01	0.01	0.01
K_{ALK}	(Alkalininty Inhibition)	mole HCO_3^-/m^3	0.10	0.10	0.10
Phosphorus Accumulating Organisms: X_{PAO}					
q_{PHA}	(X_{PHA} Storage Rate)	g X_{PHA}/(g X_{PAO}*d)	3.00	2.00	6.00
q_{PP}	(X_{PP} Storage Rate)	g X_{PP}/(g X_{PAO}*d)	1.50	1.00	1.18
μ_{PAO}	(Max Growth Rate)	1/day	1.00	0.67	0.79
η_{NO3}	(Anoxic Reduction Factor)		0.60	0.60	0.60
b_{PAO}	(X_{PAO} Decay Rate)	1/day	0.20	0.10	0.10
b_{PP}	(X_{PP} Decay Rate)	1/day	0.20	0.10	0.10
b_{PHA}	(X_{PHA} Decay Rate)	1/day	0.20	0.10	0.10
K_{O2}	(Oxygen Inhibition)	g O_2/m^3	0.20	0.20	0.20
K_{NO3}	(Anoxic Growth)	g N/m^3	0.50	0.50	0.50
K_A	(Growth on S_A)	g COD/m^3	4.00	4.00	2.00
K_{NH4}	(Nitrogen Inhibition)	g N/m^3	0.05	0.05	0.0050
K_{PS}	(Phosphorus Inhibition of PP)	g P/m^3	0.20	0.20	0.20
K_P	(Phosphorus Inhibition of Growth)	g P/m^3	0.01	0.01	0.0050
K_{ALK}	(Alkalininty Inhibition)	mole HCO_3^-/m^3	0.10	0.10	0.10
K_{PP}	(Polyphosphate Inhibition)	g X_{PP}/g X_{PAO}	0.01	0.01	0.02
K_{MAX}	(Max Ratio of X_{PP}/X_{PAO})	g X_{PP}/g X_{PAO}	0.34	0.34	0.34
K_{IPP}	(Inhibition of PP Storage)	g X_{PP}/g X_{PAO}	0.02	0.02	0.02
K_{PHA}	(Saturation for PHA)	g X_{PHA}/g X_{PAO}	0.01	0.01	0.01
Autotrophic Organisms: X_{AUT}					
μ_{AUT}	(Maximum Growth Rate)	1/day	1.00	0.35	0.42
b_{AUT}	(Decay Rate)	1/day	0.15	0.05	0.04
K_{O2}	(Oxygen Inhibition)	g O_2/m_3	0.50	0.50	0.50
K_{NH4}	(Nitrogen Inhibition: SUBSTRATE)	g N/m^3	1.00	1.00	0.49
K_{ALK}	(Alkalininty Inhibition)	mole HCO_3^-/m^3	0.50	0.50	0.01
K_P	(Phosphorus Inhibition of Growth)	g P/m^3	0.01	0.01	0.0050
Precipitation					
k_{PRE}	(Rate of Phosphorus Precipitation)	m^3/(g $Me(OH)_3$*d)	1.00	1.00	2.00
k_{RED}	(Rate of Phosphous Redissolution)	1/day	0.60	0.60	0.10
K_{ALK}	(Alkalininty Inhibition	mole HCO_3^-/m^3	0.50	0.50	0.50
Methanol Degrading Organisms - Population 1					
μ_{M1}	(Maximum Growth Rate	1/day	3.88		7.00
η_{NO3M1}	(Anoxic Reduction Factor		0.21		0.20
b_{M1}	(Decay Rate)	1/day	0.18		0.20
K_{O2M1}	(Oxygen Inhibition	g O_2/m^3	0.20		0.50
K_{M1}	(Growth on Methanol)	g COD/m^3	4.00		4.00
K_{NO3M1}	(Anoxic Growth	g N/m^3	0.50	0.50	0.80
K_{NH4M1}	(Nitrogen Inhibition	g N/m^3	0.05		0.05
K_{ALKM1}	(Alkalinity Inhibition	mole HCO_3^-/m^3	0.10		0.10
K_{PM1}	(Phosphorus Inhibition	g P/m^3	0.01		0.01
Methanol Degrading Organisms - Population 2					
μ_{M2}	(Maximum Growth Rate	1/day	1.72		7.00
η_{NO3M2}	(Anoxic Reduction Factor		0.76		0.80
b_{M2}	(Decay Rate)	1/day	0.25		0.25
K_{O2M2}	(Oxygen Inhibition	g O_2/m^3	0.20		0.50
K_{M2}	(Growth on Methanol)	g COD/m^3	4.00		1.00
K_{NO3M2}	(Anoxic Growth)	g N/m^3	0.50	0.50	0.50
K_{NH4M2}	(Nitrogen Inhibition)	g N/m^3	0.05		0.05
K_{ALKM2}	(Alkalinity Inhibition)	mole HCO_3^-/m^3	0.10		0.10
K_{PM2}	(Phosphorus Inhibition	g P/m^3	0.01		0.01

This document is the property of CH2M HILL, Inc.
The expression of the information contained in thi
document is protected under U.S. copyright law.

Attachment A

Model Results Summary for Selected Alternative and Baqa'a Camp WWTP - 2035

Projected 2035 Average Daily Flow = 18,212 m^3/day

Projected 2035 Maximum Month Flow = 25,495 m^3/day

Estimated Equipment Sizing:

- 8 process reactors at 7,456 m^3 each
- 2 circular clarifiers at 30 m diameter each
- 18,293 m^3 total aerobic digester volume

Use Instructions: See Comment in this cell.

Linked Model Input	Current Run:	Comments	Scenarios: Max Month (winter)	Comments	Max Month (summer)	Comments	Average Day	Comments	For Class 1 Reliability	Comments
Flow (m3/day)	25,495	MM	25,495	MM	25,495	MM	18,212	AD Flow	19,121	75% of MM
Diurnal Flow Peaking Factor	1.43	MxD:MM	1.43	MxD:MM	1.43	MxD:MM	2	MxD:AD	1.43	Same as MxD:MM
CBOD5 (kg/day)	20,383	MM loading	20,383	MM loading	20,383	MM loading	14,559	AD Loading	15,287	75% of MM
TSS (kg/day)	22,930	MM loading	22,930	MM loading	22,930	MM loading	16,379	AD Loading	17,198	75% of MM
% VS	75%		75%		75%		75%		75%	
TKN (kg/day)	3,822	MM loading	3,822	MM loading	3,822	MM loading	2,730	AD Loading	2,866	75% of MM
Ammonia -N (kg/day)	2,293	MM loading	2,293	MM loading	2,293	MM loading	1,638	AD Loading	1,720	75% of MM
Total Phosphate - P (kg/day)	637	MM loading	637	MM loading	637	MM loading	455	AD Loading	478	75% of MM
Alkalinity (kg/day)	25,478	Assumed at 1000 mg/L	25,478	Assumed at 1000 mg/L	25,478	Assumed at 1000 mg/L	18,200	Assumed at 1000 mg/L	19,109	Assumed at 1000 mg/L
Hydrogen Sulfide (kg/day)	611	Assumed at 24 mg/L	611	Assumed at 24 mg/L	611	Assumed at 24 mg/L	437	Assumed at 24 mg/L	459	Assumed at 24 mg/L
Number of Aeration Basin Trains Online	8		8		8		8		8	
Volume per Train (m3)	7,456		7,456		7,456		7,456		7,456	
Total Aeration Basin Volume in Service (m3)	59,652		59,652		59,652		59,652		59,652	
SRT	10		10		10		10		10	
System pH	7.2		7.2		7.2		7.2		7.2	
Temperature °C	14	Minimum Month	14	Minimum Month	24.6	Maximum Month	16.8	Annual Average	14	Minimum Month
Nitrified Recycle Rate (% of Aer Basin influent flow)	625%		625%		625%		625%		625%	
Number of Secondary Clarifiers Online	2		2		2		2		1	
Surface Area per Secondary Clarifier (sq m)	725		725		725		725		725	
Total Secondary Clarifier Area (sq m)	1449		1449		1449		1449		725	
Secondary Clarifier Diameter (m)	30		30		30		30		30	
SVI (mL/g)	150		150		150		150		150	
Average Secondary Effluent TSS (mg/L)	15	Fixed	15	Fixed	15	Fixed	15	Fixed	15	Fixed
Peak Secondary Effluent TSS (mg/L)	20	Fixed	20	Fixed	20	Fixed	20	Fixed	20	Fixed
Average RAS Underflow Rate (% of Inf Q)	46.1%	Calculated	46.1%	Calculated	46.1%	Calculated	44.5%	Calculated	44.8%	Calculated
Peak RAS Underflow Rate (% of Inf Q)	64.1%	Calculated	64.1%	Calculated	63.8%	Calculated	46.6%	Calculated	62.5%	Calculated
Thickener Solids Capture (%)	85%		85%		85%		85%		85%	
Thickened Sludge Concentration (mg/L)	30,000		30,000		30,000		30,000		30,000	
AerDig1 Volume (m3)	18,293		18,293		18,293		18,293		18,293	
AerDig1 Temperature (°C)	14	Minimum Month	14	Minimum Month	24.6	Maximum Month	16.8	Annual Average	14	Minimum Month
AerDig1 DO (mg/L)	2		2		2		2		2	
AerDig1 % Denitrification	20%		20%		20%		20%		20%	
Dewatering Solids Capture (%)	95%		95%		95%		95%		95%	
Dewatered Sludge Concentration (%)	20%		20%		20%		20%		20%	
Results										
SRT	10.0		10.0		10.0		10.0		10.0	
Final Anoxic Zone NO3	0.13	want < 0.5	0.13	want < 0.5	0.05	want < 0.5	0.09	want < 0.5	0.11	want < 0.5
Secondary Effluent TSS (mg/L)	15.0	want < 60 (goal = 42)	15.0	want < 60 (goal = 42)	15.0	want < 60 (goal = 42)	15.0	want < 60 (goal = 42)	15.0	want < 60 (goal = 42)
Secondary Effluent CBOD5 (mg/L)	4.73	want < 60 (goal = 42)	4.73	want < 60 (goal = 42)	4.15	want < 60 (goal = 42)	4.48	want < 60 (goal = 42)	4.64	want < 60 (goal = 42)
Secondary Effluent COD (mg/L)	60.3	want < 150, (goal = 105.0)	60.3	want < 150, (goal = 105.0)	59.8	want < 150, (goal = 105.0)	60.0	want < 150, (goal = 105.0)	60.2	want < 150, (goal = 105.0)
Secondary Effluent TN (mg/L)	16.1	want < 70, (goal = 49.0)	16.1	want < 70, (goal = 49.0)	16.1	want < 70, (goal = 49.0)	15.7	want < 70, (goal = 49.0)	15.8	want < 70, (goal = 49.0)
Secondary Effluent NH3-N (mg/L)	0.15		0.15		0.08		0.09		0.15	
Secondary Effluent NO3-N (mg/L)	12.471	want < 18 (goal is 12.6)	12.471	want < 18 (goal is 12.6)	12.497	want < 18 (goal is 12.6)	12.122	want < 18 (goal is 12.6)	12.172	want < 18 (goal is 12.6)
Secondary Effluent TP (mg/L)	5.44	want < 15 (goal = 10.5)	5.45	want < 15 (goal = 10.5)	1.90	want < 15 (goal = 10.5)	5.63	want < 15 (goal = 10.5)	6.68	want < 15 (goal = 10.5)
Influent COD (mg/L)	1,568	~1320 mg/L per ops data	1,568	~1320 mg/L per ops data	1,568	~1320 mg/L per ops data	1,568	~1320 mg/L per ops data	1,568	~1320 mg/L per ops data
Corresponding Average MLSS (mg/L)	3,587	want < 3600 at MM	3,588	want < 3600 at MM	3,557	want < 3600 at MM	2,596	want < 3600 at MM	2,715	want < 3600 at MM
Secondary Influent MLSS (mg/L)	3,568		3,569		3,536		2,579		2,697	
Nitrified Recycle Rate (m3/day)	172,630		172,630		172,631		127,807		133,393	
Solids Loading Rate To Secondary Clarifiers (kg/day-sq m)	99.42		99.41		98.52		52.57		115.04	
RAS Rate (m3/day)	12,755		12,746		12,746		9,092		9,561	
Corresponding WAS (kg/day)	21,020		21,022		20,841		15,214		15,910	
Combined Thickened Feed Sludge to Aerobic Dig. (kg/day)	17,867		17,869		17,715		12,932		13,523	
Digester Volatile Solids Loading Rate (kg/day-m3)	0.57		0.57		0.53		0.40		0.43	
Digester SRT	30.72		30.71		30.98		42.44		40.58	
Model Prediction of VS Destruction (combined)	39.59%		39.59%		37.39%		41.40%		41.63%	
Digester Alkalinity Limited?	yes		yes		yes		yes		yes	
SOUR in Digester (mg O2/hour/gram TS)	0.65	want < 1.5 at 20 C, goal = 1.13	0.65	want < 1.5 at 20 C, goal = 1.13	0.57	want < 1.5 at 20 C, goal = 1.13	0.50	want < 1.5 at 20 C, goal = 1.13	0.54	want < 1.5 at 20 C, goal = 1.13
Dewatered Solids From Plant (kg/day)	11,297.74		11,299.65		11,324.18		7,812.11		8,226.73	
PBNR AOR (kg/day)	31,203		31,203		32,334		22,501		23,358	
PBNR SOR (kg/day)	92,574		92,575		110,757		62,439		63,325	
PBNR Total Required Air Rate in Zones 3-5 (N*m3/hr)	38,087		38,087		46,144		27,214		26,973	

This document is the property of CH2M HILL, Inc.
The expression of the information contained in this
document is protected under U.S. copyright law.

Stoichiometric Parameter:		Value	Default	Units
Hydrolysis of Particulate Substrate: X_S				
Production of Soluble Inert COD: S_I	f_{SI}	0.00		g COD/g COD
Heterotrophic Organisms: X_H				
Yield	Y_H	0.6660		g COD/g COD
Fraction of Lysis Inerts	f_{XI}	0.08		g COD/g COD
Phosphorus Accumulating Organisms: X_{PAO}				
Yield (biomass/PHA)	Y_{PAO}	0.6250		g COD/g COD
Phoaphate release per PHA Stored	Y_{POH}	0.40		g P/g COD
PHA requirement for PP storage	Y_{PHA}	0.20		g COD/g P
Fraction of Lysis Inerts	f_X	0.08		g COD/g COD
Autotrophic Organisms: X_{AUT}				
Yield per NO_3-N	Y_A	0.19		g COD/g N
Fraction of Lysis Inerts	f_{XI}	0.08		g COD/g COD
Methanol Degraders-Population 1: X_{M1}				
Yield per MeOH COD	Y_{M1}	0.58		g COD/g COD
Fraction of Lysis Inerts	f_{XI}	0.10		g COD/g COD
Methanol Degraders-Population 2: X_{M2}				
Yield per MeOH COD	Y_{M2}	0.36		g COD/g COD
Fraction of Lysis Inerts	f_{XI}	0.10		g COD/g COD

Conversion Factors for Conservation Equatio		Value	Default	Units
Nitrogen Content of:	Check Delta	0.00		
Soluble Inert COD: S_I	i_{NSI}	0.0600	0.01	g N/g COD
Fermentable Substrate: S_F	i_{NSF}	0.0392	0.03	g N/g COD
Inert Particulate COD: X_I	i_{NXI}	0.0400	0.02	g N/g COD
Slowly Biodegradable Substrate: X_S	i_{NXS}	0.0392	0.04	g N/g COD
Biomass: X_H, X_{PAO}, X_{AUT}, X_{m1}, X_{m2}	i_{NBM}	0.0606	0.07	g N/g COD
Decay Products:, $X_{c,aa}$	i_{NXdec}	0.0606	0.02	g N/g COD
Phosphorus Content of:	Check Delta	0.00		
Soluble Inert COD: S_I	i_{PSI}	0.0000	0.00	g P/g COD
Fermentable Substrate: S_F	i_{PSF}	0.0000	0.01	g P/g COD
Inert Particulate COD: X_I	i_{PXI}	0.0073	0.01	g P/g COD
Slowly Biodegradable Substrate: X_S	i_{PXS}	0.0053	0.01	g P/g COD
Biomass: X_H, X_{PAO}, X_{AUT}	i_{PBM}	0.0200	0.02	g P/g COD
Decay Products:, $X_{c,aa}$	i_{PXdec}	0.0200	1.02	g P/g COD
TSS to COD Ratio for:				
Inert Particulate COD: X_I	i_{TSSX}	0.7825	0.75	g TSS/g COD
Slowly Biodegradable Substrate: X_S	i_{TSSXS}	0.7825	0.75	g TSS/g COD
Biomass: X_H, X_{PAO}, X_{AUT}, X_{m1}, X_{m2}	i_{TSSBM}	0.7825	0.90	g TSS/g COD
Decay Products: $X_{c,aa}$	$i_{TSSXdec}$	0.7825	0.75	g TSS/g COD

Nitrogen Ratio Adjustmen			Ratio
Fermentable Substrate: S_F	i_{NSF}	0.0392	
Slowly Biodegradable Substrate: X_S	i_{NXS}	0.0392	1.00
Alternate Nitrogen Ratio			
Fermentable Substrate: S_F	i_{NSF}	0.0534	
Slowly Biodegradable Substrate: X_S	i_{NXS}	0.0356	1.50

Kinetic Parameters	Unit	Typical Values 20 °C	10 °C	Temperature 14.0 deg. C
Hydrolysis of Particulate Substrate: X_S				
k_h (Hydrolysis Rate)	1/day	3.00	2.00	2.35
η_{NO3} (Anoxic Reduction Factor)		0.60	0.60	0.60
η_{fe} (Anaerobic Reduction Factor)		0.40	0.40	0.40
K_{O2} (Oxygen Inhibition)	g O_2/m^3	0.20	0.20	0.20
K_{NO3} (Nitrate Inhibition)	g N/m^3	0.50	0.50	0.50
K_X (Particulate Inhibition)	g COD/g COD	0.10	0.10	0.10
Hydrolysis of Decay Products: X_{aa}				
K_{hdaa} (Hydrolysis Rate)	1/d	1.20		0.94
K_{O2Ydaa} (Oxygen Inhibition	g O_2/m^3	0.10		0.10
$K_{NO3Ydaa}$ (Nitrate Inhibition	g N/m^3	0.10		0.10
K_{Xdaa} (Particulate Inhibition)	g X_{daa}/g X_H	0.10		0.10
Heterotrophic Organisms: X_H				
μ_H (Max Growth Rate)	1/day	6.00	3.00	2.60
q_{fe} (Max Fermentation Rate)	g COD/(g COD*d)	3.00	1.50	1.98
η_{NO3} (Anoxic Reduction Factor)		0.80	0.80	0.80
b_H (Decay Rate)	1/day	0.40	0.20	0.50
K_{O2} (Oxygen Inhibition)	g O_2/m^3	0.20	0.20	0.20
K_F (Growth on S_F)	g COD/m^3	4.00	4.00	2.00
K_{fe} (Fermentation of S_F)	g COD/m^3	4.00	4.00	4.00
K_A (Growth on S_A)	g COD/m^3	4.00	4.00	2.00
K_{NO3} (Anoxic Growth)	g N/m^3	0.50	0.50	0.50
K_{NH4} (Nitrogen Inhibition)	g N/m^3	0.05	0.05	0.05
K_P (Phosphorus Inhibition)	g P/m^3	0.01	0.01	0.01
K_{ALK} (Alkalininty Inhibition)	mole HCO_3^-/m^3	0.10	0.10	0.10
Phosphorus Accumulating Organisms: X_{PAO}				
q_{PHA} (X_{PHA} Storage Rate)	g X_{PHA}/(g X_{PAO}*d)	3.00	2.00	6.00
q_{PP} (X_{PP} Storage Rate)	g X_{PP}/(g X_{PAO}*d)	1.50	1.00	1.18
μ_{PAO} (Max Growth Rate)	1/day	1.00	0.67	0.79
η_{NO3} (Anoxic Reduction Factor)		0.60	0.60	0.60
b_{PAO} (X_{PAO} Decay Rate)	1/day	0.20	0.10	0.10
b_{PP} (X_{PP} Decay Rate)	1/day	0.20	0.10	0.10
b_{PHA} (X_{PHA} Decay Rate)	1/day	0.20	0.10	0.10
K_{O2} (Oxygen Inhibition)	g O_2/m^3	0.20	0.20	0.20
K_{NO3} (Anoxic Growth)	g N/m^3	0.50	0.50	0.50
K_A (Growth on S_A)	g COD/m^3	4.00	4.00	2.00
K_{NH4} (Nitrogen Inhibition)	g N/m^3	0.05	0.05	0.0050
K_{PS} (Phosphorus Inhibition of PP)	g P/m^3	0.20	0.20	0.20
K_P (Phosphorus Inhibition of Growth)	g P/m^3	0.01	0.01	0.0050
K_{ALK} (Alkalininty Inhibition)	mole HCO_3^-/m^3	0.10	0.10	0.10
K_{PP} (Polyphosphate Inhibition)	g X_{PP}/g X_{PAO}	0.01	0.01	0.02
K_{MAX} (Max Ratio of X_{PP}/X_{PAO})	g X_{PP}/g X_{PAO}	0.34	0.34	0.34
K_{IPP} (Inhibition of PP Storage)	g X_{PP}/g X_{PAO}	0.02	0.02	0.02
K_{PHA} (Saturation for PHA)	g X_{PHA}/g X_{PAO}	0.01	0.01	0.01
Autotrophic Organisms: X_{AUT}				
μ_{AUT} (Maximum Growth Rate)	1/day	1.00	0.35	0.42
b_{AUT} (Decay Rate)	1/day	0.15	0.05	0.04
K_{O2} (Oxygen Inhibition)	g O_2/m_3	0.50	0.50	0.50
K_{NH4} (Nitrogen Inhibition: SUBSTRATE)	g N/m^3	1.00	1.00	0.49
K_{ALK} (Alkalininty Inhibition)	mole HCO_3^-/m^3	0.50	0.50	0.01
K_P (Phosphorus Inhibition of Growth)	g P/m^3	0.01	0.01	0.0050
Precipitation				
k_{PRE} (Rate of Phosphorus Precipitation)	m^3/(g $Me(OH)_3$*d)	1.00	1.00	2.00
k_{RED} (Rate of Phosphous Redissolution)	1/day	0.60	0.60	0.10
K_{ALK} (Alkalininty Inhibition	mole HCO_3^-/m^3	0.50	0.50	0.50
Methanol Degrading Organisms - Population 1				
μ_{M1} (Maximum Growth Rate	1/day	3.88		7.00
η_{NO3M1} (Anoxic Reduction Factor		0.21		0.20
b_{M1} (Decay Rate)	1/day	0.18		0.20
K_{O2M1} (Oxygen Inhibition	g O_2/m^3	0.20		0.50
K_{M1} (Growth on Methanol)	g COD/m^3	4.00		4.00
K_{NO3M1} (Anoxic Growth)	g N/m^3	0.50	0.50	0.80
K_{NH4M1} (Nitrogen Inhibition	g N/m^3	0.05		0.05
K_{ALKM1} (Alkalinity Inhibition	mole HCO_3^-/m^3	0.10		0.10
K_{PM1} (Phosphorus Inhibition	g P/m^3	0.01		0.01
Methanol Degrading Organisms - Population 2				
μ_{M2} (Maximum Growth Rate	1/day	1.72		7.00
η_{NO3M2} (Anoxic Reduction Factor		0.76		0.80
b_{M2} (Decay Rate)	1/day	0.25		0.25
K_{O2M2} (Oxygen Inhibition	g O_2/m^3	0.20		0.50
K_{M2} (Growth on Methanol)	g COD/m^3	4.00		1.00
K_{NO3M2} (Anoxic Growth)	g N/m^3	0.50	0.50	0.50
K_{NH4M2} (Nitrogen Inhibition)	g N/m^3	0.05		0.05
K_{ALKM2} (Alkalinity Inhibition)	mole HCO_3^-/m^3	0.10		0.10
K_{PM2} (Phosphorus Inhibition	g P/m^3	0.01		0.01

This document is the property of CH2M HILL, Inc.
The expression of the information contained in thi
document is protected under U.S. copyright law.

Mass Balance for Average Flow Conditions

Constituent	Raw Wastewater (RW)	Main Recycle Influent (RecyI)	Main Recycled Stream (Recycle)	Main Combined Recycle Effluent (RecyE)	Main Bioreactor Influent (BI)	Main Secondary Clarifier Influent (SI)	Main Secondary Clarifier Effluent (SE)	Plant Effluent (PLE)	Main WAS	GBT WAS Thickener Influent (TWASI)	GBT Thickened WAS (TWAS)	AerDig1 Aerobic Digester Influent (ADI)	AerDig1 Aerobic Digester Effluent (ADE)	BFP Dewatering Influent (DWI)	BFP Dewatered Sludge (DWE)	Biosolids to Dispoal	GBT WAS Thickening Recycle (TWASR)	BFP Dewatering Recycle (DWR)	Recy Combined Discharge	Ender
Flow (m3/day)	25,495	25,495	2,129	27,624	27,624	40,381	25,438	25,438	2,186	2,186	596	596	596	596	56	56	1,590	539	2,129	
Carbonaceous BOD_5 (kg/day)	20,383	20,383	955	21,338	21,338	40,082	120	120	5,845	5,845	4,968	4,968	1,555	1,555	1,477	1,477	877	78	955	
COD (kg/day)	39,983	39,983	3,138	43,120	43,120	120,413	1,535	1,535	17,387	17,387	14,719	14,719	8,902	8,902	8,433	8,433	2,669	469	3,138	
TSS (kg/day)	22,931	22,931	3,748	26,679	26,679	144,092	382	382	21,019	21,019	17,866	17,866	11,892	11,892	11,297	11,297	3,153	595	3,748	
VSS (kg/day)	17,198	17,198	2,138	19,336	19,336	83,432	221	221	12,171	12,171	10,345	10,345	6,249	6,249	5,937	5,937	1,826	312	2,138	
TKN (kg-N/day)	3,822	3,822	244	4,066	4,066	6,399	93	93	922	922	780	780	596	596	495	495	142	102	244	
NH_3-N (kg-N/day)	2,293	2,293	75	2,368	2,368	6	4	4	0	0	0	0	82	82	8	8	0	74	75	
NO_3-N (kg-N/day)	0	0	208	208	208	504	317	317	27	27	7	7	208	208	20	20	20	188	208	
TP (kg-P/day)	637	637	686	1,323	1,323	8,243	139	139	1,185	1,185	1,002	1,002	1,002	1,002	500	500	184	502	686	
Alkalinity (kg/day as $CaCO_3$)	25,478	25,478	1,135	26,613	26,613	28,821	18,156	18,156	1,560	1,560	425	425	0	0	0	0	1,135	0	1,135	
H_2S (kg/day)	611	611	0	611	611	0	0	0	0	0	0	0	0	0	0	0	0	0	0	
BOD_5 (mg/L)	799	799	449	772	772	993	5	5	2,674	2,674	8,341	8,341	2,611	2,611	26,153	26,153	552	144	449	
COD (mg/L)	1,568	1,568	1,474	1,561	1,561	2,982	60	60	7,956	7,956	24,715	24,715	14,948	14,948	149,292	149,292	1,678	870	1,474	
TSS (mg/L)	899	899	1,760	966	966	3,568	15	15	9,617	9,617	30,000	30,000	19,968	19,968	200,000	200,000	1,983	1,103	1,760	
VSS (mg/L)	675	675	1,004	700	700	2,066	9	9	5,569	5,569	17,371	17,371	10,493	10,493	105,102	105,102	1,148	580	1,004	
TKN (mg-N/L)	150	150	114	147	147	158	4	4	422	422	1,310	1,310	1,001	1,001	8,759	8,759	89	188	114	
NH_3-N (mg-N/L)	90	90	35	86	86	0	0	0	0	0	0	0	138	138	138	138	0	138	35	
NO_3-N (mg-N/L)	0	0	98	8	8	12	12	12	12	12	12	12	349	349	349	349	12	349	98	
TP (mg-P/L)	25	25	322	48	48	204	5	5	542	542	1,682	1,682	1,682	1,682	8,847	8,847	115	931	322	
Alkalinity (mg/L as CaCO3)	999	999	533	963	963	714	714	714	714	714	714	714	0	0	0	0	714	0	533	
H_2S (mg/L)	24	24	0	22	22	0	0	0	0	0	0	0	0	0	0	0	0	0	0	

Mass Balance for Diurnal Peak Flow Conditions

Constituent	Raw Wastewater (RW)	Main Recycle Influent (RecyI)	Main Recycled Stream (Recycle)	Main Combined Recycle Effluent (RecyE)	Main Bioreactor Influent (BI)	Main Secondary Clarifier Influent (SI)	Main Secondary Clarifier Effluent (SE)		Main WAS	GBT WAS Thickener Influent (TWASI)	GBT Thickened WAS (TWAS)	AerDig1 Aerobic Digester Influent (ADI)	AerDig1 Aerobic Digester Effluent (ADE)	BFP Dewatering Influent (DWI)	BFP Dewatered Sludge (DWE)		GBT WAS Thickening Recycle (TWASR)	BFP Dewatering Recycle (DWR)	Recy Combined Discharge	
Flow (m3/day)	36,458	36,458	3,286	39,744	39,744	65,239	36,374	36,374	3,369	3,369	876	876	876	876	83	83	2,493	793	3,286	
Carbonaceous BOD_5 (kg/day)	26,498	26,498	1,408	27,906	27,906	48,254	140	140	5,617	5,617	7,326	7,326	2,288	2,288	2,174	2,174	1,293	114	1,408	
COD (kg/day)	51,977	51,977	4,597	56,574	56,574	220,376	2,171	2,171	25,472	25,472	21,565	21,565	13,099	13,099	12,409	12,409	3,907	690	4,597	
TSS (kg/day)	29,809	29,809	5,514	35,324	35,324	265,683	727	727	30,929	30,929	26,290	26,290	17,499	17,499	16,624	16,624	4,639	875	5,514	
VSS (kg/day)	22,357	22,357	3,135	25,492	25,492	153,203	419	419	17,835	17,835	15,160	15,160	9,196	9,196	8,736	8,736	2,675	460	3,135	
TKN (kg/day)	4,969	4,969	408	5,376	5,376	11,442	164	164	1,317	1,317	1,112	1,112	877	877	728	728	205	149	408	
NH_3-N (kg-N/day)	2,981	2,981	112	3,093	3,093	71	39	39	4	4	1	1	121	121	11	11	3	110	112	
NO_3-N (kg-N/day)	0	0	304	304	304	728	406	406	38	38	10	10	306	306	29	29	28	277	304	
TP (kg-P/day)	828	828	1,045	1,873	1,873	17,172	214	214	1,980	1,980	1,673	1,673	1,474	1,474	735	735	306	739	1,045	
Alkalinity (kg/day as $CaCO_3$)	33,122	33,122	1,245	34,366	34,366	32,568	18,158	18,158	1,682	1,682	437	437	0	0	0	0	1,245	0	1,245	
H_2S (kg/day)	795	795	0	795	795	0	0	0	0	0	0	0	0	0	0	0	0	0	0	
BOD_5 (mg/L)	727	727	428	702	702	740	4	4	1,667	1,667	8,360	8,360	2,611	2,611	26,153	26,153	519	144	428	
COD (mg/L)	1,426	1,426	1,399	1,423	1,423	3,378	60	60	7,560	7,560	24,608	24,608	14,948	14,948	149,292	149,292	1,567	870	1,399	
TSS (mg/L)	818	818	1,678	889	889	4,072	20	20	9,179	9,179	30,000	30,000	19,968	19,968	200,000	200,000	1,861	1,103	1,678	
VSS (mg/L)	613	613	954	641	641	2,348	12	12	5,293	5,293	17,299	17,299	10,493	10,493	105,102	105,102	1,073	580	954	
TKN (mg-N/L)	136	136	124	135	135	175	4	4	391	391	1,269	1,269	1,001	1,001	8,759	8,759	82	188	124	
NH_3-N (mg-N/L)	82	82	34	78	78	1	1	1	1	1	1	1	138	138	138	138	1	138	34	
NO_3-N (mg-N/L)	0	0	93	8	8	11	11	11	11	11	11	11	349	349	349	349	11	349	93	
TP (mg-P/L)	0	23	318	47	47	263	6	6	588	588	1,910	1,910	1,682	1,682	8,847	8,847	123	931	318	
Alkalinity (mg/L as CaCO3)	908	908	379	865	865	499	499	499	499	499	499	499	0	0	0	0	499	0	379	
H_2S (mg/L)	22	22	0	20	20	0	0	0	0	0	0	0	0	0	0	0	0	0	0	

This document is the property of CH2M HILL, Inc.
The expression of the information contained in this
document is protected under U.S. copyright law.

AerDig1
Aerobic Digester Module

Average Conditions

Constituent	Influent	Effluent
Flow (m3/day)	596	596
Carbonaceous BOD_5 (kg/day)	4,968	1,555
Particulate	509	950
Heterotrophs	3,521	429
PAOs	937	176
PHA	0	0
Filtrate	0	0
COD (kg/day)	14,719	8,902
Particulate Bio	373	0
Particulate Non-Bio	5,026	5,026
Decay Prod Aer/Anx	465	1,756
Decay Prod Anaerobic	0	0
Heterotrophs	5,853	793
Autotrophs	385	183
PAOs	2,588	1,115
PHA	1	0
Soluble Bio	1	0
VFA	0	0
Colloidal Bio	0	0
Soluble Non-Bio	28	28
Colloidal Non-Bio	0	0
TSS (kg/day)	17,866	11,892
Biodegradable	292	0
Non-Biodegradable	7,803	7,803
Decay Prod Aer/Anx	363	1,374
Decay Prod Anaerobic	0	0
Metal Hydroxide	0	0
Metal Phosphate	0	0
Heterotrophs	4,580	620
Autotrophs	302	144
PAOs	2,025	872
PHA	1	0
Poly-P	2,502	1,078
VSS (kg/day)	10,345	6,249
Biodegradable	263	0
Non-Biodegradable	3,539	3,539
Decay Prod Aer/Anx	327	1,237
Decay Prod Anaerobic	0	0
Metal Hydroxide	0	0
Heterotrophs	4,122	558
Autotrophs	271	129
PAOs	1,822	785
PHA	1	0
TKN (kg-N/day)	780	596
NH_3-N (kg-N/day)	0	82
Particulate Bio Org N	15	0
Non-Bio Part Org N	201	279
Decay Prod Aer/Anx	28	106
Decay Prod Anaerobic	0	0
Heterotrophs	354	48
Autotrophs	23	11
PAOs	157	68
Non-Bio Soluble Org. N	2	2
Non-Bio Colloidal Org. N	0	0
Soluble Bio Org N	0	0
Colloidal Bio Org N	0	0
NO_3-N (kg-N/day)	7	208
TP (kg-P/day)	1,002	1,002
Bio Particulate	2	0
Non-Bio Particulate	37	63
Decay Prod Aer/Anx	9	35
Decay Prod Anaerobic	0	0
Metal Phosphate	0	0
Heterotrophs	117	16
Autotrophs	8	4
PAOs	52	22
Poly-P	775	334
Ortho-PO_4	3	529
Alkalinity (kg/day as CaCO)	425	0
H_2S (kg/day)	0	0
BOD_5 (mg/L)	8,341	2,611
COD (mg/L)	24,715	14,948
TSS (mg/L)	30,000	19,968
VSS (mg/L)	17,371	10,493
TKN (mg-N/L)	1,310	1,001
NH_3-N (mg-N/L)	0	138
NO_3-N (mg-N/L)	12	349
TP (mg-P/L)	1,682	1,682
Alkalinity (mg/L as CaCO3)	714	0
H_2S (mg/L)	0	0

Constituent	Influent	Effluent
Flow (m3/day)	596	596
Carbonaceous BOD_5 (kg/day)	4,968	1,555
Particulate	509	950
Heterotrophs	3,521	429
PAOs	937	176
PHA	0	0
Filtrate	0	0
COD (kg/day)	14,719	8,902
Particulate Bio	373	0
Particulate Non-Bio	5,026	5,026
Decay Prod Aer/Anx	465	1,756
Decay Prod Anaerobic	0	0
Heterotrophs	5,853	793
Autotrophs	385	183
PAOs	2,588	1,115
PHA	1	0
Soluble Bio	1	0
VFA	0	0
Colloidal Bio	0	0
Soluble Non-Bio	28	28
Colloidal Non-Bio	0	0
TSS (kg/day)	17,866	11,892
Biodegradable	292	0
Non-Biodegradable	7,803	7,803
Decay Prod Aer/Anx	363	1,374
Decay Prod Anaerobic	0	0
Metal Hydroxide	0	0
Metal Phosphate	0	0
Heterotrophs	4,580	620
Autotrophs	302	144
PAOs	2,025	872
PHA	1	0
Poly-P	2,502	1,078
VSS (kg/day)	10,345	6,249
Biodegradable	263	0
Non-Biodegradable	3,539	3,539
Decay Prod Aer/Anx	327	1,237
Decay Prod Anaerobic	0	0
Metal Hydroxide	0	0
Heterotrophs	4,122	558
Autotrophs	271	129
PAOs	1,822	785
PHA	1	0
TKN (kg-N/day)	780	596
NH_3-N (kg-N/day)	0	82
Particulate Bio Org N	15	0
Non-Bio Part Org N	201	279
Decay Prod Aer/Anx	28	106
Decay Prod Anaerobic	0	0
Heterotrophs	354	48
Autotrophs	23	11
PAOs	157	68
Non-Bio Soluble Org. N	2	2
Non-Bio Colloidal Org. N	0	0
Soluble Bio Org N	0	0
Colloidal Bio Org N	0	0
NO_3-N (kg-N/day)	7	208
TP (kg-P/day)	1,002	1,002
Bio Particulate	2	0
Non-Bio Particulate	37	63
Decay Prod Aer/Anx	9	35
Decay Prod Anaerobic	0	0
Metal Phosphate	0	0
Heterotrophs	117	16
Autotrophs	8	4
PAOs	52	22
Poly-P	775	334
Ortho-PO_4	3	529
Alkalinity (kg/day as CaCO)	425	0
H_2S (kg/day)	0	0

Facility Operating Parameters		
Bioreactor Volume, m3		18,292.91
Minimum Valid SRT, days		3.00
SRT, Days		30.72
Temperature, oC		14
Volatile Solids Loading (kg VSS/m3-day)		0.57
Volatile Solids Reduction, %		39.59%
TSS Reduction %		33.44%
SOUR mg-O2/(g-VSS x hour) at 20 oC		1.24
SOUR mg-O2/(g-TSS x hour) at 20 oC		0.65
SOUR mg-O2/(g-VSS x hour) with nitrification at 20 oC		1.74
SOUR mg-O2/(g-TSS x hour) with nitrification at 20 oC		0.92
Total AOR (kgO2/day)		6,828
% denitrification		20%
Nutrients		
Nitrogen Released Due to Digestion (transformed to NH3) (kg/day)		334.31
Nitrogen Nitrified (Kg/day)		252.15
Nitrogen Denitrified (Kg/day)		51.92
Alkalinity in Feed (Kg/day)		425
Alkalinity Released Due to Digestion (Kg/day)		1,204
Alkalinity Lost Through Nitrification (Kg/day)		1,815
Alkalinity Produced Through Denitrification (Kg/day)		187
Alkalinity Discharged (Kg/day)		0
Kinetic Limitation on Nitrification		
DO, mg/L		2
Maximum Specific Growth Rate (μ_{Max}), Day^{-1} at Operational DO		0.3408
Ammonia in Digester Effluent Due to Kinetic Limitations		
	a	0.26
	b	-1,298.57
	c	21.36
Effluent Ammonia (mg-N/L) for Kinetic Limitation		0.02
Potential Nitrification Associated with Kinetics (Kg/day)		334.39

Aerobic Biological Kinetics	
Parameter	**Temperature**
Heterotrophs	
Maximum Specific Growth Rate (μ_{Max}), Day^{-1}	2.60
Half Saturation for Organics (K_s), mg BOD_5/L	3.13
Half Saturation for Organics (K_s), mg Bio COD/L	5.00
True Yield (Y_h), mg COD/mg COD (aerobic)	0.67
Decay Rate (b_H), Day^{-1}	0.22
Inactive Fraction (f_D)	0.19
Volatile Fraction, % of TSS	0.90
COD/VSS Ratio, mg COD/mg VSS	1.42
Nitrogen Content, N/VSS (%)	0.09
Phosphorus Content, P/VSS (%)	0.03
Autotrophs	
Maximum Specific Growth Rate (μ_{Max}), Day^{-1}	0.43
Half Saturation for NH_3-N (K_{NH}), mg-N/L	0.49
Half Saturation for O_2 (K_O), mg-O_2/L	0.50
True Yield (Y_A), mg TSS/mg NH_3-N	0.15
True Yield (Y_A), mg COD/mg NH_3-N	0.19
Decay Rate (b_A), Day^{-1}	0.04
Volatile Fraction, % of TSS	0.90
COD/VSS Ratio, mg COD/mg VSS	1.42
Nitrogen Content, N/VSS (%)	0.09
Phosphorus Content, P/VSS (%)	0.03
PAOs	
True Yield (Y_H), mg TSS/mg BOD_5	0.76
True Yield (Y_H), mg COD/mg COD	0.62
Decay Rate (b_H), Day^{-1}	0.04
Inactive Fraction (f_D)	0.19
Volatile Fraction, % of TSS	0.90
COD/VSS Ratio, mg COD/mg VSS	1.42
Nitrogen Content, N/VSS (%)	0.09
Phosphorus Content, P/VSS (%)	0.03
TSS Content of Poly-P	3.23

Diurnal Peak Flow Conditions

This document is the property of CH2M HILL, Inc.
The expression of the information contained in this
document is protected under U.S. copyright law.

Constituent	Influent	Effluent	
Flow (m3/day)	875	875	
Carbonaceous BOD_5 (kg/day)	7,326	2,288	
Particulate	2,552	1,398	
Heterotrophs	3,503	631	
PAOs	1,270	259	
PHA	1	0	
Filtrate	0	0	
COD (kg/day)	21,565	13,099	
Particulate Bio	482	0	
Particulate Non-Bio	7,550	7,396	
Decay Prod Aer/Anx	3,749	2,585	
Decay Prod Anaerobic	0	0	
Heterotrophs	5,822	1,167	
Autotrophs	413	270	
PAOs	3,508	1,641	
PHA	2	1	
Soluble Bio	0	0	
VFA	0	0	
Colloidal Bio	0	0	
Soluble Non-Bio	38	41	
Colloidal Non-Bio	0	0	
TSS (kg/day)	26,290	17,499	
Biodegradable	377	0	
Non-Biodegradable	11,019	11,482	
Decay Prod Aer/Anx	2,934	2,022	
Decay Prod Anaerobic	0	0	
Metal Hydroxide	0	0	
Metal Phosphate	0	0	
Heterotrophs	4,556	913	
Autotrophs	324	211	
PAOs	2,745	1,284	
PHA	1	0	
Poly-P	4,334	1,586	
VSS (kg/day)	15,160	9,196	
Biodegradable	339	0	
Non-Biodegradable	5,317	5,208	
Decay Prod Aer/Anx	2,640	1,820	
Decay Prod Anaerobic	0	0	
Metal Hydroxide	0	0	
Heterotrophs	4,100	821	
Autotrophs	291	190	
PAOs	2,471	1,155	
PHA	1	0	
TKN (kg-N/day)	1,112	877	
NH_3-N (kg-N/day)	1	121	
Particulate Bio Org N	29	0	
Non-Bio Part Org N	302	411	
Decay Prod Aer/Anx	187	157	
Decay Prod Anaerobic	302	0	
Heterotrophs	353	71	
Autotrophs	25	16	
PAOs	212	99	
Non-Bio Soluble Org. N	2	2	
Non-Bio Colloidal Org. N	0	0	
Soluble Bio Org N	0	0	
Colloidal Bio Org N	0	0	
NO_3-N (kg-N/day)	10	306	
TP (kg-P/day)	1,673	1,474	
Bio Particulate	10	0	
Non-Bio Particulate	48	92	
Decay Prod Aer/Anx	75	52	
Decay Prod Anaerobic	0	0	
Metal Phosphate	0	0	
Heterotrophs	116	23	
Autotrophs	8	5	
PAOs	70	33	
Poly-P	1,342	491	
Ortho-PO_4	4	778	
Alkalinity (kg/day as $CaCO_3$)	437	0	
H_2S (kg/day)	0	0	
BOD_5 (mg/L)	8,360	2,611	
COD (mg/L)	24,608	14,948	
TSS (mg/L)	30,000	19,968	
VSS (mg/L)	17,299	10,493	
TKN (mg-N/L)	1,269	1,001	
NH_3-N (mg-N/L)	1	138	
NO_3-N (mg-N/L)	11	349	
TP (mg-P/L)	1,910	1,682	
Alkalinity (mg/L as CaCO3)	499	0	
H_2S (mg/L)	0	0	

This document is the property of CH2M HILL, Inc.
The expression of the information contained in this
document is protected under U.S. copyright law.

Appendix F

Technical Memorandum

Modeling Results for All Alternatives

Model Results Summary for Alternatives 1 and 2 Conventional WWTP

Projected 2028 Average Daily Flow = 6,276 m^3/day

Projected 2028 Maximum Month Flow = 8,787 m^3/day

Estimated Equipment Sizing:

- 3 process reactors at 7,382 m^3 each
- 2 circular clarifiers at 18 m diameter each
- 6,359 m^3 total aerobic digester volume

Use Instructions: See Comment in this cell.

Linked Model Input	Current Run:	Comments	Scenarios: Max Month (winter)	Comments	Max Month (summer)	Comments	Average Day	Comments	For Class 1 Reliability	Comments
Flow (m3/day)	8,787	MM	8,787	MM	8,787	MM	6,276	AD Flow	6,590	75% of MM
Diurnal Flow Peaking Factor	1.43	MxD:MM	1.43	MxD:MM	1.43	MxD:MM	2	MxD:AD	1.43	Same as MxD:MM
CBOD5 (kg/day)	7,025	MM loading	7,025	MM loading	7,025	MM loading	5,018	AD Loading	5,269	75% of MM
TSS (kg/day)	7,903	MM loading	7,903	MM loading	7,903	MM loading	5,645	AD Loading	5,927	75% of MM
% VS	75%		75%		75%		75%		75%	
TKN (kg/day)	1,317	MM loading	1,317	MM loading	1,317	MM loading	941	AD Loading	988	75% of MM
Ammonia -N (kg/day)	790	MM loading	790	MM loading	790	MM loading	564	AD Loading	593	75% of MM
Total Phosphate - P (kg/day)	220	MM loading	220	MM loading	220	MM loading	157	AD Loading	165	75% of MM
Alkalinity (kg/day)	8781	Assumed at 1000 mg/L	8781	Assumed at 1000 mg/L	8781	Assumed at 1000 mg/L	6272	Assumed at 1000 mg/L	6586	Assumed at 1000 mg/L
Hydrogen Sulfide (kg/day)	211	Assumed at 24 mg/L	211	Assumed at 24 mg/L	211	Assumed at 24 mg/L	151	Assumed at 24 mg/L	158	Assumed at 24 mg/L
Number of Aeration Basin Trains Online	3		3		3		3		3	
Volume per Train (m3)	7382		7382		7382		7382		7382	
Total Aeration Basin Volume in Service (m3)	22145		22145		22145		22145		22145	
SRT	10		10		10		10		10	
System pH	7.2		7.2		7.2		7.2		7.2	
Temperature °C	14	Minimum Month	14	Minimum Month	24.6	Maximum month	16.8	Annual Average	14	Minimum Month
Nitrified Recycle Rate (% of Aer Basin Influent flow)	615%		615%		615%		615%		615%	
Number of Secondary Clarifiers Online	2		2		2		2		1	
Surface Area per Secondary Clarifier (sq m)	244		244		244		244		244	
Total Secondary Clarifier Area (sq m)	488		488		488		488		244	
Secondary Clarifier Diameter (m)	18		18		18		18		18	
SVI (mL/g)	150		150		150		150		150	
Average Secondary Effluent TSS (mg/L)	15	Fixed	15	Fixed	15	Fixed	15	Fixed	15	Fixed
Peak Secondary Effluent TSS (mg/L)	20	Fixed	20	Fixed	20	Fixed	20	Fixed	20	Fixed
Average RAS Underflow Rate (% of Inf Q)	45.8%	Calculated	45.8%	Calculated	45.8%	Calculated	44.1%	Calculated	44.4%	Calculated
Peak RAS Underflow Rate (% of Inf Q)	63.8%	Calculated	63.8%	Calculated	63.4%	Calculated	46.3%	Calculated	62.0%	Calculated
Thickener Solids Capture (%)	85%		85%		85%		85%		85%	
Thickened Sludge Concentration (mg/L)	30,000		30,000		30,000		30,000		30,000	
AerDig1 Volume (m3)	6,359		6,359		6,359		6,359		6,359	
AerDig1 Temperature (°C)	14	Minimum Month	14	Minimum Month	24.6	Maximum month	16.8	Annual Average	14	Minimum Month
AerDig1 DO (mg/L)	2		2		2		2		2	
AerDig1 % Denitrification	20%		20%		20%		20%		20%	
Dewatering Solids Capture (%)	95%		95%		95%		95%		95%	
Dewatered Sludge Concentration (%)	20%		20%		20%		20%		20%	
Results										
SRT	10.0		10.0		10.0		10.0		10.0	
Final Anoxic Zone NO3	0.12	want < 0.5	0.12	want < 0.5	0.05	want < 0.5	0.08	want < 0.5	0.11	want < 0.5
Secondary Effluent TSS (mg/L)	15.0	want < 60 (goal = 42)	15.0	want < 60 (goal = 42)	15.0	want < 60 (goal = 42)	15.0	want < 60 (goal = 42)	15.0	want < 60 (goal = 42)
Secondary Effluent CBOD5 (mg/L)	4.70	want < 60 (goal = 42)	4.69	want < 60 (goal = 42)	4.15	want < 60 (goal = 42)	4.45	want < 60 (goal = 42)	4.61	want < 60 (goal = 42)
Secondary Effluent COD (mg/L)	60.3	want < 150, (goal = 105.0)	60.3	want < 150, (goal = 105.0)	59.8	want < 150, (goal = 105.0)	60.0	want < 150, (goal = 105.0)	60.1	want < 150, (goal = 105.0)
Secondary Effluent TN (mg/L)	16.2	want < 70, (goal = 49.0)	16.2	want < 70, (goal = 49.0)	16.1	want < 70, (goal = 49.0)	15.8	want < 70, (goal = 49.0)	15.9	want < 70, (goal = 49.0)
Secondary Effluent NH3-N (mg/L)	0.15		0.15		0.08		0.09		0.15	
Secondary Effluent NO3-N (mg/L)	12.552	want < 18 (goal is 12.6)	12.553	want < 18 (goal is 12.6)	12.580	want < 18 (goal is 12.6)	12.167	want < 18 (goal is 12.6)	12.225	want < 18 (goal is 12.6)
Secondary Effluent TP (mg/L)	5.16	want < 15 (goal = 10.5)	5.18	want < 15 (goal = 10.5)	1.91	want < 15 (goal = 10.5)	5.38	want < 15 (goal = 10.5)	6.43	want < 15 (goal = 10.5)
Influent COD (mg/L)	1,568	~1320 mg/L per ops data	1,568	~1320 mg/L per ops data	1,568	~1320 mg/L per ops data	1,568	~1320 mg/L per ops data	1,568	~1320 mg/L per ops data
Corresponding Average MLSS (mg/L)	3,342	want < 3400 at MM	3,343	want < 3400 at MM	3,302	want < 3400 at MM	2,420	want < 3400 at MM	2,530	want < 3400 at MM
Secondary Influent MLSS (mg/L)	3,324		3,324		3,281		2,403		2,512	
Nitrified Recycle Rate (m3/day)	58,944		58,941		58,945		43,773		45,655	
Solids Loading Rate To Secondary Clarifiers (kg/day-sq m)	95.28		95.27		94.05		50.51		110.44	
RAS Rate (m3/day)	4,396.24		4,392.82		4,392.81		3,132.60		3,294.96	
Corresponding WAS (kg/day)	7,270.23		7,271.56		7,181.65		5,265.28		5,503.63	
Combined Thickened Feed Sludge to Aerobic Dig. (kg/day)	6,180		6,181		6,104		4,475		4,678	
Digester Volatile Solids Loading Rate (kg/day-m3)	0.56		0.56		0.52		0.39		0.42	
Digester SRT	30.87		30.86		31.25		42.62		40.78	
Model Prediction of VS Destruction (combined)	39.63%		39.62%		37.44%		41.43%		41.66%	
Digester Alkalinity Limited?	yes		yes		yes		yes		yes	
SOUR in Digester (mg O2/hour/gram TS)	0.65	want < 1.5 at 20 C, goal = 1.13	0.65	want < 1.5 at 20 C, goal = 1.13	0.57	want < 1.5 at 20 C, goal = 1.13	0.50	want < 1.5 at 20 C, goal = 1.13	0.54	want < 1.5 at 20 C, goal = 1.13
Dewatered Solids from Plant (kg/day)	3,900		3,901		3,900		2,697		2,839	
PBNR AOR (kg/day)	10,754		10,754		11,130		7,752		8,049	
PBNR SOR (kg/day)	31,465		31,466		37,337		21,329		21,653	
PBNR Total Required Air Rate in Zones 3-5 (N*m3/hr)	15,103		15,103		18,311		10,996		10,910	

This document is the property of CH2M HILL, Inc.
The expression of the information contained in this
document is protected under U.S. copyright law.

Stoichiometric Parameters		Value	Default	Units
Hydrolysis of Particulate Substrate: X_S				
Production of Soluble Inert COD: S_I	f_{SI}	0.00		g COD/g COD
Heterotrophic Organisms: X_H				
Yield	Y_H	0.6660		g COD/g COD
Fraction of Lysis Inerts	f_{XI}	0.08		g COD/g COD
Phosphorus Accumulating Organisms: X_{PAO}				
Yield (biomass/PHA)	Y_{PAO}	0.6250		g COD/g COD
Phosphate release per PHA Store	Y_{PO4}	0.40		g P/g COD
PHA requirement for PP storage	Y_{PHA}	0.20		g COD/g P
Fraction of Lysis Inerts	f_{XI}	0.08		g COD/g COD
Autotrophic Organisms: X_{AUT}				
Yield per NO_3-N	Y_A	0.19		g COD/g N
Fraction of Lysis Inerts	f_{XI}	0.08		g COD/g COD
Methanol Degraders-Population 1: X_{M1}				
Yield per MeOH COD	Y_{M1}	0.58		g COD/g COD
Fraction of Lysis Inerts	f_{XI}	0.10		g COD/g COD
Methanol Degraders-Population 2: X_{M2}				
Yield per MeOH COD	Y_{M2}	0.36		g COD/g COD
Fraction of Lysis Inerts	f_{XI}	0.10		g COD/g COD

Conversion Factors for Conservation Equatior		Value	Default	Units
Nitrogen Content of:	Check Delta	0.00		
Soluble Inert COD: S_I	i_{NSI}	0.0600	0.01	g N/g COD
Fermentable Substrate: S_F	i_{NSF}	0.0392	0.03	g N/g COD
Inert Particulate COD: X_I	i_{NXI}	0.0400	0.02	g N/g COD
Slowly Biodegradable Substrate: X_S	i_{NXS}	0.0392	0.04	g N/g COD
Biomass: X_H, X_{PAO}, X_{AUT}, X_{m1}, X_{m2}	i_{NBM}	0.0606	0.07	g N/g COD
Decay Products:, $X_{d,aa}$	i_{NXdaa}	0.0606	0.02	g N/g COD
Phosphorus Content of:	Check Delta	0.00		
Soluble Inert COD: S_I	i_{PSI}	0.0000	0.00	g P/g COD
Fermentable Substrate: S_F	i_{PSF}	0.0000	0.01	g P/g COD
Inert Particulate COD: X_I	i_{PXI}	0.0073	0.01	g P/g COD
Slowly Biodegradable Substrate: X_S	i_{PXS}	0.0053	0.01	g P/g COD
Biomass: X_H, X_{PAO}, X_{AUT}	i_{PBM}	0.0200	0.02	g P/g COD
Decay Products:, $X_{d,aa}$	i_{PXdaa}	0.0200	1.02	g P/g COD
TSS to COD Ratio for:				
Inert Particulate COD: X_I	i_{TSSXI}	0.7825	0.75	g TSS/g COD
Slowly Biodegradable Substrate: X_S	i_{TSSXS}	0.7825	0.75	g TSS/g COD
Biomass: X_H, X_{PAO}, X_{AUT}, X_{m1}, X_{m2}	i_{TSSBM}	0.7825	0.90	g TSS/g COD
Decay Products: $X_{d,aa}$	$i_{TSSXdaa}$	0.7825	0.75	g TSS/g COD

Nitrogen Ratio Adjustment			Ratio
Fermentable Substrate: S_F	i_{NSF}	0.0392	
Slowly Biodegradable Substrate: X_S	i_{NXS}	0.0392	1.00
Alternate Nitrogen Ratic			
Fermentable Substrate: S_F	i_{NSF}	0.0535	
Slowly Biodegradable Substrate: X_S	i_{NXS}	0.0356	1.50

Kinetic Parameters		Unit	Typical Values 20 °C	10 °C	Temperature 14.0 deg. C
Hydrolysis of Particulate Substrate: X_S					
k_h	(Hydrolysis Rate)	1/day	3.00	2.00	2.35
n_{NO3}	(Anoxic Reduction Factor)		0.60	0.60	0.60
n_{fe}	(Anaerobic Reduction Factor)		0.40	0.40	0.40
K_{O2}	(Oxygen Inhibition)	g O_2/m^3	0.20	0.20	0.20
K_{NO3}	(Nitrate Inhibition)	g N/m^3	0.50	0.50	0.50
K_x	(Particulate Inhibition)	g COD/g COD	0.10	0.10	0.10
Hydrolysis of Decay Products: X_{daa}					
K_{hdaa}	(Hydrolysis Rate)	1/d	1.20		0.94
K_{O2Ydaa}	(Oxygen Inhibition)	g O_2/m^3	0.10		0.10
$K_{NO3Ydaa}$	(Nitrate Inhibition)	g N/m^3	0.10		0.10
K_{Xdaa}	(Particulate Inhibition)	g X_{daa}/g X_H	0.10		0.10
Heterotrophic Organisms: X_H					
μ_H	(Max Growth Rate)	1/day	6.00	3.00	2.60
q_{fe}	(Max Fermentation Rate)	g COD/(g COD*d)	3.00	1.50	1.98
n_{NO3}	(Anoxic Reduction Factor)		0.80	0.80	0.80
b_H	(Decay Rate)	1/day	0.40	0.20	0.50
K_{O2}	(Oxygen Inhibition)	g O_2/m^3	0.20	0.20	0.20
K_F	(Growth on S_F)	g COD/m^3	4.00	4.00	2.00
K_{fe}	(Fermentation of S_F)	g COD/m^3	4.00	4.00	4.00
K_A	(Growth on S_A)	g COD/m^3	4.00	4.00	2.00
K_{NO3}	(Anoxic Growth)	g N/m^3	0.50	0.50	0.50
K_{NH4}	(Nitrogen Inhibition)	g N/m^3	0.05	0.05	0.05
K_P	(Phosphorus Inhibition)	g P/m^3	0.01	0.01	0.01
K_{ALK}	(Alkalininty Inhibition)	mole HCO_3^-/m^3	0.10	0.10	0.10
Phosphorus Accumulating Organisms: X_{PAO}					
q_{PHA}	(X_{PHA} Storage Rate)	g X_{PHA}/(g X_{PAO}*d)	3.00	2.00	6.00
q_{PP}	(X_{PP} Storage Rate)	g X_{PP}/(g X_{PAO}*d)	1.50	1.00	1.18
μ_{PAO}	(Max Growth Rate)	1/day	1.00	0.67	0.79
n_{NO3}	(Anoxic Reduction Factor)		0.60	0.60	0.60
b_{PAO}	(X_{PAO} Decay Rate)	1/day	0.20	0.10	0.10
b_{PP}	(X_{PP} Decay Rate)	1/day	0.20	0.10	0.10
b_{PHA}	(X_{PHA} Decay Rate)	1/day	0.20	0.10	0.10
K_{O2}	(Oxygen Inhibition)	g O_2/m^3	0.20	0.20	0.20
K_{NO3}	(Anoxic Growth)	g N/m^3	0.50	0.50	0.50
K_A	(Growth on S_A)	g COD/m^3	4.00	4.00	2.00
K_{NH4}	(Nitrogen Inhibition)	g N/m^3	0.05	0.05	0.0050
K_{PS}	(Phosphorus Inhibition of PP)	g P/m^3	0.20	0.20	0.20
K_P	(Phosphorus Inhibition of Growth)	g P/m^3	0.01	0.01	0.0050
K_{ALK}	(Alkalininty Inhibition)	mole HCO_3^-/m^3	0.10	0.10	0.10
K_{PP}	(Polyphosphate Inhibition)	g X_{PP}/g X_{PAO}	0.01	0.01	0.02
K_{MAX}	(Max Ratio of X_{PP}/X_{PAO})	g X_{PP}/g X_{PAO}	0.34	0.34	0.34
K_{IPP}	(Inhibition of PP Storage)	g X_{PP}/g X_{PAO}	0.02	0.02	0.02
K_{PHA}	(Saturation for PHA)	g X_{PHA}/g X_{PAO}	0.01	0.01	0.01
Autotrophic Organisms: X_{AUT}					
μ_{AUT}	(Maximum Growth Rate)	1/day	1.00	0.35	0.42
b_{AUT}	(Decay Rate)	1/day	0.15	0.05	0.04
K_{O2}	(Oxygen Inhibition)	g O_2/m_3	0.50	0.50	0.50
K_{NH4}	(Nitrogen Inhibition: SUBSTRATE)	g N/m^3	1.00	1.00	0.49
K_{ALK}	(Alkalininty Inhibition)	mole HCO_3^-/m^3	0.50	0.50	0.01
K_P	(Phosphorus Inhibition of Growth)	g P/m^3	0.01	0.01	0.0050
Precipitation					
k_{PRE}	(Rate of Phosphorus Precipitation)	m^3/(g $Me(OH)_3$*d)	1.00	1.00	2.00
k_{RED}	(Rate of Phosphous Redissolution)	1/day	0.60	0.60	0.10
K_{ALK}	(Alkalininty Inhibition)	mole HCO_3^-/m^3	0.50	0.50	0.50
Methanol Degrading Organisms - Population 1					
μ_{M1}	(Maximum Growth Rate)	1/day	3.88		7.00
n_{NO3M1}	(Anoxic Reduction Factor)		0.21		0.20
b_{M1}	(Decay Rate)	1/day	0.18		0.20
K_{O2M1}	(Oxygen Inhibition)	g O_2/m^3	0.20		0.50
K_{M1}	(Growth on Methanol)	g COD/m^3	4.00		4.00
K_{NO3M1}	(Anoxic Growth)	g N/m^3	0.50	0.50	0.80
K_{NH4M1}	(Nitrogen Inhibition)	g N/m^3	0.05		0.05
K_{ALKM1}	(Alkalinity Inhibition)	mole HCO_3^-/m^3	0.10		0.10
K_{PM1}	(Phosphorus Inhibition)	g P/m^3	0.01		0.01
Methanol Degrading Organisms - Population 2					
μ_{M2}	(Maximum Growth Rate)	1/day	1.72		7.00
n_{NO3M2}	(Anoxic Reduction Factor)		0.76		0.80
b_{M2}	(Decay Rate)	1/day	0.25		0.25
K_{O2M2}	(Oxygen Inhibition)	g O_2/m^3	0.20		0.50
K_{M2}	(Growth on Methanol)	g COD/m^3	4.00		1.00
K_{NO3M2}	(Anoxic Growth)	g N/m^3	0.50	0.50	0.50
K_{NH4M2}	(Nitrogen Inhibition)	g N/m^3	0.05		0.05
K_{ALKM2}	(Alkalinity Inhibition)	mole HCO_3^-/m^3	0.10		0.10
K_{PM2}	(Phosphorus Inhibition)	g P/m^3	0.01		0.01

This document is the property of CH2M HILL, Inc.
The expression of the information contained in thi
document is protected under U.S. copyright law.

Mass Balance for Average Flow Conditions

Constituent	Raw Wastewater (RW)	Main Recycle Influent (RecyI)	Main Recycled Stream (Recycle)	Main Combined Recycle Effluent (RecyE)	Main Bioreactor Influent (BI)	Main Secondary Clarifier Influent (SI)	Main Secondary Clarifier Effluent (SE)	Plant Effluent (PLE)	Main WAS	GBT WAS Thickener Influent (TWASI)	GBT Thickened WAS (TWAS)	AerDig1 Aerobic Digester Influent (ADI)	AerDig1 Aerobic Digester Effluent (ADE)	BFP Dewatering Influent (DWI)	BFP Dewatered Sludge (DWE)	Biosolids to Dispoal	GBT WAS Thickening Recycle (TWASR)	BFP Dewatering Recycle (DWR)	Recy Combined Discharge	Ender
Flow (m3/day)	8,787	8,787	799	9,586	9,586	13,982	8,767	8,767	818	818	206	206	206	206	19	19	612	186	799	
Carbonaceous BOD_5 (kg/day)	7,025	7,025	329	7,354	7,354	12,862	41	41	2,012	2,012	1,710	1,710	533	533	507	507	302	27	329	
COD (kg/day)	13,781	13,781	1,085	14,866	14,866	38,778	528	528	6,001	6,001	5,077	5,077	3,069	3,069	2,907	2,907	924	162	1,085	
TSS (kg/day)	7,904	7,904	1,296	9,200	9,200	46,472	132	132	7,270	7,270	6,180	6,180	4,105	4,105	3,900	3,900	1,091	205	1,296	
VSS (kg/day)	5,928	5,928	737	6,665	6,665	26,836	76	76	4,198	4,198	3,569	3,569	2,154	2,154	2,047	2,047	630	108	737	
TKN (kg-N/day)	1,317	1,317	84	1,402	1,402	2,062	32	32	318	318	269	269	206	206	171	171	49	35	84	
NH_3-N (kg-N/day)	790	790	26	816	816	2	1	1	0	0	0	0	28	28	3	3	0	26	26	
NO_3-N (kg-N/day)	0	0	73	73	73	176	110	110	10	10	3	3	72	72	7	7	8	65	73	
TP (kg-P/day)	220	220	241	461	461	2,697	45	45	416	416	352	352	352	352	175	175	65	177	241	
Alkalinity (kg/day as $CaCO_3$)	8,781	8,781	437	9,218	9,218	9,985	6,261	6,261	584	584	147	147	0	0	0	0	437	0	437	
H_2S (kg/day)	211	211	0	211	211	0	0	0	0	0	0	0	0	0	0	0	0	0	0	
BOD_5 (mg/L)	800	800	412	767	767	920	5	5	2,459	2,459	8,299	8,299	2,589	2,589	25,980	25,980	493	143	412	
COD (mg/L)	1,568	1,568	1,359	1,551	1,551	2,773	60	60	7,335	7,335	24,648	24,648	14,898	14,898	149,087	149,087	1,509	867	1,359	
TSS (mg/L)	899	899	1,622	960	960	3,324	15	15	8,886	8,886	30,000	30,000	19,929	19,929	200,000	200,000	1,781	1,101	1,622	
VSS (mg/L)	675	675	923	695	695	1,919	9	9	5,131	5,131	17,324	17,324	10,459	10,459	104,957	104,957	1,029	578	923	
TKN (mg-N/L)	150	150	106	146	146	147	4	4	389	389	1,307	1,307	998	998	8,750	8,750	80	188	106	
NH_3-N (mg-N/L)	90	90	32	85	85	0	0	0	0	0	0	0	138	138	138	138	0	138	32	
NO_3-N (mg-N/L)	0	0	91	8	8	13	13	13	13	13	13	13	349	349	349	349	13	349	91	
TP (mg-P/L)	25	25	302	48	48	193	5	5	509	509	1,707	1,707	1,707	1,707	8,965	8,965	105	948	302	
Alkalinity (mg/L as CaCO3)	999	999	547	962	962	714	714	714	714	714	714	714	0	0	0	0	714	0	547	
H_2S (mg/L)	24	24	0	22	22	0	0	0	0	0	0	0	0	0	0	0	0	0	0	

Mass Balance for Diurnal Peak Flow Conditions

Constituent	Raw Wastewater (RW)	Main Recycle Influent (RecyI)	Main Recycled Stream (Recycle)	Main Combined Recycle Effluent (RecyE)	Main Bioreactor Influent (BI)	Main Secondary Clarifier Influent (SI)	Main Secondary Clarifier Effluent (SE)		Main WAS	GBT WAS Thickener Influent (TWASI)	GBT Thickened WAS (TWAS)	AerDig1 Aerobic Digester Influent (ADI)	AerDig1 Aerobic Digester Effluent (ADE)	BFP Dewatering Influent (DWI)	BFP Dewatered Sludge (DWE)		GBT WAS Thickening Recycle (TWASR)	BFP Dewatering Recycle (DWR)	Recy Combined Discharge	
Flow (m3/day)	12,565	12,565	1,216	13,781	13,781	22,568	12,536	12,536	1,245	1,245	303	303	303	303	29	29	942	274	1,216	
Carbonaceous BOD_5 (kg/day)	9,133	9,133	485	9,617	9,617	15,662	48	48	1,938	1,938	2,523	2,523	784	784	745	745	445	39	485	
COD (kg/day)	17,914	17,914	1,589	19,503	19,503	71,541	748	748	8,787	8,787	7,436	7,436	4,512	4,512	4,274	4,274	1,351	238	1,589	
TSS (kg/day)	10,274	10,274	1,905	12,179	12,179	86,372	251	251	10,689	10,689	9,086	9,086	6,036	6,036	5,734	5,734	1,603	302	1,905	
VSS (kg/day)	7,705	7,705	1,081	8,786	8,786	49,692	144	144	6,150	6,150	5,227	5,227	3,167	3,167	3,009	3,009	922	158	1,081	
TKN (kg/day)	1,712	1,712	141	1,853	1,853	3,717	56	56	454	454	383	383	302	302	251	251	71	52	141	
NH_3-N (kg-N/day)	1,027	1,027	39	1,066	1,066	24	14	14	1	1	0	0	42	42	4	4	1	38	39	
NO_3-N (kg-N/day)	0	0	106	106	106	254	141	141	14	14	3	3	106	106	10	10	11	96	106	
TP (kg-P/day)	285	285	367	652	652	5,633	70	70	690	690	584	584	517	517	257	257	107	260	367	
Alkalinity (kg/day as $CaCO_3$)	11,415	11,415	470	11,885	11,885	11,261	6,256	6,256	621	621	151	151	0	0	0	0	470	0	470	
H_2S (kg/day)	274	274	0	274	274	0	0	0	0	0	0	0	0	0	0	0	0	0	0	
BOD_5 (mg/L)	727	727	398	698	698	694	4	4	1,556	1,556	8,329	8,329	2,589	2,589	25,980	25,980	473	143	398	
COD (mg/L)	1,426	1,426	1,306	1,415	1,415	3,170	60	60	7,057	7,057	24,553	24,553	14,898	14,898	149,087	149,087	1,433	867	1,306	
TSS (mg/L)	818	818	1,566	884	884	3,827	20	20	8,585	8,585	30,000	30,000	19,929	19,929	200,000	200,000	1,702	1,101	1,566	
VSS (mg/L)	613	613	889	638	638	2,202	12	12	4,939	4,939	17,260	17,260	10,459	10,459	104,957	104,957	979	578	889	
TKN (mg-N/L)	136	136	116	134	134	165	4	4	365	365	1,266	1,266	998	998	8,750	8,750	75	188	116	
NH_3-N (mg-N/L)	82	82	32	77	77	1	1	1	1	1	1	1	138	138	138	138	1	138	32	
NO_3-N (mg-N/L)	0	0	87	8	8	11	11	11	11	11	11	11	349	349	349	349	11	349	87	
TP (mg-P/L)	0	23	301	47	47	250	6	6	555	555	1,927	1,927	1,707	1,707	8,965	8,965	113	948	301	
Alkalinity (mg/L as CaCO3)	908	908	387	862	862	499	499	499	499	499	499	499	0	0	0	0	499	0	387	
H_2S (mg/L)	22	22	0	20	20	0	0	0	0	0	0	0	0	0	0	0	0	0	0	

This document is the property of CH2M HILL, Inc.
The expression of the information contained in this
document is protected under U.S. copyright law.

AerDig1

Aerobic Digester Module

Average Conditions

Constituent	Influent	Effluent	
Flow (m3/day)	206	206	
Carbonaceous BOD_5 (kg/day	1,710	533	
Particulate	170	325	
Heterotrophs	1,209	146	
PAOs	330	62	
PHA	0	0	
Filtrate	0	0	
COD (kg/day)	5,077	3,069	
Particulate Bio	126	0	
Particulate Non-Bio	1,733	1,733	
Decay Prod Aer/An	154	601	
Decay Prod Anaerobic	0	0	
Heterotrophs	2,009	271	
Autotrophs	133	63	
PAOs	913	392	
PHA	0	0	
Soluble Bio	0	0	
VFA	0	0	
Colloidal Bio	0	0	
Soluble Non-Bio	10	10	
Colloidal Non-Bio	0	0	
TSS (kg/day)	6,180	4,105	
Biodegradable	98	0	
Non-Biodegradable	2,688	2,688	
Decay Prod Aer/Anx	121	470	
Decay Prod Anaerobic	0	0	
Metal Hydroxide	0	0	
Metal Phosphate	0	0	
Heterotrophs	1,572	212	
Autotrophs	104	49	
PAOs	714	307	
PHA	0	0	
Poly-P	882	379	
VSS (kg/day)	3,569	2,154	
Biodegradable	88	0	
Non-Biodegradable	1,220	1,220	
Decay Prod Aer/Anx	109	423	
Decay Prod Anaerobic	0	0	
Metal Hydroxide	0	0	
Heterotrophs	1,415	191	
Autotrophs	94	44	
PAOs	643	276	
PHA	0	0	
TKN (kg-N/day)	269	206	
NH_3-N (kg-N/day)	0	28	
Particulate Bio Org N	5	0	
Non-Bio Part Org N	69	96	
Decay Prod Aer/Anx	9	36	
Decay Prod Anaerobic	0	0	
Heterotrophs	122	16	
Autotrophs	8	4	
PAOs	55	24	
Non-Bio Soluble Org. N	1	1	
Non-Bio Colloidal Org. N	0	0	
Soluble Bio Org N	0	0	
Colloidal Bio Org N	0	0	
NO_3-N (kg-N/day)	3	72	
TP (kg-P/day)	352	352	
Bio Particulate	1	0	
Non-Bio Particulate	13	22	
Decay Prod Aer/Anx	3	12	
Decay Prod Anaerobic	0	0	
Metal Phosphate	0	0	
Heterotrophs	40	5	
Autotrophs	3	1	
PAOs	18	8	
Poly-P	273	117	
Ortho-PO_4	1	186	
Alkalinity (kg/day as $CaCO_3$)	147	0	
H_2S (kg/day)	0	0	
BOD_5 (mg/L)	8,299	2,589	
COD (mg/L)	24,648	14,898	
TSS (mg/L)	30,000	19,929	
VSS (mg/L)	17,324	10,459	
TKN (mg-N/L)	1,307	998	
NH_3-N (mg-N/L)	0	138	
NO_3-N (mg-N/L)	13	349	
TP (mg-P/L)	1,707	1,707	
Alkalinity (mg/L as CaCO3)	714	0	
H_2S (mg/L)	0	0	

Constituent	Influent	Effluent
Flow (m3/day)	206	206
Carbonaceous BOD_5 (kg/day)	1,710	533
Particulate	170	325
Heterotrophs	1,209	146
PAOs	330	62
PHA	0	0
Filtrate	0	0
COD (kg/day)	5,077	3,069
Particulate Bio	126	0
Particulate Non-Bio	1,733	1,733
Decay Prod Aer/An	154	601
Decay Prod Anaerobic	0	0
Heterotrophs	2,009	271
Autotrophs	133	63
PAOs	913	392
PHA	0	0
Soluble Bio	0	0
VFA	0	0
Colloidal Bio	0	0
Soluble Non-Bio	10	10
Colloidal Non-Bio	0	0
TSS (kg/day)	6,180	4,105
Biodegradable	98	0
Non-Biodegradable	2,688	2,688
Decay Prod Aer/Anx	121	470
Decay Prod Anaerobic	0	0
Metal Hydroxide	0	0
Metal Phosphate	0	0
Heterotrophs	1,572	212
Autotrophs	104	49
PAOs	714	307
PHA	0	0
Poly-P	882	379
VSS (kg/day)	3,569	2,154
Biodegradable	88	0
Non-Biodegradable	1,220	1,220
Decay Prod Aer/Anx	109	423
Decay Prod Anaerobic	0	0
Metal Hydroxide	0	0
Heterotrophs	1,415	191
Autotrophs	94	44
PAOs	643	276
PHA	0	0
TKN (kg-N/day)	269	206
NH_3-N (kg-N/day)	0	28
Particulate Bio Org N	5	0
Non-Bio Part Org N	69	96
Decay Prod Aer/Anx	9	36
Decay Prod Anaerobic	0	0
Heterotrophs	122	16
Autotrophs	8	4
PAOs	55	24
Non-Bio Soluble Org. N	1	1
Non-Bio Colloidal Org. N	0	0
Soluble Bio Org N	0	0
Colloidal Bio Org N	0	0
NO_3-N (kg-N/day)	3	72
TP (kg-P/day)	352	352
Bio Particulate	1	0
Non-Bio Particulate	13	22
Decay Prod Aer/Anx	3	12
Decay Prod Anaerobic	0	0
Metal Phosphate	0	0
Heterotrophs	40	5
Autotrophs	3	1
PAOs	18	8
Poly-P	273	117
Ortho-PO_4	1	186
Alkalinity (kg/day as $CaCO_3$)	147	0
H_2S (kg/day)	0	0

This document is the property of CH2M HILL, Inc.
The expression of the information contained in th
document is protected under U.S. copyright law.

Facility Operating Parameters		
Bioreactor Volume, m3		6,358.80
Minimum Valid SRT, days		3.00
SRT, Days		30.87
Temperature, oC		14
Volatile Solids Loading (kg VSS/m3-day)		0.56
Volatile Solids Reduction, %		39.63%
TSS Reduction %		33.57%
SOUR mg-O2/(g-VSS x hour) at 20 oC		1.24
SOUR mg-O2/(g-TSS x hour) at 20 oC		0.65
SOUR mg-O2/(g-VSS x hour) with nitrification at 20 oC		1.74
SOUR mg-O2/(g-TSS x hour) with nitrification at 20 oC		0.91
Total AOR (kgO2/day)		2,358
% denitrification		20%
Nutrients		
Nitrogen Released Due to Digestion (transformed to NH3) (kg/day)		115.50
Nitrogen Nitrified (Kg/day)		87.15
Nitrogen Denitrified (Kg/day)		17.95
Alkalinity in Feed (Kg/day)		147
Alkalinity Released Due to Digestion (Kg/day)		416
Alkalinity Lost Through Nitrification (Kg/day)		628
Alkalinity Produced Through Denitrification (Kg/day)		65
Alkalinity Discharged (Kg/day		0
Kinetic Limitation on Nitrification		
DO, mg/L		2
Maximum Specific Growth Rate (mu_{Hmax}), Day^{-1} at Operational DO		0.3408
Ammonia in Digester Effluent Due to Kinetic Limitations		
	a	0.26
	b	-1,294.93
	c	21.29
Effluent Ammonia (mg-N/L) for Kinetic Limitation		0.02
Potential Nitrification Associated with Kinetics (Kg/day		115.53

Aerobic Biological Kinetics	
Parameter	**Temperature**
Heterotrophs	
Maximum Specific Growth Rate (mu_{Hmax}), Day^{-1}	2.60
Half Saturation for Organics (K_S), mg BOD_5/L	3.13
Half Saturation for Organics (K_S), mg Bio COD/L	5.00
True Yield (Y_H), mg COD/mg COD (aerobic)	0.67
Decay Rate (b_H), Day^{-1}	0.22
Inactive Fraction (f_D)	0.19
Volatile Fraction, % of TSS	0.90
COD/VSS Ratio, mg COD/mg VSS	1.42
Nitrogen Content, N/VSS (%)	0.09
Phosphorus Content, P/VSS (%	0.03
Autotrophs	
Maximum Specific Growth Rate (mu_{Hmax}), Day^{-1}	0.43
Half Saturation for NH_3-N (K_N), mg-N/L	0.49
Half Saturation for O_2 (K_O), mg-O_2/L	0.50
True Yield (Y_A), mg TSS/mg NH_3-N	0.15
True Yield (Y_A), mg COD/mg NH_3-N	0.19
Decay Rate (b_A), Day^{-1}	0.04
Volatile Fraction, % of TSS	0.90
COD/VSS Ratio, mg COD/mg VSS	1.42
Nitrogen Content, N/VSS (%)	0.09
Phosphorus Content, P/VSS (%	0.03
PAOs	
True Yield (Y_H), mg TSS/mg BOD_5	0.76
True Yield (Y_H), mg COD/mg COD	0.62
Decay Rate (b_H), Day^{-1}	0.04
Inactive Fraction (f_D)	0.19
Volatile Fraction, % of TSS	0.90
COD/VSS Ratio, mg COD/mg VSS	1.42
Nitrogen Content, N/VSS (%)	0.09
Phosphorus Content, P/VSS (%)	0.03
TSS Content of Poly-F	3.23

This document is the property of CH2M HILL, Inc.
The expression of the information contained in th
document is protected under U.S. copyright law.

Diurnal Peak Flow Conditions

Constituent	Influent	Effluent	
Flow (m3/day)	303	303	
Carbonaceous BOD_5 (kg/day	2,523	784	
Particulate	876	478	
Heterotrophs	1,203	215	
PAOs	444	91	
PHA	0	0	
Filtrate	0	0	
COD (kg/day)	7,436	4,512	
Particulate Bio	162	0	
Particulate Non-Bio	2,602	2,547	
Decay Prod Aer/Anx	1,289	883	
Decay Prod Anaerobic	0	0	
Heterotrophs	1,999	398	
Autotrophs	142	93	
PAOs	1,227	576	
PHA	1	0	
Soluble Bio	0	0	
VFA	0	0	
Colloidal Bio	0	0	
Soluble Non-Bio	13	14	
Colloidal Non-Bio	0	0	
TSS (kg/day)	9,086	6,036	
Biodegradable	127	0	
Non-Biodegradable	3,798	3,952	
Decay Prod Aer/Anx	1,009	691	
Decay Prod Anaerobic	0	0	
Metal Hydroxide	0	0	
Metal Phosphate	0	0	
Heterotrophs	1,564	312	
Autotrophs	111	73	
PAOs	960	451	
PHA	0	0	
Poly-P	1,516	557	
VSS (kg/day)	5,227	3,167	
Biodegradable	114	0	
Non-Biodegradable	1,832	1,794	
Decay Prod Aer/Anx	908	622	
Decay Prod Anaerobic	0	0	
Metal Hydroxide	0	0	
Heterotrophs	1,408	280	
Autotrophs	100	65	
PAOs	864	406	
PHA	0	0	
TKN (kg-N/day)	383	302	
NH_3-N (kg-N/day)	0	42	
Particulate Bio Org N	10	0	
Non-Bio Part Org N	104	142	
Decay Prod Aer/Anx	64	53	
Decay Prod Anaerobic	104	0	
Heterotrophs	121	24	
Autotrophs	9	6	
PAOs	74	35	
Non-Bio Soluble Org. N	1	1	
Non-Bio Colloidal Org. N	0	0	
Soluble Bio Org N	0	0	
Colloidal Bio Org N	0	0	
NO_3-N (kg-N/day)	3	106	
TP (kg-P/day)	584	517	
Bio Particulate	3	0	
Non-Bio Particulate	17	32	
Decay Prod Aer/Anx	26	18	
Decay Prod Anaerobic	0	0	
Metal Phosphate	0	0	
Heterotrophs	40	8	
Autotrophs	3	2	
PAOs	25	12	
Poly-P	469	173	
Ortho-PO_4	1	274	
Alkalinity (kg/day as $CaCO_3$)	151	0	
H_2S (kg/day)	0	0	
BOD_5 (mg/L)	8,329	2,589	
COD (mg/L)	24,553	14,898	
TSS (mg/L)	30,000	19,929	
VSS (mg/L)	17,260	10,459	
TKN (mg-N/L)	1,266	998	
NH_3-N (mg-N/L)	1	138	
NO_3-N (mg-N/L)	11	349	
TP (mg-P/L)	1,927	1,707	
Alkalinity (mg/L as CaCO3)	499	0	
H_2S (mg/L)	0	0	

This document is the property of CH2M HILL, Inc.
The expression of the information contained in thi
document is protected under U.S. copyright law.

Use Instructions: See Comment in this cell.

Linked Model Input	Current Run:	Comments	Scenarios: Max Month (winter)	Comments	Max Month (summer)	Comments	Average Day	Comments	For Class 1 Reliability	Comments
Flow (m3/day)	5,294	MM	5,294	MM	5,294		3,782	AD Flow	3,971	75% of MM
Diurnal Flow Peaking Factor	1.43	MxD:MM	1.43	MxD:MM	1.43	MxD:MM	2	MxD:AD	1.43	MxD:MM
CBOD5 (kg/day)	4,232	MM loading	4,232	MM loading	4,232		3,023	AD Loading	3,174	75% of MM
TSS (kg/day)	4,762	MM loading	4,762	MM loading	4,762		3,401	AD Loading	3,571	75% of MM
% VS	75%		75%		75%		75%		75%	
TKN (kg/day)	794	MM loading	794	MM loading	794		567	AD Loading	595	75% of MM
Ammonia -N (kg/day)	476	MM loading	476	MM loading	476		340	AD Loading	357	75% of MM
Total Phosphate - P (kg/day)	132	MM loading	132	MM loading	132		94	AD Loading	99	75% of MM
Alkalinity (kg/day)	5291	Assumed at 1000 mg/L	5291	Assumed at 1000 mg/L	5291		3779	Assumed at 1000 mg/L	3968	Assumed at 1000 mg/L
Hydrogen Sulfide (kg/day)	127	Assumed at 24 mg/L	127	Assumed at 24 mg/L	127		91	Assumed at 24 mg/L	95	Assumed at 24 mg/L
Number of Aeration Basin Trains Online	3		3		3		3		3	
Volume per Train (m3)	4467		4467		4467		4467		4467	
Total Aeration Basin Volume in Service (m3)	13400		13400		13400		13400		13400	
SRT	10		10		10		10		10	
System pH	7.2		7.2		7.2		7.2		7.2	
Temperature °C	14	Minimum Month	14	Minimum Month	24.6	Maximum month	16.8	Annual average	14	Minimum Month
Nitrified Recycle Rate (% of Aer Basin influent flow)	615%		615%		615%		615%		615%	
Number of Secondary Clarifiers Online	2		2		2		2		1	
Surface Area per Secondary Clarifier (sq m)	146		146		146		146		146	
Total Secondary Clarifier Area (sq m)	293		293		293		293		146	
Secondary Clarifier Diameter (m)	14		14		14		14		14	
SVI (mL/g)	150		150		150		150		150	
Average Secondary Effluent TSS (mg/L)	15	Fixed	15	Fixed	15	Fixed	15	Fixed	15	Fixed
Peak Secondary Effluent TSS (mg/L)	20	Fixed	20	Fixed	20	Fixed	20	Fixed	20	Fixed
Average RAS Underflow Rate (% of Inf Q)	45.8%	Calculated	45.8%	Calculated	45.8%	Calculated	44.1%	Calculated	44.4%	Calculated
Peak RAS Underflow Rate (% of Inf Q)	63.7%	Calculated	63.7%	Calculated	63.4%	Calculated	46.3%	Calculated	62.0%	Calculated
Thickener Solids Capture (%)	85%		85%		85%		85%		85%	
Thickened Sludge Concentration (mg/L)	30,000		30,000		30,000		30,000		30,000	
AerDig1 Volume (m3)	3,830		3,830		3,830		3,830		3,830	
AerDig1 Temperature (°C)	14	Minimum Month	14	Minimum Month	24.6	Maximum month	16.8	Annual average	14	Minimum Month
AerDig1 DO (mg/L)	2		2		2		2		2	
AerDig1 % Denitrification	20%		20%		20%		20%		20%	
Dewatering Solids Capture (%)	95%		95%		95%		95%		95%	
Dewatered Sludge Concentration (%)	20%		20%		20%		20%		20%	
Results										
SRT	10.0		10.0		10.0		10.0		10.0	
Final Anoxic Zone NO3	0.12	want < 0.5	0.12	want < 0.5	0.05	want < 0.5	0.08	want < 0.5	0.11	want < 0.5
Secondary Effluent TSS (mg/L)	15.0	want < 60 (goal = 42)	15.0	want < 60 (goal = 42)	15.0	want < 60 (goal = 42)	15.0	want < 60 (goal = 42)	15.0	want < 60 (goal = 42)
Secondary Effluent CBOD5 (mg/L)	4.69	want < 60 (goal = 42)	4.69	want < 60 (goal = 42)	4.14	want < 60 (goal = 42)	4.45	want < 60 (goal = 42)	4.61	want < 60 (goal = 42)
Secondary Effluent COD (mg/L)	60.3	want < 150, (goal = 105.0)	60.3	want < 150, (goal = 105.0)	59.8	want < 150, (goal = 105.0)	60.0	want < 150, (goal = 105.0)	60.1	want < 150, (goal = 105.0)
Secondary Effluent TN (mg/L)	16.2	want < 70, (goal = 49.0)	16.2	want < 70, (goal = 49.0)	16.1	want < 70, (goal = 49.0)	15.8	want < 70, (goal = 49.0)	15.9	want < 70, (goal = 49.0)
Secondary Effluent NH3-N (mg/L)	0.15		0.15		0.08		0.09		0.15	
Secondary Effluent NO3-N (mg/L)	12.6	want < 18 (goal is 12.6)	12.6	want < 18 (goal is 12.6)	12.6	want < 18 (goal is 12.6)	12.2	want < 18 (goal is 12.6)	12.2	want < 18 (goal is 12.6)
Secondary Effluent TP (mg/L)	5.19	want < 15 (goal = 10.5)	5.36	want < 15 (goal = 10.5)	1.91	want < 15 (goal = 10.5)	5.34	want < 15 (goal = 10.5)	6.45	want < 15 (goal = 10.5)
Influent COD (mg/L)	1,568	~1320 mg/L per ops data	1,568	~1320 mg/L per ops data	1,568	~1320 mg/L per ops data	1,568	~1320 mg/L per ops data	1,568	~1320 mg/L per ops data
Corresponding Average MLSS (mg/L)	3,329	want < 3400 at MM	3,330	want < 3400 at MM	3,289	want < 3400 at MM	2,410	want < 3400 at MM	2,519	want < 3400 at MM
Secondary Influent MLSS (mg/L)	3,310		3,311		3,268		2,393		2,502	
Nitrified Recycle Rate (m3/day)	35,531		35,529		35,531		26,390		27,524	
Solids Loading Rate To Secondary Clarifiers (kg/day-sq m)	95.30		95.32		94.09		50.53		110.49	
RAS Rate (m3/day)	2,647		2,647		2,647		1,887		1,985	
Corresponding WAS (kg/day)	4,382		4,382		4,329		3,173		3,317	
Combined Thickened Feed Sludge to Aerobic Dig. (kg/day)	3,724		3,725		3,679		2,697		2,819	
Digester Volatile Solids Loading Rate (kg/day-m3)	0.56		0.56		0.52		0.39		0.42	
Digester SRT	30.85		30.85		31.23		42.61		40.76	
Model Prediction of VS Destruction (combined)	39.62%		39.62%		37.43%		41.43%		41.66%	
Digester Alkalinity Limited?	yes		yes		yes		yes		yes	
SOUR in Digester (mg O2/hour/gram TS)	0.65	want < 1.5 at 20 C, goal = 1.13	0.65	want < 1.5 at 20 C, goal = 1.13	0.57	want < 1.5 at 20 C, goal = 1.13	0.50	want < 1.5 at 20 C, goal = 1.13	0.54	want < 1.5 at 20 C, goal = 1.13
Dewatered Solids From Plant (kg/day)	2,351		2,351		2,351		1,625		1,711	
PBNR AOR (kg/day)	6,480		6,480		6,706		4,671		4,850	
PBNR SOR (kg/day)	18,933		18,932		22,456		12,839		13,034	
PBNR Total Required Air Rate in Zones 3-5 (N*m3/hr)	9,088		9,087		11,019		6,624		6,573	

This document is the property of CH2M HILL, Inc.
The expression of the information contained in this
document is protected under U.S. copyright law.

Stoichiometric Parameters		Value	Default	Units
Hydrolysis of Particulate Substrate: X_S				
Production of Soluble Inert COD: S_I	f_{SI}	0.00		g COD/g COD
Heterotrophic Organisms: X_H				
Yield	Y_H	0.6660		g COD/g COD
Fraction of Lysis Inerts	f_{XI}	0.08		g COD/g COD
Phosphorus Accumulating Organisms: X_{PAO}				
Yield (biomass/PHA)	Y_{PAO}	0.6250		g COD/g COD
Phosphate release per PHA Store	Y_{PO4}	0.40		g P/g COD
PHA requirement for PP storage	Y_{PHA}	0.20		g COD/g P
Fraction of Lysis Inerts	f_{XI}	0.08		g COD/g COD
Autotrophic Organisms: X_{AUT}				
Yield per NO_3-N	Y_A	0.19		g COD/g N
Fraction of Lysis Inerts	f_{XI}	0.08		g COD/g COD
Methanol Degraders-Population 1: X_{M1}				
Yield per MeOH COD	Y_{M1}	0.56		g COD/g COD
Fraction of Lysis Inerts	f_{XI}	0.10		g COD/g COD
Methanol Degraders-Population 2: X_{M2}				
Yield per MeOH COD	Y_{M2}	0.36		g COD/g COD
Fraction of Lysis Inerts	f_{XI}	0.10		g COD/g COD

Conversion Factors for Conservation Equatior		Value	Default	Units
Nitrogen Content of:	Check Delta	0.00		
Soluble Inert COD: S_I	i_{NSI}	0.0600	0.01	g N/g COD
Fermentable Substrate: S_F	i_{NSF}	0.0392	0.03	g N/g COD
Inert Particulate COD: X_I	i_{NXI}	0.0400	0.02	g N/g COD
Slowly Biodegradable Substrate: X_S	i_{NXS}	0.0392	0.04	g N/g COD
Biomass: X_H, X_{PAO}, X_{AUT}, X_{m1}, X_{m2}	i_{NBM}	0.0606	0.07	g N/g COD
Decay Products:, $X_{d,aa}$	i_{NXdaa}	0.0606	0.02	g N/g COD
Phosphorus Content of:	Check Delta	0.00		
Soluble Inert COD: S_I	i_{PSI}	0.0000	0.00	g P/g COD
Fermentable Substrate: S_F	i_{PSF}	0.0000	0.01	g P/g COD
Inert Particulate COD: X_I	i_{PXI}	0.0073	0.01	g P/g COD
Slowly Biodegradable Substrate: X_S	i_{PXS}	0.0053	0.01	g P/g COD
Biomass: X_H, X_{PAO}, X_{AUT}	i_{PBM}	0.0200	0.02	g P/g COD
Decay Products:, $X_{d,aa}$	i_{PXdaa}	0.0200	1.02	g P/g COD
TSS to COD Ratio for:				
Inert Particulate COD: X_I	i_{TSSXI}	0.7825	0.75	g TSS/g COD
Slowly Biodegradable Substrate: X_S	i_{TSSXS}	0.7825	0.75	g TSS/g COD
Biomass: X_H, X_{PAO}, X_{AUT}, X_{m1}, X_{m2}	i_{TSSBM}	0.7825	0.90	g TSS/g COD
Decay Products: $X_{d,aa}$	$i_{TSSXdaa}$	0.7825	0.75	g TSS/g COD

Nitrogen Ratio Adjustment			Ratio
Fermentable Substrate: S_F	i_{NSF}	0.0392	
Slowly Biodegradable Substrate: X_S	i_{NXS}	0.0392	1.00
Alternate Nitrogen Ratic			
Fermentable Substrate: S_F	i_{NSF}	0.0534	
Slowly Biodegradable Substrate: X_S	i_{NXS}	0.0356	1.50

Kinetic Parameters		Unit	Typical Values 20 °C	10 °C	Temperature 14.0 deg. C
Hydrolysis of Particulate Substrate: X_S					
k_h	(Hydrolysis Rate)	1/day	3.00	2.00	2.35
n_{NO3}	(Anoxic Reduction Factor)		0.60	0.60	0.60
n_{fe}	(Anaerobic Reduction Factor)		0.40	0.40	0.40
K_{O2}	(Oxygen Inhibition)	g O_2/m^3	0.20	0.20	0.20
K_{NO3}	(Nitrate Inhibition)	g N/m^3	0.50	0.50	0.50
K_x	(Particulate Inhibition)	g COD/g COD	0.10	0.10	0.10
Hydrolysis of Decay Products: X_{daa}					
K_{hdaa}	(Hydrolysis Rate)	1/d	1.20		0.94
K_{O2Ydaa}	(Oxygen Inhibition)	g O_2/m^3	0.10		0.10
$K_{NO3Ydaa}$	(Nitrate Inhibition)	g N/m^3	0.10		0.10
K_{Xdaa}	(Particulate Inhibition)	g X_{daa}/g X_H	0.10		0.10
Heterotrophic Organisms: X_H					
μ_H	(Max Growth Rate)	1/day	6.00	3.00	2.60
q_{fe}	(Max Fermentation Rate)	g COD/(g COD*d)	3.00	1.50	1.98
n_{NO3}	(Anoxic Reduction Factor)		0.80	0.80	0.80
b_H	(Decay Rate)	1/day	0.40	0.20	0.50
K_{O2}	(Oxygen Inhibition)	g O_2/m^3	0.20	0.20	0.20
K_F	(Growth on S_F)	g COD/m^3	4.00	4.00	2.00
K_{fe}	(Fermentation of S_F)	g COD/m^3	4.00	4.00	4.00
K_A	(Growth on S_A)	g COD/m^3	4.00	4.00	2.00
K_{NO3}	(Anoxic Growth)	g N/m^3	0.50	0.50	0.50
K_{NH4}	(Nitrogen Inhibition)	g N/m^3	0.05	0.05	0.05
K_P	(Phosphorus Inhibition)	g P/m^3	0.01	0.01	0.01
K_{ALK}	(Alkalininty Inhibition)	mole HCO_3^-/m^3	0.10	0.10	0.10
Phosphorus Accumulating Organisms: X_{PAO}					
q_{PHA}	(X_{PHA} Storage Rate)	g X_{PHA}/(g X_{PAO}*d)	3.00	2.00	6.00
q_{PP}	(X_{PP} Storage Rate)	g X_{PP}/(g X_{PAO}*d)	1.50	1.00	1.18
μ_{PAO}	(Max Growth Rate)	1/day	1.00	0.67	0.79
n_{NO3}	(Anoxic Reduction Factor)		0.60	0.60	0.60
b_{PAO}	(X_{PAO} Decay Rate)	1/day	0.20	0.10	0.10
b_{PP}	(X_{PP} Decay Rate)	1/day	0.20	0.10	0.10
b_{PHA}	(X_{PHA} Decay Rate)	1/day	0.20	0.10	0.10
K_{O2}	(Oxygen Inhibition)	g O_2/m^3	0.20	0.20	0.20
K_{NO3}	(Anoxic Growth)	g N/m^3	0.50	0.50	0.50
K_A	(Growth on S_A)	g COD/m^3	4.00	4.00	2.00
K_{NH4}	(Nitrogen Inhibition)	g N/m^3	0.05	0.05	0.0050
K_{PS}	(Phosphorus Inhibition of PP)	g P/m^3	0.20	0.20	0.20
K_P	(Phosphorus Inhibition of Growth)	g P/m^3	0.01	0.01	0.0050
K_{ALK}	(Alkalininty Inhibition)	mole HCO_3^-/m^3	0.10	0.10	0.10
K_{PP}	(Polyphosphate Inhibition)	g X_{PP}/g X_{PAO}	0.01	0.01	0.02
K_{MAX}	(Max Ratio of X_{PP}/X_{PAO})	g X_{PP}/g X_{PAO}	0.34	0.34	0.34
K_{IPP}	(Inhibition of PP Storage)	g X_{PP}/g X_{PAO}	0.02	0.02	0.02
K_{PHA}	(Saturation for PHA)	g X_{PHA}/g X_{PAO}	0.01	0.01	0.01
Autotrophic Organisms: X_{AUT}					
μ_{AUT}	(Maximum Growth Rate)	1/day	1.00	0.35	0.42
b_{AUT}	(Decay Rate)	1/day	0.15	0.05	0.04
K_{O2}	(Oxygen Inhibition)	g O_2/m_3	0.50	0.50	0.50
K_{NH4}	(Nitrogen Inhibition: SUBSTRATE)	g N/m^3	1.00	1.00	0.49
K_{ALK}	(Alkalininty Inhibition)	mole HCO_3^-/m^3	0.50	0.50	0.01
K_P	(Phosphorus Inhibition of Growth)	g P/m^3	0.01	0.01	0.0050
Precipitation					
k_{PRE}	(Rate of Phosphorus Precipitation)	m^3/(g $Me(OH)_3$*d)	1.00	1.00	2.00
k_{RED}	(Rate of Phosphous Redissolution)	1/day	0.60	0.60	0.10
K_{ALK}	(Alkalininty Inhibition)	mole HCO_3^-/m^3	0.50	0.50	0.50
Methanol Degrading Organisms - Population 1					
μ_{M1}	(Maximum Growth Rate)	1/day	3.88		7.00
n_{NO3M1}	(Anoxic Reduction Factor)		0.21		0.20
b_{M1}	(Decay Rate)	1/day	0.18		0.20
K_{O2M1}	(Oxygen Inhibition)	g O_2/m^3	0.20		0.50
K_{M1}	(Growth on Methanol)	g COD/m^3	4.00		4.00
K_{NO3M1}	(Anoxic Growth)	g N/m^3	0.50	0.50	0.80
K_{NH4M1}	(Nitrogen Inhibition)	g N/m^3	0.05		0.05
K_{ALKM1}	(Alkalinity Inhibition)	mole HCO_3^-/m^3	0.10		0.10
K_{PM1}	(Phosphorus Inhibition)	g P/m^3	0.01		0.01
Methanol Degrading Organisms - Population 2					
μ_{M2}	(Maximum Growth Rate)	1/day	1.72		7.00
n_{NO3M2}	(Anoxic Reduction Factor)		0.76		0.80
b_{M2}	(Decay Rate)	1/day	0.25		0.25
K_{O2M2}	(Oxygen Inhibition)	g O_2/m^3	0.20		0.50
K_{M2}	(Growth on Methanol)	g COD/m^3	4.00		1.00
K_{NO3M2}	(Anoxic Growth)	g N/m^3	0.50	0.50	0.50
K_{NH4M2}	(Nitrogen Inhibition)	g N/m^3	0.05		0.05
K_{ALKM2}	(Alkalinity Inhibition)	mole HCO_3^-/m^3	0.10		0.10
K_{PM2}	(Phosphorus Inhibition)	g P/m^3	0.01		0.01

This document is the property of CH2M HILL, Inc.
The expression of the information contained in thi
document is protected under U.S. copyright law.

Model Results Summary for Alternative 3, Plant 1 Conventional WWTP

Projected 2028 Average Daily Flow = 3,782 m^3/day

Projected 2028 Maximum Month Flow = 5,294 m^3/day

Estimated Equipment Sizing:

- 3 process reactors at 4,467 m^3 each
- 2 circular clarifiers at 14 m diameter each
- 3,830 m^3 total aerobic digester volume

Mass Balance for Average Flow Conditions

Constituent	Raw Wastewater (RW)	Main Recycle Influent (RecyI)	Main Recycled Stream (Recycle)	Main Combined Recycle Effluent (RecyE)	Main Bioreactor Influent (BI)	Main Secondary Clarifier Influent (SI)	Main Secondary Clarifier Effluent (SE)	Plant Effluent (PLE)	Main WAS	GBT WAS Thickener Influent (TWASI)	GBT Thickened WAS (TWAS)	AerDig1 Aerobic Digester Influent (ADI)	AerDig1 Aerobic Digester Effluent (ADE)	BFP Dewatering Influent (DWI)	BFP Dewatered Sludge (DWE)	Biosolids to Dispoal	GBT WAS Thickening Recycle (TWASR)	BFP Dewatering Recycle (DWR)	Recy Combined Discharge	Ender
Flow (m3/day)	5,294	5,294	483	5,778	5,778	8,425	5,283	5,283	495	495	124	124	124	124	12	12	371	112	483	
Carbonaceous BOD_5 (kg/day)	4,233	4,233	198	4,431	4,431	7,717	25	25	1,212	1,212	1,030	1,030	321	321	305	305	182	16	198	
COD (kg/day)	8,303	8,303	654	8,957	8,957	23,272	318	318	3,616	3,616	3,060	3,060	1,850	1,850	1,752	1,752	557	97	654	
TSS (kg/day)	4,763	4,763	781	5,543	5,543	27,889	79	79	4,382	4,382	3,724	3,724	2,474	2,474	2,351	2,351	657	124	781	
VSS (kg/day)	3,572	3,572	444	4,016	4,016	16,104	46	46	2,530	2,530	2,151	2,151	1,298	1,298	1,234	1,234	380	65	444	
TKN (kg-N/day)	794	794	51	845	845	1,237	19	19	192	192	162	162	124	124	103	103	30	21	51	
NH_3-N (kg-N/day)	476	476	16	492	492	1	1	1	0	0	0	0	17	17	2	2	0	15	16	
NO_3-N (kg-N/day)	0	0	44	44	44	106	66	66	6	6	2	2	43	43	4	4	5	39	44	
TP (kg-P/day)	132	132	145	278	278	1,620	27	27	251	251	212	212	212	212	105	105	39	107	145	
Alkalinity (kg/day as $CaCO_3$)	5,291	5,291	265	5,556	5,556	6,016	3,772	3,772	354	354	89	89	0	0	0	0	265	0	265	
H_2S (kg/day)	127	127	0	127	127	0	0	0	0	0	0	0	0	0	0	0	0	0	0	
BOD_5 (mg/L)	800	800	410	767	767	916	5	5	2,448	2,448	8,297	8,297	2,589	2,589	25,976	25,976	491	143	410	
COD (mg/L)	1,568	1,568	1,353	1,550	1,550	2,762	60	60	7,305	7,305	24,646	24,646	14,899	14,899	149,082	149,082	1,501	867	1,353	
TSS (mg/L)	900	900	1,616	959	959	3,310	15	15	8,850	8,850	30,000	30,000	19,931	19,931	200,000	200,000	1,772	1,101	1,616	
VSS (mg/L)	675	675	920	695	695	1,911	9	9	5,110	5,110	17,322	17,322	10,459	10,459	104,954	104,954	1,023	578	920	
TKN (mg-N/L)	150	150	105	146	146	147	4	4	388	388	1,307	1,307	998	998	8,749	8,749	80	188	105	
NH_3-N (mg-N/L)	90	90	32	85	85	0	0	0	0	0	0	0	138	138	138	138	0	138	32	
NO_3-N (mg-N/L)	0	0	91	8	8	13	13	13	13	13	13	13	348	348	348	348	13	348	91	
TP (mg-P/L)	25	25	301	48	48	192	5	5	507	507	1,707	1,707	1,707	1,707	8,969	8,969	105	948	301	
Alkalinity (mg/L as CaCO3)	999	999	548	962	962	714	714	714	714	714	714	714	0	0	0	0	714	0	548	
H_2S (mg/L)	24	24	0	22	22	0	0	0	0	0	0	0	0	0	0	0	0	0	0	

Mass Balance for Diurnal Peak Flow Conditions

Constituent	Raw Wastewater (RW)	Main Recycle Influent (RecyI)	Main Recycled Stream (Recycle)	Main Combined Recycle Effluent (RecyE)	Main Bioreactor Influent (BI)	Main Secondary Clarifier Influent (SI)	Main Secondary Clarifier Effluent (SE)		Main WAS	GBT WAS Thickener Influent (TWASI)	GBT Thickened WAS (TWAS)	AerDig1 Aerobic Digester Influent (ADI)	AerDig1 Aerobic Digester Effluent (ADE)	BFP Dewatering Influent (DWI)	BFP Dewatered Sludge (DWE)		GBT WAS Thickening Recycle (TWASR)	BFP Dewatering Recycle (DWR)	Recy Combined Discharge
Flow (m3/day)	7,571	7,571	736	8,307	8,307	13,601	7,554	7,554	753	753	182	182	182	182	17	17	571	165	736
Carbonaceous BOD_5 (kg/day)	5,503	5,503	292	5,795	5,795	9,405	29	29	1,168	1,168	1,520	1,520	472	472	449	449	268	24	292
COD (kg/day)	10,794	10,794	957	11,751	11,751	42,963	451	451	5,294	5,294	4,480	4,480	2,719	2,719	2,576	2,576	814	143	957
TSS (kg/day)	6,190	6,190	1,148	7,338	7,338	51,869	151	151	6,441	6,441	5,475	5,475	3,637	3,637	3,455	3,455	966	182	1,148
VSS (kg/day)	4,643	4,643	651	5,294	5,294	29,840	87	87	3,705	3,705	3,150	3,150	1,909	1,909	1,813	1,813	556	95	651
TKN (kg/day)	1,032	1,032	85	1,117	1,117	2,232	34	34	274	274	231	231	182	182	151	151	43	31	85
NH_3-N (kg-N/day)	619	619	23	643	643	15	8	8	1	1	0	0	25	25	2	2	1	23	23
NO_3-N (kg-N/day)	0	0	64	64	64	153	85	85	8	8	2	2	64	64	6	6	6	58	64
TP (kg-P/day)	172	172	221	393	393	3,384	42	42	416	416	352	352	312	312	155	155	64	157	221
Alkalinity (kg/day as $CaCO_3$)	6,878	6,878	285	7,163	7,163	6,786	3,769	3,769	376	376	91	91	0	0	0	0	285	0	285
H_2S (kg/day)	165	165	0	165	165	0	0	0	0	0	0	0	0	0	0	0	0	0	0
BOD_5 (mg/L)	727	727	397	698	698	692	4	4	1,550	1,550	8,329	8,329	2,589	2,589	25,976	25,976	470	143	397
COD (mg/L)	1,426	1,426	1,301	1,415	1,415	3,159	60	60	7,030	7,030	24,551	24,551	14,899	14,899	149,082	149,082	1,426	867	1,301
TSS (mg/L)	818	818	1,560	883	883	3,814	20	20	8,552	8,552	30,000	30,000	19,931	19,931	200,000	200,000	1,693	1,101	1,560
VSS (mg/L)	613	613	885	637	637	2,194	12	12	4,920	4,920	17,259	17,259	10,459	10,459	104,954	104,954	974	578	885
TKN (mg-N/L)	136	136	115	134	134	164	4	4	364	364	1,266	1,266	998	998	8,749	8,749	75	188	115
NH_3-N (mg-N/L)	82	82	32	77	77	1	1	1	1	1	1	1	138	138	138	138	1	138	32
NO_3-N (mg-N/L)	0	0	87	8	8	11	11	11	11	11	11	11	348	348	348	348	11	348	87
TP (mg-P/L)	0	23	300	47	47	249	6	6	553	553	1,927	1,927	1,707	1,707	8,969	8,969	113	948	300
Alkalinity (mg/L as CaCO3)	908	908	387	862	862	499	499	499	499	499	499	499	0	0	0	0	499	0	387
H_2S (mg/L)	22	22	0	20	20	0	0	0	0	0	0	0	0	0	0	0	0	0	0

This document is the property of CH2M HILL, Inc.
The expression of the information contained in this
document is protected under U.S. copyright law.

AerDig1

Aerobic Digester Module

Average Conditions

Constituent	Influent	Effluent
Flow (m3/day)	124	124
Carbonaceous BOD_5 (kg/day	1,030	321
Particulate	102	196
Heterotrophs	728	88
PAOs	199	37
PHA	0	0
Filtrate	0	0
COD (kg/day)	3,060	1,850
Particulate Bio	76	0
Particulate Non-Bio	1,044	1,044
Decay Prod Aer/Anx	93	362
Decay Prod Anaerobic	0	0
Heterotrophs	1,211	163
Autotrophs	80	38
PAOs	550	236
PHA	0	0
Soluble Bio	0	0
VFA	0	0
Colloidal Bio	0	0
Soluble Non-Bio	6	6
Colloidal Non-Bio	0	0
TSS (kg/day)	3,724	2,474
Biodegradable	59	0
Non-Biodegradable	1,620	1,620
Decay Prod Aer/Anx	73	283
Decay Prod Anaerobic	0	0
Metal Hydroxide	0	0
Metal Phosphate	0	0
Heterotrophs	947	128
Autotrophs	63	30
PAOs	431	185
PHA	0	0
Poly-P	532	229
VSS (kg/day)	2,151	1,298
Biodegradable	53	0
Non-Biodegradable	735	735
Decay Prod Aer/Anx	65	255
Decay Prod Anaerobic	0	0
Metal Hydroxide	0	0
Heterotrophs	853	115
Autotrophs	56	27
PAOs	387	167
PHA	0	0
TKN (kg-N/day)	162	124
NH_3-N (kg-N/day)	0	17
Particulate Bio Org N	3	0
Non-Bio Part Org N	42	58
Decay Prod Aer/Anx	6	22
Decay Prod Anaerobic	0	0
Heterotrophs	73	10
Autotrophs	5	2
PAOs	33	14
Non-Bio Soluble Org. N	0	0
Non-Bio Colloidal Org. N	0	0
Soluble Bio Org N	0	0
Colloidal Bio Org N	0	0
NO_3-N (kg-N/day)	2	43
TP (kg-P/day)	212	212
Bio Particulate	0	0
Non-Bio Particulate	8	13
Decay Prod Aer/Anx	2	7
Decay Prod Anaerobic	0	0
Metal Phosphate	0	0
Heterotrophs	24	3
Autotrophs	2	1
PAOs	11	5
Poly-P	165	71
Ortho-PO_4	1	112
Alkalinity (kg/day as $CaCO_3$)	89	0
H_2S (kg/day)	0	0
BOD_5 (mg/L)	8,297	2,589
COD (mg/L)	24,646	14,899
TSS (mg/L)	30,000	19,931
VSS (mg/L)	17,322	10,459
TKN (mg-N/L)	1,307	998
NH_3-N (mg-N/L)	0	138
NO_3-N (mg-N/L)	13	348
TP (mg-P/L)	1,707	1,707
Alkalinity (mg/L as CaCO3)	714	0
H_2S (mg/L)	0	0

Constituent	Influent	Effluent
Flow (m3/day)	124	124
Carbonaceous BOD_5 (kg/day)	1,030	321
Particulate	102	196
Heterotrophs	728	88
PAOs	199	37
PHA	0	0
Filtrate	0	0
COD (kg/day)	3,060	1,850
Particulate Bio	76	0
Particulate Non-Bio	1,044	1,044
Decay Prod Aer/Anx	93	362
Decay Prod Anaerobic	0	0
Heterotrophs	1,211	163
Autotrophs	80	38
PAOs	550	236
PHA	0	0
Soluble Bio	0	0
VFA	0	0
Colloidal Bio	0	0
Soluble Non-Bio	6	6
Colloidal Non-Bio	0	0
TSS (kg/day)	3,724	2,474
Biodegradable	59	0
Non-Biodegradable	1,620	1,620
Decay Prod Aer/Anx	73	283
Decay Prod Anaerobic	0	0
Metal Hydroxide	0	0
Metal Phosphate	0	0
Heterotrophs	947	128
Autotrophs	63	30
PAOs	431	185
PHA	0	0
Poly-P	532	229
VSS (kg/day)	2,151	1,298
Biodegradable	53	0
Non-Biodegradable	735	735
Decay Prod Aer/Anx	65	255
Decay Prod Anaerobic	0	0
Metal Hydroxide	0	0
Heterotrophs	853	115
Autotrophs	56	27
PAOs	387	167
PHA	0	0
TKN (kg-N/day)	162	124
NH_3-N (kg-N/day)	0	17
Particulate Bio Org N	3	0
Non-Bio Part Org N	42	58
Decay Prod Aer/Anx	6	22
Decay Prod Anaerobic	0	0
Heterotrophs	73	10
Autotrophs	5	2
PAOs	33	14
Non-Bio Soluble Org. N	0	0
Non-Bio Colloidal Org. N	0	0
Soluble Bio Org N	0	0
Colloidal Bio Org N	0	0
NO_3-N (kg-N/day)	2	43
TP (kg-P/day)	212	212
Bio Particulate	0	0
Non-Bio Particulate	8	13
Decay Prod Aer/Anx	2	7
Decay Prod Anaerobic	0	0
Metal Phosphate	0	0
Heterotrophs	24	3
Autotrophs	2	1
PAOs	11	5
Poly-P	165	71
Ortho-PO_4	1	112
Alkalinity (kg/day as $CaCO_3$)	89	0
H_2S (kg/day)	0	0

This document is the property of CH2M HILL, Inc.
The expression of the information contained in thi
document is protected under U.S. copyright law.

Facility Operating Parameters		
Bioreactor Volume, m3		3,830.42
Minimum Valid SRT, days		3.00
SRT, Days		30.85
Temperature, oC		14
Volatile Solids Loading (kg VSS/m3-day)		0.56
Volatile Solids Reduction, %		39.62%
TSS Reduction %		33.56%
SOUR mg-O2/(g-VSS x hour) at 20 oC		1.24
SOUR mg-O2/(g-TSS x hour) at 20 oC		0.65
SOUR mg-O2/(g-VSS x hour) with nitrification at 20 oC		1.74
SOUR mg-O2/(g-TSS x hour) with nitrification at 20 oC		0.91
Total AOR (kgO2/day)		1,421
% denitrification		20%
Nutrients		
Nitrogen Released Due to Digestion (transformed to NH3) (kg/day)		69.59
Nitrogen Nitrified (Kg/day)		52.51
Nitrogen Denitrified (Kg/day)		10.81
Alkalinity in Feed (Kg/day)		89
Alkalinity Released Due to Digestion (Kg/day)		251
Alkalinity Lost Through Nitrification (Kg/day)		378
Alkalinity Produced Through Denitrification (Kg/day)		39
Alkalinity Discharged (Kg/day		0
Kinetic Limitation on Nitrification		
DO, mg/L		2
Maximum Specific Growth Rate (μ_{max}), Day^{-1} at Operational DO		0.3408
Ammonia in Digester Effluent Due to Kinetic Limitations		
	a	0.26
	b	-1,294.93
	c	21.29
Effluent Ammonia (mg-N/L) for Kinetic Limitation		0.02
Potential Nitrification Associated with Kinetics (Kg/day)		69.61

Aerobic Biological Kinetics	
Parameter	**Temperature**
Heterotrophs	
Maximum Specific Growth Rate (μ_{max}), Day^{-1}	2.60
Half Saturation for Organics (K_s), mg BOD_5/L	3.13
Half Saturation for Organics (K_s), mg Bio COD/L	5.00
True Yield (Y_H), mg COD/mg COD (aerobic)	0.67
Decay Rate (b_H), Day^{-1}	0.22
Inactive Fraction (f_b)	0.19
Volatile Fraction, % of TSS	0.90
COD/VSS Ratio, mg COD/mg VSS	1.42
Nitrogen Content, N/VSS (%)	0.09
Phosphorus Content, P/VSS (%	0.03
Autotrophs	
Maximum Specific Growth Rate (μ_{max}), Day^{-1}	0.43
Half Saturation for NH_3-N (K_N), mg-N/L	0.49
Half Saturation for O_2 (K_O), mg-O_2/L	0.50
True Yield (Y_A), mg TSS/mg NH_3-N	0.15
True Yield (Y_A), mg COD/mg NH_3-N	0.19
Decay Rate (b_A), Day^{-1}	0.04
Volatile Fraction, % of TSS	0.90
COD/VSS Ratio, mg COD/mg VSS	1.42
Nitrogen Content, N/VSS (%)	0.09
Phosphorus Content, P/VSS (%	0.03
PAOs	
True Yield (Y_H), mg TSS/mg BOD_5	0.76
True Yield (Y_H), mg COD/mg COD	0.62
Decay Rate (b_H), Day^{-1}	0.04
Inactive Fraction (f_b)	0.19
Volatile Fraction, % of TSS	0.90
COD/VSS Ratio, mg COD/mg VSS	1.42
Nitrogen Content, N/VSS (%)	0.09
Phosphorus Content, P/VSS (%)	0.03
TSS Content of Poly-F	3.23

This document is the property of CH2M HILL, Inc.
The expression of the information contained in thi
document is protected under U.S. copyright law.

Diurnal Peak Flow Conditions

Constituent	Influent	Effluent	
Flow (m3/day)	182	182	
Carbonaceous BOD_5 (kg/day	1,520	472	
Particulate	527	288	
Heterotrophs	725	130	
PAOs	268	55	
PHA	0	0	
Filtrate	0	0	
COD (kg/day)	4,480	2,719	
Particulate Bio	98	0	
Particulate Non-Bio	1,568	1,535	
Decay Prod Aer/Anx	777	532	
Decay Prod Anaerobic	0	0	
Heterotrophs	1,204	240	
Autotrophs	86	56	
PAOs	740	348	
PHA	0	0	
Soluble Bio	0	0	
VFA	0	0	
Colloidal Bio	0	0	
Soluble Non-Bio	8	9	
Colloidal Non-Bio	0	0	
TSS (kg/day)	5,475	3,637	
Biodegradable	76	0	
Non-Biodegradable	2,288	2,381	
Decay Prod Aer/Anx	608	416	
Decay Prod Anaerobic	0	0	
Metal Hydroxide	0	0	
Metal Phosphate	0	0	
Heterotrophs	942	188	
Autotrophs	67	44	
PAOs	579	272	
PHA	0	0	
Poly-P	914	336	
VSS (kg/day)	3,150	1,909	
Biodegradable	69	0	
Non-Biodegradable	1,104	1,081	
Decay Prod Aer/Anx	547	375	
Decay Prod Anaerobic	0	0	
Metal Hydroxide	0	0	
Heterotrophs	848	169	
Autotrophs	60	39	
PAOs	521	245	
PHA	0	0	
TKN (kg-N/day)	231	182	
NH_3-N (kg-N/day)	0	25	
Particulate Bio Org N	6	0	
Non-Bio Part Org N	63	85	
Decay Prod Aer/Anx	39	32	
Decay Prod Anaerobic	63	0	
Heterotrophs	73	15	
Autotrophs	5	3	
PAOs	45	21	
Non-Bio Soluble Org. N	0	1	
Non-Bio Colloidal Org. N	0	0	
Soluble Bio Org N	0	0	
Colloidal Bio Org N	0	0	
NO_3-N (kg-N/day)	2	64	
TP (kg-P/day)	352	312	
Bio Particulate	2	0	
Non-Bio Particulate	10	19	
Decay Prod Aer/Anx	16	11	
Decay Prod Anaerobic	0	0	
Metal Phosphate	0	0	
Heterotrophs	24	5	
Autotrophs	2	1	
PAOs	15	7	
Poly-P	283	104	
Ortho-PO_4	1	165	
Alkalinity (kg/day as $CaCO_3$)	91	0	
H_2S (kg/day)	0	0	
BOD_5 (mg/L)	8,329	2,589	
COD (mg/L)	24,551	14,899	
TSS (mg/L)	30,000	19,931	
VSS (mg/L)	17,259	10,459	
TKN (mg-N/L)	1,266	998	
NH_3-N (mg-N/L)	1	138	
NO_3-N (mg-N/L)	11	348	
TP (mg-P/L)	1,927	1,707	
Alkalinity (mg/L as CaCO3)	499	0	
H_2S (mg/L)	0	0	

This document is the property of CH2M HILL, Inc.
The expression of the information contained in th
document is protected under U.S. copyright law.

Model Results Summary for Alternative 3, Plant 2 Conventional WWTP

Projected 2028 Average Daily Flow = 988 m^3/day

Projected 2028 Maximum Month Flow = 1,383 m^3/day

Estimated Equipment Sizing:

- 3 process reactors at 1,173 m^3 each
- 2 circular clarifiers at 7 m diameter each
- 3,331 m^3 total aerobic digester volume

Use instructions: See Comment in this cell.

Linked Model Input	Current Run:	Comments	Scenarios: Max Month (winter)	Comments	Max Month (summer)	Comments	Average Day	Comments	For Class 1 Reliability	Comments
Flow (m3/day)	1,383	MM	1,383	MM	1,383	MM	986	AD Flow	1,037	75% of MM
Diurnal Flow Peaking Factor	1.43	MxD:MM	1.43	MxD:MM	1.43	MxD:MM	2	MxD:AD	1.43	Same as MxD:MM
CBOD5 (kg/day)	1,106	MM loading	1,106	MM loading	1,106	MM loading	790	AD Loading	829	75% of MM loading
TSS (kg/day)	1,244	MM loading	1,244	MM loading	1,244	MM loading	889	AD Loading	933	75% of MM loading
% VS	75%		75%		75%		75%		75%	
TKN (kg/day)	207	MM loading	207	MM loading	207	MM loading	148	AD Loading	155	75% of MM loading
Ammonia -N (kg/day)	124	MM loading	124	MM loading	124	MM loading	89	AD Loading	93	75% of MM loading
Total Phosphate - P (kg/day)	34	MM loading	34	MM loading	34	MM loading	25	AD Loading	26	75% of MM loading
Alkalinity (kg/day)	1382	Assumed at 1000 mg/L	1382	Assumed at 1000 mg/L	1382	Assumed at 1000 mg/L	987	Assumed at 1000 mg/L	1037	Assumed at 1000 mg/L
Hydrogen Sulfide (kg/day)	33	Assumed at 24 mg/L	33	Assumed at 24 mg/L	33	Assumed at 24 mg/L	24	Assumed at 24 mg/L	25	Assumed at 24 mg/L
Number of Aeration Basin Trains Online	3		3		3		3		3	
Volume per Train (m3)	1,173		1,173		1,173		1,173		1,173	
Total Aeration Basin Volume in Service (m3)	3,520		3,520		3,520		3,520		3,520	
SRT	10		10		10		10		10	
System pH	7.2		7.2		7.2		7.2		7.2	
Temperature °C	14	Minimum Month	14	Minimum Month	24.6	Maximum month	16.8	Annual average	14	Minimum Month
Nitrified Recycle Rate (% of Aer Basin influent flow)	605%		605%		605%		605%		605%	
Number of Secondary Clarifiers Online	2		2		2		2		1	
Surface Area per Secondary Clarifier (sq m)	38		38		38		38		38	
Total Secondary Clarifier Area (sq m)	76		76		76		76		38	
Secondary Clarifier Diameter (m)	7		7		7		7		7	
SVI (mL/g)	150		150		150		150		150	
Average Secondary Effluent TSS (mg/L)	15	Fixed	15	Fixed	15	Fixed	15	Fixed	15	Fixed
Peak Secondary Effluent TSS (mg/L)	20	Fixed	20	Fixed	20	Fixed	20	Fixed	20	Fixed
Average RAS Underflow Rate (% of Inf Q)	45.8%	Calculated	45.8%	Calculated	45.8%	Calculated	44.0%	Calculated	44.3%	Calculated
Peak RAS Underflow Rate (% of Inf Q)	63.7%	Calculated	63.7%	Calculated	63.4%	Calculated	46.3%	Calculated	62.0%	Calculated
Thickener Solids Capture (%)	85%		85%		85%		85%		85%	
WAS Concentration (mg/L)	8,000	No thickener, assumed at 8,000 mg	8,000	No thickener, assumed at 8,000 mg/L	8,000	No thickener, assumed at 8,000 mg/L	8,000	No thickener, assumed at 8,000 mg/L	8,000	No thickener, assumed at 8,000 mg/L
AerDig1 Volume (m3)	3,331		3,331		3,331		3,331		3,331	
AerDig1 Temperature (°C)	14	Minimum Month	14	Minimum Month	24.6	Maximum month	16.8	Annual average	14	Minimum Month
AerDig1 DO (mg/L)	2		2		2		2		2	
AerDig1 % Denitrification	20%		20%		20%		20%		20%	
Dewatering Solids Capture (%)	95%		95%		95%		95%		95%	
Dewatered Sludge Concentration (%)	20%		20%		20%		20%		20%	
Results										
SRT	10.0		10.0		10.0		10.0		10.0	
Final Anoxic Zone NO3	0.12	want < 0.5	0.12	want < 0.5	0.05	want < 0.5	0.08	want < 0.5	0.10	want < 0.5
Secondary Effluent TSS (mg/L)	15.0	want < 60 (goal = 42)	15.0	want < 60 (goal = 42)	15.0	want < 60 (goal = 42)	15.0	want < 60 (goal = 42)	15.0	want < 60 (goal = 42)
Secondary Effluent CBOD5 (mg/L)	4.69	want < 60 (goal = 42)	4.69	want < 60 (goal = 42)	4.12	want < 60 (goal = 42)	4.44	want < 60 (goal = 42)	4.60	want < 60 (goal = 42)
Secondary Effluent COD (mg/L)	60.3	want < 150, (goal = 105.0)	60.3	want < 150, (goal = 105.0)	59.8	want < 150, (goal = 105.0)	59.9	want < 150, (goal = 105.0)	60.1	want < 150, (goal = 105.0)
Secondary Effluent TN (mg/L)	16.0	want < 70, (goal = 49.0)	16.0	want < 70, (goal = 49.0)	16.0	want < 70, (goal = 49.0)	15.6	want < 70, (goal = 49.0)	15.7	want < 70, (goal = 49.0)
Secondary Effluent NH3-N (mg/L)	0.15		0.15		0.08		0.09		0.15	
Secondary Effluent NO3-N (mg/L)	12.4	want < 18 (goal is 12.6)	12.4	want < 18 (goal is 12.6)	12.5	want < 18 (goal is 12.6)	12.0	want < 18 (goal is 12.6)	12.0	want < 18 (goal is 12.6)
Secondary Effluent TP (mg/L)	5.51	want < 15 (goal = 10.5)	5.51	want < 15 (goal = 10.5)	1.98	want < 15 (goal = 10.5)	6.09	want < 15 (goal = 10.5)	6.96	want < 15 (goal = 10.5)
Influent COD (mg/L)	1,569	~1320 mg/L per ops data	1,569	~1320 mg/L per ops data	1,569	~1320 mg/L per ops data	1,569	~1320 mg/L per ops data	1,569	~1320 mg/L per ops data
Corresponding Average MLSS (mg/L)	3,314	want < 3400 at MM	3,315	want < 3400 at MM	3,284	want < 3400 at MM	2,399	want < 3400 at MM	2,509	want < 3400 at MM
Secondary Influent MLSS (mg/L)	3,296		3,296		3,263		2,381		2,491	
Nitrified Recycle Rate (m3/day)	9,136		9,136		9,137		6,788		7,079	
Solids Loading Rate To Secondary Clarifiers (kg/day-sq m)	95.26		95.26		94.32		50.50		110.46	
RAS Rate (m3/day)	691.51		691.51		691.51		493.12		518.69	
Corresponding WAS (kg/day)	1,146		1,146		1,135		830		868	
Combined Thickened Feed Sludge to Aerobic Dig. (kg/day)	974		974		965		705		737	
Digester Volatile Solids Loading Rate (kg/day-m3)	0.17		0.17		0.16		0.12		0.13	
Digester SRT	27.35		27.35		27.61		37.79		36.13	
Model Prediction of VS Destruction (combined)	38.61%		38.61%		36.35%		40.52%		40.75%	
Digester Alkalinity Limited?	no		no		no		no		no	
SOUR in Digester (mg O2/hour/gram TS)	0.71	want < 1.5 at 20 C, goal = 1.13	0.71	want < 1.5 at 20 C, goal = 1.13	0.62	want < 1.5 at 20 C, goal = 1.13	0.55	want < 1.5 at 20 C, goal = 1.13	0.58	want < 1.5 at 20 C, goal = 1.13
Dewatered Solids From Plant (kg/day)	625		625		627		432		454	
PBNR AOR (kg/day)	1,676		1,676		1,738		1,208		1,253	
PBNR SOR (kg/day)	4,870		4,870		5,778		3,305		3,353	
PBNR Total Required Air Rate in Zones 3-5 (N*m3/hr)	2,337		2,337		2,839		1,709		1,696	

This document is the property of CH2M HILL, Inc.
The expression of the information contained in this
document is protected under U.S. copyright law.

Stoichiometric Parameters		Value	Default	Units
Hydrolysis of Particulate Substrate: X_S				
Production of Soluble Inert COD: S_I	f_{SI}	0.00		g COD/g COD
Heterotrophic Organisms: X_H				
Yield	Y_H	0.6660		g COD/g COD
Fraction of Lysis Inerts	f_{XI}	0.08		g COD/g COD
Phosphorus Accumulating Organisms: X_{PAO}				
Yield (biomass/PHA)	Y_{PAO}	0.6250		g COD/g COD
Phosphate release per PHA Store	Y_{PO4}	0.40		g P/g COD
PHA requirement for PP storage	Y_{PHA}	0.20		g COD/g P
Fraction of Lysis Inerts	f_{XI}	0.08		g COD/g COD
Autotrophic Organisms: X_{AUT}				
Yield per NO_3-N	Y_A	0.19		g COD/g N
Fraction of Lysis Inerts	f_{XI}	0.08		g COD/g COD
Methanol Degraders-Population 1: X_{M1}				
Yield per MeOH COD	Y_{M1}	0.58		g COD/g COD
Fraction of Lysis Inerts	f_{XI}	0.10		g COD/g COD
Methanol Degraders-Population 2: X_{M2}				
Yield per MeOH COD	Y_{M2}	0.36		g COD/g COD
Fraction of Lysis Inerts	f_{XI}	0.10		g COD/g COD

Conversion Factors for Conservation Equatior		Value	Default	Units
Nitrogen Content of:	Check Delta	0.00		
Soluble Inert COD: S_I	i_{NSI}	0.0600	0.01	g N/g COD
Fermentable Substrate: S_F	i_{NSF}	0.0392	0.03	g N/g COD
Inert Particulate COD: X_I	i_{NXI}	0.0400	0.02	g N/g COD
Slowly Biodegradable Substrate: X_S	i_{NXS}	0.0392	0.04	g N/g COD
Biomass: X_H, X_{PAO}, X_{AUT}, X_{m1}, X_{m2}	i_{NBM}	0.0606	0.07	g N/g COD
Decay Products:, $X_{d,aa}$	i_{NXdaa}	0.0606	0.02	g N/g COD
Phosphorus Content of:	Check Delta	0.00		
Soluble Inert COD: S_I	i_{PSI}	0.0000	0.00	g P/g COD
Fermentable Substrate: S_F	i_{PSF}	0.0000	0.01	g P/g COD
Inert Particulate COD: X_I	i_{PXI}	0.0073	0.01	g P/g COD
Slowly Biodegradable Substrate: X_S	i_{PXS}	0.0053	0.01	g P/g COD
Biomass: X_H, X_{PAO}, X_{AUT}	i_{PBM}	0.0200	0.02	g P/g COD
Decay Products:, $X_{d,aa}$	i_{PXdaa}	0.0200	1.02	g P/g COD
TSS to COD Ratio for:				
Inert Particulate COD: X_I	i_{TSSXI}	0.7825	0.75	g TSS/g COD
Slowly Biodegradable Substrate: X_S	i_{TSSXS}	0.7825	0.75	g TSS/g COD
Biomass: X_H, X_{PAO}, X_{AUT}, X_{m1}, X_{m2}	i_{TSSBM}	0.7825	0.90	g TSS/g COD
Decay Products: $X_{d,aa}$	$i_{TSSXdaa}$	0.7825	0.75	g TSS/g COD

Nitrogen Ratio Adjustment			Ratio
Fermentable Substrate: S_F	i_{NSF}	0.0392	
Slowly Biodegradable Substrate: X_S	i_{NXS}	0.0392	1.00
Alternate Nitrogen Ratic			
Fermentable Substrate: S_F	i_{NSF}	0.0535	
Slowly Biodegradable Substrate: X_S	i_{NXS}	0.0357	1.50

Kinetic Parameters		Unit	Typical Values 20 °C	10 °C	Temperature 14.0 deg. C
Hydrolysis of Particulate Substrate: X_S					
k_h	(Hydrolysis Rate)	1/day	3.00	2.00	2.35
n_{NO3}	(Anoxic Reduction Factor)		0.60	0.60	0.60
n_{fe}	(Anaerobic Reduction Factor)		0.40	0.40	0.40
K_{O2}	(Oxygen Inhibition)	g O_2/m^3	0.20	0.20	0.20
K_{NO3}	(Nitrate Inhibition)	g N/m^3	0.50	0.50	0.50
K_X	(Particulate Inhibition)	g COD/g COD	0.10	0.10	0.10
Hydrolysis of Decay Products: X_{daa}					
K_{hdaa}	(Hydrolysis Rate)	1/d	1.20		0.94
K_{O2Ydaa}	(Oxygen Inhibition)	g O_2/m^3	0.10		0.10
$K_{NO3Ydaa}$	(Nitrate Inhibition)	g N/m^3	0.10		0.10
K_{Xdaa}	(Particulate Inhibition)	g X_{daa}/g X_H	0.10		0.10
Heterotrophic Organisms: X_H					
μ_H	(Max Growth Rate)	1/day	6.00	3.00	2.60
q_{fe}	(Max Fermentation Rate)	g COD/(g COD*d)	3.00	1.50	1.98
n_{NO3}	(Anoxic Reduction Factor)		0.80	0.80	0.80
b_H	(Decay Rate)	1/day	0.40	0.20	0.50
K_{O2}	(Oxygen Inhibition)	g O_2/m^3	0.20	0.20	0.20
K_F	(Growth on S_F)	g COD/m^3	4.00	4.00	2.00
K_{fe}	(Fermentation of S_F)	g COD/m^3	4.00	4.00	4.00
K_A	(Growth on S_A)	g COD/m^3	4.00	4.00	2.00
K_{NO3}	(Anoxic Growth)	g N/m^3	0.50	0.50	0.50
K_{NH4}	(Nitrogen Inhibition)	g N/m^3	0.05	0.05	0.05
K_P	(Phosphorus Inhibition)	g P/m^3	0.01	0.01	0.01
K_{ALK}	(Alkalininty Inhibition)	mole HCO_3^-/m^3	0.10	0.10	0.10
Phosphorus Accumulating Organisms: X_{PAO}					
q_{PHA}	(X_{PHA} Storage Rate)	g X_{PHA}/(g X_{PAO}*d)	3.00	2.00	6.00
q_{PP}	(X_{PP} Storage Rate)	g X_{PP}/(g X_{PAO}*d)	1.50	1.00	1.18
μ_{PAO}	(Max Growth Rate)	1/day	1.00	0.67	0.79
n_{NO3}	(Anoxic Reduction Factor)		0.60	0.60	0.60
b_{PAO}	(X_{PAO} Decay Rate)	1/day	0.20	0.10	0.10
b_{PP}	(X_{PP} Decay Rate)	1/day	0.20	0.10	0.10
b_{PHA}	(X_{PHA} Decay Rate)	1/day	0.20	0.10	0.10
K_{O2}	(Oxygen Inhibition)	g O_2/m^3	0.20	0.20	0.20
K_{NO3}	(Anoxic Growth)	g N/m^3	0.50	0.50	0.50
K_A	(Growth on S_A)	g COD/m^3	4.00	4.00	2.00
K_{NH4}	(Nitrogen Inhibition)	g N/m^3	0.05	0.05	0.0050
K_{PS}	(Phosphorus Inhibition of PP)	g P/m^3	0.20	0.20	0.20
K_P	(Phosphorus Inhibition of Growth)	g P/m^3	0.01	0.01	0.0050
K_{ALK}	(Alkalininty Inhibition)	mole HCO_3^-/m^3	0.10	0.10	0.10
K_{PP}	(Polyphosphate Inhibition)	g X_{PP}/g X_{PAO}	0.01	0.01	0.02
K_{MAX}	(Max Ratio of X_{PP}/X_{PAO})	g X_{PP}/g X_{PAO}	0.34	0.34	0.34
K_{IPP}	(Inhibition of PP Storage)	g X_{PP}/g X_{PAO}	0.02	0.02	0.02
K_{PHA}	(Saturation for PHA)	g X_{PHA}/g X_{PAO}	0.01	0.01	0.01
Autotrophic Organisms: X_{AUT}					
μ_{AUT}	(Maximum Growth Rate)	1/day	1.00	0.35	0.42
b_{AUT}	(Decay Rate)	1/day	0.15	0.05	0.04
K_{O2}	(Oxygen Inhibition)	g O_2/m_3	0.50	0.50	0.50
K_{NH4}	(Nitrogen Inhibition: SUBSTRATE)	g N/m^3	1.00	1.00	0.49
K_{ALK}	(Alkalininty Inhibition)	mole HCO_3^-/m^3	0.50	0.50	0.01
K_P	(Phosphorus Inhibition of Growth)	g P/m^3	0.01	0.01	0.0050
Precipitation					
k_{PRE}	(Rate of Phosphorus Precipitation)	m^3/(g $Me(OH)_3$*d)	1.00	1.00	2.00
k_{RED}	(Rate of Phosphous Redissolution)	1/day	0.60	0.60	0.10
K_{ALK}	(Alkalininty Inhibition)	mole HCO_3^-/m^3	0.50	0.50	0.50
Methanol Degrading Organisms - Population 1					
μ_{M1}	(Maximum Growth Rate)	1/day	3.88		7.00
n_{NO3M1}	(Anoxic Reduction Factor)		0.21		0.20
b_{M1}	(Decay Rate)	1/day	0.18		0.20
K_{O2M1}	(Oxygen Inhibition)	g O_2/m^3	0.20		0.50
K_{M1}	(Growth on Methanol)	g COD/m^3	4.00		4.00
K_{NO3M1}	(Anoxic Growth)	g N/m^3	0.50	0.50	0.80
K_{NH4M1}	(Nitrogen Inhibition)	g N/m^3	0.05		0.05
K_{ALKM1}	(Alkalinity Inhibition)	mole HCO_3^-/m^3	0.10		0.10
K_{PM1}	(Phosphorus Inhibition)	g P/m^3	0.01		0.01
Methanol Degrading Organisms - Population 2					
μ_{M2}	(Maximum Growth Rate)	1/day	1.72		7.00
n_{NO3M2}	(Anoxic Reduction Factor)		0.76		0.80
b_{M2}	(Decay Rate)	1/day	0.25		0.25
K_{O2M2}	(Oxygen Inhibition)	g O_2/m^3	0.20		0.50
K_{M2}	(Growth on Methanol)	g COD/m^3	4.00		1.00
K_{NO3M2}	(Anoxic Growth)	g N/m^3	0.50	0.50	0.50
K_{NH4M2}	(Nitrogen Inhibition)	g N/m^3	0.05		0.05
K_{ALKM2}	(Alkalinity Inhibition)	mole HCO_3^-/m^3	0.10		0.10
K_{PM2}	(Phosphorus Inhibition)	g P/m^3	0.01		0.01

This document is the property of CH2M HILL, Inc.
The expression of the information contained in thi
document is protected under U.S. copyright law.

Mass Balance for Average Flow Conditions

Constituent	Raw Wastewater (RW)	Main Recycle Influent (RecyI)	Main Recycled Stream (Recycle)	Main Combined Recycle Effluent (RecyE)	Main Bioreactor Influent (BI)	Main Secondary Clarifier Influent (SI)	Main Secondary Clarifier Effluent (SE)	Plant Effluent (PLE)	Main WAS	GBT WAS Thickener Influent (TWASI)	GBT Thickened WAS (TWAS)	AerDig1 Aerobic Digester Influent (ADI)	AerDig1 Aerobic Digester Effluent (ADE)	BFP Dewatering Influent (DWI)	BFP Dewatered Sludge (DWE)	Biosolids to Dispoal	GBT WAS Thickening Recycle (TWASR)	BFP Dewatering Recycle (DWR)	Recy Combined Discharge	Ender
Flow (m3/day)	1,383	1,383	127	1,510	1,510	2,202	1,380	1,380	130	130	122	122	122	122	3	3	8	119	127	
Carbonaceous BOD_5 (kg/day)	1,106	1,106	52	1,158	1,158	2,006	6	6	317	317	269	269	86	86	82	82	47	4	52	
COD (kg/day)	2,170	2,170	171	2,341	2,341	6,049	83	83	945	945	804	804	495	495	465	465	141	30	171	
TSS (kg/day)	1,245	1,245	205	1,450	1,450	7,257	21	21	1,146	1,146	974	974	657	657	624	624	172	33	205	
VSS (kg/day)	934	934	116	1,050	1,050	4,186	12	12	661	661	562	562	345	345	328	328	99	17	116	
TKN (kg-N/day)	207	207	9	217	217	322	5	5	50	50	43	43	29	29	27	27	7	2	9	
NH_3-N (kg-N/day)	124	124	0	124	124	0	0	0	0	0	0	0	0	0	0	0	0	0	0	
NO_3-N (kg-N/day)	0	0	15	15	15	27	17	17	2	2	2	2	15	15	0	0	0	15	15	
TP (kg-P/day)	34	34	39	74	74	424	8	8	66	66	56	56	56	56	27	27	10	29	39	
Alkalinity (kg/day as $CaCO_3$)	1,382	1,382	42	1,424	1,424	1,575	987	987	93	93	87	87	37	37	1	1	6	36	42	
H_2S (kg/day)	33	33	0	33	33	0	0	0	0	0	0	0	0	0	0	0	0	0	0	
BOD_5 (mg/L)	800	800	408	767	767	911	5	5	2,432	2,432	2,211	2,211	707	707	26,182	26,182	5,607	36	408	
COD (mg/L)	1,569	1,569	1,347	1,550	1,550	2,747	60	60	7,255	7,255	6,600	6,600	4,069	4,069	149,059	149,059	16,666	253	1,347	
TSS (mg/L)	900	900	1,611	960	960	3,295	15	15	8,800	8,800	8,000	8,000	5,399	5,399	200,000	200,000	20,290	277	1,611	
VSS (mg/L)	675	675	916	695	695	1,900	9	9	5,075	5,075	4,614	4,614	2,833	2,833	104,938	104,938	11,703	145	916	
TKN (mg-N/L)	150	150	73	143	143	146	4	4	385	385	350	350	234	234	8,584	8,584	884	15	73	
NH_3-N (mg-N/L)	90	90	0	82	82	0	0	0	0	0	0	0	0	0	0	0	0	0	0	
NO_3-N (mg-N/L)	0	0	119	10	10	12	12	12	12	12	12	12	127	127	127	127	12	127	119	
TP (mg-P/L)	25	25	307	49	49	193	5	5	507	507	461	461	461	461	8,641	8,641	1,162	246	307	
Alkalinity (mg/L as CaCO3)	999	999	330	943	943	715	715	715	715	715	715	715	303	303	303	303	715	303	330	
H_2S (mg/L)	24	24	0	22	22	0	0	0	0	0	0	0	0	0	0	0	0	0	0	

Mass Balance for Diurnal Peak Flow Conditions

Constituent	Raw Wastewater (RW)	Main Recycle Influent (RecyI)	Main Recycled Stream (Recycle)	Main Combined Recycle Effluent (RecyE)	Main Bioreactor Influent (BI)	Main Secondary Clarifier Influent (SI)	Main Secondary Clarifier Effluent (SE)		Main WAS	GBT WAS Thickener Influent (TWASI)	GBT Thickened WAS (TWAS)	AerDig1 Aerobic Digester Influent (ADI)	AerDig1 Aerobic Digester Effluent (ADE)	BFP Dewatering Influent (DWI)	BFP Dewatered Sludge (DWE)		GBT WAS Thickening Recycle (TWASR)	BFP Dewatering Recycle (DWR)	Recy Combined Discharge	
Flow (m3/day)	1,978	1,976	193	2,171	2,171	3,554	1,973	1,973	198	198	179	179	179	179	5	5	19	174	193	
Carbonaceous BOD_5 (kg/day)	1,438	1,438	76	1,515	1,515	2,449	8	8	305	305	397	397	126	126	120	120	70	6	76	
COD (kg/day)	2,821	2,821	251	3,072	3,072	11,175	118	118	1,383	1,383	1,176	1,176	728	728	684	684	207	44	251	
TSS (kg/day)	1,617	1,617	301	1,918	1,918	13,503	39	39	1,685	1,685	1,432	1,432	966	966	918	918	253	48	301	
VSS (kg/day)	1,213	1,213	171	1,384	1,384	7,760	23	23	968	968	823	823	507	507	482	482	145	25	171	
TKN (kg/day)	269	269	16	286	286	581	9	9	72	72	61	61	42	42	39	39	11	3	16	
NH_3-N (kg-N/day)	162	162	0	162	162	4	2	2	0	0	0	0	0	0	0	0	0	0	0	
NO_3-N (kg-N/day)	0	0	22	22	22	39	22	22	2	2	2	2	23	23	1	1	0	22	22	
TP (kg-P/day)	45	45	59	104	104	885	12	12	109	109	93	93	83	83	40	40	16	43	59	
Alkalinity (kg/day as $CaCO_3$)	1,797	1,797	63	1,859	1,859	1,825	1,013	1,013	102	102	92	92	54	54	1	1	10	53	63	
H_2S (kg/day)	43	43	0	43	43	0	0	0	0	0	0	0	0	0	0	0	0	0	0	
BOD_5 (mg/L)	727	727	396	698	698	689	4	4	1,544	1,544	2,220	2,220	707	707	26,182	26,182	3,723	36	396	
COD (mg/L)	1,426	1,426	1,300	1,415	1,415	3,144	60	60	6,993	6,993	6,572	6,572	4,069	4,069	149,059	149,059	10,995	253	1,300	
TSS (mg/L)	818	818	1,558	884	884	3,799	20	20	8,516	8,516	8,000	8,000	5,399	5,399	200,000	200,000	13,420	277	1,558	
VSS (mg/L)	613	613	883	637	637	2,183	11	11	4,894	4,894	4,598	4,598	2,833	2,833	104,938	104,938	7,712	145	883	
TKN (mg-N/L)	136	136	84	132	132	163	4	4	362	362	340	340	234	234	8,584	8,584	568	15	84	
NH_3-N (mg-N/L)	82	82	0	74	74	1	1	1	1	1	1	1	0	0	0	0	1	0	0	
NO_3-N (mg-N/L)	0	0	115	10	10	11	11	11	11	11	11	11	127	127	127	127	11	127	115	
TP (mg-P/L)	0	23	306	48	48	249	6	6	553	553	519	519	461	461	8,641	8,641	868	246	306	
Alkalinity (mg/L as CaCO3)	908	908	323	856	856	513	513	513	513	513	513	513	303	303	303	303	513	303	323	
H_2S (mg/L)	22	22	0	20	20	0	0	0	0	0	0	0	0	0	0	0	0	0	0	

This document is the property of CH2M HILL, Inc.
The expression of the information contained in this
document is protected under U.S. copyright law.

AerDig1

Aerobic Digester Module

Average Conditions

Constituent	Influent	Effluent	
Flow (m3/day)	122	122	
Carbonaceous BOD_5 (kg/day	269	86	
Particulate	26	50	
Heterotrophs	190	26	
PAOs	52	10	
PHA	0	0	
Filtrate	0	0	
COD (kg/day)	804	495	
Particulate Bio	20	0	
Particulate Non-Bio	273	273	
Decay Prod Aer/An	24	92	
Decay Prod Anaerobic	0	0	
Heterotrophs	316	47	
Autotrophs	20	11	
PAOs	145	67	
PHA	0	0	
Soluble Bio	0	0	
VFA	0	0	
Colloidal Bio	0	0	
Soluble Non-Bio	6	6	
Colloidal Non-Bio	0	0	
TSS (kg/day)	974	657	
Biodegradable	15	0	
Non-Biodegradable	423	423	
Decay Prod Aer/Anx	19	72	
Decay Prod Anaerobic	0	0	
Metal Hydroxide	0	0	
Metal Phosphate	0	0	
Heterotrophs	247	37	
Autotrophs	16	8	
PAOs	113	52	
PHA	0	0	
Poly-P	140	64	
VSS (kg/day)	562	345	
Biodegradable	14	0	
Non-Biodegradable	192	192	
Decay Prod Aer/Anx	17	65	
Decay Prod Anaerobic	0	0	
Metal Hydroxide	0	0	
Heterotrophs	223	33	
Autotrophs	14	8	
PAOs	102	47	
PHA	0	0	
TKN (kg-N/day)	43	29	
NH_3-N (kg-N/day)	0	0	
Particulate Bio Org N	1	0	
Non-Bio Part Org N	11	15	
Decay Prod Aer/Anx	1	6	
Decay Prod Anaerobic	0	0	
Heterotrophs	19	3	
Autotrophs	1	1	
PAOs	9	4	
Non-Bio Soluble Org. N	0	0	
Non-Bio Colloidal Org. N	0	0	
Soluble Bio Org N	0	0	
Colloidal Bio Org N	0	0	
NO_3-N (kg-N/day)	2	15	
TP (kg-P/day)	56	56	
Bio Particulate	0	0	
Non-Bio Particulate	2	3	
Decay Prod Aer/Anx	0	2	
Decay Prod Anaerobic	0	0	
Metal Phosphate	0	0	
Heterotrophs	6	1	
Autotrophs	0	0	
PAOs	3	1	
Poly-P	43	20	
Ortho-PO_4	1	29	
Alkalinity (kg/day as $CaCO_3$)	87	37	
H_2S (kg/day)	0	0	
BOD_5 (mg/L)	2,211	707	
COD (mg/L)	6,600	4,069	
TSS (mg/L)	8,000	5,399	
VSS (mg/L)	4,614	2,833	
TKN (mg-N/L)	350	234	
NH_3-N (mg-N/L)	0	0	
NO_3-N (mg-N/L)	12	127	
TP (mg-P/L)	461	461	
Alkalinity (mg/L as CaCO3)	715	303	
H_2S (mg/L)	0	0	

Constituent	Influent	Effluent
Flow (m3/day)	122	122
Carbonaceous BOD_5 (kg/day)	269	86
Particulate	26	50
Heterotrophs	190	26
PAOs	52	10
PHA	0	0
Filtrate	0	0
COD (kg/day)	804	495
Particulate Bio	20	0
Particulate Non-Bio	273	273
Decay Prod Aer/An	24	92
Decay Prod Anaerobic	0	0
Heterotrophs	316	47
Autotrophs	20	11
PAOs	145	67
PHA	0	0
Soluble Bio	0	0
VFA	0	0
Colloidal Bio	0	0
Soluble Non-Bio	6	6
Colloidal Non-Bio	0	0
TSS (kg/day)	974	657
Biodegradable	15	0
Non-Biodegradable	423	423
Decay Prod Aer/Anx	19	72
Decay Prod Anaerobic	0	0
Metal Hydroxide	0	0
Metal Phosphate	0	0
Heterotrophs	247	37
Autotrophs	16	8
PAOs	113	52
PHA	0	0
Poly-P	140	64
VSS (kg/day)	562	345
Biodegradable	14	0
Non-Biodegradable	192	192
Decay Prod Aer/Anx	17	65
Decay Prod Anaerobic	0	0
Metal Hydroxide	0	0
Heterotrophs	223	33
Autotrophs	14	8
PAOs	102	47
PHA	0	0
TKN (kg-N/day)	43	29
NH_3-N (kg-N/day)	0	0
Particulate Bio Org N	1	0
Non-Bio Part Org N	11	15
Decay Prod Aer/Anx	1	6
Decay Prod Anaerobic	0	0
Heterotrophs	19	3
Autotrophs	1	1
PAOs	9	4
Non-Bio Soluble Org. N	0	0
Non-Bio Colloidal Org. N	0	0
Soluble Bio Org N	0	0
Colloidal Bio Org N	0	0
NO_3-N (kg-N/day)	2	15
TP (kg-P/day)	56	56
Bio Particulate	0	0
Non-Bio Particulate	2	3
Decay Prod Aer/Anx	0	2
Decay Prod Anaerobic	0	0
Metal Phosphate	0	0
Heterotrophs	6	1
Autotrophs	0	0
PAOs	3	1
Poly-P	43	20
Ortho-PO_4	1	29
Alkalinity (kg/day as $CaCO_3$)	87	37
H_2S (kg/day)	0	0

This document is the property of CH2M HILL, Inc.
The expression of the information contained in thi
document is protected under U.S. copyright law.

Facility Operating Parameters		
Bioreactor Volume, m3		3,330.80
Minimum Valid SRT, days		3.00
SRT, Days		27.36
Temperature, oC		14
Volatile Solids Loading (kg VSS/m3-day)		0.17
Volatile Solids Reduction, %		38.61%
TSS Reduction %		32.52%
SOUR mg-O2/(g-VSS x hour) at 20 oC		1.34
SOUR mg-O2/(g-TSS x hour) at 20 oC		0.71
SOUR mg-O2/(g-VSS x hour) with nitrification at 20 oC		1.88
SOUR mg-O2/(g-TSS x hour) with nitrification at 20 oC		0.99
Total AOR (kgO2/day)		379
% denitrification		20%
Nutrients		
Nitrogen Released Due to Digestion (transformed to NH3) (kg/day)		17.76
Nitrogen Nitrified (Kg/day)		17.78
Nitrogen Denitrified (Kg/day)		3.86
Alkalinity in Feed (Kg/day)		87
Alkalinity Released Due to Digestion (Kg/day)		64
Alkalinity Lost Through Nitrification (Kg/day)		128
Alkalinity Produced Through Denitrification (Kg/day)		14
Alkalinity Discharged (Kg/day		37
Kinetic Limitation on Nitrification		
DO, mg/L		2
Maximum Specific Growth Rate (μ_{max}), Day^{-1} at Operational DO		0.3408
Ammonia in Digester Effluent Due to Kinetic Limitations		
	a	0.26
	b	-336.49
	c	5.84
Effluent Ammonia (mg-N/L) for Kinetic Limitation		0.02
Potential Nitrification Associated with Kinetics (Kg/day		17.78

Aerobic Biological Kinetics	
Parameter	**Temperature**
Heterotrophs	
Maximum Specific Growth Rate (μ_{max}), Day^{-1}	2.60
Half Saturation for Organics (K_s), mg BOD_5/L	3.13
Half Saturation for Organics (K_s), mg Bio COD/L	5.00
True Yield (Y_H), mg COD/mg COD (aerobic)	0.67
Decay Rate (b_H), Day^{-1}	0.22
Inactive Fraction (f_b)	0.19
Volatile Fraction, % of TSS	0.90
COD/VSS Ratio, mg COD/mg VSS	1.42
Nitrogen Content, N/VSS (%)	0.09
Phosphorus Content, P/VSS (%	0.03
Autotrophs	
Maximum Specific Growth Rate (μ_{max}), Day^{-1}	0.43
Half Saturation for NH_3-N (K_N), mg-N/L	0.49
Half Saturation for O_2 (K_O), mg-O_2/L	0.50
True Yield (Y_A), mg TSS/mg NH_3-N	0.15
True Yield (Y_A), mg COD/mg NH_3-N	0.19
Decay Rate (b_A), Day^{-1}	0.04
Volatile Fraction, % of TSS	0.90
COD/VSS Ratio, mg COD/mg VSS	1.42
Nitrogen Content, N/VSS (%)	0.09
Phosphorus Content, P/VSS (%	0.03
PAOs	
True Yield (Y_H), mg TSS/mg BOD_5	0.76
True Yield (Y_H), mg COD/mg COD	0.62
Decay Rate (b_H), Day^{-1}	0.04
Inactive Fraction (f_b)	0.19
Volatile Fraction, % of TSS	0.90
COD/VSS Ratio, mg COD/mg VSS	1.42
Nitrogen Content, N/VSS (%)	0.09
Phosphorus Content, P/VSS (%)	0.03
TSS Content of Poly-F	3.23

This document is the property of CH2M HILL, Inc.
The expression of the information contained in th
document is protected under U.S. copyright law.

Diurnal Peak Flow Conditions

Constituent	Influent	Effluent	
Flow (m3/day)	179	179	
Carbonaceous BOD5 (kg/day	397	126	
Particulate	138	73	
Heterotrophs	189	38	
PAOs	70	15	
PHA	0	0	
Filtrate	0	0	
COD (kg/day)	1,176	728	
Particulate Bio	25	0	
Particulate Non-Bio	410	401	
Decay Prod Aer/Anx	203	136	
Decay Prod Anaerobic	0	0	
Heterotrophs	315	70	
Autotrophs	22	16	
PAOs	194	98	
PHA	0	0	
Soluble Bio	0	0	
VFA	0	0	
Colloidal Bio	0	0	
Soluble Non-Bio	8	8	
Colloidal Non-Bio	0	0	
TSS (kg/day)	1,432	966	
Biodegradable	20	0	
Non-Biodegradable	598	622	
Decay Prod Aer/Anx	159	106	
Decay Prod Anaerobic	0	0	
Metal Hydroxide	0	0	
Metal Phosphate	0	0	
Heterotrophs	246	54	
Autotrophs	17	12	
PAOs	152	77	
PHA	0	0	
Poly-P	240	95	
VSS (kg/day)	823	507	
Biodegradable	18	0	
Non-Biodegradable	289	282	
Decay Prod Aer/Anx	143	96	
Decay Prod Anaerobic	0	0	
Metal Hydroxide	0	0	
Heterotrophs	222	49	
Autotrophs	15	11	
PAOs	137	69	
PHA	0	0	
TKN (kg-N/day)	61	42	
NH_3-N (kg-N/day)	0	0	
Particulate Bio Org N	2	0	
Non-Bio Part Org N	16	22	
Decay Prod Aer/Anx	10	8	
Decay Prod Anaerobic	16	0	
Heterotrophs	19	4	
Autotrophs	1	1	
PAOs	12	6	
Non-Bio Soluble Org. N	0	1	
Non-Bio Colloidal Org. N	0	0	
Soluble Bio Org N	0	0	
Colloidal Bio Org N	0	0	
NO_3-N (kg-N/day)	2	23	
TP (kg-P/day)	93	83	
Bio Particulate	1	0	
Non-Bio Particulate	3	5	
Decay Prod Aer/Anx	4	3	
Decay Prod Anaerobic	0	0	
Metal Phosphate	0	0	
Heterotrophs	6	1	
Autotrophs	0	0	
PAOs	4	2	
Poly-P	74	29	
Ortho-PO_4	1	42	
Alkalinity (kg/day as CaCO3)	92	54	
H_2S (kg/day)	0	0	
BOD_5 (mg/L)	2,220	707	
COD (mg/L)	6,572	4,069	
TSS (mg/L)	8,000	5,399	
VSS (mg/L)	4,598	2,833	
TKN (mg-N/L)	340	234	
NH_3-N (mg-N/L)	1	0	
NO_3-N (mg-N/L)	11	127	
TP (mg-P/L)	519	461	
Alkalinity (mg/L as CaCO3)	513	303	
H_2S (mg/L)	0	0	

This document is the property of CH2M HILL, Inc.
The expression of the information contained in th
document is protected under U.S. copyright law.

Model Results Summary for Alternative 3, Plant 3 Conventional WWTP

Projected 2028 Average Daily Flow = 1,056 m^3/day

Projected 2028 Maximum Month Flow = 1,479 m^3/day

Estimated Equipment Sizing:

- 3 process reactors at 1,249 m^3 each
- 2 circular clarifiers at 7 m diameter each
- 3,554 m^3 total aerobic digester volume

Use Instructions: See Comment in this cell.

Linked Model Input	Current Run:	Comments	Scenarios	Comments		Comments		Comments		Comments
Flow (m3/day)	1,479	MM	1,479	MM	1,479	MM	1,056	AD Flow	1,109	75% of MM
Diurnal Flow Peaking Factor	1.43	MxD:MM	1.43	MxD:MM	1.43	MxD:MM	2	MxD:AD	1.43	Same as MxD:MM
CBOD5 (kg/day)	1,182	MM loading	1,182	MM loading	1,182	MM loading	844	AD Loading	887	75% of MM
TSS (kg/day)	1,330	MM loading	1,330	MM loading	1,330	MM loading	950	AD Loading	997	75% of MM
% VS	75%		75%		75%		75%		75%	
TKN (kg/day)	222	MM loading	222	MM loading	222	MM loading	158	AD Loading	166	75% of MM
Ammonia -N (kg/day)	133	MM loading	133	MM loading	133	MM loading	95	AD Loading	100	75% of MM
Total Phosphate - P (kg/day)	37	MM loading	37	MM loading	37	MM loading	26	AD Loading	28	75% of MM
Alkalinity (kg/day)	1478	Assumed at 1000 mg/L	1478	Assumed at 1000 mg/L	1478	Assumed at 1000 mg/L	1055	Assumed at 1000 mg/L	1108	Assumed at 1000 mg/L
Hydrogen Sulfide (kg/day)	35	Assumed at 24 mg/L	35	Assumed at 24 mg/L	35	Assumed at 24 mg/L	25	Assumed at 24 mg/L	27	Assumed at 24 mg/L
Number of Aeration Basin Trains Online	3		3		3		3		3	
Volume per Train (m3)	1,249		1,249		1,249		1,249		1,249	
Total Aeration Basin Volume in Service (m3)	3,748		3,748		3,748		3,748		3,748	
SRT	10		10		10		10		10	
System pH	7.2		7.2		7.2		7.2		7.2	
Temperature °C	14	Minimum Month	14	Minimum Month	24.6	Maximum month	16.8	Annual average	14	Minimum Month
Nitrified Recycle Rate (% of Aer Basin influent flow)	615%		615%		615%		615%		615%	
Number of Secondary Clarifiers Online	2		2		2		2		2	
Surface Area per Secondary Clarifier (sq m)	41		41		41		41		41	
Total Secondary Clarifier Area (sq m)	82		82		82		82		82	
Secondary Clarifier Diameter (m)	7		7		7		7		7	
SVI (mL/g)	150		150		150		150		150	
Average Secondary Effluent TSS (mg/L)	15	Fixed	15	Fixed	15	Fixed	15	Fixed	15	Fixed
Peak Secondary Effluent TSS (mg/L)	20	Fixed	20	Fixed	20	Fixed	20	Fixed	20	Fixed
Average RAS Underflow Rate (% of Inf Q)	45.8%	Calculated	45.8%	Calculated	45.8%	Calculated	44.0%	Calculated	44.3%	Calculated
Peak RAS Underflow Rate (% of Inf Q)	63.7%	Calculated	63.7%	Calculated	63.3%	Calculated	46.3%	Calculated	62.0%	Calculated
Thickener Solids Capture (%)	85%		85%		85%		85%		85%	
Thickened Sludge Concentration (mg/L)	20,000		20,000		20,000		20,000		20,000	
AerDig1 Volume (m3)	3,554		3,554		3,554		3,554		3,554	
AerDig1 Temperature (°C)	14	Minimum Month	14	Minimum Month	24.6	Maximum month	16.8	Annual average	14	Minimum Month
AerDig1 DO (mg/L)	2		2		2		2		2	
AerDig1 % Denitrification	20%		20%		20%		20%		20%	
Dewatering Solids Capture (%)	95%		95%		95%		95%		95%	
Dewatered Sludge Concentration (%)	20%		20%		20%		20%		20%	
Results										
SRT	10.0		10.0		10.0		10.0		10.0	
Final Anoxic Zone NO3	0.13	want < 0.5	0.13	want < 0.5	0.06	want < 0.5	0.09	want < 0.5	0.12	want < 0.5
Secondary Effluent TSS (mg/L)	15.0	want < 60 (goal = 42)	15.0	want < 60 (goal = 42)	15.0	want < 60 (goal = 42)	15.0	want < 60 (goal = 42)	15.0	want < 60 (goal = 42)
Secondary Effluent CBOD5 (mg/L)	4.71	want < 60 (goal = 42)	4.71	want < 60 (goal = 42)	4.01	want < 60 (goal = 42)	4.45	want < 60 (goal = 42)	4.62	want < 60 (goal = 42)
Secondary Effluent COD (mg/L)	60.29	want < 150, (goal = 105.0)	60.29	want < 150, (goal = 105.0)	59.42	want < 150, (goal = 105.0)	59.96	want < 150, (goal = 105.0)	60.14	want < 150, (goal = 105.0)
Secondary Effluent TN (mg/L)	16.19	want < 70, (goal = 49.0)	16.19	want < 70, (goal = 49.0)	16.08	want < 70, (goal = 49.0)	15.70	want < 70, (goal = 49.0)	15.85	want < 70, (goal = 49.0)
Secondary Effluent NH3-N (mg/L)	0.15		0.15		0.08		0.10		0.16	
Secondary Effluent NO3-N (mg/L)	12.53	want < 18 (goal is 12.6)	12.53	want < 18 (goal is 12.6)	12.54	want < 18 (goal is 12.6)	12.11	want < 18 (goal is 12.6)	12.18	want < 18 (goal is 12.6)
Secondary Effluent TP (mg/L)	11.34	want < 15 (goal = 10.5)	11.35	want < 15 (goal = 10.5)	7.03	want < 15 (goal = 10.5)	12.01	want < 15 (goal = 10.5)	12.38	want < 15 (goal = 10.5)
Influent COD (mg/L)	1,569	~1320 mg/L per ops data	1,569	~1320 mg/L per ops data	1,569	~1320 mg/L per ops data	1,569	~1320 mg/L per ops data	1,569	~1320 mg/L per ops data
Corresponding Average MLSS (mg/L)	3,309	want < 3400 at MM	3,309	want < 3400 at MM	3,368	want < 3400 at MM	2,397	want < 3400 at MM	2,506	want < 3400 at MM
Secondary Influent MLSS (mg/L)	3,290		3,290		3,351		2,380		2,488	
Nitrified Recycle Rate (m3/day)	9,926		9,926		9,925		7,373		7,690	
Solids Loading Rate To Secondary Clarifiers (kg/day-sq m)	94.73		94.72		96.46		50.26		54.93	
RAS Rate (m3/day)	740		739		739		527		554	
Corresponding WAS (kg/day)	1,217.94		1,218.10		1,240.15		882.63		922.46	
Combined Thickened Feed Sludge to Aerobic Dig. (kg/day)	1,035		1,035		1,054		750		784	
Digester Volatile Solids Loading Rate (kg/day-m3)	0.17		0.17		0.16		0.12		0.13	
Digester SRT	68.66		68.65		67.43		94.75		90.66	
Model Prediction of VS Destruction (combined)	44.74%		44.74%		42.75%		45.89%		46.13%	
Digester Alkalinity Limited?	yes		yes		yes		yes		yes	
SOUR in Digester (mg O2/hour/gram TS)	0.36	want < 1.5 at 20 C, goal = 1.13	0.36	want < 1.5 at 20 C, goal = 1.13	0.33	want < 1.5 at 20 C, goal = 1.13	0.27	want < 1.5 at 20 C, goal = 1.13	0.29	want < 1.5 at 20 C, goal = 1.13
Dewatered Solids From Plant (kg/day)	597.51		597.64		601.06		414.48		437.82	
PBNR AOR (kg/day)	1,800		1,800		1,868		1,298		1,348	
PBNR SOR (kg/day)	5,241		5,241		6,242		3,557		3,612	
PBNR Total Required Air Rate in Zones 3-5 (N*m3/hr)	2,516		2,516		3,066		1,837		1,822	

This document is the property of CH2M HILL, Inc.
The expression of the information contained in this
document is protected under U.S. copyright law.

Stoichiometric Parameters		Value	Default	Units
Hydrolysis of Particulate Substrate: X_S				
Production of Soluble Inert COD: S_I	f_{SI}	0.00		g COD/g COD
Heterotrophic Organisms: X_H				
Yield	Y_H	0.6660		g COD/g COD
Fraction of Lysis Inerts	f_{XI}	0.08		g COD/g COD
Phosphorus Accumulating Organisms: X_{PAO}				
Yield (biomass/PHA)	Y_{PAO}	0.6250		g COD/g COD
Phosphate release per PHA Store	Y_{PO4}	0.40		g P/g COD
PHA requirement for PP storage	Y_{PHA}	0.20		g COD/g P
Fraction of Lysis Inerts	f_{XI}	0.08		g COD/g COD
Autotrophic Organisms: X_{AUT}				
Yield per NO_3-N	Y_A	0.19		g COD/g N
Fraction of Lysis Inerts	f_{XI}	0.08		g COD/g COD
Methanol Degraders-Population 1: X_{M1}				
Yield per MeOH COD	Y_{M1}	0.58		g COD/g COD
Fraction of Lysis Inerts	f_{XI}	0.10		g COD/g COD
Methanol Degraders-Population 2: X_{M2}				
Yield per MeOH COD	Y_{M2}	0.36		g COD/g COD
Fraction of Lysis Inerts	f_{XI}	0.10		g COD/g COD

Conversion Factors for Conservation Equatio		Value	Default	Units
Nitrogen Content of:	Check Delta	0.00		
Soluble Inert COD: S_I	i_{NSI}	0.0600	0.01	g N/g COD
Fermentable Substrate: S_F	i_{NSF}	0.0393	0.03	g N/g COD
Inert Particulate COD: X_I	i_{NXI}	0.0402	0.02	g N/g COD
Slowly Biodegradable Substrate: X_S	i_{NXS}	0.0393	0.04	g N/g COD
Biomass: X_H, X_{PAO}, X_{AUT}, X_{m1}, X_{m2}	i_{NBM}	0.0606	0.07	g N/g COD
Decay Products:, $X_{d,aa}$	i_{NXdaa}	0.0606	0.02	g N/g COD
Phosphorus Content of:	Check Delta	0.00		
Soluble Inert COD: S_I	i_{PSI}	0.0000	0.00	g P/g COD
Fermentable Substrate: S_F	i_{PSF}	0.0000	0.01	g P/g COD
Inert Particulate COD: X_I	i_{PXI}	0.0073	0.01	g P/g COD
Slowly Biodegradable Substrate: X_S	i_{PXS}	0.0053	0.01	g P/g COD
Biomass: X_H, X_{PAO}, X_{AUT}	i_{PBM}	0.0200	0.02	g P/g COD
Decay Products:, $X_{d,aa}$	i_{PXdaa}	0.0200	1.02	g P/g COD
TSS to COD Ratio for:				
Inert Particulate COD: X_I	i_{TSSXI}	0.7825	0.75	g TSS/g COD
Slowly Biodegradable Substrate: X_S	i_{TSSXS}	0.7825	0.75	g TSS/g COD
Biomass: X_H, X_{PAO}, X_{AUT}, X_{m1}, X_{m2}	i_{TSSBM}	0.7825	0.90	g TSS/g COD
Decay Products: $X_{d,aa}$	$i_{TSSXdaa}$	0.7825	0.75	g TSS/g COD

Nitrogen Ratio Adjustment			Ratio
Fermentable Substrate: S_F	i_{NSF}	0.0393	
Slowly Biodegradable Substrate: X_S	i_{NXS}	0.0393	1.00
Alternate Nitrogen Ratio			
Fermentable Substrate: S_F	i_{NSF}	0.0536	
Slowly Biodegradable Substrate: X_S	i_{NXS}	0.0357	1.50

Kinetic Parameters		Unit	Typical Values 20 °C	Typical Values 10 °C	Temperature 14.0 deg. C
Hydrolysis of Particulate Substrate: X_S					
k_h	(Hydrolysis Rate)	1/day	3.00	2.00	2.35
n_{NO3}	(Anoxic Reduction Factor)		0.60	0.60	0.60
n_{fe}	(Anaerobic Reduction Factor)		0.40	0.40	0.40
K_{O2}	(Oxygen Inhibition)	g O_2/m^3	0.20	0.20	0.20
K_{NO3}	(Nitrate Inhibition)	g N/m^3	0.50	0.50	0.50
K_X	(Particulate Inhibition)	g COD/g COD	0.10	0.10	0.10
Hydrolysis of Decay Products: X_{daa}					
K_{hdaa}	(Hydrolysis Rate)	1/d	1.20		0.94
K_{O2Ydaa}	(Oxygen Inhibition)	g O_2/m^3	0.10		0.10
$K_{NO3Ydaa}$	(Nitrate Inhibition)	g N/m^3	0.10		0.10
K_{Xdaa}	(Particulate Inhibition)	g X_{daa}/g X_H	0.10		0.10
Heterotrophic Organisms: X_H					
μ_H	(Max Growth Rate)	1/day	6.00	3.00	2.60
q_{fe}	(Max Fermentation Rate)	g COD/(g COD*d)	3.00	1.50	1.98
n_{NO3}	(Anoxic Reduction Factor)		0.80	0.80	0.80
b_H	(Decay Rate)	1/day	0.40	0.20	0.50
K_{O2}	(Oxygen Inhibition)	g O_2/m^3	0.20	0.20	0.20
K_F	(Growth on S_F)	g COD/m^3	4.00	4.00	2.00
K_{fe}	(Fermentation of S_F)	g COD/m^3	4.00	4.00	4.00
K_A	(Growth on S_A)	g COD/m^3	4.00	4.00	2.00
K_{NO3}	(Anoxic Growth)	g N/m^3	0.50	0.50	0.50
K_{NH4}	(Nitrogen Inhibition)	g N/m^3	0.05	0.05	0.05
K_P	(Phosphorus Inhibition)	g P/m^3	0.01	0.01	0.01
K_{ALK}	(Alkalininty Inhibition)	mole HCO_3^-/m^3	0.10	0.10	0.10
Phosphorus Accumulating Organisms: X_{PAO}					
q_{PHA}	(X_{PHA} Storage Rate)	g X_{PHA}/(g X_{PAO}*d)	3.00	2.00	6.00
q_{PP}	(X_{PP} Storage Rate)	g X_{PP}/(g X_{PAO}*d)	1.50	1.00	1.18
μ_{PAO}	(Max Growth Rate)	1/day	1.00	0.67	0.79
n_{NO3}	(Anoxic Reduction Factor)		0.60	0.60	0.60
b_{PAO}	(X_{PAO} Decay Rate)	1/day	0.20	0.10	0.10
b_{PP}	(X_{PP} Decay Rate)	1/day	0.20	0.10	0.10
b_{PHA}	(X_{PHA} Decay Rate)	1/day	0.20	0.10	0.10
K_{O2}	(Oxygen Inhibition)	g O_2/m^3	0.20	0.20	0.20
K_{NO3}	(Anoxic Growth)	g N/m^3	0.50	0.50	0.50
K_A	(Growth on S_A)	g COD/m^3	4.00	4.00	2.00
K_{NH4}	(Nitrogen Inhibition)	g N/m^3	0.05	0.05	0.0050
K_{PS}	(Phosphorus Inhibition of PP)	g P/m^3	0.20	0.20	0.20
K_P	(Phosphorus Inhibition of Growth)	g P/m^3	0.01	0.01	0.0050
K_{ALK}	(Alkalininty Inhibition)	mole HCO_3^-/m^3	0.10	0.10	0.10
K_{PP}	(Polyphosphate Inhibition)	g X_{PP}/g X_{PAO}	0.01	0.01	0.02
K_{MAX}	(Max Ratio of X_{PP}/X_{PAO})	g X_{PP}/g X_{PAO}	0.34	0.34	0.34
K_{IPP}	(Inhibition of PP Storage)	g X_{PP}/g X_{PAO}	0.02	0.02	0.02
K_{PHA}	(Saturation for PHA)	g X_{PHA}/g X_{PAO}	0.01	0.01	0.01
Autotrophic Organisms: X_{AUT}					
μ_{AUT}	(Maximum Growth Rate)	1/day	1.00	0.35	0.42
b_{AUT}	(Decay Rate)	1/day	0.15	0.05	0.04
K_{O2}	(Oxygen Inhibition)	g O_2/m_3	0.50	0.50	0.50
K_{NH4}	(Nitrogen Inhibition: SUBSTRATE)	g N/m^3	1.00	1.00	0.49
K_{ALK}	(Alkalininty Inhibition)	mole HCO_3^-/m^3	0.50	0.50	0.01
K_P	(Phosphorus Inhibition of Growth)	g P/m^3	0.01	0.01	0.0050
Precipitation					
k_{PRE}	(Rate of Phosphorus Precipitation)	m^3/(g $Me(OH)_3$*d)	1.00	1.00	2.00
k_{RED}	(Rate of Phosphous Redissolution)	1/day	0.60	0.60	0.10
K_{ALK}	(Alkalininty Inhibition)	mole HCO_3^-/m^3	0.50	0.50	0.50
Methanol Degrading Organisms - Population 1					
μ_{M1}	(Maximum Growth Rate)	1/day	3.88		7.00
n_{NO3M1}	(Anoxic Reduction Factor)		0.21		0.20
b_{M1}	(Decay Rate)	1/day	0.18		0.20
K_{O2M1}	(Oxygen Inhibition)	g O_2/m^3	0.20		0.50
K_{M1}	(Growth on Methanol)	g COD/m^3	4.00		4.00
K_{NO3M1}	(Anoxic Growth)	g N/m^3	0.50	0.50	0.80
K_{NH4M1}	(Nitrogen Inhibition)	g N/m^3	0.05		0.05
K_{ALKM1}	(Alkalinity Inhibition)	mole HCO_3^-/m^3	0.10		0.10
K_{PM1}	(Phosphorus Inhibition)	g P/m^3	0.01		0.01
Methanol Degrading Organisms - Population 2					
μ_{M2}	(Maximum Growth Rate)	1/day	1.72		7.00
n_{NO3M2}	(Anoxic Reduction Factor)		0.76		0.80
b_{M2}	(Decay Rate)	1/day	0.25		0.25
K_{O2M2}	(Oxygen Inhibition)	g O_2/m^3	0.20		0.50
K_{M2}	(Growth on Methanol)	g COD/m^3	4.00		1.00
K_{NO3M2}	(Anoxic Growth)	g N/m^3	0.50	0.50	0.50
K_{NH4M2}	(Nitrogen Inhibition)	g N/m^3	0.05		0.05
K_{ALKM2}	(Alkalinity Inhibition)	mole HCO_3^-/m^3	0.10		0.10
K_{PM2}	(Phosphorus Inhibition)	g P/m^3	0.01		0.01

This document is the property of CH2M HILL, Inc.
The expression of the information contained in thi
document is protected under U.S. copyright law.

Mass Balance for Average Flow Conditions

Constituent	Raw Wastewater (RW)	Main Recycle Influent (RecyI)	Main Recycled Stream (Recycle)	Main Combined Recycle Effluent (RecyE)	Main Bioreactor Influent (BI)	Main Secondary Clarifier Influent (SI)	Main Secondary Clarifier Effluent (SE)	Plant Effluent (PLE)	Main WAS	GBT WAS Thickener Influent (TWASI)	GBT Thickened WAS (TWAS)	AerDig1 Aerobic Digester Influent (ADI)	AerDig1 Aerobic Digester Effluent (ADE)	BFP Dewatering Influent (DWI)	BFP Dewatered Sludge (DWE)	Biosolids to Dispoal	GBT WAS Thickening Recycle (TWASR)	BFP Dewatering Recycle (DWR)	Recy Combined Discharge	Ender
Flow (m3/day)	1,479	1,479	136	1,614	1,614	2,354	1,476	1,476	139	139	52	52	52	52	3	3	87	49	136	
Carbonaceous BOD_5 (kg/day)	1,183	1,183	55	1,237	1,237	2,156	7	7	339	339	288	288	79	79	75	75	51	4	55	
COD (kg/day)	2,320	2,320	180	2,500	2,500	6,482	89	89	1,008	1,008	854	854	473	473	447	447	154	26	180	
TSS (kg/day)	1,331	1,331	214	1,545	1,545	7,744	22	22	1,218	1,218	1,035	1,035	629	629	598	598	183	31	214	
VSS (kg/day)	998	998	122	1,121	1,121	4,485	13	13	705	705	600	600	331	331	315	315	106	17	122	
TKN (kg-N/day)	222	222	13	235	235	345	5	5	54	54	45	45	32	32	27	27	8	5	13	
NH_3-N (kg-N/day)	133	133	4	137	137	0	0	0	0	0	0	0	4	4	0	0	0	4	4	
NO_X-N (kg-N/day)	0	0	15	15	15	29	18	18	2	2	1	1	15	15	1	1	1	14	15	
TP (kg-P/day)	37	37	49	86	86	458	17	17	70	70	58	58	58	58	20	20	11	38	49	
Alkalinity (kg/day as $CaCO_3$)	1,478	1,478	62	1,540	1,540	1,681	1,053	1,053	99	99	37	37	0	0	0	0	62	0	62	
H_2S (kg/day)	35	35	0	35	35	0	0	0	0	0	0	0	0	0	0	0	0	0	0	
BOD_5 (mg/L)	800	800	405	767	767	916	5	5	2,447	2,447	5,566	5,566	1,525	1,525	25,102	25,102	586	81	405	
COD (mg/L)	1,569	1,569	1,330	1,549	1,549	2,754	60	60	7,278	7,278	16,496	16,496	9,136	9,136	149,648	149,648	1,779	529	1,330	
TSS (mg/L)	900	900	1,580	957	957	3,290	15	15	8,791	8,791	20,000	20,000	12,151	12,151	200,000	200,000	2,105	645	1,580	
VSS (mg/L)	675	675	903	694	694	1,905	9	9	5,092	5,092	11,583	11,583	6,401	6,401	105,353	105,353	1,219	340	903	
TKN (mg-N/L)	150	150	99	146	146	147	4	4	387	387	876	876	614	614	8,889	8,889	95	107	99	
NH_3-N (mg-N/L)	90	90	27	85	85	0	0	0	0	0	0	0	76	76	76	76	0	76	27	
NO_3-N (mg-N/L)	0	0	111	9	9	13	13	13	13	13	13	13	287	287	287	287	13	287	111	
TP (mg-P/L)	25	25	365	53	53	194	11	11	502	502	1,129	1,129	1,129	1,129	6,733	6,733	128	785	365	
Alkalinity (mg/L as CaCO3)	999	999	457	954	954	714	714	714	714	714	714	714	0	0	0	0	714	0	457	
H_2S (mg/L)	24	24	0	22	22	0	0	0	0	0	0	0	0	0	0	0	0	0	0	

Mass Balance for Diurnal Peak Flow Conditions

Constituent	Raw Wastewater (RW)	Main Recycle Influent (RecyI)	Main Recycled Stream (Recycle)	Main Combined Recycle Effluent (RecyE)	Main Bioreactor Influent (BI)	Main Secondary Clarifier Influent (SI)	Main Secondary Clarifier Effluent (SE)		Main WAS	GBT WAS Thickener Influent (TWASI)	GBT Thickened WAS (TWAS)	AerDig1 Aerobic Digester Influent (ADI)	AerDig1 Aerobic Digester Effluent (ADE)	BFP Dewatering Influent (DWI)	BFP Dewatered Sludge (DWE)		GBT WAS Thickening Recycle (TWASR)	BFP Dewatering Recycle (DWR)	Recy Combined Discharge	
Flow (m3/day)	2,114	2,114	206	2,320	2,320	3,799	2,110	2,110	210	210	76	76	76	76	4	4	134	72	206	
Carbonaceous BOD_5 (kg/day)	1,537	1,537	81	1,618	1,618	2,615	8	8	325	325	424	424	116	116	110	110	75	6	81	
COD (kg/day)	3,015	3,015	264	3,279	3,279	11,965	126	126	1,475	1,475	1,249	1,249	695	695	657	657	226	38	264	
TSS (kg/day)	1,729	1,729	315	2,043	2,043	14,402	42	42	1,789	1,789	1,520	1,520	924	924	878	878	268	46	315	
VSS (kg/day)	1,297	1,297	179	1,476	1,476	8,310	24	24	1,032	1,032	877	877	487	487	462	462	155	24	179	
TKN (kg/day)	288	288	23	311	311	622	10	10	76	76	64	64	47	47	39	39	12	8	23	
NH_3-N (kg-N/day)	173	173	6	178	178	4	2	2	0	0	0	0	6	6	0	0	0	5	6	
NO_3-N (kg-N/day)	0	0	22	22	22	43	24	24	2	2	1	1	22	22	1	1	2	21	22	
TP (kg-P/day)	48	48	74	121	121	920	8	8	114	114	96	96	86	86	30	30	17	56	74	
Alkalinity (kg/day as $CaCO_3$)	1,921	1,921	67	1,988	1,988	1,904	1,058	1,058	105	105	38	38	0	0	0	0	67	0	67	
H_2S (kg/day)	46	46	0	46	46	0	0	0	0	0	0	0	0	0	0	0	0	0	0	
BOD_5 (mg/L)	727	727	392	697	697	688	4	4	1,544	1,544	5,578	5,578	1,525	1,525	25,102	25,102	557	81	392	
COD (mg/L)	1,426	1,426	1,280	1,413	1,413	3,150	60	60	7,010	7,010	16,431	16,431	9,136	9,136	149,648	149,648	1,680	529	1,280	
TSS (mg/L)	818	818	1,527	881	881	3,791	20	20	8,502	8,502	20,000	20,000	12,151	12,151	200,000	200,000	1,997	645	1,527	
VSS (mg/L)	613	613	870	636	636	2,187	12	12	4,906	4,906	11,541	11,541	6,401	6,401	105,353	105,353	1,152	340	870	
TKN (mg-N/L)	136	136	110	134	134	164	5	5	363	363	848	848	614	614	8,889	8,889	88	107	110	
NH_3-N (mg-N/L)	82	82	27	77	77	1	1	1	1	1	1	1	76	76	76	76	1	76	27	
NO_3-N (mg-N/L)	0	0	107	10	10	11	11	11	11	11	11	11	287	287	287	287	11	287	107	
TP (mg-P/L)	0	23	357	52	52	242	4	4	540	540	1,267	1,267	1,129	1,129	6,733	6,733	129	785	357	
Alkalinity (mg/L as CaCO3)	908	908	327	857	857	501	501	501	501	501	501	501	0	0	0	0	501	0	327	
H_2S (mg/L)	22	22	0	20	20	0	0	0	0	0	0	0	0	0	0	0	0	0	0	

This document is the property of CH2M HILL, Inc.
The expression of the information contained in this
document is protected under U.S. copyright law.

AerDig1

Aerobic Digester Module

Average Conditions

Constituent	Influent	Effluent
Flow (m3/day)	52	52
Carbonaceous BOD_5 (kg/day	288	79
Particulate	30	61
Heterotrophs	204	12
PAOs	54	6
PHA	0	0
Filtrate	0	0
COD (kg/day)	854	473
Particulate Bio	21	0
Particulate Non-Bio	292	292
Decay Prod Aer/Anx	28	113
Decay Prod Anaerobic	0	0
Heterotrophs	340	22
Autotrophs	22	6
PAOs	149	38
PHA	0	0
Soluble Bio	0	0
VFA	0	0
Colloidal Bio	0	0
Soluble Non-Bio	2	2
Colloidal Non-Bio	0	0
TSS (kg/day)	1,035	629
Biodegradable	16	0
Non-Biodegradable	452	452
Decay Prod Aer/Anx	22	88
Decay Prod Anaerobic	0	0
Metal Hydroxide	0	0
Metal Phosphate	0	0
Heterotrophs	266	17
Autotrophs	17	5
PAOs	117	29
PHA	0	0
Poly-P	145	37
VSS (kg/day)	600	331
Biodegradable	15	0
Non-Biodegradable	205	205
Decay Prod Aer/Anx	20	79
Decay Prod Anaerobic	0	0
Metal Hydroxide	0	0
Heterotrophs	239	16
Autotrophs	16	4
PAOs	105	27
PHA	0	0
TKN (kg-N/day)	45	32
NH_3-N (kg-N/day)	0	4
Particulate Bio Org N	1	0
Non-Bio Part Org N	12	17
Decay Prod Aer/Anx	2	7
Decay Prod Anaerobic	0	0
Heterotrophs	21	1
Autotrophs	1	0
PAOs	9	2
Non-Bio Soluble Org. N	0	0
Non-Bio Colloidal Org. N	0	0
Soluble Bio Org N	0	0
Colloidal Bio Org N	0	0
NO_3-N (kg-N/day)	1	15
TP (kg-P/day)	58	58
Bio Particulate	0	0
Non-Bio Particulate	2	4
Decay Prod Aer/Anx	1	2
Decay Prod Anaerobic	0	0
Metal Phosphate	0	0
Heterotrophs	7	0
Autotrophs	0	0
PAOs	3	1
Poly-P	45	11
Ortho-PO_4	1	40
Alkalinity (kg/day as $CaCO_3$)	37	0
H_2S (kg/day)	0	0
BOD_5 (mg/L)	5,566	1,525
COD (mg/L)	16,496	9,136
TSS (mg/L)	20,000	12,151
VSS (mg/L)	11,583	6,401
TKN (mg-N/L)	876	614
NH_3-N (mg-N/L)	0	76
NO_3-N (mg-N/L)	13	287
TP (mg-P/L)	1,129	1,129
Alkalinity (mg/L as CaCO3)	714	0
H_2S (mg/L)	0	0

Constituent	Influent	Effluent
Flow (m3/day)	52	52
Carbonaceous BOD_5 (kg/day)	288	79
Particulate	30	61
Heterotrophs	204	12
PAOs	54	6
PHA	0	0
Filtrate	0	0
COD (kg/day)	854	473
Particulate Bio	21	0
Particulate Non-Bio	292	292
Decay Prod Aer/Anx	28	113
Decay Prod Anaerobic	0	0
Heterotrophs	340	22
Autotrophs	22	6
PAOs	149	38
PHA	0	0
Soluble Bio	0	0
VFA	0	0
Colloidal Bio	0	0
Soluble Non-Bio	2	2
Colloidal Non-Bio	0	0
TSS (kg/day)	1,035	629
Biodegradable	16	0
Non-Biodegradable	452	452
Decay Prod Aer/Anx	22	88
Decay Prod Anaerobic	0	0
Metal Hydroxide	0	0
Metal Phosphate	0	0
Heterotrophs	266	17
Autotrophs	17	5
PAOs	117	29
PHA	0	0
Poly-P	145	37
VSS (kg/day)	600	331
Biodegradable	15	0
Non-Biodegradable	205	205
Decay Prod Aer/Anx	20	79
Decay Prod Anaerobic	0	0
Metal Hydroxide	0	0
Heterotrophs	239	16
Autotrophs	16	4
PAOs	105	27
PHA	0	0
TKN (kg-N/day)	45	32
NH_3-N (kg-N/day)	0	4
Particulate Bio Org N	1	0
Non-Bio Part Org N	12	17
Decay Prod Aer/Anx	2	7
Decay Prod Anaerobic	0	0
Heterotrophs	21	1
Autotrophs	1	0
PAOs	9	2
Non-Bio Soluble Org. N	0	0
Non-Bio Colloidal Org. N	0	0
Soluble Bio Org N	0	0
Colloidal Bio Org N	0	0
NO_3-N (kg-N/day)	1	15
TP (kg-P/day)	58	58
Bio Particulate	0	0
Non-Bio Particulate	2	4
Decay Prod Aer/Anx	1	2
Decay Prod Anaerobic	0	0
Metal Phosphate	0	0
Heterotrophs	7	0
Autotrophs	0	0
PAOs	3	1
Poly-P	45	11
Ortho-PO_4	1	40
Alkalinity (kg/day as $CaCO_3$)	37	0
H_2S (kg/day)	0	0

This document is the property of CH2M HILL, Inc.
The expression of the information contained in thi
document is protected under U.S. copyright law.

Facility Operating Parameters		
Bioreactor Volume, m3		3,554.12
Minimum Valid SRT, days		3.00
SRT, Days		68.66
Temperature, oC		14
Volatile Solids Loading (kg VSS/m3-day)		0.17
Volatile Solids Reduction, %		44.74%
TSS Reduction %		39.25%
SOUR mg-O2/(g-VSS x hour) at 20 oC		0.69
SOUR mg-O2/(g-TSS x hour) at 20 oC		0.36
SOUR mg-O2/(g-VSS x hour) with nitrification at 20 oC		0.97
SOUR mg-O2/(g-TSS x hour) with nitrification at 20 oC		0.51
Total AOR (kgO2/day)		453
% denitrification		20%
Nutrients		
Nitrogen Released Due to Digestion (transformed to NH3) (kg/day)		21.84
Nitrogen Nitrified (Kg/day)		17.91
Nitrogen Denitrified (Kg/day)		3.71
Alkalinity in Feed (Kg/day)		37
Alkalinity Released Due to Digestion (Kg/day)		79
Alkalinity Lost Through Nitrification (Kg/day)		129
Alkalinity Produced Through Denitrification (Kg/day)		13
Alkalinity Discharged (Kg/day		0
Kinetic Limitation on Nitrification		
DO, mg/L		2
Maximum Specific Growth Rate (μ_{max}), Day^{-1} at Operational DO		0.3408
Ammonia in Digester Effluent Due to Kinetic Limitations		
	a	0.28
	b	-880.09
	c	12.30
Effluent Ammonia (mg-N/L) for Kinetic Limitation		0.01
Potential Nitrification Associated with Kinetics (Kg/day)		21.85

Aerobic Biological Kinetics	
Parameter	**Temperature**
Heterotrophs	
Maximum Specific Growth Rate (μ_{max}), Day^{-1}	2.60
Half Saturation for Organics (K_S), mg BOD_5/L	3.13
Half Saturation for Organics (K_S), mg Bio COD/L	5.00
True Yield (Y_H), mg COD/mg COD (aerobic)	0.67
Decay Rate (b_H), Day^{-1}	0.22
Inactive Fraction (f_D)	0.19
Volatile Fraction, % of TSS	0.90
COD/VSS Ratio, mg COD/mg VSS	1.42
Nitrogen Content, N/VSS (%)	0.09
Phosphorus Content, P/VSS (%	0.03
Autotrophs	
Maximum Specific Growth Rate (μ_{max}), Day^{-1}	0.43
Half Saturation for NH_3-N (K_N), mg-N/L	0.49
Half Saturation for O_2 (K_O), mg-O_2/L	0.50
True Yield (Y_A), mg TSS/mg NH_3-N	0.15
True Yield (Y_A), mg COD/mg NH_3-N	0.19
Decay Rate (b_A), Day^{-1}	0.04
Volatile Fraction, % of TSS	0.90
COD/VSS Ratio, mg COD/mg VSS	1.42
Nitrogen Content, N/VSS (%)	0.09
Phosphorus Content, P/VSS (%	0.03
PAOs	
True Yield (Y_H), mg TSS/mg BOD_5	0.76
True Yield (Y_H), mg COD/mg COD	0.62
Decay Rate (b_H), Day^{-1}	0.04
Inactive Fraction (f_D)	0.19
Volatile Fraction, % of TSS	0.90
COD/VSS Ratio, mg COD/mg VSS	1.42
Nitrogen Content, N/VSS (%)	0.09
Phosphorus Content, P/VSS (%)	0.03
TSS Content of Poly-F	3.23

This document is the property of CH2M HILL, Inc.
The expression of the information contained in th
document is protected under U.S. copyright law.

Diurnal Peak Flow Conditions

Constituent	Influent	Effluent	
Flow (m3/day)	76	76	
Carbonaceous BOD5 (kg/day	424	116	
Particulate	148	90	
Heterotrophs	203	18	
PAOs	73	9	
PHA	0	0	
Filtrate	0	0	
COD (kg/day)	1,249	695	
Particulate Bio	27	0	
Particulate Non-Bio	438	428	
Decay Prod Aer/Anx	218	166	
Decay Prod Anaerobic	0	0	
Heterotrophs	338	33	
Autotrophs	24	9	
PAOs	201	55	
PHA	0	0	
Soluble Bio	0	0	
VFA	0	0	
Colloidal Bio	0	0	
Soluble Non-Bio	3	4	
Colloidal Non-Bio	0	0	
TSS (kg/day)	1,520	924	
Biodegradable	21	0	
Non-Biodegradable	639	664	
Decay Prod Aer/Anx	171	130	
Decay Prod Anaerobic	0	0	
Metal Hydroxide	0	0	
Metal Phosphate	0	0	
Heterotrophs	265	25	
Autotrophs	19	7	
PAOs	157	43	
PHA	0	0	
Poly-P	249	54	
VSS (kg/day)	877	487	
Biodegradable	19	0	
Non-Biodegradable	308	302	
Decay Prod Aer/Anx	154	117	
Decay Prod Anaerobic	0	0	
Metal Hydroxide	0	0	
Heterotrophs	238	23	
Autotrophs	17	7	
PAOs	141	39	
PHA	0	0	
TKN (kg-N/day)	64	47	
NH_3-N (kg-N/day)	0	6	
Particulate Bio Org N	2	0	
Non-Bio Part Org N	18	25	
Decay Prod Aer/Anx	11	10	
Decay Prod Anaerobic	18	0	
Heterotrophs	20	2	
Autotrophs	1	1	
PAOs	12	3	
Non-Bio Soluble Org. N	0	0	
Non-Bio Colloidal Org. N	0	0	
Soluble Bio Org N	0	0	
Colloidal Bio Org N	0	0	
NO_3-N (kg-N/day)	1	22	
TP (kg-P/day)	96	86	
Bio Particulate	1	0	
Non-Bio Particulate	3	6	
Decay Prod Aer/Anx	4	3	
Decay Prod Anaerobic	0	0	
Metal Phosphate	0	0	
Heterotrophs	7	1	
Autotrophs	0	0	
PAOs	4	1	
Poly-P	77	17	
Ortho-PO_4	0	58	
Alkalinity (kg/day as CaCO3)	38	0	
H_2S (kg/day)	0	0	
BOD_5 (mg/L)	5,578	1,525	
COD (mg/L)	16,431	9,136	
TSS (mg/L)	20,000	12,151	
VSS (mg/L)	11,541	6,401	
TKN (mg-N/L)	848	614	
NH_3-N (mg-N/L)	1	76	
NO_3-N (mg-N/L)	11	287	
TP (mg-P/L)	1,267	1,129	
Alkalinity (mg/L as CaCO3)	501	0	
H_2S (mg/L)	0	0	

This document is the property of CH2M HILL, Inc.
The expression of the information contained in thi
document is protected under U.S. copyright law.

Model Results Summary for Alternative 4, Plant 1 Conventional WWTP

Projected 2028 Average Daily Flow = 3,506 m^3/day

Projected 2028 Maximum Month Flow = 4,907 m^3/day

Estimated Equipment Sizing:

- 3 process reactors at 4,126 m^3 each
- 2 circular clarifiers at 13 m diameter each
- 3,539 m^3 total aerobic digester volume

Use Instructions: See Comment in this coll.

Linked Model Input	Current Run:	Comments	Scenarios: Max Month (winter)	Comments	Max Month (summer)	Comments	Average Day	Comments	For Class 1 Reliability	Comments
Flow (m3/day)	4,907	MM	4,907	MM	4,907	MM	3,505	AD Flow	3,681	75% of MM
Diurnal Flow Peaking Factor	1.43	MxD:MM	1.43	MxD:MM	1.43	MxD:MM	2	MxD:AD	1.43	Same as MxD:MM
CBOD5 (kg/day)	3,924	MM loading	3,924	MM loading	3,924	MM loading	2,802	AD Loading	2,943	75% of MM
TSS (kg/day)	4,414	MM loading	4,414	MM loading	4,414	MM loading	3,153	AD Loading	3,310	75% of MM
% VS	75%		75%		75%		75%		75%	
TKN (kg/day)	736	MM loading	736	MM loading	736	MM loading	525	AD Loading	552	75% of MM
Ammonia -N (kg/day)	441	MM loading	441	MM loading	441	MM loading	315	AD Loading	331	75% of MM
Total Phosphate - P (kg/day)	122	MM loading	122	MM loading	122	MM loading	88	AD Loading	92	75% of MM
Alkalinity (kg/day)	4904	Assumed at 1000 mg/L	4904	Assumed at 1000 mg/L	4904	Assumed at 1000 mg/L	3503	Assumed at 1000 mg/L	3678	Assumed at 1000 mg/L
Hydrogen Sulfide (kg/day)	118	Assumed at 24 mg/L	118	Assumed at 24 mg/L	118	Assumed at 24 mg/L	84	Assumed at 24 mg/L	88	Assumed at 24 mg/L
Number of Aeration Basin Trains Online	3		3		3		3		3	
Volume per Train (m3)	4,126		4,126		4,126		4,126		4,126	
Total Aeration Basin Volume in Service (m3)	12,378		12,378		12,378		12,378		12,378	
SRT	10		10		10		10		10	
System pH	7.2		7.2		7.2		7.2		7.2	
Temperature °C	14	Minimum Month	14	Minimum Month	24.6	Maximum Month	16.8	Annual average	14	Minimum Month
Nitrified Recycle Rate (% of Aer Basin influent flow)	615%		615%		615%		615%		615%	
Number of Secondary Clarifiers Online	2		2		2		2		1	
Surface Area per Secondary Clarifier (sq m)	137		137		137		137		137	
Total Secondary Clarifier Area (sq m)	274		274		274		274		137	
Secondary Clarifier Diameter (m)	13		13		13		13		13	
SVI (mL/g)	150		150		150		150		150	
Average Secondary Effluent TSS (mg/L)	15	Fixed	15	Fixed	15	Fixed	15	Fixed	15	Fixed
Peak Secondary Effluent TSS (mg/L)	20	Fixed	20	Fixed	20	Fixed	20	Fixed	20	Fixed
Average RAS Underflow Rate (% of Inf Q)	45.8%	Calculated	45.8%	Calculated	45.8%	Calculated	44.1%	Calculated	44.4%	Calculated
Peak RAS Underflow Rate (% of Inf Q)	63.8%	Calculated	63.8%	Calculated	63.4%	Calculated	46.3%	Calculated	62.0%	Calculated
Thickener Solids Capture (%)	85%		85%		85%		85%		85%	
Thickened Sludge Concentration (mg/L)	30,000		30,000		30,000		30,000		30,000	
AerDig1 Volume (m3)	3,539		3,539		3,539		3,539		3,539	
AerDig1 Temperature (°C)	14	Minimum Month	14	Minimum Month	24.6	Maximum Month	16.8	Annual average	14	Minimum Month
AerDig1 DO (mg/L)	2		2		2		2		2	
AerDig1 % Denitrification	20%		20%		20%		20%		20%	
Dewatering Solids Capture (%)	95%		95%		95%		95%		95%	
Dewatered Sludge Concentration (%)	20%		20%		20%		20%		20%	
Results										
SRT	10.0		10.0		10.0		10.0		10.0	
Final Anoxic Zone NO3	0.12	want < 0.5	0.12	want < 0.5	0.05	want < 0.5	0.08	want < 0.5	0.11	want < 0.5
Secondary Effluent TSS (mg/L)	15.0	want < 60 (goal = 42)	15.0	want < 60 (goal = 42)	15.0	want < 60 (goal = 42)	15.0	want < 60 (goal = 42)	15.0	want < 60 (goal = 42)
Secondary Effluent CBOD5 (mg/L)	4.70	want < 60 (goal = 42)	4.69	want < 60 (goal = 42)	4.15	want < 60 (goal = 42)	4.45	want < 60 (goal = 42)	4.61	want < 60 (goal = 42)
Secondary Effluent COD (mg/L)	60.3	want < 150, (goal = 105.0)	60.3	want < 150, (goal = 105.0)	59.8	want < 150, (goal = 105.0)	60.0	want < 150, (goal = 105.0)	60.1	want < 150, (goal = 105.0)
Secondary Effluent TN (mg/L)	16.2	want < 70, (goal = 49.0)	16.2	want < 70, (goal = 49.0)	16.1	want < 70, (goal = 49.0)	15.7	want < 70, (goal = 49.0)	15.9	want < 70, (goal = 49.0)
Secondary Effluent NH3-N (mg/L)	0.15		0.15		0.08		0.09		0.15	
Secondary Effluent NO3-N (mg/L)	12.55	want < 18 (goal is 12.6)	12.55	want < 18 (goal is 12.6)	12.58	want < 18 (goal is 12.6)	12.16	want < 18 (goal is 12.6)	12.22	want < 18 (goal is 12.6)
Secondary Effluent TP (mg/L)	5.10	want < 15 (goal = 10.5)	5.11	want < 15 (goal = 10.5)	1.90	want < 15 (goal = 10.5)	5.35	want < 15 (goal = 10.5)	6.38	want < 15 (goal = 10.5)
Influent COD (mg/L)	1,568	~1320 mg/L per ops data	1,568	~1320 mg/L per ops data	1,568	~1320 mg/L per ops data	1,568	~1320 mg/L per ops data	1,569	~1320 mg/L per ops data
Corresponding Average MLSS (mg/L)	3,340	want < 3400 at MM	3,341	want < 3400 at MM	3,299	want < 3400 at MM	2,418	want < 3400 at MM	2,528	want < 3400 at MM
Secondary Influent MLSS (mg/L)	3,321		3,322		3,278		2,402		2,511	
Nitrified Recycle Rate (m3/day)	32,923		32,921		32,924		24,450		25,507	
Solids Loading Rate To Secondary Clarifiers (kg/day-sq m)	94.64		94.63		93.38		50.18		109.72	
RAS Rate (m3/day)	2,455		2,453		2,453		1,750		1,840	
Corresponding WAS (kg/day)	4,061		4,062		4,010		2,941		3,074	
Combined Thickened Feed Sludge to Aerobic Dig. (kg/day)	3,452		3,452		3,408		2,500		2,613	
Digester Volatile Solids Loading Rate (kg/day-m3)	0.56		0.56		0.53		0.40		0.42	
Digester SRT	30.76		30.75		31.15		42.47		40.63	
Model Prediction of VS Destruction (combined)	39.60%		39.60%		37.41%		41.40%		41.64%	
Digester Alkalinity Limited?	yes		yes		yes		yes		yes	
SOUR in Digester (mg O2/hour/gram TS)	0.91	want < 1.5 at 20 C, goal = 1.13	0.91	want < 1.5 at 20 C, goal = 1.13	0.80	want < 1.5 at 20 C, goal = 1.13	0.71	want < 1.5 at 20 C, goal = 1.13	0.75	want < 1.5 at 20 C, goal = 1.13
Dewatered Solids From Plant (kg/day)	2,179		2,180		2,179		1,507		1,587	
PBNR AOR (kg/day)	6,007		6,007		6,217		4,329		4,496	
PBNR SOR (kg/day)	17,571		17,572		20,847		11,910		12,093	
PBNR Total Required Air Rate in Zones 3-5 (N*m3/hr)	8,434		8,434		10,225		6,141		6,094	

This document is the property of CH2M HILL, Inc.
The expression of the information contained in this
document is protected under U.S. copyright law.

Use Instructions: See Comment in this coll.

Linked Model Input	Current Run:	Comments	Scenarios: Max Month (winter)	Comments	Max Month (summer)	Comments	Average Day	Comments	For Class 1 Reliability	Comments
Flow (m3/day)	4,907	MM	4,907	MM	4,907	MM	3,505	AD Flow	3,681	75% of MM
Diurnal Flow Peaking Factor	1.43	MxD:MM	1.43	MxD:MM	1.43	MxD:MM	2	MxD:AD	1.43	Same as MxD:MM
CBOD5 (kg/day)	3,924	MM loading	3,924	MM loading	3,924	MM loading	2,802	AD Loading	2,943	75% of MM
TSS (kg/day)	4,414	MM loading	4,414	MM loading	4,414	MM loading	3,153	AD Loading	3,310	75% of MM
% VS	75%		75%		75%		75%		75%	
TKN (kg/day)	736	MM loading	736	MM loading	736	MM loading	525	AD Loading	552	75% of MM
Ammonia -N (kg/day)	441	MM loading	441	MM loading	441	MM loading	315	AD Loading	331	75% of MM
Total Phosphate - P (kg/day)	122	MM loading	122	MM loading	122	MM loading	88	AD Loading	92	75% of MM
Alkalinity (kg/day)	4904	Assumed at 1000 mg/L	4904	Assumed at 1000 mg/L	4904	Assumed at 1000 mg/L	3503	Assumed at 1000 mg/L	3678	Assumed at 1000 mg/L
Hydrogen Sulfide (kg/day)	118	Assumed at 24 mg/L	118	Assumed at 24 mg/L	118	Assumed at 24 mg/L	84	Assumed at 24 mg/L	88	Assumed at 24 mg/L
Number of Aeration Basin Trains Online	3		3		3		3		3	
Volume per Train (m3)	4,126		4,126		4,126		4,126		4,126	
Total Aeration Basin Volume in Service (m3)	12,378		12,378		12,378		12,378		12,378	
SRT	10		10		10		10		10	
System pH	7.2		7.2		7.2		7.2		7.2	
Temperature °C	14	Minimum Month	14	Minimum Month	24.6	Maximum Month	16.8	Annual average	14	Minimum Month
Nitrified Recycle Rate (% of Aer Basin influent flow)	615%		615%		615%		615%		615%	
Number of Secondary Clarifiers Online	2		2		2		2		1	
Surface Area per Secondary Clarifier (sq m)	137		137		137		137		137	
Total Secondary Clarifier Area (sq m)	274		274		274		274		137	
Secondary Clarifier Diameter (m)	13		13		13		13		13	
SVI (mL/g)	150		150		150		150		150	
Average Secondary Effluent TSS (mg/L)	15	Fixed	15	Fixed	15	Fixed	15	Fixed	15	Fixed
Peak Secondary Effluent TSS (mg/L)	20	Fixed	20	Fixed	20	Fixed	20	Fixed	20	Fixed
Average RAS Underflow Rate (% of Inf Q)	45.8%	Calculated	45.8%	Calculated	45.8%	Calculated	44.1%	Calculated	44.4%	Calculated
Peak RAS Underflow Rate (% of Inf Q)	63.8%	Calculated	63.8%	Calculated	63.4%	Calculated	46.3%	Calculated	62.0%	Calculated
Thickener Solids Capture (%)	85%		85%		85%		85%		85%	
Thickened Sludge Concentration (mg/L)	30,000		30,000		30,000		30,000		30,000	
AerDig1 Volume (m3)	3,539		3,539		3,539		3,539		3,539	
AerDig1 Temperature (°C)	14	Minimum Month	14	Minimum Month	24.6	Maximum Month	16.8	Annual average	14	Minimum Month
AerDig1 DO (mg/L)	2		2		2		2		2	
AerDig1 % Denitrification	20%		20%		20%		20%		20%	
Dewatering Solids Capture (%)	95%		95%		95%		95%		95%	
Dewatered Sludge Concentration (%)	20%		20%		20%		20%		20%	
Results										
SRT	10.0		10.0		10.0		10.0		10.0	
Final Anoxic Zone NO3	0.12	want < 0.5	0.12	want < 0.5	0.05	want < 0.5	0.08	want < 0.5	0.11	want < 0.5
Secondary Effluent TSS (mg/L)	15.0	want < 60 (goal = 42)	15.0	want < 60 (goal = 42)	15.0	want < 60 (goal = 42)	15.0	want < 60 (goal = 42)	15.0	want < 60 (goal = 42)
Secondary Effluent CBOD5 (mg/L)	4.70	want < 60 (goal = 42)	4.69	want < 60 (goal = 42)	4.15	want < 60 (goal = 42)	4.45	want < 60 (goal = 42)	4.61	want < 60 (goal = 42)
Secondary Effluent COD (mg/L)	60.3	want < 150, (goal = 105.0)	60.3	want < 150, (goal = 105.0)	59.8	want < 150, (goal = 105.0)	60.0	want < 150, (goal = 105.0)	60.1	want < 150, (goal = 105.0)
Secondary Effluent TN (mg/L)	16.2	want < 70, (goal = 49.0)	16.2	want < 70, (goal = 49.0)	16.1	want < 70, (goal = 49.0)	15.7	want < 70, (goal = 49.0)	15.9	want < 70, (goal = 49.0)
Secondary Effluent NH3-N (mg/L)	0.15		0.15		0.08		0.09		0.15	
Secondary Effluent NO3-N (mg/L)	12.55	want < 18 (goal is 12.6)	12.55	want < 18 (goal is 12.6)	12.58	want < 18 (goal is 12.6)	12.16	want < 18 (goal is 12.6)	12.22	want < 18 (goal is 12.6)
Secondary Effluent TP (mg/L)	5.10	want < 15 (goal = 10.5)	5.11	want < 15 (goal = 10.5)	1.90	want < 15 (goal = 10.5)	5.35	want < 15 (goal = 10.5)	6.38	want < 15 (goal = 10.5)
Influent COD (mg/L)	1,568	~1320 mg/L per ops data	1,568	~1320 mg/L per ops data	1,568	~1320 mg/L per ops data	1,568	~1320 mg/L per ops data	1,569	~1320 mg/L per ops data
Corresponding Average MLSS (mg/L)	3,340	want < 3400 at MM	3,341	want < 3400 at MM	3,299	want < 3400 at MM	2,418	want < 3400 at MM	2,528	want < 3400 at MM
Secondary Influent MLSS (mg/L)	3,321		3,322		3,278		2,402		2,511	
Nitrified Recycle Rate (m3/day)	32,923		32,921		32,924		24,450		25,507	
Solids Loading Rate To Secondary Clarifiers (kg/day-sq m)	94.64		94.63		93.38		50.18		109.72	
RAS Rate (m3/day)	2,455		2,453		2,453		1,750		1,840	
Corresponding WAS (kg/day)	4,061		4,062		4,010		2,941		3,074	
Combined Thickened Feed Sludge to Aerobic Dig. (kg/day)	3,452		3,452		3,408		2,500		2,613	
Digester Volatile Solids Loading Rate (kg/day-m3)	0.56		0.56		0.53		0.40		0.42	
Digester SRT	30.76		30.75		31.15		42.47		40.63	
Model Prediction of VS Destruction (combined)	39.60%		39.60%		37.41%		41.40%		41.64%	
Digester Alkalinity Limited?	yes		yes		yes		yes		yes	
SOUR in Digester (mg O2/hour/gram TS)	0.91	want < 1.5 at 20 C, goal = 1.13	0.91	want < 1.5 at 20 C, goal = 1.13	0.80	want < 1.5 at 20 C, goal = 1.13	0.71	want < 1.5 at 20 C, goal = 1.13	0.75	want < 1.5 at 20 C, goal = 1.13
Dewatered Solids From Plant (kg/day)	2,179		2,180		2,179		1,507		1,587	
PBNR AOR (kg/day)	6,007		6,007		6,217		4,329		4,496	
PBNR SOR (kg/day)	17,571		17,572		20,847		11,910		12,093	
PBNR Total Required Air Rate in Zones 3-5 (N*m3/hr)	8,434		8,434		10,225		6,141		6,094	

This document is the property of CH2M HILL, Inc.
The expression of the information contained in this
document is protected under U.S. copyright law.

Stoichiometric Parameters		Value	Default	Units
Hydrolysis of Particulate Substrate: X_S				
Production of Soluble Inert COD: S_I	f_{SI}	0.00		g COD/g COD
Heterotrophic Organisms: X_H				
Yield	Y_H	0.6660		g COD/g COD
Fraction of Lysis Inerts	f_{XI}	0.08		g COD/g COD
Phosphorus Accumulating Organisms: X_{PAO}				
Yield (biomass/PHA)	Y_{PAO}	0.6250		g COD/g COD
Phosphate release per PHA Store	Y_{PO4}	0.40		g P/g COD
PHA requirement for PP storage	Y_{PHA}	0.20		g COD/g P
Fraction of Lysis Inerts	f_{XI}	0.08		g COD/g COD
Autotrophic Organisms: X_{AUT}				
Yield per NO_3-N	Y_A	0.19		g COD/g N
Fraction of Lysis Inerts	f_{XI}	0.08		g COD/g COD
Methanol Degraders-Population 1: X_{M1}				
Yield per MeOH COD	Y_{M1}	0.58		g COD/g COD
Fraction of Lysis Inerts	f_{XI}	0.10		g COD/g COD
Methanol Degraders-Population 2: X_{M2}				
Yield per MeOH COD	Y_{M2}	0.36		g COD/g COD
Fraction of Lysis Inerts	f_{XI}	0.10		g COD/g COD

Conversion Factors for Conservation Equatior		Value	Default	Units
Nitrogen Content of:	Check Delta	0.00		
Soluble Inert COD: S_I	i_{NSI}	0.0600	0.01	g N/g COD
Fermentable Substrate: S_F	i_{NSF}	0.0392	0.03	g N/g COD
Inert Particulate COD: X_I	i_{NXI}	0.0400	0.02	g N/g COD
Slowly Biodegradable Substrate: X_S	i_{NXS}	0.0392	0.04	g N/g COD
Biomass: X_H, X_{PAO}, X_{AUT}, X_{m1}, X_{m2}	i_{NBM}	0.0606	0.07	g N/g COD
Decay Products:, $X_{d,aa}$	i_{NXdaa}	0.0606	0.02	g N/g COD
Phosphorus Content of:	Check Delta	0.00		
Soluble Inert COD: S_I	i_{PSI}	0.0000	0.00	g P/g COD
Fermentable Substrate: S_F	i_{PSF}	0.0000	0.01	g P/g COD
Inert Particulate COD: X_I	i_{PXI}	0.0073	0.01	g P/g COD
Slowly Biodegradable Substrate: X_S	i_{PXS}	0.0053	0.01	g P/g COD
Biomass: X_H, X_{PAO}, X_{AUT}	i_{PBM}	0.0200	0.02	g P/g COD
Decay Products:, $X_{d,aa}$	i_{PXdaa}	0.0200	1.02	g P/g COD
TSS to COD Ratio for:				
Inert Particulate COD: X_I	i_{TSSXI}	0.7825	0.75	g TSS/g COD
Slowly Biodegradable Substrate: X_S	i_{TSSXS}	0.7825	0.75	g TSS/g COD
Biomass: X_H, X_{PAO}, X_{AUT}, X_{m1}, X_{m2}	i_{TSSBM}	0.7825	0.90	g TSS/g COD
Decay Products: $X_{d,aa}$	$i_{TSSXdaa}$	0.7825	0.75	g TSS/g COD

Nitrogen Ratio Adjustment			Ratio
Fermentable Substrate: S_F	i_{NSF}	0.0392	
Slowly Biodegradable Substrate: X_S	i_{NXS}	0.0392	1.00
Alternate Nitrogen Ratic			
Fermentable Substrate: S_F	i_{NSF}	0.0535	
Slowly Biodegradable Substrate: X_S	i_{NXS}	0.0356	1.50

Kinetic Parameters		Unit	Typical Values 20 °C	Typical Values 10 °C	Temperature 14.0 deg. C
Hydrolysis of Particulate Substrate: X_S					
k_h	(Hydrolysis Rate)	1/day	3.00	2.00	2.35
n_{NO3}	(Anoxic Reduction Factor)		0.60	0.60	0.60
n_{fe}	(Anaerobic Reduction Factor)		0.40	0.40	0.40
K_{O2}	(Oxygen Inhibition)	g O_2/m^3	0.20	0.20	0.20
K_{NO3}	(Nitrate Inhibition)	g N/m^3	0.50	0.50	0.50
K_x	(Particulate Inhibition)	g COD/g COD	0.10	0.10	0.10
Hydrolysis of Decay Products: X_{daa}					
K_{hdaa}	(Hydrolysis Rate)	1/d	1.20		0.94
K_{O2Ydaa}	(Oxygen Inhibition)	g O_2/m^3	0.10		0.10
$K_{NO3Ydaa}$	(Nitrate Inhibition)	g N/m^3	0.10		0.10
K_{Xdaa}	(Particulate Inhibition)	g X_{daa}/g X_H	0.10		0.10
Heterotrophic Organisms: X_H					
μ_H	(Max Growth Rate)	1/day	6.00	3.00	2.60
q_{fe}	(Max Fermentation Rate)	g COD/(g COD*d)	3.00	1.50	1.98
n_{NO3}	(Anoxic Reduction Factor)		0.80	0.80	0.80
b_H	(Decay Rate)	1/day	0.40	0.20	0.50
K_{O2}	(Oxygen Inhibition)	g O_2/m^3	0.20	0.20	0.20
K_F	(Growth on S_F)	g COD/m^3	4.00	4.00	2.00
K_{fe}	(Fermentation of S_F)	g COD/m^3	4.00	4.00	4.00
K_A	(Growth on S_A)	g COD/m^3	4.00	4.00	2.00
K_{NO3}	(Anoxic Growth)	g N/m^3	0.50	0.50	0.50
K_{NH4}	(Nitrogen Inhibition)	g N/m^3	0.05	0.05	0.05
K_P	(Phosphorus Inhibition)	g P/m^3	0.01	0.01	0.01
K_{ALK}	(Alkalininty Inhibition)	mole HCO_3^-/m^3	0.10	0.10	0.10
Phosphorus Accumulating Organisms: X_{PAO}					
q_{PHA}	(X_{PHA} Storage Rate)	g X_{PHA}/(g X_{PAO}*d)	3.00	2.00	6.00
q_{PP}	(X_{PP} Storage Rate)	g X_{PP}/(g X_{PAO}*d)	1.50	1.00	1.18
μ_{PAO}	(Max Growth Rate)	1/day	1.00	0.67	0.79
n_{NO3}	(Anoxic Reduction Factor)		0.60	0.60	0.60
b_{PAO}	(X_{PAO} Decay Rate)	1/day	0.20	0.10	0.10
b_{PP}	(X_{PP} Decay Rate)	1/day	0.20	0.10	0.10
b_{PHA}	(X_{PHA} Decay Rate)	1/day	0.20	0.10	0.10
K_{O2}	(Oxygen Inhibition)	g O_2/m^3	0.20	0.20	0.20
K_{NO3}	(Anoxic Growth)	g N/m^3	0.50	0.50	0.50
K_A	(Growth on S_A)	g COD/m^3	4.00	4.00	2.00
K_{NH4}	(Nitrogen Inhibition)	g N/m^3	0.05	0.05	0.0050
K_{PS}	(Phosphorus Inhibition of PP)	g P/m^3	0.20	0.20	0.20
K_P	(Phosphorus Inhibition of Growth)	g P/m^3	0.01	0.01	0.0050
K_{ALK}	(Alkalininty Inhibition)	mole HCO_3^-/m^3	0.10	0.10	0.10
K_{PP}	(Polyphosphate Inhibition)	g X_{PP}/g X_{PAO}	0.01	0.01	0.02
K_{MAX}	(Max Ratio of X_{PP}/X_{PAO})	g X_{PP}/g X_{PAO}	0.34	0.34	0.34
K_{IPP}	(Inhibition of PP Storage)	g X_{PP}/g X_{PAO}	0.02	0.02	0.02
K_{PHA}	(Saturation for PHA)	g X_{PHA}/g X_{PAO}	0.01	0.01	0.01
Autotrophic Organisms: X_{AUT}					
μ_{AUT}	(Maximum Growth Rate)	1/day	1.00	0.35	0.42
b_{AUT}	(Decay Rate)	1/day	0.15	0.05	0.04
K_{O2}	(Oxygen Inhibition)	g O_2/m_3	0.50	0.50	0.50
K_{NH4}	(Nitrogen Inhibition: SUBSTRATE)	g N/m^3	1.00	1.00	0.49
K_{ALK}	(Alkalininty Inhibition)	mole HCO_3^-/m^3	0.50	0.50	0.01
K_P	(Phosphorus Inhibition of Growth)	g P/m^3	0.01	0.01	0.0050
Precipitation					
k_{PRE}	(Rate of Phosphorus Precipitation)	m^3/(g $Me(OH)_3$*d)	1.00	1.00	2.00
k_{RED}	(Rate of Phosphous Redissolution)	1/day	0.60	0.60	0.10
K_{ALK}	(Alkalininty Inhibition)	mole HCO_3^-/m^3	0.50	0.50	0.50
Methanol Degrading Organisms - Population 1					
μ_{M1}	(Maximum Growth Rate)	1/day	3.88		7.00
n_{NO3M1}	(Anoxic Reduction Factor)		0.21		0.20
b_{M1}	(Decay Rate)	1/day	0.18		0.20
K_{O2M1}	(Oxygen Inhibition)	g O_2/m^3	0.20		0.50
K_{M1}	(Growth on Methanol)	g COD/m^3	4.00		4.00
K_{NO3M1}	(Anoxic Growth)	g N/m^3	0.50	0.50	0.80
K_{NH4M1}	(Nitrogen Inhibition)	g N/m^3	0.05		0.05
K_{ALKM1}	(Alkalinity Inhibition)	mole HCO_3^-/m^3	0.10		0.10
K_{PM1}	(Phosphorus Inhibition)	g P/m^3	0.01		0.01
Methanol Degrading Organisms - Population 2					
μ_{M2}	(Maximum Growth Rate)	1/day	1.72		7.00
n_{NO3M2}	(Anoxic Reduction Factor)		0.76		0.80
b_{M2}	(Decay Rate)	1/day	0.25		0.25
K_{O2M2}	(Oxygen Inhibition)	g O_2/m^3	0.20		0.50
K_{M2}	(Growth on Methanol)	g COD/m^3	4.00		1.00
K_{NO3M2}	(Anoxic Growth)	g N/m^3	0.50	0.50	0.50
K_{NH4M2}	(Nitrogen Inhibition)	g N/m^3	0.05		0.05
K_{ALKM2}	(Alkalinity Inhibition)	mole HCO_3^-/m^3	0.10		0.10
K_{PM2}	(Phosphorus Inhibition)	g P/m^3	0.01		0.01

This document is the property of CH2M HILL, Inc.
The expression of the information contained in thi
document is protected under U.S. copyright law.

Mass Balance for Average Flow Conditions

Constituent	Raw Wastewater (RW)	Main Recycle Influent (RecyI)	Main Recycled Stream (Recycle)	Main Combined Recycle Effluent (RecyE)	Main Bioreactor Influent (BI)	Main Secondary Clarifier Influent (SI)	Main Secondary Clarifier Effluent (SE)	Plant Effluent (PLE)	Main WAS	GBT WAS Thickener Influent (TWASI)	GBT Thickened WAS (TWAS)	AerDig1 Aerobic Digester Influent (ADI)	AerDig1 Aerobic Digester Effluent (ADE)	BFP Dewatering Influent (DWI)	BFP Dewatered Sludge (DWE)	Biosolids to Dispoal	GBT WAS Thickening Recycle (TWASR)	BFP Dewatering Recycle (DWR)	Recy Combined Discharge	Ender
Flow (m3/day)	4,907	4,907	446	5,354	5,354	7,810	4,897	4,897	457	457	115	115	115	115	11	11	342	104	446	
Carbonaceous BOD_5 (kg/day)	3,924	3,924	184	4,108	4,108	7,179	23	23	1,124	1,124	955	955	298	298	283	283	169	15	184	
COD (kg/day)	7,697	7,697	606	8,304	8,304	21,644	295	295	3,352	3,352	2,836	2,836	1,715	1,715	1,625	1,625	516	90	606	
TSS (kg/day)	4,415	4,415	724	5,139	5,139	25,938	73	73	4,061	4,061	3,452	3,452	2,294	2,294	2,179	2,179	609	115	724	
VSS (kg/day)	3,311	3,311	412	3,723	3,723	14,978	42	42	2,345	2,345	1,993	1,993	1,204	1,204	1,144	1,144	352	60	412	
TKN (kg-N/day)	736	736	47	783	783	1,151	18	18	178	178	150	150	115	115	95	95	28	20	47	
NH_3-N (kg-N/day)	441	441	14	456	456	1	1	1	0	0	0	0	16	16	1	1	0	14	14	
NO_3-N (kg-N/day)	0	0	41	41	41	98	61	61	6	6	1	1	40	40	4	4	4	36	41	
TP (kg-P/day)	122	122	135	257	257	1,505	25	25	232	232	196	196	196	196	98	98	36	99	135	
Alkalinity (kg/day as $CaCO_3$)	4,904	4,904	244	5,149	5,149	5,577	3,497	3,497	327	327	82	82	0	0	0	0	244	0	244	
H_2S (kg/day)	118	118	0	118	118	0	0	0	0	0	0	0	0	0	0	0	0	0	0	
BOD_5 (mg/L)	800	800	411	767	767	919	5	5	2,457	2,457	8,299	8,299	2,591	2,591	25,988	25,988	493	143	411	
COD (mg/L)	1,568	1,568	1,358	1,551	1,551	2,771	60	60	7,329	7,329	24,648	24,648	14,905	14,905	149,088	149,088	1,507	868	1,358	
TSS (mg/L)	900	900	1,621	960	960	3,321	15	15	8,879	8,879	30,000	30,000	19,938	19,938	200,000	200,000	1,780	1,101	1,621	
VSS (mg/L)	675	675	923	695	695	1,918	9	9	5,127	5,127	17,324	17,324	10,463	10,463	104,959	104,959	1,028	578	923	
TKN (mg-N/L)	150	150	105	146	146	147	4	4	389	389	1,307	1,307	999	999	8,749	8,749	80	188	105	
NH_3-N (mg-N/L)	90	90	32	85	85	0	0	0	0	0	0	0	138	138	138	138	0	138	32	
NO_3-N (mg-N/L)	0	0	91	8	8	13	13	13	13	13	13	13	348	348	348	348	13	348	91	
TP (mg-P/L)	25	25	302	48	48	193	5	5	508	508	1,707	1,707	1,707	1,707	8,974	8,974	105	947	302	
Alkalinity (mg/L as CaCO3)	999	999	548	962	962	714	714	714	714	714	714	714	0	0	0	0	714	0	548	
H_2S (mg/L)	24	24	0	22	22	0	0	0	0	0	0	0	0	0	0	0	0	0	0	

Mass Balance for Diurnal Peak Flow Conditions

Constituent	Raw Wastewater (RW)	Main Recycle Influent (RecyI)	Main Recycled Stream (Recycle)	Main Combined Recycle Effluent (RecyE)	Main Bioreactor Influent (BI)	Main Secondary Clarifier Influent (SI)	Main Secondary Clarifier Effluent (SE)		Main WAS	GBT WAS Thickener Influent (TWASI)	GBT Thickened WAS (TWAS)	AerDig1 Aerobic Digester Influent (ADI)	AerDig1 Aerobic Digester Effluent (ADE)	BFP Dewatering Influent (DWI)	BFP Dewatered Sludge (DWE)		GBT WAS Thickening Recycle (TWASR)	BFP Dewatering Recycle (DWR)	Recy Combined Discharge	
Flow (m3/day)	7,018	7,018	680	7,698	7,698	12,605	7,002	7,002	696	696	169	169	169	169	16	16	527	153	680	
Carbonaceous BOD_5 (kg/day)	5,101	5,101	271	5,372	5,372	8,743	27	27	1,082	1,082	1,409	1,409	438	438	416	416	249	22	271	
COD (kg/day)	10,006	10,006	887	10,894	10,894	39,934	418	418	4,908	4,908	4,153	4,153	2,521	2,521	2,388	2,388	754	133	887	
TSS (kg/day)	5,738	5,738	1,064	6,802	6,802	48,211	140	140	5,970	5,970	5,075	5,075	3,373	3,373	3,204	3,204	896	169	1,064	
VSS (kg/day)	4,304	4,304	604	4,907	4,907	27,738	81	81	3,435	3,435	2,920	2,920	1,770	1,770	1,681	1,681	515	88	604	
TKN (kg/day)	956	956	79	1,035	1,035	2,075	31	31	254	254	214	214	169	169	140	140	40	29	79	
NH_3-N (kg-N/day)	574	574	22	595	595	14	8	8	1	1	0	0	23	23	2	2	1	21	22	
NO_3-N (kg-N/day)	0	0	59	59	59	142	79	79	8	8	2	2	59	59	6	6	6	53	59	
TP (kg-P/day)	159	159	205	364	364	3,143	39	39	386	386	326	326	289	289	144	144	60	145	205	
Alkalinity (kg/day as $CaCO_3$)	6,375	6,375	263	6,638	6,638	6,289	3,494	3,494	347	347	84	84	0	0	0	0	263	0	263	
H_2S (kg/day)	153	153	0	153	153	0	0	0	0	0	0	0	0	0	0	0	0	0	0	
BOD_5 (mg/L)	727	727	398	698	698	694	4	4	1,555	1,555	8,330	8,330	2,591	2,591	25,988	25,988	472	143	398	
COD (mg/L)	1,426	1,426	1,305	1,415	1,415	3,168	60	60	7,052	7,052	24,553	24,553	14,905	14,905	149,088	149,088	1,432	868	1,305	
TSS (mg/L)	818	818	1,565	884	884	3,825	20	20	8,579	8,579	30,000	30,000	19,938	19,938	200,000	200,000	1,700	1,101	1,565	
VSS (mg/L)	613	613	888	638	638	2,201	12	12	4,936	4,936	17,260	17,260	10,463	10,463	104,959	104,959	978	578	888	
TKN (mg-N/L)	136	136	116	134	134	165	4	4	365	365	1,266	1,266	999	999	8,749	8,749	75	188	116	
NH_3-N (mg-N/L)	82	82	32	77	77	1	1	1	1	1	1	1	138	138	138	138	1	138	32	
NO_3-N (mg-N/L)	0	0	87	8	8	11	11	11	11	11	11	11	348	348	348	348	11	348	87	
TP (mg-P/L)	0	23	301	47	47	249	6	6	554	554	1,927	1,927	1,707	1,707	8,974	8,974	113	947	301	
Alkalinity (mg/L as CaCO3)	908	908	387	862	862	499	499	499	499	499	499	499	0	0	0	0	499	0	387	
H_2S (mg/L)	22	22	0	20	20	0	0	0	0	0	0	0	0	0	0	0	0	0	0	

This document is the property of CH2M HILL, Inc.
The expression of the information contained in this
document is protected under U.S. copyright law.

AerDig1

Aerobic Digester Module

Average Conditions

Constituent	Influent	Effluent
Flow (m3/day)	115	115
Carbonaceous BOD_5 (kg/day	955	298
Particulate	95	181
Heterotrophs	675	82
PAOs	185	35
PHA	0	0
Filtrate	0	0
COD (kg/day)	2,836	1,715
Particulate Bio	70	0
Particulate Non-Bio	968	968
Decay Prod Aer/Anx	86	335
Decay Prod Anaerobic	0	0
Heterotrophs	1,122	152
Autotrophs	74	35
PAOs	510	220
PHA	0	0
Soluble Bio	0	0
VFA	0	0
Colloidal Bio	0	0
Soluble Non-Bio	5	5
Colloidal Non-Bio	0	0
TSS (kg/day)	3,452	2,294
Biodegradable	55	0
Non-Biodegradable	1,501	1,501
Decay Prod Aer/Anx	67	262
Decay Prod Anaerobic	0	0
Metal Hydroxide	0	0
Metal Phosphate	0	0
Heterotrophs	878	119
Autotrophs	58	28
PAOs	399	172
PHA	0	0
Poly-P	493	212
VSS (kg/day)	1,993	1,204
Biodegradable	49	0
Non-Biodegradable	681	681
Decay Prod Aer/Anx	61	236
Decay Prod Anaerobic	0	0
Metal Hydroxide	0	0
Heterotrophs	790	107
Autotrophs	52	25
PAOs	359	155
PHA	0	0
TKN (kg-N/day)	150	115
NH_3-N (kg-N/day)	0	16
Particulate Bio Org N	3	0
Non-Bio Part Org N	39	54
Decay Prod Aer/Anx	5	20
Decay Prod Anaerobic	0	0
Heterotrophs	68	9
Autotrophs	4	2
PAOs	31	13
Non-Bio Soluble Org. N	0	0
Non-Bio Colloidal Org. N	0	0
Soluble Bio Org N	0	0
Colloidal Bio Org N	0	0
NO_3-N (kg-N/day)	1	40
TP (kg-P/day)	196	196
Bio Particulate	0	0
Non-Bio Particulate	7	12
Decay Prod Aer/Anx	2	7
Decay Prod Anaerobic	0	0
Metal Phosphate	0	0
Heterotrophs	22	3
Autotrophs	1	1
PAOs	10	4
Poly-P	153	66
Ortho-PO_4	0	104
Alkalinity (kg/day as $CaCO_3$)	82	0
H_2S (kg/day)	0	0
BOD_5 (mg/L)	8,299	2,591
COD (mg/L)	24,648	14,905
TSS (mg/L)	30,000	19,938
VSS (mg/L)	17,324	10,463
TKN (mg-N/L)	1,307	999
NH_3-N (mg-N/L)	0	138
NO_3-N (mg-N/L)	13	348
TP (mg-P/L)	1,707	1,707
Alkalinity (mg/L as CaCO3)	714	0
H_2S (mg/L)	0	0

Constituent	Influent	Effluent
Flow (m3/day)	115	115
Carbonaceous BOD_5 (kg/day)	955	298
Particulate	95	181
Heterotrophs	675	82
PAOs	185	35
PHA	0	0
Filtrate	0	0
COD (kg/day)	2,836	1,715
Particulate Bio	70	0
Particulate Non-Bio	968	968
Decay Prod Aer/Anx	86	335
Decay Prod Anaerobic	0	0
Heterotrophs	1,122	152
Autotrophs	74	35
PAOs	510	220
PHA	0	0
Soluble Bio	0	0
VFA	0	0
Colloidal Bio	0	0
Soluble Non-Bio	5	5
Colloidal Non-Bio	0	0
TSS (kg/day)	3,452	2,294
Biodegradable	55	0
Non-Biodegradable	1,501	1,501
Decay Prod Aer/Anx	67	262
Decay Prod Anaerobic	0	0
Metal Hydroxide	0	0
Metal Phosphate	0	0
Heterotrophs	878	119
Autotrophs	58	28
PAOs	399	172
PHA	0	0
Poly-P	493	212
VSS (kg/day)	1,993	1,204
Biodegradable	49	0
Non-Biodegradable	681	681
Decay Prod Aer/Anx	61	236
Decay Prod Anaerobic	0	0
Metal Hydroxide	0	0
Heterotrophs	790	107
Autotrophs	52	25
PAOs	359	155
PHA	0	0
TKN (kg-N/day)	150	115
NH_3-N (kg-N/day)	0	16
Particulate Bio Org N	3	0
Non-Bio Part Org N	39	54
Decay Prod Aer/Anx	5	20
Decay Prod Anaerobic	0	0
Heterotrophs	68	9
Autotrophs	4	2
PAOs	31	13
Non-Bio Soluble Org. N	0	0
Non-Bio Colloidal Org. N	0	0
Soluble Bio Org N	0	0
Colloidal Bio Org N	0	0
NO_3-N (kg-N/day)	1	40
TP (kg-P/day)	196	196
Bio Particulate	0	0
Non-Bio Particulate	7	12
Decay Prod Aer/Anx	2	7
Decay Prod Anaerobic	0	0
Metal Phosphate	0	0
Heterotrophs	22	3
Autotrophs	1	1
PAOs	10	4
Poly-P	153	66
Ortho-PO_4	0	104
Alkalinity (kg/day as $CaCO_3$)	82	0
H_2S (kg/day)	0	0

This document is the property of CH2M HILL, Inc.
The expression of the information contained in thi
document is protected under U.S. copyright law.

Facility Operating Parameters		
Bioreactor Volume, m3		3,538.98
Minimum Valid SRT, days		3.00
SRT, Days		30.76
Temperature, oC		14
Volatile Solids Loading (kg VSS/m3-day)		0.56
Volatile Solids Reduction, %		39.60%
TSS Reduction %		33.54%
SOUR mg-O2/(g-VSS x hour) at 20 oC		1.24
SOUR mg-O2/(g-TSS x hour) at 20 oC		0.65
SOUR mg-O2/(g-VSS x hour) with nitrification at 20 oC		1.74
SOUR mg-O2/(g-TSS x hour) with nitrification at 20 oC		0.91
Total AOR (kgO2/day)		1,316
% denitrification		20%
Nutrients		
Nitrogen Released Due to Digestion (transformed to NH3) (kg/day)		64.47
Nitrogen Nitrified (Kg/day)		48.66
Nitrogen Denitrified (Kg/day)		10.02
Alkalinity in Feed (Kg/day)		82
Alkalinity Released Due to Digestion (Kg/day)		232
Alkalinity Lost Through Nitrification (Kg/day)		350
Alkalinity Produced Through Denitrification (Kg/day)		36
Alkalinity Discharged (Kg/day		0
Kinetic Limitation on Nitrification		
DO, mg/L		2
Maximum Specific Growth Rate (μ_{max}), Day^{-1} at Operational DO		0.3408
Ammonia in Digester Effluent Due to Kinetic Limitations		
	a	0.26
	b	-1,294.75
	c	21.31
Effluent Ammonia (mg-N/L) for Kinetic Limitation		0.02
Potential Nitrification Associated with Kinetics (Kg/day)		64.49

Aerobic Biological Kinetics	
Parameter	**Temperature**
Heterotrophs	
Maximum Specific Growth Rate (μ_{max}), Day^{-1}	2.60
Half Saturation for Organics (K_S), mg BOD_5/L	3.13
Half Saturation for Organics (K_S), mg Bio COD/L	5.00
True Yield (Y_H), mg COD/mg COD (aerobic)	0.67
Decay Rate (b_H), Day^{-1}	0.22
Inactive Fraction (f_I)	0.19
Volatile Fraction, % of TSS	0.90
COD/VSS Ratio, mg COD/mg VSS	1.42
Nitrogen Content, N/VSS (%)	0.09
Phosphorus Content, P/VSS (%	0.03
Autotrophs	
Maximum Specific Growth Rate (μ_{max}), Day^{-1}	0.43
Half Saturation for NH_3-N (K_N), mg-N/L	0.49
Half Saturation for O_2 (K_O), mg-O_2/L	0.50
True Yield (Y_A), mg TSS/mg NH_3-N	0.15
True Yield (Y_A), mg COD/mg NH_3-N	0.19
Decay Rate (b_A), Day^{-1}	0.04
Volatile Fraction, % of TSS	0.90
COD/VSS Ratio, mg COD/mg VSS	1.42
Nitrogen Content, N/VSS (%)	0.09
Phosphorus Content, P/VSS (%	0.03
PAOs	
True Yield (Y_H), mg TSS/mg BOD_5	0.76
True Yield (Y_H), mg COD/mg COD	0.62
Decay Rate (b_H), Day^{-1}	0.04
Inactive Fraction (f_I)	0.19
Volatile Fraction, % of TSS	0.90
COD/VSS Ratio, mg COD/mg VSS	1.42
Nitrogen Content, N/VSS (%)	0.09
Phosphorus Content, P/VSS (%)	0.03
TSS Content of Poly-F	3.23

This document is the property of CH2M HILL, Inc.
The expression of the information contained in th
document is protected under U.S. copyright law.

Diurnal Peak Flow Conditions

Constituent	Influent	Effluent	
Flow (m3/day)	169	169	
Carbonaceous BOD_5 (kg/day	1,409	438	
Particulate	489	267	
Heterotrophs	672	121	
PAOs	248	51	
PHA	0	0	
Filtrate	0	0	
COD (kg/day)	4,153	2,521	
Particulate Bio	91	0	
Particulate Non-Bio	1,453	1,423	
Decay Prod Aer/Anx	720	493	
Decay Prod Anaerobic	0	0	
Heterotrophs	1,117	223	
Autotrophs	80	52	
PAOs	685	323	
PHA	0	0	
Soluble Bio	0	0	
VFA	0	0	
Colloidal Bio	0	0	
Soluble Non-Bio	7	8	
Colloidal Non-Bio	0	0	
TSS (kg/day)	5,075	3,373	
Biodegradable	71	0	
Non-Biodegradable	2,121	2,207	
Decay Prod Aer/Anx	563	386	
Decay Prod Anaerobic	0	0	
Metal Hydroxide	0	0	
Metal Phosphate	0	0	
Heterotrophs	874	175	
Autotrophs	62	41	
PAOs	536	253	
PHA	0	0	
Poly-P	847	312	
VSS (kg/day)	2,920	1,770	
Biodegradable	64	0	
Non-Biodegradable	1,023	1,002	
Decay Prod Aer/Anx	507	347	
Decay Prod Anaerobic	0	0	
Metal Hydroxide	0	0	
Heterotrophs	786	157	
Autotrophs	56	37	
PAOs	483	227	
PHA	0	0	
TKN (kg-N/day)	214	169	
NH_3-N (kg-N/day)	0	23	
Particulate Bio Org N	5	0	
Non-Bio Part Org N	58	79	
Decay Prod Aer/Anx	36	30	
Decay Prod Anaerobic	58	0	
Heterotrophs	68	14	
Autotrophs	5	3	
PAOs	42	20	
Non-Bio Soluble Org. N	0	0	
Non-Bio Colloidal Org. N	0	0	
Soluble Bio Org N	0	0	
Colloidal Bio Org N	0	0	
NO_3-N (kg-N/day)	2	59	
TP (kg-P/day)	326	289	
Bio Particulate	2	0	
Non-Bio Particulate	9	18	
Decay Prod Aer/Anx	14	10	
Decay Prod Anaerobic	0	0	
Metal Phosphate	0	0	
Heterotrophs	22	4	
Autotrophs	2	1	
PAOs	14	6	
Poly-P	262	97	
Ortho-PO_4	1	153	
Alkalinity (kg/day as $CaCO_3$)	84	0	
H_2S (kg/day)	0	0	
BOD_5 (mg/L)	8,330	2,591	
COD (mg/L)	24,553	14,905	
TSS (mg/L)	30,000	19,938	
VSS (mg/L)	17,260	10,463	
TKN (mg-N/L)	1,266	999	
NH_3-N (mg-N/L)	1	138	
NO_3-N (mg-N/L)	11	348	
TP (mg-P/L)	1,927	1,707	
Alkalinity (mg/L as CaCO3)	499	0	
H_2S (mg/L)	0	0	

This document is the property of CH2M HILL, Inc.
The expression of the information contained in thi
document is protected under U.S. copyright law.

Model Results Summary for Alternative 4, Plant 2 Conventional WWTP

Projected 2028 Average Daily Flow = 102 m^3/day

Projected 2028 Maximum Month Flow = 143m^3/day

Estimated Equipment Sizing:

- 3 process reactors at 121 m^3 each
- 2 circular clarifiers at 2.3 m diameter each
- 361 m^3 total aerobic digester volume

Use Instructions: See Comment in this cell.

Linked Model Input	Current Run:	Comments	Scenarios	Comments		Comments		Comments		Comments
Flow (m3/day)	143	MM	143	MM	143	MM	102	AD Flow	107	75% of MM
Diurnal Flow Peaking Factor	1.43	MxD:MM	1.43	MxD:MM	1.43	MxD:MM	2	MxD:AD	1.43	Same as MxD:MM
CBOD5 (kg/day)	114	MM loading	114	MM loading	114	MM loading	82	AD Loading	86	75% of MM
TSS (kg/day)	129	MM loading	129	MM loading	129	MM loading	92	AD Loading	97	75% of MM
% VS	75%		75%		75%		75%		75%	
TKN (kg/day)	21	MM loading	21	MM loading	21	MM loading	15	AD Loading	16	75% of MM
Ammonia-N (kg/day)	13	MM loading	13	MM loading	13	MM loading	9	AD Loading	10	75% of MM
Total Phosphate - P (kg/day)	4	MM loading	4	MM loading	4	MM loading	3	AD Loading	3	75% of MM
Alkalinity (kg/day)	143	Assumed at 1000 mg/L	143	Assumed at 1000 mg/L	143	Assumed at 1000 mg/L	102	Assumed at 1000 mg/L	107	Assumed at 1000 mg/L
Hydrogen Sulfide (kg/day)	3	Assumed at 24 mg/L	3	Assumed at 24 mg/L	3	Assumed at 24 mg/L	2	Assumed at 24 mg/L	3	Assumed at 24 mg/L
Number of Aeration Basin Trains Online	3		3		3		3		3	
Volume per Train (m3)	121		121		121		121		121	
Total Aeration Basin Volume in Service (m3)	363		363		363		363		363	
SRT	10		10		10		10		10	
System pH	7.2		7.2		7.2		7.2		7.2	
Temperature °C	14	Minimum Month	14	Minimum Month	24.6	Maximum month	16.8	Annual average	14	Minimum Month
Nitrified Recycle Rate (% of Aer Basin influent flow)	600%		600%		600%		600%		600%	
Number of Secondary Clarifiers Online	2		2		2		2		1	
Surface Area per Secondary Clarifier (sq m)	4.09		4.09		4.09		4.09		4.09	
Total Secondary Clarifier Area (sq m)	8.17		8.17		8.17		8.17		4.09	
Secondary Clarifier Diameter (m)	2.28		2.28		2.28		2.28		2.28	
SVI (mL/g)	150		150		150		150		150	
Average Secondary Effluent TSS (mg/L)	15	Fixed	15	Fixed	15	Fixed	15	Fixed	15	Fixed
Peak Secondary Effluent TSS (mg/L)	20	Fixed	20	Fixed	20	Fixed	20	Fixed	20	Fixed
Average RAS Underflow Rate (% of Inf Q)	45.8%	Calculated	45.8%	Calculated	45.8%	Calculated	44.0%	Calculated	44.3%	Calculated
Peak RAS Underflow Rate (% of Inf Q)	63.7%	Calculated	63.7%	Calculated	63.3%	Calculated	46.3%	Calculated	62.0%	Calculated
Thickener Solids Capture (%)	85%		85%		85%		85%		85%	
Thickened Sludge Concentration (mg/L)	20,000		20,000		20,000		20,000		20,000	
AerDig1 Volume (m3)	361		361		361		361		361	
AerDig1 Temperature (°C)	14	Minimum Month	14	Minimum Month	24.6	Maximum month	16.8	Annual average	14	Minimum Month
AerDig1 DO (mg/L)	2		2		2		2		2	
AerDig1 % Denitrification	20%		20%		20%		20%		20%	
Dewatering Solids Capture (%)	95%		95%		95%		95%		95%	
Dewatered Sludge Concentration (%)	20%		20%		20%		20%		20%	
Results										
SRT	10.0		10.0		10.0		10.0		10.0	
Final Anoxic Zone NO3 (mg/L)	0.12	want < 0.5	0.12	want < 0.5	0.05	want < 0.5	0.09	want < 0.5	0.11	want < 0.5
Secondary Effluent TSS (mg/L)	15.0	want < 60 (goal = 42)	15.0	want < 60 (goal = 42)	15.0	want < 60 (goal = 42)	15.0	want < 60 (goal = 42)	15.0	want < 60 (goal = 42)
Secondary Effluent CBOD5 (mg/L)	4.69	want < 60 (goal = 42)	4.69	want < 60 (goal = 42)	4.00	want < 60 (goal = 42)	4.46	want < 60 (goal = 42)	4.61	want < 60 (goal = 42)
Secondary Effluent COD (mg/L)	60.2	want < 150, (goal = 105.0)	60.2	want < 150, (goal = 105.0)	59.4	want < 150, (goal = 105.0)	59.9	want < 150, (goal = 105.0)	60.1	want < 150, (goal = 105.0)
Secondary Effluent TN (mg/L)	16.3	want < 70, (goal = 49.0)	16.3	want < 70, (goal = 49.0)	16.2	want < 70, (goal = 49.0)	16.1	want < 70, (goal = 49.0)	16.0	want < 70, (goal = 49.0)
Secondary Effluent NH3-N (mg/L)	0.15		0.15		0.08		0.10		0.16	
Secondary Effluent NO3-N (mg/L)	12.7	want < 18 (goal is 12.6)	12.7	want < 18 (goal is 12.6)	12.7	want < 18 (goal is 12.6)	12.5	want < 18 (goal is 12.6)	12.3	want < 18 (goal is 12.6)
Secondary Effluent TP (mg/L)	12.02	want < 15 (goal = 10.5)	12.05	want < 15 (goal = 10.5)	7.82	want < 15 (goal = 10.5)	12.22	want < 15 (goal = 10.5)	13.06	want < 15 (goal = 10.5)
Influent COD (mg/L)	1,574	~1320 mg/L per ops data	1,574	~1320 mg/L per ops data	1,574	~1320 mg/L per ops data	1,577	~1320 mg/L per ops data	1,577	~1320 mg/L per ops data
Corresponding Average MLSS (mg/L)	3,323	want < 3400 at MM	3,323	want < 3400 at MM	3,386	want < 3400 at MM	2,404	want < 3400 at MM	2,519	want < 3400 at MM
Secondary Influent MLSS (mg/L)	3,304		3,304		3,369		2,387		2,502	
Nitrified Recycle Rate (m3/day)	937		937		937		696		726	
Nitrified Recycle Rate (mgd)	0.25		0.25		0.25		0.18		0.19	
Solids Loading Rate To Secondary Clarifiers (kg/day-m2)	92.05		92.06		93.86		48.78		106.95	
RAS Rate (m3/day)	72		72		72		51		54	
Corresponding WAS (kg/day)	119		119		121		86		90	
Combined Thickened Feed Sludge to Aerobic Dig. (kg/day)	101		101		103		73		76	
Digester Volatile Solids Loading Rate (kg/day-m3)	0.16		0.16		0.15		0.11		0.12	
SRT	71.70		71.70		70.34		99.07		94.55	
Model Prediction of VS Destruction (combined)	45.12%		45.11%		43.10%		46.19%		46.50%	
Digester Alkalinity Limited?	yes		yes		yes		yes		yes	
SOUR in Digester (mg O2/hour/gram TS)	0.35	want < 1.5 at 20 C, goal = 1.13	0.35	want < 1.5 at 20 C, goal = 1.13	0.32	want < 1.5 at 20 C, goal = 1.13	0.27	want < 1.5 at 20 C, goal = 1.13	0.28	want < 1.5 at 20 C, goal = 1.13
Dewatered Solids From Plant (kg/day)	58		58		58		40		42	
PBNR AOR (kg/day)	175		175		181		126		131	
PBNR SOR (kg/day)	508		508		605		347		351	
PBNR Total Required Air Rate in Zones 3-5 (N*m3/hr)	244		244		297		179		177	

This document is the property of CH2M HILL, Inc.
The expression of the information contained in this
document is protected under U.S. copyright law.

Stoichiometric Parameters		Value	Default	Units
Hydrolysis of Particulate Substrate: X_S				
Production of Soluble Inert COD: S_I	f_{SI}	0.00		g COD/g COD
Heterotrophic Organisms: X_H				
Yield	Y_H	0.6660		g COD/g COD
Fraction of Lysis Inerts	f_{XI}	0.08		g COD/g COD
Phosphorus Accumulating Organisms: X_{PAO}				
Yield (biomass/PHA)	Y_{PAO}	0.6250		g COD/g COD
Phosphate release per PHA Store	Y_{PO4}	0.40		g P/g COD
PHA requirement for PP storage	Y_{PHA}	0.20		g COD/g P
Fraction of Lysis Inerts	f_{XI}	0.08		g COD/g COD
Autotrophic Organisms: X_{AUT}				
Yield per NO_3-N	Y_A	0.19		g COD/g N
Fraction of Lysis Inerts	f_{XI}	0.08		g COD/g COD
Methanol Degraders-Population 1: X_{M1}				
Yield per MeOH COD	Y_{M1}	0.58		g COD/g COD
Fraction of Lysis Inerts	f_{XI}	0.10		g COD/g COD
Methanol Degraders-Population 2: X_{M2}				
Yield per MeOH COD	Y_{M2}	0.36		g COD/g COD
Fraction of Lysis Inerts	f_{XI}	0.10		g COD/g COD

Conversion Factors for Conservation Equatior		Value	Default	Units
Nitrogen Content of:	Check Delta	0.00		
Soluble Inert COD: S_I	i_{NSI}	0.0600	0.01	g N/g COD
Fermentable Substrate: S_F	i_{NSF}	0.0394	0.03	g N/g COD
Inert Particulate COD: X_I	i_{NXI}	0.0403	0.02	g N/g COD
Slowly Biodegradable Substrate: X_S	i_{NXS}	0.0394	0.04	g N/g COD
Biomass: X_H, X_{PAO}, X_{AUT}, X_{m1}, X_{m2}	i_{NBM}	0.0606	0.07	g N/g COD
Decay Products:, $X_{d,aa}$	i_{NXdaa}	0.0606	0.02	g N/g COD
Phosphorus Content of:	Check Delta	0.00		
Soluble Inert COD: S_I	i_{PSI}	0.0000	0.00	g P/g COD
Fermentable Substrate: S_F	i_{PSF}	0.0000	0.01	g P/g COD
Inert Particulate COD: X_I	i_{PXI}	0.0073	0.01	g P/g COD
Slowly Biodegradable Substrate: X_S	i_{PXS}	0.0053	0.01	g P/g COD
Biomass: X_H, X_{PAO}, X_{AUT}	i_{PBM}	0.0200	0.02	g P/g COD
Decay Products:, $X_{d,aa}$	i_{PXdaa}	0.0200	1.02	g P/g COD
TSS to COD Ratio for:				
Inert Particulate COD: X_I	i_{TSSXI}	0.7825	0.75	g TSS/g COD
Slowly Biodegradable Substrate: X_S	i_{TSSXS}	0.7825	0.75	g TSS/g COD
Biomass: X_H, X_{PAO}, X_{AUT}, X_{m1}, X_{m2}	i_{TSSBM}	0.7825	0.90	g TSS/g COD
Decay Products: $X_{d,aa}$	$i_{TSSXdaa}$	0.7825	0.75	g TSS/g COD

Nitrogen Ratio Adjustment			Ratio
Fermentable Substrate: S_F	i_{NSF}	0.0394	
Slowly Biodegradable Substrate: X_S	i_{NXS}	0.0394	1.00
Alternate Nitrogen Ratic			
Fermentable Substrate: S_F	i_{NSF}	0.0537	
Slowly Biodegradable Substrate: X_S	i_{NXS}	0.0358	1.50

Kinetic Parameters		Unit	Typical Values 20 °C	10 °C	Temperature 14.0 deg. C
Hydrolysis of Particulate Substrate: X_S					
k_h	(Hydrolysis Rate)	1/day	3.00	2.00	2.35
n_{NO3}	(Anoxic Reduction Factor)		0.60	0.60	0.60
n_{fe}	(Anaerobic Reduction Factor)		0.40	0.40	0.40
K_{O2}	(Oxygen Inhibition)	g O_2/m^3	0.20	0.20	0.20
K_{NO3}	(Nitrate Inhibition)	g N/m^3	0.50	0.50	0.50
K_x	(Particulate Inhibition)	g COD/g COD	0.10	0.10	0.10
Hydrolysis of Decay Products: X_{daa}					
K_{hdaa}	(Hydrolysis Rate)	1/d	1.20		0.94
K_{O2Ydaa}	(Oxygen Inhibition)	g O_2/m^3	0.10		0.10
$K_{NO3Ydaa}$	(Nitrate Inhibition)	g N/m^3	0.10		0.10
K_{Xdaa}	(Particulate Inhibition)	g X_{daa}/g X_H	0.10		0.10
Heterotrophic Organisms: X_H					
μ_H	(Max Growth Rate)	1/day	6.00	3.00	2.60
q_{fe}	(Max Fermentation Rate)	g COD/(g COD*d)	3.00	1.50	1.98
n_{NO3}	(Anoxic Reduction Factor)		0.80	0.80	0.80
b_H	(Decay Rate)	1/day	0.40	0.20	0.50
K_{O2}	(Oxygen Inhibition)	g O_2/m^3	0.20	0.20	0.20
K_F	(Growth on S_F)	g COD/m^3	4.00	4.00	2.00
K_{fe}	(Fermentation of S_F)	g COD/m^3	4.00	4.00	4.00
K_A	(Growth on S_A)	g COD/m^3	4.00	4.00	2.00
K_{NO3}	(Anoxic Growth)	g N/m^3	0.50	0.50	0.50
K_{NH4}	(Nitrogen Inhibition)	g N/m^3	0.05	0.05	0.05
K_P	(Phosphorus Inhibition)	g P/m^3	0.01	0.01	0.01
K_{ALK}	(Alkalininty Inhibition)	mole HCO_3^-/m^3	0.10	0.10	0.10
Phosphorus Accumulating Organisms: X_{PAO}					
q_{PHA}	(X_{PHA} Storage Rate)	g X_{PHA}/(g X_{PAO}*d)	3.00	2.00	6.00
q_{PP}	(X_{PP} Storage Rate)	g X_{PP}/(g X_{PAO}*d)	1.50	1.00	1.18
μ_{PAO}	(Max Growth Rate)	1/day	1.00	0.67	0.79
n_{NO3}	(Anoxic Reduction Factor)		0.60	0.60	0.60
b_{PAO}	(X_{PAO} Decay Rate)	1/day	0.20	0.10	0.10
b_{PP}	(X_{PP} Decay Rate)	1/day	0.20	0.10	0.10
b_{PHA}	(X_{PHA} Decay Rate)	1/day	0.20	0.10	0.10
K_{O2}	(Oxygen Inhibition)	g O_2/m^3	0.20	0.20	0.20
K_{NO3}	(Anoxic Growth)	g N/m^3	0.50	0.50	0.50
K_A	(Growth on S_A)	g COD/m^3	4.00	4.00	2.00
K_{NH4}	(Nitrogen Inhibition)	g N/m^3	0.05	0.05	0.0050
K_{PS}	(Phosphorus Inhibition of PP)	g P/m^3	0.20	0.20	0.20
K_P	(Phosphorus Inhibition of Growth)	g P/m^3	0.01	0.01	0.0050
K_{ALK}	(Alkalininty Inhibition)	mole HCO_3^-/m^3	0.10	0.10	0.10
K_{PP}	(Polyphosphate Inhibition)	g X_{PP}/g X_{PAO}	0.01	0.01	0.02
K_{MAX}	(Max Ratio of X_{PP}/X_{PAO})	g X_{PP}/g X_{PAO}	0.34	0.34	0.34
K_{IPP}	(Inhibition of PP Storage)	g X_{PP}/g X_{PAO}	0.02	0.02	0.02
K_{PHA}	(Saturation for PHA)	g X_{PHA}/g X_{PAO}	0.01	0.01	0.01
Autotrophic Organisms: X_{AUT}					
μ_{AUT}	(Maximum Growth Rate)	1/day	1.00	0.35	0.42
b_{AUT}	(Decay Rate)	1/day	0.15	0.05	0.04
K_{O2}	(Oxygen Inhibition)	g O_2/m_3	0.50	0.50	0.50
K_{NH4}	(Nitrogen Inhibition: SUBSTRATE)	g N/m^3	1.00	1.00	0.49
K_{ALK}	(Alkalininty Inhibition)	mole HCO_3^-/m^3	0.50	0.50	0.01
K_P	(Phosphorus Inhibition of Growth)	g P/m^3	0.01	0.01	0.0050
Precipitation					
k_{PRE}	(Rate of Phosphorus Precipitation)	m^3/(g $Me(OH)_3$*d)	1.00	1.00	2.00
k_{RED}	(Rate of Phosphous Redissolution)	1/day	0.60	0.60	0.10
K_{ALK}	(Alkalininty Inhibition)	mole HCO_3^-/m^3	0.50	0.50	0.50
Methanol Degrading Organisms - Population					
μ_{M1}	(Maximum Growth Rate)	1/day	3.88		7.00
n_{NO3M1}	(Anoxic Reduction Factor)		0.21		0.20
b_{M1}	(Decay Rate)	1/day	0.18		0.20
K_{O2M1}	(Oxygen Inhibition)	g O_2/m^3	0.20		0.50
K_{M1}	(Growth on Methanol)	g COD/m^3	4.00		4.00
K_{NO3M1}	(Anoxic Growth)	g N/m^3	0.50	0.50	0.80
K_{NH4M1}	(Nitrogen Inhibition)	g N/m^3	0.05		0.05
K_{ALKM1}	(Alkalinity Inhibition)	mole HCO_3^-/m^3	0.10		0.10
K_{PM1}	(Phosphorus Inhibition)	g P/m^3	0.01		0.01
Methanol Degrading Organisms - Population 2					
μ_{M2}	(Maximum Growth Rate)	1/day	1.72		7.00
n_{NO3M2}	(Anoxic Reduction Factor)		0.76		0.80
b_{M2}	(Decay Rate)	1/day	0.25		0.25
K_{O2M2}	(Oxygen Inhibition)	g O_2/m^3	0.20		0.50
K_{M2}	(Growth on Methanol)	g COD/m^3	4.00		1.00
K_{NO3M2}	(Anoxic Growth)	g N/m^3	0.50	0.50	0.50
K_{NH4M2}	(Nitrogen Inhibition)	g N/m^3	0.05		0.05
K_{ALKM2}	(Alkalinity Inhibition)	mole HCO_3^-/m^3	0.10		0.10
K_{PM2}	(Phosphorus Inhibition)	g P/m^3	0.01		0.01

This document is the property of CH2M HILL, Inc.
The expression of the information contained in thi
document is protected under U.S. copyright law.

Mass Balance for Average Flow Conditions

Constituent	Raw Wastewater (RW)	Main Recycle Influent (RecyI)	Main Recycled Stream (Recycle)	Main Combined Recycle Effluent (RecyE)	Main Bioreactor Influent (BI)	Main Secondary Clarifier Influent (SI)	Main Secondary Clarifier Effluent (SE)	Plant Effluent (PLE)	Main WAS	GBT WAS Thickener Influent (TWASI)	GBT Thickened WAS (TWAS)	AerDig1 Aerobic Digester Influent (ADI)	AerDig1 Aerobic Digester Effluent (ADE)	BFP Dewatering Influent (DWI)	BFP Dewatered Sludge (DWE)	Biosolids to Dispoal	GBT WAS Thickening Recycle (TWASR)	BFP Dewatering Recycle (DWR)	Recy Combined Discharge	Ender
Flow (m3/day)	143	143	13	156	156	228	143	143	13	13	5	5	5	5	0	0	8	5	13	
Carbonaceous BOD_5 (kg/day)	115	115	5	120	120	209	1	1	33	33	28	28	8	8	7	7	5	0	5	
COD (kg/day)	225	225	17	243	243	628	9	9	98	98	83	83	46	46	43	43	15	2	17	
TSS (kg/day)	130	130	21	150	150	753	2	2	119	119	101	101	61	61	58	58	18	3	21	
VSS (kg/day)	97	97	12	109	109	435	1	1	69	69	58	58	32	32	30	30	10	2	12	
TKN (kg-N/day)	21	21	1	23	23	33	1	1	5	5	4	4	3	3	3	3	1	1	1	
NH_3-N (kg-N/day)	13	13	0	13	13	0	0	0	0	0	0	0	0	0	0	0	0	0	0	
NO_3-N (kg-N/day)	0	0	1	1	1	3	2	2	0	0	0	0	1	1	0	0	0	1	1	
TP (kg-P/day)	4	4	5	9	9	45	2	2	7	7	6	6	6	6	2	2	1	4	5	
Alkalinity (kg/day as $CaCO_3$)	143	143	6	149	149	163	102	102	10	10	4	4	0	0	0	0	6	0	6	
H_2S (kg/day)	3	3	0	3	3	0	0	0	0	0	0	0	0	0	0	0	0	0	0	
BOD_5 (mg/L)	803	803	405	770	770	917	5	5	2,451	2,451	5,550	5,550	1,503	1,503	24,924	24,924	589	80	405	
COD (mg/L)	1,574	1,574	1,331	1,554	1,554	2,759	60	60	7,293	7,293	16,457	16,457	9,053	9,053	149,470	149,470	1,788	525	1,331	
TSS (mg/L)	906	906	1,585	963	963	3,304	15	15	8,831	8,831	20,000	20,000	12,054	12,054	200,000	200,000	2,121	639	1,585	
VSS (mg/L)	680	680	904	699	699	1,909	9	9	5,102	5,102	11,556	11,556	6,342	6,342	105,227	105,227	1,225	336	904	
TKN (mg-N/L)	149	149	100	145	145	147	4	4	388	388	875	875	612	612	8,906	8,906	95	108	100	
NH_3-N (mg-N/L)	89	89	28	84	84	0	0	0	0	0	0	0	77	77	77	77	0	77	28	
NO_3-N (mg-N/L)	0	0	112	9	9	13	13	13	13	13	13	13	289	289	289	289	13	289	112	
TP (mg-P/L)	25	25	375	55	55	199	12	12	512	512	1,145	1,145	1,145	1,145	6,733	6,733	131	806	375	
Alkalinity (mg/L as CaCO3)	999	999	458	954	954	718	716	718	718	718	718	718	0	0	0	0	718	0	458	
H_2S (mg/L)	24	24	0	22	22	0	0	0	0	0	0	0	0	0	0	0	0	0	0	

Mass Balance for Diurnal Peak Flow Conditions

Constituent	Raw Wastewater (RW)	Main Recycle Influent (RecyI)	Main Recycled Stream (Recycle)	Main Combined Recycle Effluent (RecyE)	Main Bioreactor Influent (BI)	Main Secondary Clarifier Influent (SI)	Main Secondary Clarifier Effluent (SE)		Main WAS	GBT WAS Thickener Influent (TWASI)	GBT Thickened WAS (TWAS)	AerDig1 Aerobic Digester Influent (ADI)	AerDig1 Aerobic Digester Effluent (ADE)	BFP Dewatering Influent (DWI)	BFP Dewatered Sludge (DWE)		GBT WAS Thickening Recycle (TWASR)	BFP Dewatering Recycle (DWR)	Recy Combined Discharge	
Flow (m3/day)	205	205	20	225	225	368	204	204	20	20	7	7	7	7	0	0	13	7	20	
Carbonaceous BOD_5 (kg/day)	149	149	8	157	157	254	1	1	32	32	41	41	11	11	11	11	7	1	8	
COD (kg/day)	293	293	26	318	318	1,162	12	12	143	143	121	121	67	67	63	63	22	4	26	
TSS (kg/day)	167	167	30	198	198	1,399	4	4	174	174	148	148	89	89	84	84	26	4	30	
VSS (kg/day)	126	126	17	143	143	807	2	2	100	100	85	85	47	47	44	44	15	2	17	
TKN (kg/day)	28	28	2	30	30	60	1	1	7	7	6	6	5	5	4	4	1	1	2	
NH_3-N (kg-N/day)	17	17	1	17	17	0	0	0	0	0	0	0	1	1	0	0	0	1	1	
NO_3-N (kg-N/day)	0	0	2	2	2	4	2	2	0	0	0	0	2	2	0	0	0	2	2	
TP (kg-P/day)	5	5	7	12	12	90	1	1	11	11	9	9	8	8	3	3	2	6	7	
Alkalinity (kg/day as $CaCO_3$)	186	186	7	192	192	186	103	103	10	10	4	4	0	0	0	0	7	0	7	
H_2S (kg/day)	4	4	0	4	4	0	0	0	0	0	0	0	0	0	0	0	0	0	0	
BOD_5 (mg/L)	729	729	393	699	699	692	4	4	1,551	1,551	5,583	5,583	1,503	1,503	24,924	24,924	561	80	393	
COD (mg/L)	1,430	1,430	1,283	1,417	1,417	3,161	60	60	7,037	7,037	16,426	16,426	9,053	9,053	149,470	149,470	1,690	525	1,283	
TSS (mg/L)	818	818	1,531	882	882	3,806	20	20	8,537	8,537	20,000	20,000	12,054	12,054	200,000	200,000	2,010	639	1,531	
VSS (mg/L)	614	614	872	637	637	2,196	12	12	4,925	4,925	11,537	11,537	6,342	6,342	105,227	105,227	1,159	336	872	
TKN (mg-N/L)	135	135	110	133	133	164	5	5	364	364	848	848	612	612	8,906	8,906	89	108	110	
NH_3-N (mg-N/L)	81	81	28	76	76	1	1	1	1	1	1	1	77	77	77	77	1	77	28	
NO_3-N (mg-N/L)	0	0	108	10	10	11	11	11	11	11	11	11	289	289	289	289	11	289	108	
TP (mg-P/L)	0	23	367	54	54	245	5	5	544	544	1,271	1,271	1,145	1,145	6,733	6,733	131	806	367	
Alkalinity (mg/L as CaCO3)	908	908	328	857	857	505	505	505	505	505	505	505	0	0	0	0	505	0	328	
H_2S (mg/L)	22	22	0	20	20	0	0	0	0	0	0	0	0	0	0	0	0	0	0	

This document is the property of CH2M HILL, Inc.
The expression of the information contained in this
document is protected under U.S. copyright law.

AerDig1

Aerobic Digester Module

Average Conditions

Constituent	Influent	Effluent	
Flow (m3/day)	5	5	
Carbonaceous BOD_5 (kg/day	28	8	
Particulate	3	6	
Heterotrophs	20	1	
PAOs	5	1	
PHA	0	0	
Filtrate	0	0	
COD (kg/day)	83	46	
Particulate Bio	2	0	
Particulate Non-Bio	28	28	
Decay Prod Aer/Anx	3	11	
Decay Prod Anaerobic	0	0	
Heterotrophs	33	2	
Autotrophs	2	1	
PAOs	15	4	
PHA	0	0	
Soluble Bio	0	0	
VFA	0	0	
Colloidal Bio	0	0	
Soluble Non-Bio	0	0	
Colloidal Non-Bio	0	0	
TSS (kg/day)	101	61	
Biodegradable	2	0	
Non-Biodegradable	44	44	
Decay Prod Aer/Anx	2	9	
Decay Prod Anaerobic	0	0	
Metal Hydroxide	0	0	
Metal Phosphate	0	0	
Heterotrophs	26	2	
Autotrophs	2	0	
PAOs	12	3	
PHA	0	0	
Poly-P	14	4	
VSS (kg/day)	58	32	
Biodegradable	1	0	
Non-Biodegradable	20	20	
Decay Prod Aer/Anx	2	8	
Decay Prod Anaerobic	0	0	
Metal Hydroxide	0	0	
Heterotrophs	23	1	
Autotrophs	2	0	
PAOs	10	3	
PHA	0	0	
TKN (kg-N/day)	4	3	
NH_3-N (kg-N/day)	0	0	
Particulate Bio Org N	0	0	
Non-Bio Part Org N	1	2	
Decay Prod Aer/Anx	0	1	
Decay Prod Anaerobic	0	0	
Heterotrophs	2	0	
Autotrophs	0	0	
PAOs	1	0	
Non-Bio Soluble Org. N	0	0	
Non-Bio Colloidal Org. N	0	0	
Soluble Bio Org N	0	0	
Colloidal Bio Org N	0	0	
NO_3-N (kg-N/day)	0	1	
TP (kg-P/day)	6	6	
Bio Particulate	0	0	
Non-Bio Particulate	0	0	
Decay Prod Aer/Anx	0	0	
Decay Prod Anaerobic	0	0	
Metal Phosphate	0	0	
Heterotrophs	1	0	
Autotrophs	0	0	
PAOs	0	0	
Poly-P	4	1	
Ortho-PO_4	0	4	
Alkalinity (kg/day as $CaCO_3$)	4	0	
H_2S (kg/day)	0	0	
BOD_5 (mg/L)	5,550	1,503	
COD (mg/L)	16,457	9,053	
TSS (mg/L)	20,000	12,054	
VSS (mg/L)	11,556	6,342	
TKN (mg-N/L)	875	612	
NH_3-N (mg-N/L)	0	77	
NO_3-N (mg-N/L)	13	289	
TP (mg-P/L)	1,145	1,145	
Alkalinity (mg/L as CaCO3)	718	0	
H_2S (mg/L)	0	0	

Constituent	Influent	Effluent
Flow (m3/day)	5	5
Carbonaceous BOD_5 (kg/day)	28	8
Particulate	3	6
Heterotrophs	20	1
PAOs	5	1
PHA	0	0
Filtrate	0	0
COD (kg/day)	83	46
Particulate Bio	2	0
Particulate Non-Bio	28	28
Decay Prod Aer/Anx	3	11
Decay Prod Anaerobic	0	0
Heterotrophs	33	2
Autotrophs	2	1
PAOs	15	4
PHA	0	0
Soluble Bio	0	0
VFA	0	0
Colloidal Bio	0	0
Soluble Non-Bio	0	0
Colloidal Non-Bio	0	0
TSS (kg/day)	101	61
Biodegradable	2	0
Non-Biodegradable	44	44
Decay Prod Aer/Anx	2	9
Decay Prod Anaerobic	0	0
Metal Hydroxide	0	0
Metal Phosphate	0	0
Heterotrophs	26	2
Autotrophs	2	0
PAOs	12	3
PHA	0	0
Poly-P	14	4
VSS (kg/day)	58	32
Biodegradable	1	0
Non-Biodegradable	20	20
Decay Prod Aer/Anx	2	8
Decay Prod Anaerobic	0	0
Metal Hydroxide	0	0
Heterotrophs	23	1
Autotrophs	2	0
PAOs	10	3
PHA	0	0
TKN (kg-N/day)	4	3
NH_3-N (kg-N/day)	0	0
Particulate Bio Org N	0	0
Non-Bio Part Org N	1	2
Decay Prod Aer/Anx	0	1
Decay Prod Anaerobic	0	0
Heterotrophs	2	0
Autotrophs	0	0
PAOs	1	0
Non-Bio Soluble Org. N	0	0
Non-Bio Colloidal Org. N	0	0
Soluble Bio Org N	0	0
Colloidal Bio Org N	0	0
NO_3-N (kg-N/day)	0	1
TP (kg-P/day)	6	6
Bio Particulate	0	0
Non-Bio Particulate	0	0
Decay Prod Aer/Anx	0	0
Decay Prod Anaerobic	0	0
Metal Phosphate	0	0
Heterotrophs	1	0
Autotrophs	0	0
PAOs	0	0
Poly-P	4	1
Ortho-PO_4	0	4
Alkalinity (kg/day as $CaCO_3$)	4	0
H_2S (kg/day)	0	0

This document is the property of CH2M HILL, Inc.
The expression of the information contained in thi
document is protected under U.S. copyright law.

Facility Operating Parameters		
Bioreactor Volume, m3		361.47
Minimum Valid SRT, days		3.00
SRT, Days		71.70
Temperature, oC		14
Volatile Solids Loading (kg VSS/m3-day)		0.16
Volatile Solids Reduction, %		45.12%
TSS Reduction %		39.73%
SOUR mg-O2/(g-VSS x hour) at 20 oC		0.67
SOUR mg-O2/(g-TSS x hour) at 20 oC		0.35
SOUR mg-O2/(g-VSS x hour) with nitrification at 20 oC		0.94
SOUR mg-O2/(g-TSS x hour) with nitrification at 20 oC		0.49
Total AOR (kgO2/day)		44
% denitrification		20%
Nutrients		
Nitrogen Released Due to Digestion (transformed to NH3) (kg/day)		2.14
Nitrogen Nitrified (Kg/day)		1.76
Nitrogen Denitrified (Kg/day)		0.36
Alkalinity in Feed (Kg/day)		4
Alkalinity Released Due to Digestion (Kg/day)		8
Alkalinity Lost Through Nitrification (Kg/day)		13
Alkalinity Produced Through Denitrification (Kg/day)		1
Alkalinity Discharged (Kg/day		0
Kinetic Limitation on Nitrification		
DO, mg/L		2
Maximum Specific Growth Rate (μ_{Nmax}), Day^{-1} at Operational DO		0.3408
Ammonia in Digester Effluent Due to Kinetic Limitations		
	a	0.28
	b	-871.55
	c	12.26
Effluent Ammonia (mg-N/L) for Kinetic Limitation		0.01
Potential Nitrification Associated with Kinetics (Kg/day)		2.14

Aerobic Biological Kinetics	
Parameter	**Temperature**
Heterotrophs	
Maximum Specific Growth Rate (μ_{Hmax}), Day^{-1}	2.60
Half Saturation for Organics (K_S), mg BOD_5/L	3.13
Half Saturation for Organics (K_S), mg Bio COD/L	5.00
True Yield (Y_H), mg COD/mg COD (aerobic)	0.67
Decay Rate (b_H), Day^{-1}	0.22
Inactive Fraction (f_D)	0.19
Volatile Fraction, % of TSS	0.90
COD/VSS Ratio, mg COD/mg VSS	1.42
Nitrogen Content, N/VSS (%)	0.09
Phosphorus Content, P/VSS (%	0.03
Autotrophs	
Maximum Specific Growth Rate (μ_{Nmax}), Day^{-1}	0.43
Half Saturation for NH_3-N (K_N), mg-N/L	0.49
Half Saturation for O_2 (K_O), mg-O_2/L	0.50
True Yield (Y_A), mg TSS/mg NH_3-N	0.15
True Yield (Y_A), mg COD/mg NH_3-N	0.19
Decay Rate (b_A), Day^{-1}	0.04
Volatile Fraction, % of TSS	0.90
COD/VSS Ratio, mg COD/mg VSS	1.42
Nitrogen Content, N/VSS (%)	0.09
Phosphorus Content, P/VSS (%	0.03
PAOs	
True Yield (Y_H), mg TSS/mg BOD_5	0.76
True Yield (Y_H), mg COD/mg COD	0.62
Decay Rate (b_H), Day^{-1}	0.04
Inactive Fraction (f_D)	0.19
Volatile Fraction, % of TSS	0.90
COD/VSS Ratio, mg COD/mg VSS	1.42
Nitrogen Content, N/VSS (%)	0.09
Phosphorus Content, P/VSS (%)	0.03
TSS Content of Poly-F	3.23

This document is the property of CH2M HILL, Inc.
The expression of the information contained in th
document is protected under U.S. copyright law.

Diurnal Peak Flow Conditions

Constituent	Influent	Effluent	
Flow (m3/day)	7	7	
Carbonaceous BOD_5 (kg/day	41	11	
Particulate	14	9	
Heterotrophs	20	2	
PAOs	7	1	
PHA	0	0	
Filtrate	0	0	
COD (kg/day)	121	67	
Particulate Bio	3	0	
Particulate Non-Bio	42	41	
Decay Prod Aer/Anx	21	16	
Decay Prod Anaerobic	0	0	
Heterotrophs	33	3	
Autotrophs	2	1	
PAOs	20	5	
PHA	0	0	
Soluble Bio	0	0	
VFA	0	0	
Colloidal Bio	0	0	
Soluble Non-Bio	0	0	
Colloidal Non-Bio	0	0	
TSS (kg/day)	148	89	
Biodegradable	2	0	
Non-Biodegradable	62	64	
Decay Prod Aer/Anx	17	12	
Decay Prod Anaerobic	0	0	
Metal Hydroxide	0	0	
Metal Phosphate	0	0	
Heterotrophs	26	2	
Autotrophs	2	1	
PAOs	15	4	
PHA	0	0	
Poly-P	24	5	
VSS (kg/day)	85	47	
Biodegradable	2	0	
Non-Biodegradable	30	29	
Decay Prod Aer/Anx	15	11	
Decay Prod Anaerobic	0	0	
Metal Hydroxide	0	0	
Heterotrophs	23	2	
Autotrophs	2	1	
PAOs	14	4	
PHA	0	0	
TKN (kg-N/day)	6	5	
NH_3-N (kg-N/day)	0	1	
Particulate Bio Org N	0	0	
Non-Bio Part Org N	2	2	
Decay Prod Aer/Anx	1	1	
Decay Prod Anaerobic	2	0	
Heterotrophs	2	0	
Autotrophs	0	0	
PAOs	1	0	
Non-Bio Soluble Org. N	0	0	
Non-Bio Colloidal Org. N	0	0	
Soluble Bio Org N	0	0	
Colloidal Bio Org N	0	0	
NO_3-N (kg-N/day)	0	2	
TP (kg-P/day)	9	8	
Bio Particulate	0	0	
Non-Bio Particulate	0	1	
Decay Prod Aer/Anx	0	0	
Decay Prod Anaerobic	0	0	
Metal Phosphate	0	0	
Heterotrophs	1	0	
Autotrophs	0	0	
PAOs	0	0	
Poly-P	8	2	
Ortho-PO_4	0	6	
Alkalinity (kg/day as $CaCO_3$)	4	0	
H_2S (kg/day)	0	0	
BOD_5 (mg/L)	5,583	1,503	
COD (mg/L)	16,426	9,053	
TSS (mg/L)	20,000	12,054	
VSS (mg/L)	11,537	6,342	
TKN (mg-N/L)	848	612	
NH_3-N (mg-N/L)	1	77	
NO_3-N (mg-N/L)	11	289	
TP (mg-P/L)	1,271	1,145	
Alkalinity (mg/L as CaCO3)	505	0	
H_2S (mg/L)	0	0	

This document is the property of CH2M HILL, Inc.
The expression of the information contained in thi
document is protected under U.S. copyright law.

Model Results Summary for Alternative 4, Plant 3 Conventional WWTP

Projected 2028 Average Daily Flow = 598 m^3/day

Projected 2028 Maximum Month Flow = 837 m^3/day

Estimated Equipment Sizing:

- 3 process reactors at 700 m^3 each
- 2 circular clarifiers at 5 m diameter each
- 2,078 m^3 total aerobic digester volume

Use Instructions: See Comment in this cell.

Linked Model Input	Current Run:	Comments	Scenarios	Comments		Comments		Comments		Comments
Flow (m3/day)	837	MM	837	MM	837	MM	598	AD Flow	628	75% of MM
Diurnal Flow Peaking Factor	1.43	MxD:MM	1.43	MxD:MM	1.43	MxD:MM	2	MxD:AD	1.43	Same as MxD:MM
CBOD5 (kg/day)	669	MM loading	669	MM loading	669	MM loading	478	AD Loading	502	75% of MM
TSS (kg/day)	753	MM loading	753	MM loading	753	MM loading	538	AD Loading	565	75% of MM
% VS	75%		75%		75%		75%		75%	
TKN (kg/day)	126	MM loading	126	MM loading	126	MM loading	90	AD Loading	94	75% of MM
Ammonia -N (kg/day)	75	MM loading	75	MM loading	75	MM loading	54	AD Loading	56	75% of MM
Total Phosphate - P (kg/day)	21	MM loading	21	MM loading	21	MM loading	15	AD Loading	16	75% of MM
Alkalinity (kg/day)	837	Assumed at 1000 mg/L	837	Assumed at 1000 mg/L	837	Assumed at 1000 mg/L	598	Assumed at 1000 mg/L	628	Assumed at 1000 mg/L
Hydrogen Sulfide (kg/day)	20	Assumed at 24 mg/L	20	Assumed at 24 mg/L	20	Assumed at 24 mg/L	14	Assumed at 24 mg/L	16	Assumed at 24 mg/L
Number of Aeration Basin Trains Online	3		3		3		3		3	
Volume per Train (m3)	700		700		700		700		700	
Total Aeration Basin Volume in Service (m3)	2101		2101		2101		2101		2101	
SRT	10		10		10		10		10	
System pH	7.2		7.2		7.2		7.2		7.2	
Temperature °C	14	Minimum Month	14	Minimum Month	24.6	Maximum month	16.8	Annual average	14	Minimum Month
Nitrified Recycle Rate (% of Aer Basin influent flow)	595%		620%		620%		590%		595%	
Number of Secondary Clarifiers Online	2		2		2		2		1	
Surface Area per Secondary Clarifier (sq m)	23		23		23		23		23	
Total Secondary Clarifier Area (sq m)	46		46		46		46		23	
Secondary Clarifier Diameter (m)	5		5		5		5		5	
SVI (mL/g)	150		150		150		150		150	
Average Secondary Effluent TSS (mg/L)	15	Fixed	15	Fixed	15	Fixed	15	Fixed	15	Fixed
Peak Secondary Effluent TSS (mg/L)	20	Fixed	20	Fixed	20	Fixed	20	Fixed	20	Fixed
Average RAS Underflow Rate (% of Inf Q)	45.8%	Calculated	45.8%	Calculated	45.8%	Calculated	44.1%	Calculated	44.4%	Calculated
Peak RAS Underflow Rate (% of Inf Q)	57.3%	Calculated	57.3%	Calculated	56.5%	Calculated	42.7%	Calculated	55.9%	Calculated
Thickener Solids Capture (%)	85%		85%		85%		85%		85%	
Thickened Sludge Concentration (mg/L)	20,000		20,000		20,000		20,000		20,000	
AerDig1 Volume (m3)	2,078		2,078		2,078		2,078		2,078	
AerDig1 Temperature (°C)	14	Minimum Month	14	Minimum Month	24.6	Maximum month	16.8	Annual average	14	Minimum Month
AerDig1 DO (mg/L)	2		2		2		2		2	
AerDig1 % Denitrification	20%		20%		20%		20%		20%	
Dewatering Solids Capture (%)	95%		95%		95%		95%		95%	
Dewatered Sludge Concentration (%)	20%		20%		20%		20%		20%	
Results										
SRT	10.0		10.0		10.0		10.0		10.0	
Final Anoxic Zone NO3	0.12	want < 0.5	0.13	want < 0.5	0.06	want < 0.5	0.09	want < 0.5	0.11	want < 0.5
Secondary Effluent TSS (mg/L)	15.0	want < 60 (goal = 42)	15.0	want < 60 (goal = 42)	15.0	want < 60 (goal = 42)	15.0	want < 60 (goal = 42)	15.0	want < 60 (goal = 42)
Secondary Effluent CBOD5 (mg/L)	4.70	want < 60 (goal = 42)	4.71	want < 60 (goal = 42)	4.02	want < 60 (goal = 42)	4.45	want < 60 (goal = 42)	4.61	want < 60 (goal = 42)
Secondary Effluent COD (mg/L)	60.3	want < 150, (goal = 105.0)	60.3	want < 150, (goal = 105.0)	59.4	want < 150, (goal = 105.0)	60.0	want < 150, (goal = 105.0)	60.1	want < 150, (goal = 105.0)
Secondary Effluent TN (mg/L)	16.5	want < 70, (goal = 49.0)	16.1	want < 70, (goal = 49.0)	16.0	want < 70, (goal = 49.0)	16.2	want < 70, (goal = 49.0)	16.2	want < 70, (goal = 49.0)
Secondary Effluent NH3-N (mg/L)	0.15		0.15		0.08		0.09		0.15	
Secondary Effluent NO3-N (mg/L)	12.875	want < 18 (goal is 12.6)	12.468	want < 18 (goal is 12.6)	12.484	want < 18 (goal is 12.6)	12.571	want < 18 (goal is 12.6)	12.527	want < 18 (goal is 12.6)
Secondary Effluent TP (mg/L)	11.51	want < 15 (goal = 10.5)	11.78	want < 15 (goal = 10.5)	7.49	want < 15 (goal = 10.5)	12.23	want < 15 (goal = 10.5)	12.62	want < 15 (goal = 10.5)
Influent COD (mg/L)	1,570	~1320 mg/L per ops data	1,570	~1320 mg/L per ops data	1,570	~1320 mg/L per ops data	1,570	~1320 mg/L per ops data	1,570	~1320 mg/L per ops data
Corresponding Average MLSS (mg/L)	3,348	want < 3400 at MM	3,341	want < 3400 at MM	3,399	want < 3400 at MM	2,426	want < 3400 at MM	2,536	want < 3400 at MM
Secondary Influent MLSS (mg/L)	3,328		3,322		3,382		2,408		2,517	
Nitrified Recycle Rate (m3/day)	5,433		5,661		5,661		4,001		4,209	
Solids Loading Rate To Secondary Clarifiers (kg/day-sq m)	95.45		95.25		96.96		50.66		110.71	
RAS Rate (m3/day)	418.93		418.62		418.62		299.01		313.96	
Corresponding WAS (kg/day)	691		689		702		501		523	
Combined Thickened Feed Sludge to Aerobic Dig. (kg/day)	587		586		596		426		445	
Digester Volatile Solids Loading Rate (kg/day-m3)	0.16		0.16		0.15		0.11		0.12	
SRT	70.78		70.92		69.69		97.65		93.43	
Model Prediction of VS Destruction (combined)	44.95%		44.90%		42.95%		46.07%		46.31%	
Digester Alkalinity Limited?	yes		yes		yes		yes		yes	
SOUR in Digester (mg O2/hour/gram TS)	0.36	want < 1.5 at 20 C, goal = 1.13	0.35	want < 1.5 at 20 C, goal = 1.13	0.32	want < 1.5 at 20 C, goal = 1.13	0.27	want < 1.5 at 20 C, goal = 1.13	0.29	want < 1.5 at 20 C, goal = 1.13
Dewatered Solids From Plant (kg/day)	337		337		339		234		247	
PBNR AOR (kg/day)	1,021		1,020		1,059		736		764	
PBNR SOR (kg/day)	2,986		2,978		3,551		2,028		2,056	
PBNR Total Required Air Rate in Zones 3-5 (N*m3/hr)	1,433		1,429		1,741		1,046		1,036	

This document is the property of CH2M HILL, Inc.
The expression of the information contained in this
document is protected under U.S. copyright law.

Stoichiometric Parameters		Value	Default	Units
Hydrolysis of Particulate Substrate: X_S				
Production of Soluble Inert COD: S_I	f_{SI}	0.00		g COD/g COD
Heterotrophic Organisms: X_H				
Yield	Y_H	0.6660		g COD/g COD
Fraction of Lysis Inerts	f_{XI}	0.08		g COD/g COD
Phosphorus Accumulating Organisms: X_{PAO}				
Yield (biomass/PHA)	Y_{PAO}	0.6250		g COD/g COD
Phosphate release per PHA Store	Y_{PO4}	0.40		g P/g COD
PHA requirement for PP storage	Y_{PHA}	0.20		g COD/g P
Fraction of Lysis Inerts	f_{XI}	0.08		g COD/g COD
Autotrophic Organisms: X_{AUT}				
Yield per NO_3-N	Y_A	0.19		g COD/g N
Fraction of Lysis Inerts	f_{XI}	0.08		g COD/g COD
Methanol Degraders-Population 1: X_{M1}				
Yield per MeOH COD	Y_{M1}	0.58		g COD/g COD
Fraction of Lysis Inerts	f_{XI}	0.10		g COD/g COD
Methanol Degraders-Population 2: X_{M2}				
Yield per MeOH COD	Y_{M2}	0.36		g COD/g COD
Fraction of Lysis Inerts	f_{XI}	0.10		g COD/g COD

Conversion Factors for Conservation Equatio		Value	Default	Units
Nitrogen Content of:	Check Delta	0.00		
Soluble Inert COD: S_I	i_{NSI}	0.0600	0.01	g N/g COD
Fermentable Substrate: S_F	i_{NSF}	0.0393	0.03	g N/g COD
Inert Particulate COD: X_I	i_{NXI}	0.0402	0.02	g N/g COD
Slowly Biodegradable Substrate: X_S	i_{NXS}	0.0393	0.04	g N/g COD
Biomass: X_H, X_{PAO}, X_{AUT}, X_{m1}, X_{m2}	i_{NBM}	0.0606	0.07	g N/g COD
Decay Products:, $X_{d,aa}$	i_{NXdaa}	0.0606	0.02	g N/g COD
Phosphorus Content of:	Check Delta	0.00		
Soluble Inert COD: S_I	i_{PSI}	0.0000	0.00	g P/g COD
Fermentable Substrate: S_F	i_{PSF}	0.0000	0.01	g P/g COD
Inert Particulate COD: X_I	i_{PXI}	0.0073	0.01	g P/g COD
Slowly Biodegradable Substrate: X_S	i_{PXS}	0.0053	0.01	g P/g COD
Biomass: X_H, X_{PAO}, X_{AUT}	i_{PBM}	0.0200	0.02	g P/g COD
Decay Products:, $X_{d,aa}$	i_{PXdaa}	0.0200	1.02	g P/g COD
TSS to COD Ratio for:				
Inert Particulate COD: X_I	i_{TSSXI}	0.7825	0.75	g TSS/g COD
Slowly Biodegradable Substrate: X_S	i_{TSSXS}	0.7825	0.75	g TSS/g COD
Biomass: X_H, X_{PAO}, X_{AUT}, X_{m1}, X_{m2}	i_{TSSBM}	0.7825	0.90	g TSS/g COD
Decay Products: $X_{d,aa}$	$i_{TSSXdaa}$	0.7825	0.75	g TSS/g COD

Nitrogen Ratio Adjustment			Ratio
Fermentable Substrate: S_F	i_{NSF}	0.0393	
Slowly Biodegradable Substrate: X_S	i_{NXS}	0.0393	1.00
Alternate Nitrogen Ratio			
Fermentable Substrate: S_F	i_{NSF}	0.0536	
Slowly Biodegradable Substrate: X_S	i_{NXS}	0.0357	1.50

Kinetic Parameters		Unit	Typical Values 20 °C	Typical Values 10 °C	Temperature 14.0 deg. C
Hydrolysis of Particulate Substrate: X_S					
k_h	(Hydrolysis Rate)	1/day	3.00	2.00	2.35
n_{NO3}	(Anoxic Reduction Factor)		0.60	0.60	0.60
n_{fe}	(Anaerobic Reduction Factor)		0.40	0.40	0.40
K_{O2}	(Oxygen Inhibition)	g O_2/m^3	0.20	0.20	0.20
K_{NO3}	(Nitrate Inhibition)	g N/m^3	0.50	0.50	0.50
K_x	(Particulate Inhibition)	g COD/g COD	0.10	0.10	0.10
Hydrolysis of Decay Products: X_{daa}					
K_{hdaa}	(Hydrolysis Rate)	1/d	1.20		0.94
K_{O2Ydaa}	(Oxygen Inhibition)	g O_2/m^3	0.10		0.10
$K_{NO3Ydaa}$	(Nitrate Inhibition)	g N/m^3	0.10		0.10
K_{Xdaa}	(Particulate Inhibition)	g X_{daa}/g X_H	0.10		0.10
Heterotrophic Organisms: X_H					
μ_H	(Max Growth Rate)	1/day	6.00	3.00	2.60
q_{fe}	(Max Fermentation Rate)	g COD/(g COD*d)	3.00	1.50	1.98
n_{NO3}	(Anoxic Reduction Factor)		0.80	0.80	0.80
b_H	(Decay Rate)	1/day	0.40	0.20	0.50
K_{O2}	(Oxygen Inhibition)	g O_2/m^3	0.20	0.20	0.20
K_F	(Growth on S_F)	g COD/m^3	4.00	4.00	2.00
K_{fe}	(Fermentation of S_F)	g COD/m^3	4.00	4.00	4.00
K_A	(Growth on S_A)	g COD/m^3	4.00	4.00	2.00
K_{NO3}	(Anoxic Growth)	g N/m^3	0.50	0.50	0.50
K_{NH4}	(Nitrogen Inhibition)	g N/m^3	0.05	0.05	0.05
K_P	(Phosphorus Inhibition)	g P/m^3	0.01	0.01	0.01
K_{ALK}	(Alkalininty Inhibition)	mole HCO_3^-/m^3	0.10	0.10	0.10
Phosphorus Accumulating Organisms: X_{PAO}					
q_{PHA}	(X_{PHA} Storage Rate)	g X_{PHA}/(g X_{PAO}*d)	3.00	2.00	6.00
q_{PP}	(X_{PP} Storage Rate)	g X_{PP}/(g X_{PAO}*d)	1.50	1.00	1.18
μ_{PAO}	(Max Growth Rate)	1/day	1.00	0.67	0.79
n_{NO3}	(Anoxic Reduction Factor)		0.60	0.60	0.60
b_{PAO}	(X_{PAO} Decay Rate)	1/day	0.20	0.10	0.10
b_{PP}	(X_{PP} Decay Rate)	1/day	0.20	0.10	0.10
b_{PHA}	(X_{PHA} Decay Rate)	1/day	0.20	0.10	0.10
K_{O2}	(Oxygen Inhibition)	g O_2/m^3	0.20	0.20	0.20
K_{NO3}	(Anoxic Growth)	g N/m^3	0.50	0.50	0.50
K_A	(Growth on S_A)	g COD/m^3	4.00	4.00	2.00
K_{NH4}	(Nitrogen Inhibition)	g N/m^3	0.05	0.05	0.0050
K_{PS}	(Phosphorus Inhibition of PP)	g P/m^3	0.20	0.20	0.20
K_P	(Phosphorus Inhibition of Growth)	g P/m^3	0.01	0.01	0.0050
K_{ALK}	(Alkalininty Inhibition)	mole HCO_3^-/m^3	0.10	0.10	0.10
K_{PP}	(Polyphosphate Inhibition)	g X_{PP}/g X_{PAO}	0.01	0.01	0.02
K_{MAX}	(Max Ratio of X_{PP}/X_{PAO})	g X_{PP}/g X_{PAO}	0.34	0.34	0.34
K_{IPP}	(Inhibition of PP Storage)	g X_{PP}/g X_{PAO}	0.02	0.02	0.02
K_{PHA}	(Saturation for PHA)	g X_{PHA}/g X_{PAO}	0.01	0.01	0.01
Autotrophic Organisms: X_{AUT}					
μ_{AUT}	(Maximum Growth Rate)	1/day	1.00	0.35	0.42
b_{AUT}	(Decay Rate)	1/day	0.15	0.05	0.04
K_{O2}	(Oxygen Inhibition)	g O_2/m_3	0.50	0.50	0.50
K_{NH4}	(Nitrogen Inhibition: SUBSTRATE)	g N/m^3	1.00	1.00	0.49
K_{ALK}	(Alkalininty Inhibition)	mole HCO_3^-/m^3	0.50	0.50	0.01
K_P	(Phosphorus Inhibition of Growth)	g P/m^3	0.01	0.01	0.0050
Precipitation					
k_{PRE}	(Rate of Phosphorus Precipitation)	m^3/(g $Me(OH)_3$*d)	1.00	1.00	2.00
k_{RED}	(Rate of Phosphous Redissolution)	1/day	0.60	0.60	0.10
K_{ALK}	(Alkalininty Inhibition)	mole HCO_3^-/m^3	0.50	0.50	0.50
Methanol Degrading Organisms - Population 1					
μ_{M1}	(Maximum Growth Rate)	1/day	3.88		7.00
n_{NO3M1}	(Anoxic Reduction Factor)		0.21		0.20
b_{M1}	(Decay Rate)	1/day	0.18		0.20
K_{O2M1}	(Oxygen Inhibition)	g O_2/m^3	0.20		0.50
K_{M1}	(Growth on Methanol)	g COD/m^3	4.00		4.00
K_{NO3M1}	(Anoxic Growth)	g N/m^3	0.50	0.50	0.80
K_{NH4M1}	(Nitrogen Inhibition)	g N/m^3	0.05		0.05
K_{ALKM1}	(Alkalinity Inhibition)	mole HCO_3^-/m^3	0.10		0.10
K_{PM1}	(Phosphorus Inhibition)	g P/m^3	0.01		0.01
Methanol Degrading Organisms - Population 2					
μ_{M2}	(Maximum Growth Rate)	1/day	1.72		7.00
n_{NO3M2}	(Anoxic Reduction Factor)		0.76		0.80
b_{M2}	(Decay Rate)	1/day	0.25		0.25
K_{O2M2}	(Oxygen Inhibition)	g O_2/m^3	0.20		0.50
K_{M2}	(Growth on Methanol)	g COD/m^3	4.00		1.00
K_{NO3M2}	(Anoxic Growth)	g N/m^3	0.50	0.50	0.50
K_{NH4M2}	(Nitrogen Inhibition)	g N/m^3	0.05		0.05
K_{ALKM2}	(Alkalinity Inhibition)	mole HCO_3^-/m^3	0.10		0.10
K_{PM2}	(Phosphorus Inhibition)	g P/m^3	0.01		0.01

This document is the property of CH2M HILL, Inc.
The expression of the information contained in thi
document is protected under U.S. copyright law.

Mass Balance for Average Flow Conditions

Constituent	Raw Wastewater (RW)	Main Recycle Influent (RecyI)	Main Recycled Stream (Recycle)	Main Combined Recycle Effluent (RecyE)	Main Bioreactor Influent (BI)	Main Secondary Clarifier Influent (SI)	Main Secondary Clarifier Effluent (SE)	Plant Effluent (PLE)	Main WAS	GBT WAS Thickener Influent (TWASI)	GBT Thickened WAS (TWAS)	AerDig1 Aerobic Digester Influent (ADI)	AerDig1 Aerobic Digester Effluent (ADE)	BFP Dewatering Influent (DWI)	BFP Dewatered Sludge (DWE)	Biosolids to Dispoal	GBT WAS Thickening Recycle (TWASR)	BFP Dewatering Recycle (DWR)	Recy Combined Discharge	Ender
Flow (m3/day)	837	837	76	913	913	1,332	836	836	78	78	29	29	29	29	2	2	48	28	76	
Carbonaceous BOD_5 (kg/day)	670	670	31	701	701	1,232	4	4	192	192	163	163	44	44	42	42	29	2	31	
COD (kg/day)	1,314	1,314	102	1,416	1,416	3,706	50	50	571	571	484	484	267	267	252	252	87	15	102	
TSS (kg/day)	754	754	121	875	875	4,434	13	13	691	691	587	587	355	355	337	337	104	18	121	
VSS (kg/day)	565	565	69	635	635	2,565	7	7	400	400	340	340	187	187	178	178	60	9	69	
TKN (kg-N/day)	126	126	8	133	133	197	3	3	30	30	26	26	18	18	15	15	5	3	8	
NH_3-N (kg-N/day)	75	75	2	77	77	0	0	0	0	0	0	0	2	2	0	0	0	2	2	
NO_3-N (kg-N/day)	0	0	9	9	9	17	11	11	1	1	0	0	8	8	0	0	1	8	9	
TP (kg-P/day)	21	21	28	49	49	264	10	10	40	40	33	33	33	33	11	11	6	22	28	
Alkalinity (kg/day as $CaCO_3$)	837	837	34	871	871	950	596	596	55	55	21	21	0	0	0	0	34	0	34	
H_2S (kg/day)	20	20	0	20	20	0	0	0	0	0	0	0	0	0	0	0	0	0	0	
BOD_5 (mg/L)	800	800	409	768	768	925	5	5	2,473	2,473	5,554	5,554	1,511	1,511	24,980	24,980	597	80	409	
COD (mg/L)	1,570	1,570	1,344	1,551	1,551	2,782	60	60	7,361	7,361	16,475	16,475	9,090	9,090	149,543	149,543	1,813	527	1,344	
TSS (mg/L)	900	900	1,599	958	958	3,328	15	15	8,903	8,903	20,000	20,000	12,098	12,098	200,000	200,000	2,148	642	1,599	
VSS (mg/L)	675	675	913	695	695	1,925	9	9	5,150	5,150	11,569	11,569	6,368	6,368	105,279	105,279	1,243	338	913	
TKN (mg-N/L)	150	150	101	146	146	148	4	4	391	391	875	875	613	613	8,892	8,892	97	108	101	
NH_3-N (mg-N/L)	90	90	28	85	85	0	0	0	0	0	0	0	77	77	77	77	0	77	28	
NO_3-N (mg-N/L)	0	0	113	9	9	13	13	13	13	13	13	13	288	288	288	288	13	288	113	
TP (mg-P/L)	25	25	374	54	54	198	12	12	512	512	1,136	1,136	1,136	1,136	6,706	6,706	132	796	374	
Alkalinity (mg/L as CaCO3)	999	999	453	954	954	713	713	713	713	713	713	713	0	0	0	0	713	0	453	
H_2S (mg/L)	24	24	0	22	22	0	0	0	0	0	0	0	0	0	0	0	0	0	0	

Mass Balance for Diurnal Peak Flow Conditions

Constituent	Raw Wastewater (RW)	Main Recycle Influent (RecyI)	Main Recycled Stream (Recycle)	Main Combined Recycle Effluent (RecyE)	Main Bioreactor Influent (BI)	Main Secondary Clarifier Influent (SI)	Main Secondary Clarifier Effluent (SE)		Main WAS	GBT WAS Thickener Influent (TWASI)	GBT Thickened WAS (TWAS)	AerDig1 Aerobic Digester Influent (ADI)	AerDig1 Aerobic Digester Effluent (ADE)	BFP Dewatering Influent (DWI)	BFP Dewatered Sludge (DWE)		GBT WAS Thickening Recycle (TWASR)	BFP Dewatering Recycle (DWR)	Recy Combined Discharge
Flow (m3/day)	1,197	1,197	263	1,461	1,461	2,298	1,338	1,338	122	122	48	48	48	48	12	12	74	189	263
Carbonaceous BOD_5 (kg/day)	871	871	60	931	931	1,469	5	5	186	186	252	252	72	72	287	287	45	15	60
COD (kg/day)	1,708	1,708	239	1,947	1,947	7,258	80	80	913	913	774	774	433	433	1,721	1,721	139	99	239
TSS (kg/day)	979	979	289	1,268	1,268	8,841	27	27	1,122	1,122	953	953	577	577	2,301	2,301	168	121	289
VSS (kg/day)	734	734	160	894	894	5,040	15	15	640	640	544	544	304	304	1,211	1,211	96	64	160
TKN (kg/day)	163	163	30	193	193	373	6	6	47	47	39	39	29	29	102	102	7	20	30
NH_3-N (kg-N/day)	98	98	15	112	112	3	2	2	0	0	0	0	4	4	1	1	0	15	15
NO_3-N (kg-N/day)	0	0	55	55	55	33	19	19	2	2	1	1	14	14	3	3	1	54	55
TP (kg-P/day)	27	27	167	194	194	732	116	116	78	78	62	62	54	54	77	77	17	150	167
Alkalinity (kg/day as $CaCO_3$)	1,088	1,088	38	1,126	1,126	1,171	682	682	62	62	24	24	0	0	0	0	38	0	38
H_2S (kg/day)	26	26	0	26	26	0	0	0	0	0	0	0	0	0	0	0	0	0	0
BOD_5 (mg/L)	727	727	227	637	637	639	4	4	1,526	1,526	5,288	5,288	1,511	1,511	24,980	24,980	598	80	227
COD (mg/L)	1,427	1,427	908	1,333	1,333	3,159	60	60	7,481	7,481	16,235	16,235	9,090	9,090	149,543	149,543	1,874	527	908
TSS (mg/L)	817	817	1,100	868	868	3,847	20	20	9,186	9,186	20,000	20,000	12,098	12,098	200,000	200,000	2,261	642	1,100
VSS (mg/L)	613	613	607	612	612	2,193	11	11	5,237	5,237	11,402	11,402	6,368	6,368	105,279	105,279	1,289	338	607
TKN (mg-N/L)	136	136	113	132	132	162	5	5	382	382	827	827	613	613	8,892	8,892	97	108	113
NH_3-N (mg-N/L)	82	82	56	77	77	1	1	1	1	1	1	1	77	77	77	77	1	77	56
NO_3-N (mg-N/L)	0	0	210	38	38	14	14	14	14	14	14	14	288	288	288	288	14	288	210
TP (mg-P/L)	0	23	634	133	133	318	86	86	642	642	1,298	1,298	1,136	1,136	6,706	6,706	222	796	634
Alkalinity (mg/L as CaCO3)	908	908	144	771	771	510	510	510	510	510	510	510	0	0	0	0	510	0	144
H_2S (mg/L)	22	22	0	18	18	0	0	0	0	0	0	0	0	0	0	0	0	0	0

This document is the property of CH2M HILL, Inc.
The expression of the information contained in this
document is protected under U.S. copyright law.

AerDig1

Aerobic Digester Module

Average Conditions

Constituent	Influent	Effluent
Flow (m3/day)	29	29
Carbonaceous BOD_5 (kg/day	163	44
Particulate	17	34
Heterotrophs	116	7
PAOs	31	3
PHA	0	0
Filtrate	0	0
COD (kg/day)	484	267
Particulate Bio	12	0
Particulate Non-Bio	165	165
Decay Prod Aer/Anx	15	64
Decay Prod Anaerobic	0	0
Heterotrophs	192	12
Autotrophs	13	4
PAOs	85	21
PHA	0	0
Soluble Bio	0	0
VFA	0	0
Colloidal Bio	0	0
Soluble Non-Bio	1	1
Colloidal Non-Bio	0	0
TSS (kg/day)	587	355
Biodegradable	9	0
Non-Biodegradable	256	256
Decay Prod Aer/Anx	12	50
Decay Prod Anaerobic	0	0
Metal Hydroxide	0	0
Metal Phosphate	0	0
Heterotrophs	150	10
Autotrophs	10	3
PAOs	67	16
PHA	0	0
Poly-P	83	20
VSS (kg/day)	340	187
Biodegradable	8	0
Non-Biodegradable	116	116
Decay Prod Aer/Anx	11	45
Decay Prod Anaerobic	0	0
Metal Hydroxide	0	0
Heterotrophs	135	9
Autotrophs	9	2
PAOs	60	15
PHA	0	0
TKN (kg-N/day)	26	18
NH_3-N (kg-N/day)	0	2
Particulate Bio Org N	0	0
Non-Bio Part Org N	7	10
Decay Prod Aer/Anx	1	4
Decay Prod Anaerobic	0	0
Heterotrophs	12	1
Autotrophs	1	0
PAOs	5	1
Non-Bio Soluble Org. N	0	0
Non-Bio Colloidal Org. N	0	0
Soluble Bio Org N	0	0
Colloidal Bio Org N	0	0
NO_3-N (kg-N/day)	0	8
TP (kg-P/day)	33	33
Bio Particulate	0	0
Non-Bio Particulate	1	2
Decay Prod Aer/Anx	0	1
Decay Prod Anaerobic	0	0
Metal Phosphate	0	0
Heterotrophs	4	0
Autotrophs	0	0
PAOs	2	0
Poly-P	26	6
Ortho-PO_4	0	23
Alkalinity (kg/day as CaCO3)	21	0
H_2S (kg/day)	0	0
BOD_5 (mg/L)	5,554	1,511
COD (mg/L)	16,475	9,090
TSS (mg/L)	20,000	12,098
VSS (mg/L)	11,569	6,368
TKN (mg-N/L)	875	613
NH_3-N (mg-N/L)	0	77
NO_3-N (mg-N/L)	13	288
TP (mg-P/L)	1,136	1,136
Alkalinity (mg/L as CaCO3)	713	0
H_2S (mg/L)	0	0

Constituent	Influent	Effluent
Flow (m3/day)	29	29
Carbonaceous BOD_5 (kg/day)	163	44
Particulate	17	34
Heterotrophs	116	7
PAOs	31	3
PHA	0	0
Filtrate	0	0
COD (kg/day)	484	267
Particulate Bio	12	0
Particulate Non-Bio	165	165
Decay Prod Aer/Anx	15	64
Decay Prod Anaerobic	0	0
Heterotrophs	192	12
Autotrophs	13	4
PAOs	85	21
PHA	0	0
Soluble Bio	0	0
VFA	0	0
Colloidal Bio	0	0
Soluble Non-Bio	1	1
Colloidal Non-Bio	0	0
TSS (kg/day)	587	355
Biodegradable	9	0
Non-Biodegradable	256	256
Decay Prod Aer/Anx	12	50
Decay Prod Anaerobic	0	0
Metal Hydroxide	0	0
Metal Phosphate	0	0
Heterotrophs	150	10
Autotrophs	10	3
PAOs	67	16
PHA	0	0
Poly-P	83	20
VSS (kg/day)	340	187
Biodegradable	8	0
Non-Biodegradable	116	116
Decay Prod Aer/Anx	11	45
Decay Prod Anaerobic	0	0
Metal Hydroxide	0	0
Heterotrophs	135	9
Autotrophs	9	2
PAOs	60	15
PHA	0	0
TKN (kg-N/day)	26	18
NH_3-N (kg-N/day)	0	2
Particulate Bio Org N	0	0
Non-Bio Part Org N	7	10
Decay Prod Aer/Anx	1	4
Decay Prod Anaerobic	0	0
Heterotrophs	12	1
Autotrophs	1	0
PAOs	5	1
Non-Bio Soluble Org. N	0	0
Non-Bio Colloidal Org. N	0	0
Soluble Bio Org N	0	0
Colloidal Bio Org N	0	0
NO_3-N (kg-N/day)	0	8
TP (kg-P/day)	33	33
Bio Particulate	0	0
Non-Bio Particulate	1	2
Decay Prod Aer/Anx	0	1
Decay Prod Anaerobic	0	0
Metal Phosphate	0	0
Heterotrophs	4	0
Autotrophs	0	0
PAOs	2	0
Poly-P	26	6
Ortho-PO_4	0	23
Alkalinity (kg/day as CaCO3)	21	0
H_2S (kg/day)	0	0

This document is the property of CH2M HILL, Inc.
The expression of the information contained in th
document is protected under U.S. copyright law.

Facility Operating Parameters		
Bioreactor Volume, m3		2,077.97
Minimum Valid SRT, days		3.00
SRT, Days		70.78
Temperature, oC		14
Volatile Solids Loading (kg VSS/m3-day)		0.16
Volatile Solids Reduction, %		44.95%
TSS Reduction %		39.51%
SOUR mg-O2/(g-VSS x hour) at 20 oC		0.68
SOUR mg-O2/(g-TSS x hour) at 20 oC		0.36
SOUR mg-O2/(g-VSS x hour) with nitrification at 20 oC		0.95
SOUR mg-O2/(g-TSS x hour) with nitrification at 20 oC		0.50
Total AOR (kgO2/day)		258
% denitrification		20%
Nutrients		
Nitrogen Released Due to Digestion (transformed to NH3) (kg/day)		12.43
Nitrogen Nitrified (Kg/day)		10.18
Nitrogen Denitrified (Kg/day)		2.11
Alkalinity in Feed (Kg/day)		21
Alkalinity Released Due to Digestion (Kg/day)		45
Alkalinity Lost Through Nitrification (Kg/day)		73
Alkalinity Produced Through Denitrification (Kg/day)		8
Alkalinity Discharged (Kg/day		0
Kinetic Limitation on Nitrification		
DO, mg/L		2
Maximum Specific Growth Rate (μ_{max}), Day^{-1} at Operational DO		0.3408
Ammonia in Digester Effluent Due to Kinetic Limitations		
	a	0.28
	b	-880.06
	c	12.25
Effluent Ammonia (mg-N/L) for Kinetic Limitation		0.01
Potential Nitrification Associated with Kinetics (Kg/day)		12.44

Aerobic Biological Kinetics	
Parameter	**Temperature**
Heterotrophs	
Maximum Specific Growth Rate (μ_{max}), Day^{-1}	2.60
Half Saturation for Organics (K_s), mg BOD_5/L	3.13
Half Saturation for Organics (K_s), mg Bio COD/L	5.00
True Yield (Y_H), mg COD/mg COD (aerobic)	0.67
Decay Rate (b_H), Day^{-1}	0.22
Inactive Fraction (f_b)	0.19
Volatile Fraction, % of TSS	0.90
COD/VSS Ratio, mg COD/mg VSS	1.42
Nitrogen Content, N/VSS (%)	0.09
Phosphorus Content, P/VSS (%	0.03
Autotrophs	
Maximum Specific Growth Rate (μ_{max}), Day^{-1}	0.43
Half Saturation for NH_3-N (K_N), mg-N/L	0.49
Half Saturation for O_2 (K_O), mg-O_2/L	0.50
True Yield (Y_A), mg TSS/mg NH_3-N	0.15
True Yield (Y_A), mg COD/mg NH_3-N	0.19
Decay Rate (b_A), Day^{-1}	0.04
Volatile Fraction, % of TSS	0.90
COD/VSS Ratio, mg COD/mg VSS	1.42
Nitrogen Content, N/VSS (%)	0.09
Phosphorus Content, P/VSS (%	0.03
PAOs	
True Yield (Y_H), mg TSS/mg BOD_5	0.76
True Yield (Y_H), mg COD/mg COD	0.62
Decay Rate (b_H), Day^{-1}	0.04
Inactive Fraction (f_b)	0.19
Volatile Fraction, % of TSS	0.90
COD/VSS Ratio, mg COD/mg VSS	1.42
Nitrogen Content, N/VSS (%)	0.09
Phosphorus Content, P/VSS (%)	0.03
TSS Content of Poly-F	3.23

This document is the property of CH2M HILL, Inc.
The expression of the information contained in th
document is protected under U.S. copyright law.

Diurnal Peak Flow Conditions

Constituent	Influent	Effluent	
Flow (m3/day)	48	48	
Carbonaceous BOD_5 (kg/day	252	72	
Particulate	94	56	
Heterotrophs	115	11	
PAOs	43	5	
PHA	0	0	
Filtrate	0	0	
COD (kg/day)	774	433	
Particulate Bio	15	0	
Particulate Non-Bio	291	268	
Decay Prod Aer/Anx	140	103	
Decay Prod Anaerobic	0	0	
Heterotrophs	191	20	
Autotrophs	15	6	
PAOs	120	34	
PHA	0	0	
Soluble Bio	0	0	
VFA	0	0	
Colloidal Bio	0	0	
Soluble Non-Bio	2	2	
Colloidal Non-Bio	0	0	
TSS (kg/day)	953	577	
Biodegradable	12	0	
Non-Biodegradable	428	416	
Decay Prod Aer/Anx	110	81	
Decay Prod Anaerobic	0	0	
Metal Hydroxide	0	0	
Metal Phosphate	0	0	
Heterotrophs	150	15	
Autotrophs	12	4	
PAOs	94	27	
PHA	0	0	
Poly-P	149	33	
VSS (kg/day)	544	304	
Biodegradable	11	0	
Non-Biodegradable	205	189	
Decay Prod Aer/Anx	99	73	
Decay Prod Anaerobic	0	0	
Metal Hydroxide	0	0	
Heterotrophs	135	14	
Autotrophs	10	4	
PAOs	84	24	
PHA	0	0	
TKN (kg-N/day)	39	29	
NH_3-N (kg-N/day)	0	4	
Particulate Bio Org N	1	0	
Non-Bio Part Org N	12	16	
Decay Prod Aer/Anx	6	6	
Decay Prod Anaerobic	12	0	
Heterotrophs	12	1	
Autotrophs	1	0	
PAOs	7	2	
Non-Bio Soluble Org. N	0	0	
Non-Bio Colloidal Org. N	0	0	
Soluble Bio Org N	0	0	
Colloidal Bio Org N	0	0	
NO_3-N (kg-N/day)	1	14	
TP (kg-P/day)	62	54	
Bio Particulate	0	0	
Non-Bio Particulate	2	4	
Decay Prod Aer/Anx	3	2	
Decay Prod Anaerobic	0	0	
Metal Phosphate	0	0	
Heterotrophs	4	0	
Autotrophs	0	0	
PAOs	2	1	
Poly-P	46	10	
Ortho-PO_4	4	37	
Alkalinity (kg/day as $CaCO_3$)	24	0	
H_2S (kg/day)	0	0	
BOD_5 (mg/L)	5,288	1,511	
COD (mg/L)	16,235	9,090	
TSS (mg/L)	20,000	12,098	
VSS (mg/L)	11,402	6,368	
TKN (mg-N/L)	827	613	
NH_3-N (mg-N/L)	1	77	
NO_3-N (mg-N/L)	14	288	
TP (mg-P/L)	1,298	1,136	
Alkalinity (mg/L as CaCO3)	510	0	
H_2S (mg/L)	0	0	

This document is the property of CH2M HILL, Inc.
The expression of the information contained in thi
document is protected under U.S. copyright law.

Model Results Summary for Alternative 4, Plant 4 Conventional WWTP

Projected 2028 Average Daily Flow = 201 m^3/day

Projected 2028 Maximum Month Flow = 281 m^3/day

Estimated Equipment Sizing:

- 3 process reactors at 238 m^3 each
- 2 circular clarifiers at 3.2 m diameter each
- 693 m^3 total aerobic digester volume

Use Instructions: See Comment in this cell.

Linked Model Input	Current Run:	Comments	Scenarios	Comments		Comments		Comments		Comments
Flow (m3/day)	281	MM	281	MM	281	MM	201	AD Flow	211	75% of MM
Diurnal Flow Peaking Factor	1.43	MxD:MM	1.43	MxD:MM	1.43	MxD:MM	2	MxD:AD	1.43	MxD:MM
CBOD5 (kg/day)	225	MM loading	225	MM loading	225	MM loading	161	AD Loading	168	75% of MM
TSS (kg/day)	253	MM loading	253	MM loading	253	MM loading	181	AD Loading	189	75% of MM
% VS	75%		75%		75%		75%		75%	
TKN (kg/day)	42	MM loading	42	MM loading	42	MM loading	30	AD Loading	32	75% of MM
Ammonia -N (kg/day)	25	MM loading	25	MM loading	25	MM loading	18	AD Loading	19	75% of MM
Total Phosphate - P (kg/day)	7	MM loading	7	MM loading	7	MM loading	5	AD Loading	5	75% of MM
Alkalinity (kg/day)	281	Assumed at 1000 mg/L	281	Assumed at 1000 mg/L	281	Assumed at 1000 mg/L	200	Assumed at 1000 mg/L	211	Assumed at 1000 mg/L
Hydrogen Sulfide (kg/day)	7	Assumed at 24 mg/L	7	Assumed at 24 mg/L	7	Assumed at 24 mg/L	5	Assumed at 24 mg/L	5	Assumed at 24 mg/L
Number of Aeration Basin Trains Online	3		3		3		3		3	
Volume per Train (m3)	238		238		238		238		238	
Total Aeration Basin Volume in Service (m3)	715		715		715		715		715	
SRT	10		10		10		10		10	
System pH	7.2		7.2		7.2		7.2		7.2	
Temperature °C	14	Minimum Month	14	Minimum Month	24.6	Maximum Month	16.8	Annual average	14	Minimum Month
Nitrified Recycle Rate (% of Aer Basin Influent flow)	610%		610%		615%		585%		595%	
Number of Secondary Clarifiers Online	2		2		2		2		1	
Surface Area per Secondary Clarifier (sq m)	7.80		7.80		7.80		7.80		7.80	
Total Secondary Clarifier Area (sq m)	15.61		15.61		15.61		15.61		7.80	
Secondary Clarifier Diameter (m)	3.15		3.15		3.15		3.15		3.15	
SVI (mL/g)	150		150		150		150		150	
Average Secondary Effluent TSS (mg/L)	15	Fixed	15	Fixed	15	Fixed	15	Fixed	15	Fixed
Peak Secondary Effluent TSS (mg/L)	20	Fixed	20	Fixed	20	Fixed	20	Fixed	20	Fixed
Average RAS Underflow Rate (% of Inf Q)	45.8%	Calculated	45.8%	Calculated	45.6%	Calculated	44.0%	Calculated	44.3%	Calculated
Peak RAS Underflow Rate (% of Inf Q)	57.3%	Calculated	57.3%	Calculated	56.4%	Calculated	42.7%	Calculated	55.8%	Calculated
Thickener Solids Capture (%)	85%		85%		85%		85%		85%	
Thickened Sludge Concentration (mg/L)	20,000		20,000		20,000		20,000		20,000	
AerDig1 Volume (m3)	693		693		693		693		693	
AerDig1 Temperature (°C)	14	Minimum Month	14	Minimum Month	24.6	Maximum Month	16.8	Annual average	14	Minimum Month
AerDig1 DO (mg/L)	2		2		2		2		2	
AerDig1 % Denitrification	20%		20%		20%		20%		20%	
Dewatering Solids Capture (%)	95%		95%		95%		95%		95%	
Dewatered Sludge Concentration (%)	20%		20%		20%		20%		20%	
Results										
SRT	10.0		10.0		10.0		10.0		10.0	
Final Anoxic Zone NO3	0.13	want < 0.5	0.13	want < 0.5	0.06	want < 0.5	0.08	want < 0.5	0.11	want < 0.5
Secondary Effluent TSS (mg/L)	15.0	want < 60 (goal = 42)	15.0	want < 60 (goal = 42)	15.0	want < 60 (goal = 42)	15.0	want < 60 (goal = 42)	15.0	want < 60 (goal = 42)
Secondary Effluent CBOD5 (mg/L)	4.71	want < 60 (goal = 42)	4.71	want < 60 (goal = 42)	4.02	want < 60 (goal = 42)	4.44	want < 60 (goal = 42)	4.61	want < 60 (goal = 42)
Secondary Effluent COD (mg/L)	60.3	want < 150, (goal = 105.0)	60.3	want < 150, (goal = 105.0)	59.4	want < 150, (goal = 105.0)	60.0	want < 150, (goal = 105.0)	60.1	want < 150, (goal = 105.0)
Secondary Effluent TN (mg/L)	16.3	want < 70, (goal = 49.0)	16.3	want < 70, (goal = 49.0)	16.1	want < 70, (goal = 49.0)	16.1	want < 70, (goal = 49.0)	16.2	want < 70, (goal = 49.0)
Secondary Effluent NH3-N (mg/L)	0.15		0.15		0.08		0.09		0.15	
Secondary Effluent NO3-N (mg/L)	12.64	want < 18 (goal is 12.6)	12.6	want < 18 (goal is 12.6)	12.58	want < 18 (goal is 12.6)	12.53	want < 18 (goal is 12.6)	12.54	want < 18 (goal is 12.6)
Secondary Effluent TP (mg/L)	10.91	want < 15 (goal = 10.5)	10.89	want < 15 (goal = 10.5)	7.35	want < 15 (goal = 10.5)	11.80	want < 15 (goal = 10.5)	11.79	want < 15 (goal = 10.5)
Influent COD (mg/L)	1,572	~1320 mg/L per ops data	1,572	~1320 mg/L per ops data	1,572	~1320 mg/L per ops data	1,575	~1320 mg/L per ops data	1,573	~1320 mg/L per ops data
Corresponding Average MLSS (mg/L)	3,298	want < 3400 at MM	3,298	want < 3400 at MM	3,356	want < 3400 at MM	2,404	want < 3400 at MM	2,502	want < 3400 at MM
Secondary Influent MLSS (mg/L)	3,279		3,279		3,339		2,386		2,484	
Nitrified Recycle Rate (m3/day)	1,871		1,871		1,886		1,333		1,414	
Solids Loading Rate To Secondary Clarifiers (kg/day-sq m)	93.96		93.96		95.66		50.19		109.21	
RAS Rate (m3/day)	140.42		140.42		140.42		100.30		105.31	
Corresponding WAS (kg/day)	232		232		236		169		176	
Combined Thickened Feed Sludge to Aerobic Dig. (kg/day)	197		197		201		144		149	
Digester Volatile Solids Loading Rate (kg/day-m3)	0		0		0		0		0	
SRT	70.32		70.32		69.09		96.46		92.67	
Model Prediction of VS Destruction (combined)	44.91%		44.91%		42.94%		46.14%		46.32%	
Digester Alkalinity Limited?	yes		yes		yes		yes		yes	
SOUR in Digester (mg O2/hour/gram TS)	0.36	want < 1.5 at 20 C, goal = 1.13	0.36	want < 1.5 at 20 C, goal = 1.13	0.32	want < 1.5 at 20 C, goal = 1.13	0.27	want < 1.5 at 20 C, goal = 1.13	0.29	want < 1.5 at 20 C, goal = 1.13
Dewatered Solids From Plant (kg/day)	113		113		114		79		83	
PBNR AOR (kg/day)	343		343		356		247		257	
PBNR SOR (kg/day)	997		997		1,187		679		689	
PBNR Total Required Air Rate in Zones 3-5 (N*m3/hr)	479		479		583		351		348	

This document is the property of CH2M HILL, Inc.
The expression of the information contained in this
document is protected under U.S. copyright law.

Stoichiometric Parameters		Value	Default	Units
Hydrolysis of Particulate Substrate: X_S				
Production of Soluble Inert COD: S_I	f_{SI}	0.00		g COD/g COD
Heterotrophic Organisms: X_H				
Yield	Y_H	0.6660		g COD/g COD
Fraction of Lysis Inerts	f_{XI}	0.08		g COD/g COD
Phosphorus Accumulating Organisms: X_{PAO}				
Yield (biomass/PHA)	Y_{PAO}	0.6250		g COD/g COD
Phosphate release per PHA Storer	Y_{PO4}	0.40		g P/g COD
PHA requirement for PP storage	Y_{PHA}	0.20		g COD/g P
Fraction of Lysis Inerts	f_{XI}	0.08		g COD/g COD
Autotrophic Organisms: X_{AUT}				
Yield per NO_3-N	Y_A	0.19		g COD/g N
Fraction of Lysis Inerts	f_{XI}	0.08		g COD/g COD
Methanol Degraders-Population 1: X_{M1}				
Yield per MeOH COD	Y_{M1}	0.58		g COD/g COD
Fraction of Lysis Inerts	f_{XI}	0.10		g COD/g COD
Methanol Degraders-Population 2: X_{M2}				
Yield per MeOH COD	Y_{M2}	0.36		g COD/g COD
Fraction of Lysis Inerts	f_{XI}	0.10		g COD/g COD

Conversion Factors for Conservation Equatior		Value	Default	Units
Nitrogen Content of:	Check Delta	0.00		
Soluble Inert COD: S_I	i_{NSI}	0.0600	0.01	g N/g COD
Fermentable Substrate: S_F	i_{NSF}	0.0391	0.03	g N/g COD
Inert Particulate COD: X_I	i_{NXI}	0.0400	0.02	g N/g COD
Slowly Biodegradable Substrate: X_S	i_{NXS}	0.0391	0.04	g N/g COD
Biomass: X_H, X_{PAO}, X_{AUT}, X_{m1}, X_{m2}	i_{NBM}	0.0606	0.07	g N/g COD
Decay Products:, $X_{p,aa}$	i_{NXdaa}	0.0606	0.02	g N/g COD
Phosphorus Content of:	Check Delta	0.00		
Soluble Inert COD: S_I	i_{PSI}	0.0000	0.00	g P/g COD
Fermentable Substrate: S_F	i_{PSF}	0.0000	0.01	g P/g COD
Inert Particulate COD: X_I	i_{PXI}	0.0073	0.01	g P/g COD
Slowly Biodegradable Substrate: X_S	i_{PXS}	0.0053	0.01	g P/g COD
Biomass: X_H, X_{PAO}, X_{AUT}	i_{PBM}	0.0200	0.02	g P/g COD
Decay Products:, $X_{d,aa}$	i_{PXdaa}	0.0200	1.02	g P/g COD
TSS to COD Ratio for:				
Inert Particulate COD: X_I	i_{TSSXI}	0.7825	0.75	g TSS/g COD
Slowly Biodegradable Substrate: X_S	i_{TSSXS}	0.7825	0.75	g TSS/g COD
Biomass: X_H, X_{PAO}, X_{AUT}, X_{m1}, X_{m2}	i_{TSSBM}	0.7825	0.90	g TSS/g COD
Decay Products: $X_{d,aa}$	$i_{TSSXdaa}$	0.7825	0.75	g TSS/g COD

Nitrogen Ratio Adjustment			Ratio
Fermentable Substrate: S_F	i_{NSF}	0.0391	
Slowly Biodegradable Substrate: X_S	i_{NXS}	0.0391	1.00
Alternate Nitrogen Ratic			
Fermentable Substrate: S_F	i_{NSF}	0.0532	
Slowly Biodegradable Substrate: X_S	i_{NXS}	0.0355	1.50

Kinetic Parameters		Unit	Typical Values 20 °C	10 °C	Temperature 14.0 deg. C
Hydrolysis of Particulate Substrate: X_S					
k_h	(Hydrolysis Rate)	1/day	3.00	2.00	2.35
n_{NO3}	(Anoxic Reduction Factor)		0.60	0.60	0.60
n_{fe}	*(Anaerobic Reduction Factor)*		0.40	0.40	0.40
K_{O2}	(Oxygen Inhibition)	g O_2/m^3	0.20	0.20	0.20
K_{NO3}	(Nitrate Inhibition)	g N/m^3	0.50	0.50	0.50
K_X	(Particulate Inhibition)	g COD/g COD	0.10	0.10	0.10
Hydrolysis of Decay Products: X_{daa}					
K_{hdaa}	(Hydrolysis Rate)	1/d	1.20		0.94
K_{O2Ydaa}	(Oxygen Inhibition)	g O_2/m^3	0.10		0.10
$K_{NO3Ydaa}$	(Nitrate Inhibition)	g N/m^3	0.10		0.10
K_{Xdaa}	*(Particulate Inhibition)*	g X_{daa}/g X_H	0.10		0.10
Heterotrophic Organisms: X_H					
μ_H	(Max Growth Rate)	1/day	6.00	3.00	2.60
q_{fe}	(Max Fermentation Rate)	g COD/(g COD*d)	3.00	1.50	1.98
n_{NO3}	(Anoxic Reduction Factor)		0.80	0.80	0.80
b_H	(Decay Rate)	1/day	0.40	0.20	0.50
K_{O2}	(Oxygen Inhibition)	g O_2/m^3	0.20	0.20	0.20
K_F	(Growth on S_F)	g COD/m^3	4.00	4.00	2.00
K_{fe}	(Fermentation of S_F)	g COD/m^3	4.00	4.00	4.00
K_A	(Growth on S_A)	g COD/m^3	4.00	4.00	2.00
K_{NO3}	(Anoxic Growth)	g N/m^3	0.50	0.50	0.50
K_{NH4}	(Nitrogen Inhibition)	g N/m^3	0.05	0.05	0.05
K_P	(Phosphorus Inhibition)	g P/m^3	0.01	0.01	0.01
K_{ALK}	(Alkalininty Inhibition)	mole HCO_3^-/m^3	0.10	0.10	0.10
Phosphorus Accumulating Organisms: X_{PAO}					
q_{PHA}	*(X_{PHA} Storage Rate)*	g X_{PHA}/(g X_{PAO}*d)	3.00	2.00	6.00
q_{PP}	(X_{PP} Storage Rate)	g X_{PP}/(g X_{PAO}*d)	1.50	1.00	1.18
μ_{PAO}	(Max Growth Rate)	1/day	1.00	0.67	0.79
n_{NO3}	(Anoxic Reduction Factor)		0.60	0.60	0.60
b_{PAO}	(X_{PAO} Decay Rate)	1/day	0.20	0.10	0.10
b_{PP}	*(X_{PP} Decay Rate)*	1/day	0.20	0.10	0.10
b_{PHA}	(X_{PHA} Decay Rate)	1/day	0.20	0.10	0.10
K_{O2}	(Oxygen Inhibition)	g O_2/m^3	0.20	0.20	0.20
K_{NO3}	(Anoxic Growth)	g N/m^3	0.50	0.50	0.50
K_A	(Growth on S_A)	g COD/m^3	4.00	4.00	2.00
K_{NH4}	(Nitrogen Inhibition)	g N/m^3	0.05	0.05	0.0050
K_{PS}	(Phosphorus Inhibition of PP)	g P/m^3	0.20	0.20	0.20
K_P	*(Phosphorus Inhibition of Growth)*	g P/m^3	0.01	0.01	0.0050
K_{ALK}	(Alkalininty Inhibition)	mole HCO_3^-/m^3	0.10	0.10	0.10
K_{PP}	(Polyphosphate Inhibition)	g X_{PP}/g X_{PAO}	0.01	0.01	0.02
K_{MAX}	(Max Ratio of X_{PP}/X_{PAO})	g X_{PP}/g X_{PAO}	0.34	0.34	0.34
K_{IPP}	(Inhibition of PP Storage)	g X_{PP}/g X_{PAO}	0.02	0.02	0.02
K_{PHA}	*(Saturation for PHA)*	g X_{PHA}/g X_{PAO}	0.01	0.01	0.01
Autotrophic Organisms: X_{AUT}					
μ_{AUT}	(Maximum Growth Rate)	1/day	1.00	0.35	0.42
b_{AUT}	(Decay Rate)	1/day	0.15	0.05	0.04
K_{O2}	(Oxygen Inhibition)	g O_2/m_3	0.50	0.50	0.50
K_{NH4}	*(Nitrogen Inhibition: SUBSTRATE)*	g N/m^3	1.00	1.00	0.49
K_{ALK}	(Alkalininty Inhibition)	mole HCO_3^-/m^3	0.50	0.50	0.01
K_P	(Phosphorus Inhibition of Growth)	g P/m^3	0.01	0.01	0.0050
Precipitation					
k_{PRE}	(Rate of Phosphorus Precipitation)	m^3/(g $Me(OH)_3$*d)	1.00	1.00	2.00
k_{RED}	*(Rate of Phosphous Redissolution)*	1/day	0.60	0.60	0.10
K_{ALK}	(Alkalininty Inhibition)	mole HCO_3^-/m^3	0.50	0.50	0.50
Methanol Degrading Organisms - Population 1					
μ_{M1}	(Maximum Growth Rate)	1/day	3.88		7.00
n_{NO3M1}	(Anoxic Reduction Factor)		0.21		0.20
b_{M1}	(Decay Rate)	1/day	0.18		0.20
K_{O2M1}	(Oxygen Inhibition)	g O_2/m^3	0.20		0.50
K_{M1}	(Growth on Methanol)	g COD/m^3	4.00		4.00
K_{NO3M1}	(Anoxic Growth)	g N/m^3	0.50	0.50	0.80
K_{NH4M1}	(Nitrogen Inhibition)	g N/m^3	0.05		0.05
K_{ALKM1}	*(Alkalinity Inhibition)*	*mole HCO_3^-/m^3*	0.10		0.10
K_{PM1}	(Phosphorus Inhibition)	g P/m^3	0.01		0.01
Methanol Degrading Organisms - Population 2					
μ_{M2}	(Maximum Growth Rate)	1/day	1.72		7.00
n_{NO3M2}	(Anoxic Reduction Factor)		0.76		0.80
b_{M2}	*(Decay Rate)*	1/day	0.25		0.25
K_{O2M2}	(Oxygen Inhibition)	g O_2/m^3	0.20		0.50
K_{M2}	(Growth on Methanol)	g COD/m^3	4.00		1.00
K_{NO3M2}	*(Anoxic Growth)*	g N/m^3	0.50	0.50	0.50
K_{NH4M2}	(Nitrogen Inhibition)	g N/m^3	0.05		0.05
K_{ALKM2}	(Alkalinity Inhibition)	mole HCO_3^-/m^3	0.10		0.10
K_{PM2}	*(Phosphorus Inhibition)*	g P/m^3	0.01		0.01

This document is the property of CH2M HILL, Inc.
The expression of the information contained in thi
document is protected under U.S. copyright law.

Mass Balance for Average Flow Conditions

Constituent	Raw Wastewater (RW)	Main Recycle Influent (RecyI)	Main Recycled Stream (Recycle)	Main Combined Recycle Effluent (RecyE)	Main Bioreactor Influent (BI)	Main Secondary Clarifier Influent (SI)	Main Secondary Clarifier Effluent (SE)	Plant Effluent (PLE)	Main WAS	GBT WAS Thickener Influent (TWASI)	GBT Thickened WAS (TWAS)	AerDig1 Aerobic Digester Influent (ADI)	AerDig1 Aerobic Digester Effluent (ADE)	BFP Dewatering Influent (DWI)	BFP Dewatered Sludge (DWE)	Biosolids to Dispoal	GBT WAS Thickening Recycle (TWASR)	BFP Dewatering Recycle (DWR)	Recy Combined Discharge	Ender
Flow (m3/day)	281	281	26	307	307	447	280	280	26	26	10	10	10	10	1	1	17	9	26	
Carbonaceous BOD_5 (kg/day)	225	225	10	236	236	409	1	1	65	65	55	55	15	15	14	14	10	1	10	
COD (kg/day)	441	441	34	476	476	1,228	17	17	192	192	163	163	90	90	85	85	29	5	34	
TSS (kg/day)	253	253	41	294	294	1,466	4	4	232	232	197	197	119	119	113	113	35	6	41	
VSS (kg/day)	190	190	23	213	213	850	2	2	134	134	114	114	63	63	60	60	20	3	23	
TKN (kg-N/day)	42	42	3	45	45	65	1	1	10	10	9	9	6	6	5	5	2	1	3	
NH_3-N (kg-N/day)	25	25	1	26	26	0	0	0	0	0	0	0	1	1	0	0	0	1	1	
NO_3-N (kg-N/day)	0	0	3	3	3	6	4	4	0	0	0	0	3	3	0	0	0	3	3	
TP (kg-P/day)	7	7	9	16	16	87	3	3	13	13	11	11	11	11	4	4	2	7	9	
Alkalinity (kg/day as $CaCO_3$)	281	281	12	293	293	318	199	199	19	19	7	7	0	0	0	0	12	0	12	
H_2S (kg/day)	7	7	0	7	7	0	0	0	0	0	0	0	0	0	0	0	0	0	0	
BOD_5 (mg/L)	802	802	404	768	768	914	5	5	2,441	2,441	5,572	5,572	1,522	1,522	25,122	25,122	584	81	404	
COD (mg/L)	1,572	1,572	1,325	1,551	1,551	2,745	60	60	7,256	7,256	16,501	16,501	9,112	9,112	149,703	149,703	1,771	528	1,325	
TSS (mg/L)	902	902	1,574	959	959	3,279	15	15	8,762	8,762	20,000	20,000	12,114	12,114	200,000	200,000	2,094	643	1,574	
VSS (mg/L)	677	677	899	696	696	1,900	9	9	5,076	5,076	11,586	11,586	6,383	6,383	105,391	105,391	1,213	339	899	
TKN (mg-N/L)	150	150	99	146	146	146	4	4	385	385	875	875	613	613	8,878	8,878	94	108	99	
NH_3-N (mg-N/L)	90	90	28	85	85	0	0	0	0	0	0	0	77	77	77	77	0	77	28	
NO_3-N (mg-N/L)	0	0	111	9	9	13	13	13	13	13	13	13	287	287	287	287	13	287	111	
TP (mg-P/L)	24	24	365	53	53	194	11	11	500	500	1,129	1,129	1,129	1,129	6,692	6,692	127	790	365	
Alkalinity (mg/L as CaCO3)	999	999	456	954	954	712	712	712	712	712	712	712	0	0	0	0	712	0	456	
H_2S (mg/L)	24	24	0	22	22	0	0	0	0	0	0	0	0	0	0	0	0	0	0	

Mass Balance for Diurnal Peak Flow Conditions

Constituent	Raw Wastewater (RW)	Main Recycle Influent (RecyI)	Main Recycled Stream (Recycle)	Main Combined Recycle Effluent (RecyE)	Main Bioreactor Influent (BI)	Main Secondary Clarifier Influent (SI)	Main Secondary Clarifier Effluent (SE)		Main WAS	GBT WAS Thickener Influent (TWASI)	GBT Thickened WAS (TWAS)	AerDig1 Aerobic Digester Influent (ADI)	AerDig1 Aerobic Digester Effluent (ADE)	BFP Dewatering Influent (DWI)	BFP Dewatered Sludge (DWE)		GBT WAS Thickening Recycle (TWASR)	BFP Dewatering Recycle (DWR)	Recy Combined Discharge	
Flow (m3/day)	402	402	89	490	490	771	449	449	42	42	16	16	16	16	4	4	26	63	89	
Carbonaceous BOD_5 (kg/day)	292	292	20	313	313	488	2	2	63	63	85	85	24	24	97	97	15	5	20	
COD (kg/day)	574	574	80	654	654	2,409	27	27	307	307	260	260	146	146	578	578	47	33	80	
TSS (kg/day)	328	328	97	425	425	2,929	9	9	376	376	320	320	194	194	772	772	56	41	97	
VSS (kg/day)	246	246	54	300	300	1,672	5	5	215	215	182	182	102	102	407	407	32	21	54	
TKN (kg/day)	55	55	10	65	65	124	2	2	16	16	13	13	10	10	34	34	2	7	10	
NH_3-N (kg-N/day)	33	33	5	38	38	1	1	1	0	0	0	0	1	1	0	0	0	5	5	
NO_3-N (kg-N/day)	0	0	19	19	19	11	6	6	1	1	0	0	5	5	1	1	0	18	19	
TP (kg-P/day)	9	9	55	64	64	241	38	38	26	26	21	21	18	18	26	26	6	50	56	
Alkalinity (kg/day as $CaCO_3$)	365	365	13	378	378	393	229	229	21	21	8	8	0	0	0	0	13	0	13	
H_2S (kg/day)	9	9	0	9	9	0	0	0	0	0	0	0	0	0	0	0	0	0	0	
BOD_5 (mg/L)	728	728	226	637	637	632	4	4	1,507	1,507	5,303	5,303	1,522	1,522	25,122	25,122	586	81	226	
COD (mg/L)	1,428	1,428	904	1,333	1,333	3,123	60	60	7,386	7,388	16,261	16,261	9,112	9,112	149,703	149,703	1,835	528	904	
TSS (mg/L)	818	818	1,093	868	868	3,797	20	20	9,057	9,057	20,000	20,000	12,114	12,114	200,000	200,000	2,209	643	1,093	
VSS (mg/L)	613	613	604	612	612	2,168	11	11	5,172	5,172	11,421	11,421	6,383	6,383	105,391	105,391	1,261	339	604	
TKN (mg-N/L)	137	137	113	132	132	160	5	5	377	377	827	827	613	613	8,878	8,878	95	108	113	
NH_3-N (mg-N/L)	82	82	55	77	77	1	1	1	1	1	1	1	77	77	77	77	1	77	55	
NO_3-N (mg-N/L)	0	0	209	38	38	14	14	14	14	14	14	14	287	287	287	287	14	287	209	
TP (mg-P/L)	0	22	625	131	131	313	85	85	630	630	1,289	1,289	1,129	1,129	6,692	6,692	217	790	625	
Alkalinity (mg/L as CaCO3)	908	908	147	771	771	510	510	510	510	510	510	510	0	0	0	0	510	0	147	
H_2S (mg/L)	22	22	0	18	18	0	0	0	0	0	0	0	0	0	0	0	0	0	0	

This document is the property of CH2M HILL, Inc.
The expression of the information contained in this
document is protected under U.S. copyright law.

AerDig1

Aerobic Digester Module

Average Conditions

Constituent	Influent	Effluent
Flow (m3/day)	10	10
Carbonaceous BOD_5 (kg/day	55	15
Particulate	6	12
Heterotrophs	39	2
PAOs	10	1
PHA	0	0
Filtrate	0	0
COD (kg/day)	163	90
Particulate Bio	4	0
Particulate Non-Bio	55	55
Decay Prod Aer/Anx	5	22
Decay Prod Anaerobic	0	0
Heterotrophs	65	4
Autotrophs	4	1
PAOs	28	7
PHA	0	0
Soluble Bio	0	0
VFA	0	0
Colloidal Bio	0	0
Soluble Non-Bio	0	0
Colloidal Non-Bio	0	0
TSS (kg/day)	197	119
Biodegradable	3	0
Non-Biodegradable	86	86
Decay Prod Aer/Anx	4	17
Decay Prod Anaerobic	0	0
Metal Hydroxide	0	0
Metal Phosphate	0	0
Heterotrophs	51	3
Autotrophs	3	1
PAOs	22	6
PHA	0	0
Poly-P	28	7
VSS (kg/day)	114	63
Biodegradable	3	0
Non-Biodegradable	39	39
Decay Prod Aer/Anx	4	15
Decay Prod Anaerobic	0	0
Metal Hydroxide	0	0
Heterotrophs	46	3
Autotrophs	3	1
PAOs	20	5
PHA	0	0
TKN (kg-N/day)	9	6
NH_3-N (kg-N/day)	0	1
Particulate Bio Org N	0	0
Non-Bio Part Org N	2	3
Decay Prod Aer/Anx	0	1
Decay Prod Anaerobic	0	0
Heterotrophs	4	0
Autotrophs	0	0
PAOs	2	0
Non-Bio Soluble Org. N	0	0
Non-Bio Colloidal Org. N	0	0
Soluble Bio Org N	0	0
Colloidal Bio Org N	0	0
NO_3-N (kg-N/day)	0	3
TP (kg-P/day)	11	11
Bio Particulate	0	0
Non-Bio Particulate	0	1
Decay Prod Aer/Anx	0	0
Decay Prod Anaerobic	0	0
Metal Phosphate	0	0
Heterotrophs	1	0
Autotrophs	0	0
PAOs	1	0
Poly-P	9	2
Ortho-PO_4	0	8
Alkalinity (kg/day as $CaCO_3$)	7	0
H_2S (kg/day)	0	0
BOD_5 (mg/L)	5,572	1,522
COD (mg/L)	16,501	9,112
TSS (mg/L)	20,000	12,114
VSS (mg/L)	11,586	6,383
TKN (mg-N/L)	875	613
NH_3-N (mg-N/L)	0	77
NO_3-N (mg-N/L)	13	287
TP (mg-P/L)	1,129	1,129
Alkalinity (mg/L as CaCO3)	712	0
H_2S (mg/L)	0	0

Constituent	Influent	Effluent
Flow (m3/day)	10	10
Carbonaceous BOD_5 (kg/day)	55	15
Particulate	6	12
Heterotrophs	39	2
PAOs	10	1
PHA	0	0
Filtrate	0	0
COD (kg/day)	163	90
Particulate Bio	4	0
Particulate Non-Bio	55	55
Decay Prod Aer/Anx	5	22
Decay Prod Anaerobic	0	0
Heterotrophs	65	4
Autotrophs	4	1
PAOs	28	7
PHA	0	0
Soluble Bio	0	0
VFA	0	0
Colloidal Bio	0	0
Soluble Non-Bio	0	0
Colloidal Non-Bio	0	0
TSS (kg/day)	197	119
Biodegradable	3	0
Non-Biodegradable	86	86
Decay Prod Aer/Anx	4	17
Decay Prod Anaerobic	0	0
Metal Hydroxide	0	0
Metal Phosphate	0	0
Heterotrophs	51	3
Autotrophs	3	1
PAOs	22	6
PHA	0	0
Poly-P	28	7
VSS (kg/day)	114	63
Biodegradable	3	0
Non-Biodegradable	39	39
Decay Prod Aer/Anx	4	15
Decay Prod Anaerobic	0	0
Metal Hydroxide	0	0
Heterotrophs	46	3
Autotrophs	3	1
PAOs	20	5
PHA	0	0
TKN (kg-N/day)	9	6
NH_3-N (kg-N/day)	0	1
Particulate Bio Org N	0	0
Non-Bio Part Org N	2	3
Decay Prod Aer/Anx	0	1
Decay Prod Anaerobic	0	0
Heterotrophs	4	0
Autotrophs	0	0
PAOs	2	0
Non-Bio Soluble Org. N	0	0
Non-Bio Colloidal Org. N	0	0
Soluble Bio Org N	0	0
Colloidal Bio Org N	0	0
NO_3-N (kg-N/day)	0	3
TP (kg-P/day)	11	11
Bio Particulate	0	0
Non-Bio Particulate	0	1
Decay Prod Aer/Anx	0	0
Decay Prod Anaerobic	0	0
Metal Phosphate	0	0
Heterotrophs	1	0
Autotrophs	0	0
PAOs	1	0
Poly-P	9	2
Ortho-PO_4	0	8
Alkalinity (kg/day as $CaCO_3$)	7	0
H_2S (kg/day)	0	0

This document is the property of CH2M HILL, Inc.
The expression of the information contained in th
document is protected under U.S. copyright law.

Facility Operating Parameters		
Bioreactor Volume, m3		692.66
Minimum Valid SRT, days		3.00
SRT, Days		70.32
Temperature, oC		14
Volatile Solids Loading (kg VSS/m3-day)		0.16
Volatile Solids Reduction, %		44.91%
TSS Reduction %		39.43%
SOUR mg-O2/(g-VSS x hour) at 20 oC		0.68
SOUR mg-O2/(g-TSS x hour) at 20 oC		0.36
SOUR mg-O2/(g-VSS x hour) with nitrification at 20 oC		0.95
SOUR mg-O2/(g-TSS x hour) with nitrification at 20 oC		0.50
Total AOR (kgO2/day)		86
% denitrification		20%
Nutrients		
Nitrogen Released Due to Digestion (transformed to NH3) (kg/day)		4.17
Nitrogen Nitrified (Kg/day)		3.41
Nitrogen Denitrified (Kg/day)		0.71
Alkalinity in Feed (Kg/day)		7
Alkalinity Released Due to Digestion (Kg/day)		15
Alkalinity Lost Through Nitrification (Kg/day)		25
Alkalinity Produced Through Denitrification (Kg/day)		3
Alkalinity Discharged (Kg/day		0
Kinetic Limitation on Nitrification		
DO, mg/L		2
Maximum Specific Growth Rate (μ_{Hmax}), Day^{-1} at Operational DO		0.3408
Ammonia in Digester Effluent Due to Kinetic Limitations		
	a	0.28
	b	-881.71
	c	12.28
Effluent Ammonia (mg-N/L) for Kinetic Limitation		0.01
Potential Nitrification Associated with Kinetics (Kg/da)		4.17

Aerobic Biological Kinetics	
Parameter	**Temperature**
Heterotrophs	
Maximum Specific Growth Rate (μ_{Hmax}), Day^{-1}	2.60
Half Saturation for Organics (K_S), mg BOD_5/L	3.13
Half Saturation for Organics (K_S), mg Bio COD/L	5.00
True Yield (Y_H), mg COD/mg COD (aerobic)	0.67
Decay Rate (b_H), Day^{-1}	0.22
Inactive Fraction (f_D)	0.19
Volatile Fraction, % of TSS	0.90
COD/VSS Ratio, mg COD/mg VSS	1.42
Nitrogen Content, N/VSS (%)	0.09
Phosphorus Content, P/VSS (%	0.03
Autotrophs	
Maximum Specific Growth Rate (μ_{Hmax}), Day^{-1}	0.43
Half Saturation for NH_3-N (K_N), mg-N/L	0.49
Half Saturation for O_2 (K_O), mg-O_2/L	0.50
True Yield (Y_A), mg TSS/mg NH_3-N	0.15
True Yield (Y_A), mg COD/mg NH_3-N	0.19
Decay Rate (b_A), Day^{-1}	0.04
Volatile Fraction, % of TSS	0.90
COD/VSS Ratio, mg COD/mg VSS	1.42
Nitrogen Content, N/VSS (%)	0.09
Phosphorus Content, P/VSS (%	0.03
PAOs	
True Yield (Y_H), mg TSS/mg BOD_5	0.76
True Yield (Y_H), mg COD/mg COD	0.62
Decay Rate (b_H), Day^{-1}	0.04
Inactive Fraction (f_D)	0.19
Volatile Fraction, % of TSS	0.90
COD/VSS Ratio, mg COD/mg VSS	1.42
Nitrogen Content, N/VSS (%)	0.09
Phosphorus Content, P/VSS (%)	0.03
TSS Content of Poly-F	3.23

This document is the property of CH2M HILL, Inc.
The expression of the information contained in th
document is protected under U.S. copyright law.

Diurnal Peak Flow Conditions

Constituent	Influent	Effluent	
Flow (m3/day)	16	16	
Carbonaceous BOD5 (kg/day	85	24	
Particulate	32	19	
Heterotrophs	39	4	
PAOs	14	2	
PHA	0	0	
Filtrate	0	0	
COD (kg/day)	260	146	
Particulate Bio	5	0	
Particulate Non-Bio	98	90	
Decay Prod Aer/Anx	47	35	
Decay Prod Anaerobic	0	0	
Heterotrophs	64	7	
Autotrophs	5	2	
PAOs	40	11	
PHA	0	0	
Soluble Bio	0	0	
VFA	0	0	
Colloidal Bio	0	0	
Soluble Non-Bio	1	1	
Colloidal Non-Bio	0	0	
TSS (kg/day)	320	194	
Biodegradable	4	0	
Non-Biodegradable	144	139	
Decay Prod Aer/Anx	37	27	
Decay Prod Anaerobic	0	0	
Metal Hydroxide	0	0	
Metal Phosphate	0	0	
Heterotrophs	50	5	
Autotrophs	4	2	
PAOs	31	9	
PHA	0	0	
Poly-P	49	11	
VSS (kg/day)	182	102	
Biodegradable	4	0	
Non-Biodegradable	69	63	
Decay Prod Aer/Anx	33	25	
Decay Prod Anaerobic	0	0	
Metal Hydroxide	0	0	
Heterotrophs	45	5	
Autotrophs	4	1	
PAOs	28	8	
PHA	0	0	
TKN (kg-N/day)	13	10	
NH_3-N (kg-N/day)	0	1	
Particulate Bio Org N	0	0	
Non-Bio Part Org N	4	5	
Decay Prod Aer/Anx	2	2	
Decay Prod Anaerobic	4	0	
Heterotrophs	4	0	
Autotrophs	0	0	
PAOs	2	1	
Non-Bio Soluble Org. N	0	0	
Non-Bio Colloidal Org. N	0	0	
Soluble Bio Org N	0	0	
Colloidal Bio Org N	0	0	
NO_3-N (kg-N/day)	0	5	
TP (kg-P/day)	21	18	
Bio Particulate	0	0	
Non-Bio Particulate	1	1	
Decay Prod Aer/Anx	1	1	
Decay Prod Anaerobic	0	0	
Metal Phosphate	0	0	
Heterotrophs	1	0	
Autotrophs	0	0	
PAOs	1	0	
Poly-P	15	3	
Ortho-PO_4	1	12	
Alkalinity (kg/day as $CaCO_3$)	8	0	
H_2S (kg/day)	0	0	
BOD_5 (mg/L)	5,303	1,522	
COD (mg/L)	16,261	9,112	
TSS (mg/L)	20,000	12,114	
VSS (mg/L)	11,421	6,383	
TKN (mg-N/L)	827	613	
NH_3-N (mg-N/L)	1	77	
NO_3-N (mg-N/L)	14	287	
TP (mg-P/L)	1,289	1,129	
Alkalinity (mg/L as CaCO3)	510	0	
H_2S (mg/L)	0	0	

This document is the property of CH2M HILL, Inc.
The expression of the information contained in th
document is protected under U.S. copyright law.

Model Results Summary for Alternative 4, Plant 5 Conventional WWTP

Projected 2028 Average Daily Flow = 140 m^3/day

Projected 2028 Maximum Month Flow = 196 m^3/day

Estimated Equipment Sizing:

- 3 process reactors at 167 m^3 each
- 2 circular clarifiers at 2.7 m diameter each
- 492 m^3 total aerobic digester volume

Use Instructions: See Comment in this cell.

Linked Model Input	Current Run:	Comments	Scenarios	Comments		Comments		Comments		Comments
Flow (m3/day)	196	MM	196	MM	196	MM	140	AD Flow	147	75% of MM
Diurnal Flow Peaking Factor	1.43	MxD:MM	1.43	MxD:MM	1.43	MxD:MM	2	MxD:AD	1.43	MxD:MM
CBOD5 (kg/day)	157	MM loading	157	MM loading	157	MM loading	112	AD Loading	118	75% of MM
TSS (kg/day)	176	MM loading	176	MM loading	176	MM loading	126	AD Loading	132	75% of MM
% VS	75%		75%		75%		75%		75%	
TKN (kg/day)	29	MM loading	29	MM loading	29	MM loading	21	AD Loading	22	75% of MM
Ammonia -N (kg/day)	18	MM loading	18	MM loading	18	MM loading	13	AD Loading	13	75% of MM
Total Phosphate - P (kg/day)	5	MM loading	5	MM loading	5	MM loading	3	AD Loading	4	75% of MM
Alkalinity (kg/day)	196	Assumed at 1000 mg/L	196	Assumed at 1000 mg/L	196	Assumed at 1000 mg/L	140	Assumed at 1000 mg/L	147	Assumed at 1000 mg/L
Hydrogen Sulfide (kg/day)	5	Assumed at 24 mg/L	5	Assumed at 24 mg/L	5	Assumed at 24 mg/L	3	Assumed at 24 mg/L	4	Assumed at 24 mg/L
Number of Aeration Basin Trains Online	3		3		3		3		3	
Volume per Train (m3)	167		167		167		167		167	
Total Aeration Basin Volume in Service (m3)	500		500		500		500		500	
SRT	10		10		10		10		10	
System pH	7.2		7.2		7.2		7.2		7.2	
Temperature °C	14	Minimum Month	14	Minimum Month	24.6	Maximum month	16.8	Annual average	14	Minimum Month
Nitrified Recycle Rate (% of Aer Basin influent flow)	605%		605%		615%		580%		590%	
Number of Secondary Clarifiers Online	2		2		2		2		1	
Surface Area per Secondary Clarifier (sq m)	5.57		5.57		5.57		5.57		5.57	
Total Secondary Clarifier Area (sq m)	11.1		11.1		11.1		11.1		5.6	
Secondary Clarifier Diameter (m)	2.66		2.66		2.66		2.66		2.66	
SVI (mL/g)	150		150		150		150		150	
Average Secondary Effluent TSS (mg/L)	15	Fixed	15	Fixed	15	Fixed	15	Fixed	15	Fixed
Peak Secondary Effluent TSS (mg/L)	20	Fixed	20	Fixed	20	Fixed	20	Fixed	20	Fixed
Average RAS Underflow Rate (% of Inf Q)	45.8%	Calculated	45.8%	Calculated	45.8%	Calculated	44.0%	Calculated	44.3%	Calculated
Peak RAS Underflow Rate (% of Inf Q)	57.3%	Calculated	57.3%	Calculated	56.4%	Calculated	42.7%	Calculated	55.8%	Calculated
Thickener Solids Capture (%)	85%		85%		85%		85%		85%	
Thickened Sludge Concentration (mg/L)	20,000		20,000		20,000		20,000		20,000	
AerDig1 Volume (m3)	492.1		492.1		492.1		492.1		492.1	
AerDig1 Temperature (°C)	14	Minimum Month	14	Minimum Month	24.6	Maximum month	16.8	Annual average	14	Minimum Month
AerDig1 DO (mg/L)	2		2		2		2		2	
AerDig1 % Denitrification	20%		20%		20%		20%		20%	
Dewatering Solids Capture (%)	95%		95%		95%		95%		95%	
Dewatered Sludge Concentration (%)	20%		20%		20%		20%		20%	
Results										
SRT	10.0		10.0		10.0		10.0		10.0	
Final Anoxic Zone NO3	0.13	want < 0.5	0.13	want < 0.5	0.06	want < 0.5	0.08	want < 0.5	0.11	want < 0.5
Secondary Effluent TSS (mg/L)	15.0	want < 60 (goal = 42)	15.0	want < 60 (goal = 42)	15.0	want < 60 (goal = 42)	15.0	want < 60 (goal = 42)	15.0	want < 60 (goal = 42)
Secondary Effluent CBOD5 (mg/L)	4.71	want < 60 (goal = 42)	4.71	want < 60 (goal = 42)	4.01	want < 60 (goal = 42)	4.44	want < 60 (goal = 42)	4.61	want < 60 (goal = 42)
Secondary Effluent COD (mg/L)	60.3	want < 150, (goal = 105.0)	60.3	want < 150, (goal = 105.0)	59.5	want < 150, (goal = 105.0)	60.0	want < 150, (goal = 105.0)	60.2	want < 150, (goal = 105.0)
Secondary Effluent TN (mg/L)	16.4	want < 70, (goal = 49.0)	16.4	want < 70, (goal = 49.0)	16.1	want < 70, (goal = 49.0)	16.2	want < 70, (goal = 49.0)	16.3	want < 70, (goal = 49.0)
Secondary Effluent NH3-N (mg/L)	0.15		0.15		0.08		0.09		0.15	
Secondary Effluent NO3-N (mg/L)	12.7	want < 18 (goal is 12.6)	12.7	want < 18 (goal is 12.6)	12.6	want < 18 (goal is 12.6)	12.6	want < 18 (goal is 12.6)	12.6	want < 18 (goal is 12.6)
Secondary Effluent TP (mg/L)	12.14	want < 15 (goal = 10.5)	12.20	want < 15 (goal = 10.5)	8.68	want < 15 (goal = 10.5)	11.71	want < 15 (goal = 10.5)	13.26	want < 15 (goal = 10.5)
Influent COD (mg/L)	1,575	~1320 mg/L per ops data	1,575	~1320 mg/L per ops data	1,575	~1320 mg/L per ops data	1,576	~1320 mg/L per ops data	1,577	~1320 mg/L per ops data
Corresponding Average MLSS (mg/L)	3,304	want < 3400 at MM	3,305	want < 3400 at MM	3,362	want < 3400 at MM	2,407	want < 3400 at MM	2,508	want < 3400 at MM
Secondary Influent MLSS (mg/L)	3,285		3,285		3,345		2,389		2,490	
Ntirified Recycle Rate (m3/day)	1,296		1,296		1,317		923		979	
Solids Loading Rate To Secondary Clarifiers (kg/day-sq m)	92.02		92.01		93.66		49.12		107.00	
RAS Rate (m3/day)	98.11		98.03		98.03		70.02		73.52	
Corresponding WAS (kg/day)	162.16		162.19		165.05		118.16		123.12	
Combined Thickened Feed Sludge to Aerobic Dig. (kg/day)	138		138		140		100		105	
Digester Volatile Solids Loading Rate (kg/day-m3)	0.16		0.16		0.15		0.11		0.12	
Digester SRT	71.40		71.38		70.15		97.98		94.04	
Model Prediction of VS Destruction (combined)	45.04%		45.04%		43.06%		46.24%		46.45%	
Digester Alkalinity Limited?	yes		yes		yes		yes		yes	
SOUR in Digester (mg O2/hour/gram TS)	0.35	want < 1.5 at 20 C, goal = 1.13	0.35	want < 1.5 at 20 C, goal = 1.13	0.32	want < 1.5 at 20 C, goal = 1.13	0.27	want < 1.5 at 20 C, goal = 1.13	0.29	want < 1.5 at 20 C, goal = 1.13
Dewatered Solids from Plant (kg/day)	79.09		79.11		79.49		54.98		58.02	
PBNR AOR (kg/day)	240		240		249		173		180	
PBNR SOR (kg/day)	698		698		831		475		482	
PBNR Total Required Air Rate in Zones 3-5 (N*m3/hr)	335		335		408		245		244	

This document is the property of CH2M HILL, Inc.
The expression of the information contained in this
document is protected under U.S. copyright law.

Stoichiometric Parameters		Value	Default	Units
Hydrolysis of Particulate Substrate: X_S				
Production of Soluble Inert COD: S_I	f_{SI}	0.00		g COD/g COD
Heterotrophic Organisms: X_H				
Yield	Y_H	0.6660		g COD/g COD
Fraction of Lysis Inerts	f_{XI}	0.08		g COD/g COD
Phosphorus Accumulating Organisms: X_{PAO}				
Yield (biomass/PHA)	Y_{PAO}	0.6250		g COD/g COD
Phosphate release per PHA Store	Y_{PO4}	0.40		g P/g COD
PHA requirement for PP storage	Y_{PHA}	0.20		g COD/g P
Fraction of Lysis Inerts	f_{XI}	0.08		g COD/g COD
Autotrophic Organisms: X_{AUT}				
Yield per NO_3-N	Y_A	0.19		g COD/g N
Fraction of Lysis Inerts	f_{XI}	0.08		g COD/g COD
Methanol Degraders-Population 1: X_{M1}				
Yield per MeOH COD	Y_{M1}	0.58		g COD/g COD
Fraction of Lysis Inerts	f_{XI}	0.10		g COD/g COD
Methanol Degraders-Population 2: X_{M2}				
Yield per MeOH COD	Y_{M2}	0.36		g COD/g COD
Fraction of Lysis Inerts	f_{XI}	0.10		g COD/g COD

Conversion Factors for Conservation Equatior		Value	Default	Units
Nitrogen Content of:	Check Delta	0.00		
Soluble Inert COD: S_I	i_{NSI}	0.0600	0.01	g N/g COD
Fermentable Substrate: S_F	i_{NSF}	0.0393	0.03	g N/g COD
Inert Particulate COD: X_I	i_{NXI}	0.0402	0.02	g N/g COD
Slowly Biodegradable Substrate: X_S	i_{NXS}	0.0393	0.04	g N/g COD
Biomass: X_H, X_{PAO}, X_{AUT}, X_{m1}, X_{m2}	i_{NBM}	0.0606	0.07	g N/g COD
Decay Products:, $X_{d,aa}$	i_{NXdaa}	0.0606	0.02	g N/g COD
Phosphorus Content of:	Check Delta	0.00		
Soluble Inert COD: S_I	i_{PSI}	0.0000	0.00	g P/g COD
Fermentable Substrate: S_F	i_{PSF}	0.0000	0.01	g P/g COD
Inert Particulate COD: X_I	i_{PXI}	0.0073	0.01	g P/g COD
Slowly Biodegradable Substrate: X_S	i_{PXS}	0.0053	0.01	g P/g COD
Biomass: X_H, X_{PAO}, X_{AUT}	i_{PBM}	0.0200	0.02	g P/g COD
Decay Products:, $X_{d,aa}$	i_{PXdaa}	0.0200	1.02	g P/g COD
TSS to COD Ratio for:				
Inert Particulate COD: X_I	i_{TSSXI}	0.7825	0.75	g TSS/g COD
Slowly Biodegradable Substrate: X_S	i_{TSSXS}	0.7825	0.75	g TSS/g COD
Biomass: X_H, X_{PAO}, X_{AUT}, X_{m1}, X_{m2}	i_{TSSBM}	0.7825	0.90	g TSS/g COD
Decay Products: $X_{d,aa}$	$i_{TSSXdaa}$	0.7825	0.75	g TSS/g COD

Nitrogen Ratio Adjustment			Ratio
Fermentable Substrate: S_F	i_{NSF}	0.0393	
Slowly Biodegradable Substrate: X_S	i_{NXS}	0.0393	1.00
Alternate Nitrogen Ratic			
Fermentable Substrate: S_F	i_{NSF}	0.0535	
Slowly Biodegradable Substrate: X_S	i_{NXS}	0.0357	1.50

Kinetic Parameters		Unit	Typical Values 20 °C	Typical Values 10 °C	Temperature 14.0 deg. C
Hydrolysis of Particulate Substrate: X_S					
k_h	(Hydrolysis Rate)	1/day	3.00	2.00	2.35
n_{NO3}	(Anoxic Reduction Factor)		0.60	0.60	0.60
n_{fe}	(Anaerobic Reduction Factor)		0.40	0.40	0.40
K_{O2}	(Oxygen Inhibition)	g O_2/m^3	0.20	0.20	0.20
K_{NO3}	(Nitrate Inhibition)	g N/m^3	0.50	0.50	0.50
K_x	(Particulate Inhibition)	g COD/g COD	0.10	0.10	0.10
Hydrolysis of Decay Products: X_{daa}					
K_{hdaa}	(Hydrolysis Rate)	1/d	1.20		0.94
K_{O2Ydaa}	(Oxygen Inhibition)	g O_2/m^3	0.10		0.10
$K_{NO3Ydaa}$	(Nitrate Inhibition)	g N/m^3	0.10		0.10
K_{Xdaa}	(Particulate Inhibition)	g X_{daa}/g X_H	0.10		0.10
Heterotrophic Organisms: X_H					
μ_H	(Max Growth Rate)	1/day	6.00	3.00	2.60
q_{fe}	(Max Fermentation Rate)	g COD/(g COD*d)	3.00	1.50	1.98
n_{NO3}	(Anoxic Reduction Factor)		0.80	0.80	0.80
b_H	(Decay Rate)	1/day	0.40	0.20	0.50
K_{O2}	(Oxygen Inhibition)	g O_2/m^3	0.20	0.20	0.20
K_F	(Growth on S_F)	g COD/m^3	4.00	4.00	2.00
K_{fe}	(Fermentation of S_F)	g COD/m^3	4.00	4.00	4.00
K_A	(Growth on S_A)	g COD/m^3	4.00	4.00	2.00
K_{NO3}	(Anoxic Growth)	g N/m^3	0.50	0.50	0.50
K_{NH4}	(Nitrogen Inhibition)	g N/m^3	0.05	0.05	0.05
K_P	(Phosphorus Inhibition)	g P/m^3	0.01	0.01	0.01
K_{ALK}	(Alkalininty Inhibition)	mole HCO_3^-/m^3	0.10	0.10	0.10
Phosphorus Accumulating Organisms: X_{PAO}					
q_{PHA}	(X_{PHA} Storage Rate)	g X_{PHA}/(g X_{PAO}*d)	3.00	2.00	6.00
q_{PP}	(X_{PP} Storage Rate)	g X_{PP}/(g X_{PAO}*d)	1.50	1.00	1.18
μ_{PAO}	(Max Growth Rate)	1/day	1.00	0.67	0.79
n_{NO3}	(Anoxic Reduction Factor)		0.60	0.60	0.60
b_{PAO}	(X_{PAO} Decay Rate)	1/day	0.20	0.10	0.10
b_{PP}	(X_{PP} Decay Rate)	1/day	0.20	0.10	0.10
b_{PHA}	(X_{PHA} Decay Rate)	1/day	0.20	0.10	0.10
K_{O2}	(Oxygen Inhibition)	g O_2/m^3	0.20	0.20	0.20
K_{NO3}	(Anoxic Growth)	g N/m^3	0.50	0.50	0.50
K_A	(Growth on S_A)	g COD/m^3	4.00	4.00	2.00
K_{NH4}	(Nitrogen Inhibition)	g N/m^3	0.05	0.05	0.0050
K_{PS}	(Phosphorus Inhibition of PP)	g P/m^3	0.20	0.20	0.20
K_P	(Phosphorus Inhibition of Growth)	g P/m^3	0.01	0.01	0.0050
K_{ALK}	(Alkalininty Inhibition)	mole HCO_3^-/m^3	0.10	0.10	0.10
K_{PP}	(Polyphosphate Inhibition)	g X_{PP}/g X_{PAO}	0.01	0.01	0.02
K_{MAX}	(Max Ratio of X_{PP}/X_{PAO})	g X_{PP}/g X_{PAO}	0.34	0.34	0.34
K_{IPP}	(Inhibition of PP Storage)	g X_{PP}/g X_{PAO}	0.02	0.02	0.02
K_{PHA}	(Saturation for PHA)	g X_{PHA}/g X_{PAO}	0.01	0.01	0.01
Autotrophic Organisms: X_{AUT}					
μ_{AUT}	(Maximum Growth Rate)	1/day	1.00	0.35	0.42
b_{AUT}	(Decay Rate)	1/day	0.15	0.05	0.04
K_{O2}	(Oxygen Inhibition)	g O_2/m_3	0.50	0.50	0.50
K_{NH4}	(Nitrogen Inhibition: SUBSTRATE)	g N/m^3	1.00	1.00	0.49
K_{ALK}	(Alkalininty Inhibition)	mole HCO_3^-/m^3	0.50	0.50	0.04
K_P	(Phosphorus Inhibition of Growth)	g P/m^3	0.01	0.01	0.0050
Precipitation					
k_{PRE}	(Rate of Phosphorus Precipitation)	m^3/(g $Me(OH)_3$*d)	1.00	1.00	2.00
k_{RED}	(Rate of Phosphous Redissolution)	1/day	0.60	0.60	0.10
K_{ALK}	(Alkalininty Inhibition)	mole HCO_3^-/m^3	0.50	0.50	0.50
Methanol Degrading Organisms - Population 1					
μ_{M1}	(Maximum Growth Rate)	1/day	3.88		7.00
n_{NO3M1}	(Anoxic Reduction Factor)		0.21		0.20
b_{M1}	(Decay Rate)	1/day	0.18		0.20
K_{O2M1}	(Oxygen Inhibition)	g O_2/m^3	0.20		0.50
K_{M1}	(Growth on Methanol)	g COD/m^3	4.00		4.00
K_{NO3M1}	(Anoxic Growth)	g N/m^3	0.50	0.50	0.80
K_{NH4M1}	(Nitrogen Inhibition)	g N/m^3	0.05		0.05
K_{ALKM1}	(Alkalinity Inhibition)	mole HCO_3^-/m^3	0.10		0.10
K_{PM1}	(Phosphorus Inhibition)	g P/m^3	0.01		0.01
Methanol Degrading Organisms - Population 2					
μ_{M2}	(Maximum Growth Rate)	1/day	1.72		7.00
n_{NO3M2}	(Anoxic Reduction Factor)		0.76		0.80
b_{M2}	(Decay Rate)	1/day	0.25		0.25
K_{O2M2}	(Oxygen Inhibition)	g O_2/m^3	0.20		0.50
K_{M2}	(Growth on Methanol)	g COD/m^3	4.00		1.00
K_{NO3M2}	(Anoxic Growth)	g N/m^3	0.50	0.50	0.50
K_{NH4M2}	(Nitrogen Inhibition)	g N/m^3	0.05		0.05
K_{ALKM2}	(Alkalinity Inhibition)	mole HCO_3^-/m^3	0.10		0.10
K_{PM2}	(Phosphorus Inhibition)	g P/m^3	0.01		0.01

This document is the property of CH2M HILL, Inc.
The expression of the information contained in thi
document is protected under U.S. copyright law.

Mass Balance for Average Flow Conditions

Constituent	Raw Wastewater (RW)	Main Recycle Influent (Recyl)	Main Recycled Stream (Recycle)	Main Combined Recycle Effluent (RecyE)	Main Bioreactor Influent (BI)	Main Secondary Clarifier Influent (SI)	Main Secondary Clarifier Effluent (SE)	Plant Effluent (PLE)	Main WAS	GBT WAS Thickener Influent (TWASI)	GBT Thickened WAS (TWAS)	AerDigt Aerobic Digester Influent (ADI)	AerDigt Aerobic Digester Effluent (ADE)	BFP Dewatering Influent (DWI)	BFP Dewatered Sludge (DWE)	Biosolids to Dispoal	GBT WAS Thickening Recycle (TWASR)	BFP Dewatering Recycle (DWR)	Recy Combined Discharge	Ender
Flow (m3/day)	196	196	18	214	214	312	196	196	18	18	7	7	7	7	0	0	12	6	18	
Carbonaceous BOD_5 (kg/day)	158	158	7	165	165	286	1	1	45	45	38	38	10	10	10	10	7	1	7	
COD (kg/day)	309	309	24	333	333	859	12	12	134	134	114	114	63	63	59	59	21	3	24	
TSS (kg/day)	177	177	28	206	206	1,026	3	3	162	162	138	138	83	83	79	79	24	4	28	
VSS (kg/day)	133	133	16	149	149	594	2	2	94	94	80	80	44	44	42	42	14	2	16	
TKN (kg-N/day)	30	30	2	31	31	46	1	1	7	7	6	6	4	4	4	4	1	1	2	
NH_3-N (kg-N/day)	18	18	1	18	18	0	0	0	0	0	0	0	1	1	0	0	0	1	1	
NO_3-N (kg-N/day)	0	0	2	2	2	4	2	2	0	0	0	0	2	2	0	0	0	2	2	
TP (kg-P/day)	5	5	7	12	12	61	2	2	9	9	8	8	8	8	3	3	1	5	7	
Alkalinity (kg/day as $CaCO_3$)	196	196	8	204	204	222	139	139	13	13	5	5	0	0	0	0	8	0	8	
H_2S (kg/day)	5	5	0	5	5	0	0	0	0	0	0	0	0	0	0	0	0	0	0	
BOD_5 (mg/L)	803	803	404	770	770	916	5	5	2,445	2,445	5,573	5,573	1,517	1,517	25,111	25,111	585	81	404	
COD (mg/L)	1,575	1,575	1,326	1,554	1,554	2,749	60	60	7,261	7,261	16,494	16,494	9,086	9,086	149,693	149,693	1,773	527	1,326	
TSS (mg/L)	904	904	1,575	961	961	3,285	15	15	8,772	8,772	20,000	20,000	12,080	12,080	200,000	200,000	2,098	641	1,575	
VSS (mg/L)	678	678	900	697	697	1,902	9	9	5,080	5,080	11,582	11,582	6,365	6,365	105,384	105,384	1,215	338	900	
TKN (mg-N/L)	151	151	100	146	146	146	4	4	386	386	876	876	614	614	8,907	8,907	95	109	100	
NH_3-N (mg-N/L)	90	90	28	85	85	0	0	0	0	0	0	0	78	78	78	78	0	78	28	
NO_3-N (mg-N/L)	0	0	112	9	9	13	13	13	13	13	13	13	288	288	288	288	13	288	112	
TP (mg-P/L)	26	26	369	55	55	196	12	12	504	504	1,135	1,135	1,135	1,135	6,688	6,688	129	797	369	
Alkalinity (mg/L as CaCO3)	999	999	456	953	953	712	712	712	712	712	712	712	0	0	0	0	712	0	456	
H_2S (mg/L)	24	24	0	22	22	0	0	0	0	0	0	0	0	0	0	0	0	0	0	

Mass Balance for Diurnal Peak Flow Conditions

Constituent	Raw Wastewater (RW)	Main Recycle Influent (Recyl)	Main Recycled Stream (Recycle)	Main Combined Recycle Effluent (RecyE)	Main Bioreactor Influent (BI)	Main Secondary Clarifier Influent (SI)	Main Secondary Clarifier Effluent (SE)		Main WAS	GBT WAS Thickener Influent (TWASI)	GBT Thickened WAS (TWAS)	AerDigt Aerobic Digester Influent (ADI)	AerDigt Aerobic Digester Effluent (ADE)	BFP Dewatering Influent (DWI)	BFP Dewatered Sludge (DWE)		GBT WAS Thickening Recycle (TWASR)	BFP Dewatering Recycle (DWR)	Recy Combined Discharge	
Flow (m3/day)	280	280	62	342	342	538	313	313	29	29	11	11	11	11	3	3	18	44	62	
Carbonaceous BOD_5 (kg/day)	205	205	14	219	219	341	1	1	44	44	59	59	17	17	68	68	10	4	14	
COD (kg/day)	401	401	56	457	457	1,685	19	19	214	214	182	182	101	101	403	403	33	23	56	
TSS (kg/day)	229	229	68	297	297	2,048	6	6	263	263	223	223	135	135	538	538	39	28	68	
VSS (kg/day)	172	172	37	209	209	1,170	4	4	150	150	128	128	71	71	284	284	23	15	37	
TKN (kg/day)	38	38	7	45	45	87	1	1	11	11	9	9	7	7	24	24	2	5	7	
NH_3-N (kg-N/day)	23	23	3	26	26	1	0	0	0	0	0	0	1	1	0	0	0	3	3	
NO_3-N (kg-N/day)	0	0	13	13	13	8	4	4	0	0	0	0	3	3	1	1	0	13	13	
TP (kg-P/day)	6	6	39	46	46	170	27	27	18	18	14	14	13	13	18	18	4	35	39	
Alkalinity (kg/day as $CaCO_3$)	255	255	9	264	264	274	160	160	15	15	6	6	0	0	0	0	9	0	9	
H_2S (kg/day)	6	6	0	6	6	0	0	0	0	0	0	0	0	0	0	0	0	0	0	
BOD_5 (mg/L)	730	730	226	639	639	634	4	4	1,511	1,511	5,308	5,308	1,517	1,517	25,111	25,111	588	81	226	
COD (mg/L)	1,431	1,431	904	1,335	1,335	3,128	60	60	7,402	7,402	16,263	16,263	9,086	9,086	149,693	149,693	1,840	527	904	
TSS (mg/L)	818	818	1,093	868	868	3,804	20	20	9,074	9,074	20,000	20,000	12,080	12,080	200,000	200,000	2,215	641	1,093	
VSS (mg/L)	614	614	604	612	612	2,172	11	11	5,182	5,182	11,422	11,422	6,365	6,365	105,384	105,384	1,265	338	604	
TKN (mg-N/L)	137	137	113	132	132	161	5	5	378	378	829	829	614	614	8,907	8,907	95	109	113	
NH_3-N (mg-N/L)	82	82	56	77	77	1	1	1	1	1	1	1	78	78	78	78	1	78	56	
NO_3-N (mg-N/L)	0	0	210	38	38	14	14	14	14	14	14	14	288	288	288	288	14	288	210	
TP (mg-P/L)	0	23	631	133	133	315	87	87	633	633	1,292	1,292	1,135	1,135	6,688	6,688	220	797	631	
Alkalinity (mg/L as CaCO3)	908	908	146	770	770	509	509	509	509	509	509	509	0	0	0	0	509	0	146	
H_2S (mg/L)	22	22	0	18	18	0	0	0	0	0	0	0	0	0	0	0	0	0	0	

This document is the property of CH2M HILL, Inc.
The expression of the information contained in this
document is protected under U.S. copyright law.

AerDig1

Aerobic Digester Module

Average Conditions

Constituent	Influent	Effluent
Flow (m3/day)	7	7
Carbonaceous BOD_5 (kg/day)	38	10
Particulate	4	8
Heterotrophs	27	2
PAOs	7	1
PHA	0	0
Filtrate	0	0
COD (kg/day)	114	63
Particulate Bio	3	0
Particulate Non-Bio	39	39
Decay Prod Aer/Anx	4	15
Decay Prod Anaerobic	0	0
Heterotrophs	45	3
Autotrophs	3	1
PAOs	20	5
PHA	0	0
Soluble Bio	0	0
VFA	0	0
Colloidal Bio	0	0
Soluble Non-Bio	0	0
Colloidal Non-Bio	0	0
TSS (kg/day)	138	83
Biodegradable	2	0
Non-Biodegradable	60	60
Decay Prod Aer/Anx	3	12
Decay Prod Anaerobic	0	0
Metal Hydroxide	0	0
Metal Phosphate	0	0
Heterotrophs	35	2
Autotrophs	2	1
PAOs	16	4
PHA	0	0
Poly-P	19	5
VSS (kg/day)	80	44
Biodegradable	2	0
Non-Biodegradable	27	27
Decay Prod Aer/Anx	3	11
Decay Prod Anaerobic	0	0
Metal Hydroxide	0	0
Heterotrophs	32	2
Autotrophs	2	1
PAOs	14	3
PHA	0	0
TKN (kg-N/day)	6	4
NH_3-N (kg-N/day)	0	1
Particulate Bio Org N	0	0
Non-Bio Part Org N	2	2
Decay Prod Aer/Anx	0	1
Decay Prod Anaerobic	0	0
Heterotrophs	3	0
Autotrophs	0	0
PAOs	1	0
Non-Bio Soluble Org. N	0	0
Non-Bio Colloidal Org. N	0	0
Soluble Bio Org N	0	0
Colloidal Bio Org N	0	0
NO_3-N (kg-N/day)	0	2
TP (kg-P/day)	8	8
Bio Particulate	0	0
Non-Bio Particulate	0	1
Decay Prod Aer/Anx	0	0
Decay Prod Anaerobic	0	0
Metal Phosphate	0	0
Heterotrophs	1	0
Autotrophs	0	0
PAOs	0	0
Poly-P	6	1
Ortho-PO_4	0	5
Alkalinity (kg/day as CaCO)	5	0
H_2S (kg/day)	0	0
BOD_5 (mg/L)	5,573	1,517
COD (mg/L)	16,494	9,086
TSS (mg/L)	20,000	12,080
VSS (mg/L)	11,582	6,365
TKN (mg-N/L)	876	614
NH_3-N (mg-N/L)	0	78
NO_3-N (mg-N/L)	13	288
TP (mg-P/L)	1,135	1,135
Alkalinity (mg/L as CaCO3)	712	0
H_2S (mg/L)	0	0

Constituent	Influent	Effluent
Flow (m3/day)	7	7
Carbonaceous BOD_5 (kg/day)	38	10
Particulate	4	8
Heterotrophs	27	2
PAOs	7	1
PHA	0	0
Filtrate	0	0
COD (kg/day)	114	63
Particulate Bio	3	0
Particulate Non-Bio	39	39
Decay Prod Aer/Anx	4	15
Decay Prod Anaerobic	0	0
Heterotrophs	45	3
Autotrophs	3	1
PAOs	20	5
PHA	0	0
Soluble Bio	0	0
VFA	0	0
Colloidal Bio	0	0
Soluble Non-Bio	0	0
Colloidal Non-Bio	0	0
TSS (kg/day)	138	83
Biodegradable	2	0
Non-Biodegradable	60	60
Decay Prod Aer/Anx	3	12
Decay Prod Anaerobic	0	0
Metal Hydroxide	0	0
Metal Phosphate	0	0
Heterotrophs	35	2
Autotrophs	2	1
PAOs	16	4
PHA	0	0
Poly-P	19	5
VSS (kg/day)	80	44
Biodegradable	2	0
Non-Biodegradable	27	27
Decay Prod Aer/Anx	3	11
Decay Prod Anaerobic	0	0
Metal Hydroxide	0	0
Heterotrophs	32	2
Autotrophs	2	1
PAOs	14	3
PHA	0	0
TKN (kg-N/day)	6	4
NH_3-N (kg-N/day)	0	1
Particulate Bio Org N	0	0
Non-Bio Part Org N	2	2
Decay Prod Aer/Anx	0	1
Decay Prod Anaerobic	0	0
Heterotrophs	3	0
Autotrophs	0	0
PAOs	1	0
Non-Bio Soluble Org. N	0	0
Non-Bio Colloidal Org. N	0	0
Soluble Bio Org N	0	0
Colloidal Bio Org N	0	0
NO_3-N (kg-N/day)	0	2
TP (kg-P/day)	8	8
Bio Particulate	0	0
Non-Bio Particulate	0	1
Decay Prod Aer/Anx	0	0
Decay Prod Anaerobic	0	0
Metal Phosphate	0	0
Heterotrophs	1	0
Autotrophs	0	0
PAOs	0	0
Poly-P	6	1
Ortho-PO_4	0	5
Alkalinity (kg/day as CaCO)	5	0
H_2S (kg/day)	0	0

This document is the property of CH2M HILL, Inc.
The expression of the information contained in th.
document is protected under U.S. copyright law.

Facility Operating Parameters		
Bioreactor Volume, m3		492.05
Minimum Valid SRT, days		3.00
SRT, Days		71.40
Temperature, oC		14
Volatile Solids Loading (kg VSS/m3-day)		0.16
Volatile Solids Reduction, %		45.04%
TSS Reduction %		39.60%
SOUR mg-O2/(g-VSS x hour) at 20 oC		0.67
SOUR mg-O2/(g-TSS x hour) at 20 oC		0.35
SOUR mg-O2/(g-VSS x hour) with nitrification at 20 oC		0.94
SOUR mg-O2/(g-TSS x hour) with nitrification at 20 oC		0.50
Total AOR (kgO2/day)		61
% denitrification		20%
Nutrients		
Nitrogen Released Due to Digestion (transformed to NH3) (kg/day)		2.93
Nitrogen Nitrified (Kg/day)		2.39
Nitrogen Denitrified (Kg/day)		0.50
Alkalinity in Feed (Kg/day)		5
Alkalinity Released Due to Digestion (Kg/day)		11
Alkalinity Lost Through Nitrification (Kg/day)		17
Alkalinity Produced Through Denitrification (Kg/day)		2
Alkalinity Discharged (Kg/day		0
Kinetic Limitation on Nitrification		
DO, mg/L		2
Maximum Specific Growth Rate (μ_{nmax}), Day^{-1} at Operational DO		0.3408
Ammonia in Digester Effluent Due to Kinetic Limitations		
	a	0.28
	b	-881.51
	c	12.27
Effluent Ammonia (mg-N/L) for Kinetic Limitation		0.01
Potential Nitrification Associated with Kinetics (Kg/day)		2.93

Aerobic Biological Kinetics	
Parameter	**Temperature**
Heterotrophs	
Maximum Specific Growth Rate (μ_{Hmax}), Day^{-1}	2.60
Half Saturation for Organics (K_S), mg BOD_5/L	3.13
Half Saturation for Organics (K_S), mg Bio COD/L	5.00
True Yield (Y_H), mg COD/mg COD (aerobic)	0.67
Decay Rate (b_H), Day^{-1}	0.22
Inactive Fraction (f_D)	0.19
Volatile Fraction, % of TSS	0.90
COD/VSS Ratio, mg COD/mg VSS	1.42
Nitrogen Content, N/VSS (%)	0.09
Phosphorus Content, P/VSS (%	0.03
Autotrophs	
Maximum Specific Growth Rate (μ_{Amax}), Day^{-1}	0.43
Half Saturation for NH_3-N (K_N), mg-N/L	0.49
Half Saturation for O_2 (K_O), mg-O_2/L	0.50
True Yield (Y_A), mg TSS/mg NH_3-N	0.15
True Yield (Y_A), mg COD/mg NH_3-N	0.19
Decay Rate (b_A), Day^{-1}	0.04
Volatile Fraction, % of TSS	0.90
COD/VSS Ratio, mg COD/mg VSS	1.42
Nitrogen Content, N/VSS (%)	0.09
Phosphorus Content, P/VSS (%	0.03
PAOs	
True Yield (Y_H), mg TSS/mg BOD_5	0.76
True Yield (Y_H), mg COD/mg COD	0.62
Decay Rate (b_H), Day^{-1}	0.04
Inactive Fraction (f_D)	0.19
Volatile Fraction, % of TSS	0.90
COD/VSS Ratio, mg COD/mg VSS	1.42
Nitrogen Content, N/VSS (%)	0.09
Phosphorus Content, P/VSS (%)	0.03
TSS Content of Poly-F	3.23

This document is the property of CH2M HILL, Inc.
The expression of the information contained in thi
document is protected under U.S. copyright law.

Diurnal Peak Flow Conditions

Constituent	Influent	Effluent	
Flow (m3/day)	11	11	
Carbonaceous BOD_5 (kg/day	59	17	
Particulate	22	13	
Heterotrophs	27	2	
PAOs	10	1	
PHA	0	0	
Filtrate	0	0	
COD (kg/day)	182	101	
Particulate Bio	4	0	
Particulate Non-Bio	68	63	
Decay Prod Aer/Anx	33	24	
Decay Prod Anaerobic	0	0	
Heterotrophs	45	5	
Autotrophs	3	1	
PAOs	28	8	
PHA	0	0	
Soluble Bio	0	0	
VFA	0	0	
Colloidal Bio	0	0	
Soluble Non-Bio	0	1	
Colloidal Non-Bio	0	0	
TSS (kg/day)	223	135	
Biodegradable	3	0	
Non-Biodegradable	100	97	
Decay Prod Aer/Anx	26	19	
Decay Prod Anaerobic	0	0	
Metal Hydroxide	0	0	
Metal Phosphate	0	0	
Heterotrophs	35	4	
Autotrophs	3	1	
PAOs	22	6	
PHA	0	0	
Poly-P	35	8	
VSS (kg/day)	128	71	
Biodegradable	3	0	
Non-Biodegradable	48	44	
Decay Prod Aer/Anx	23	17	
Decay Prod Anaerobic	0	0	
Metal Hydroxide	0	0	
Heterotrophs	32	3	
Autotrophs	2	1	
PAOs	20	6	
PHA	0	0	
TKN (kg-N/day)	9	7	
NH_3-N (kg-N/day)	0	1	
Particulate Bio Org N	0	0	
Non-Bio Part Org N	3	4	
Decay Prod Aer/Anx	1	1	
Decay Prod Anaerobic	3	0	
Heterotrophs	3	0	
Autotrophs	0	0	
PAOs	2	0	
Non-Bio Soluble Org. N	0	0	
Non-Bio Colloidal Org. N	0	0	
Soluble Bio Org N	0	0	
Colloidal Bio Org N	0	0	
NO_3-N (kg-N/day)	0	3	
TP (kg-P/day)	14	13	
Bio Particulate	0	0	
Non-Bio Particulate	1	1	
Decay Prod Aer/Anx	1	0	
Decay Prod Anaerobic	0	0	
Metal Phosphate	0	0	
Heterotrophs	1	0	
Autotrophs	0	0	
PAOs	1	0	
Poly-P	11	2	
Ortho-PO_4	1	9	
Alkalinity (kg/day as CaCO)	6	0	
H_2S (kg/day)	0	0	
BOD_5 (mg/L)	5,308	1,517	
COD (mg/L)	16,263	9,086	
TSS (mg/L)	20,000	12,080	
VSS (mg/L)	11,422	6,365	
TKN (mg-N/L)	829	614	
NH_3-N (mg-N/L)	1	78	
NO_3-N (mg-N/L)	14	288	
TP (mg-P/L)	1,292	1,135	
Alkalinity (mg/L as CaCO3)	509	0	
H_2S (mg/L)	0	0	

This document is the property of CH2M HILL, Inc.
The expression of the information contained in thi
document is protected under U.S. copyright law.

Model Results Summary for Alternative 4, Plant 6 Conventional WWTP

Projected 2028 Average Daily Flow = 117 m^3/day

Projected 2028 Maximum Month Flow = 164 m^3/day

Estimated Equipment Sizing:

- 3 process reactors at 140 m^3 each
- 2 circular clarifiers at 2.4 m diameter each
- 411 m^3 total aerobic digester volume

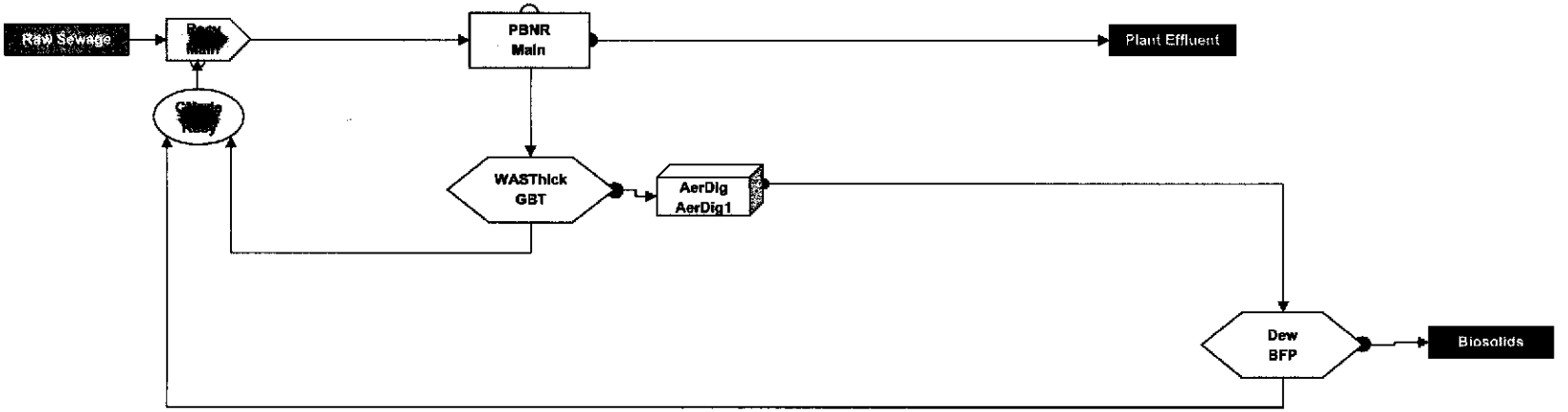

This document is the property of CH2M HILL, Inc.
The expression of the information contained in this
document is protected under U.S. copyright law.

Model Results Summary for Alternative 4, Plant 7 Conventional WWTP

Projected 2028 Average Daily Flow = 1,056 m^3/day

Projected 2028 Maximum Month Flow = 1,479 m^3/day

Estimated Equipment Sizing:

- 3 process reactors at 1,249 m^3 each
- 2 circular clarifiers at 7 m diameter each
- 3,671 m^3 total aerobic digester volume