RECEIVED
JAN 22 2009
U.S. TRADE AND DEVELOPMENT AGENCY

FEASIBILITY STUDY FOR THE INTEGRATED CLIMATOLOGY, AGRO-METEOROLOGICAL, AIR POLLUTION FORECAST AND WARNING, COMPUTATION AND TRAINING CENTER

FOR

THE ROMANIAN NATIONAL METEOROLOGICAL ADMINISTRATION

INTEROPERATE PROJECT

FINAL REPORT

This report was funded by the U.S. Trade and Development Agency (TDA), an export promotion agency of the United States Government. The opinions, findings, conclusions, or recommendations expressed in this document are those of the author(s) and do not necessarily represent the official position or policies of TDA

December, 2008

BURGESS & NIPLE, INC.

The U.S. Trade and Development Agency

The U.S. Trade and Development Agency (USTDA) advances economic development and U.S. commercial interests in developing and middle income countries. The agency funds various forms of technical assistance, early investment analysis, training, orientation visits and business workshops that support the development of a modem infrastructure and a fair and open trading environment.

USTDA's strategic use of foreign assistance funds to support sound investment policy and decision-making in host countries creates an enabling environment for trade, investment and sustainable economic development. Operating at the nexus of foreign policy and commerce, USTDA is uniquely positioned to work with U.S. firms and host countries in achieving the agency's trade and development goals. In carrying out its mission, USTDA gives emphasis to economic sectors that may benefit from U.S. exports of goods and services.

Mailing and Delivery Address: 1000 Wilson Boulevard, Suite 1600, Arlington, VA 22209-3901
Phone: 703—875--4357 Fax: 703—875—4009 Web site: www.ustda.gov email: infoustda.gov

TABLE OF CONTENTS

		Page
I.	EXECUTIVE SUMMARY	1
II.	EXISTING SYSTEMS AND TECHNICAL SOLUTIONS FOR INTEGRATION (TASKS 1 AND 2)	3
	A. Initial Meeting and Work Plan	3
	B. Model Usage for Existing and Future Conditions	3
	C. Numerical Weather Modeling in Romania – Current Situation	3
	D. Future Plans for Numerical Weather Prediction	11
	E. Agricultural Models	17
	F. Database Management	22
III.	COMPUTING NEEDS ASSESSMENT TO SUPPORT MODELS (TASK 3)	77
	A. General	77
	B. Introduction	78
	C. Assessment of Requirements and current Capabilities	79
	D. Proposed System	81
	E. Training Facility and Methods	91
IV.	METEOROLOGICAL TRAINING NEEDS ASSESSMENT (MET-TRAIN) (TASK 4)	82
	A. Background	82
	B. Needs	83
	C. Existing Courses	85
	D. Training Assessment and Recommendations	86
V.	EVALUATION OF THE SOCIAL, ECONOMIC, ENVIRONMENTAL AND POLITICAL IMPACT GENERATED BY THE PROPOSED SYSTEM (TASK 5)	93

VI. CONSULTATIVE NATIONAL WORKSHOP FOR ASSESSING THE PROPOSED METEOROLOGICAL SYSTEM AND SUBSYSTEMS (TASK 6)

B&N Workshop 106

RNAM Worshop 126

WinDigita Workshop 156

VII. ASSESS THE REQUIRED EQUIPMENT AND ASSOCIATED INVESTMENTS FOR THE INTEROPERATE PROJECT, AND DEVELOP A PHASED IMPLEMENTATION PLAN (TASK 7).

A. Assessment of the Required equipment..... 168

B. Analyze Available Suppliers of the Configurations Recommended Above 171

C. The Estimated Cost –effectiveness of the Proposed System 171

D. Implementation Schedule 173

E. Summary of Equipment Suppliers and Cost 174

F. Sensor Cost Estimate 175

G. Summary of Recommended Cost 175

H. Summary of Minimal Cost 177

I. List – Potential Suppliers of Sensors and Computing Equipment 178

Attachment A – High Performance Computing Facility
The Ohio State University Supercomputer Center Report

Attachment B – Interoperate Equipment Data Details – 136 Page Optional Supplement

LIST OF TABLES

Table No.	Description	Page
1	RNMA Storage Pools	81

INTEROPERATE Romania Project

Final Report

I. EXECUTIVE SUMMARY

The INTEROPERATE Feasibility Study Project was developed by the Romania National Meteorological Agency (RNMA) to improve the ability of the agency to collect and interpret meteorological data and to develop needed predictions and warnings for public dissemination. It was funded by a U.S. Trade and Development Agency grant of $340,100 awarded to Romania in August 2004. Burgess & Niple, Inc. (B&N) was awarded a contract to prepare the feasibility study, with assistance from subconsultants, Innovative Hydrology and The Ohio State University/Ohio Supercomputer Center of the United States, and 3CTotalConsult and WinDigita of Bucharest, Romania. The work began in June of 2005 with a meeting of the consultants and RNMA senior staff in Bucharest. The scope of the study and report includes an assessment of existing equipment and methods, an assessment of methods of coordination of new database systems with existing SIMIN and DESWAT database systems, identification of computer systems needed to perform simulations and manage database systems, identification of training needs, and identification of environmental and developmental effects of implementing INTEROPERATE. The report addresses these requirements.

The project also includes the purchase and installation of three sets of sensors to determine their suitability for use in the project. These are present weather sensors, soil moisture sensors, and a mobile automatic weather station. These have been delivered, installed and have functioned satisfactorally. A tethersond air quality monitoring system was planned as part of the pilot study, but was deleted due to excessive cost of purchase.

Flooding and related damages in Romania are severe. For 2005, effects are as follows:

<u>Flooding damage in Romania for the calendar year 2005</u>

Locations affected:	*1734*
Number of weather-related deaths	*76*
Estimated cost of damage	*EU 1.7 Bil ($1.2Bil)*
Households damaged	*93,976*
Businesses damaged	*1063*
Agricultural area damaged	*656,392 Ha*
Roadways of all types damaged or destroyed	*15,500 km*

Bridges and culverts damaged or destroyed *913*
Railway damaged or destroyed *24km*
Flood control structures damaged or destroyed *630*

The required investment for a recommended system and a minimal or starter system is estimated to be in the range of $3-4 million initial cost, and $1-1.5 million annual cost, depending on the option selected, with details as shown in the table below.

			Minimum Facility		**Recommended Facility**	
			Total Cost	***Annual Cost***	***Total Cost***	***Annual Cost***
TOTAL, All Costs	Sensors, Computer, RDBM		$2,743,445	$420,089	$3,711,557	$613,089
Amortized Cost	6-yr life at 6% interest:		$556,919		$753,446	
TOTAL Annual Cost				$977,008		$1,366,535

While it may be impossible to eliminate the harmful effects of flood and drought, the report provides many ways to reduce the level of risk and damage, and to increase agricultural production, primarily through better sensors, analytical development of critical information, and resulting public warnings and actions. Even an improvement of 0.1% in agriculture output from the better data would repay the investment in one year. But the greatest, and un quantifiable improvement would be in lives, injury, and economic damage that can be reduced or eliminated. Clearly a worthwhile investment viewed in the Romanian National perspective.

TASK I & 2

EXISTING SYSTEMS AND TECHNICAL SOLUTIONS FOR INTEGRATION

EXISTING SYSTEMS AND TECHNICAL SOLUTIONS FOR INTEGRATION (TASKS 1 AND 2)

A. Initial Meeting and Work Plan

Existing data systems were reviewed with RNMA staff in Bucharest to determine existing equipment, software, and institutional arrangements for operating the data storage and management systems for the RNMA. The initial meeting was held in May 2005, and a memorandum report describing the characteristics of the system was written and reviewed by all participants. A revised version of that report became the basis for the subsequent steps.

B. Model Usage for Existing and Future Conditions

ANM is interested in evaluating various models and model characteristics related to the field of general weather modeling, air pollution modeling, and agro-meteorology modeling. Only the weather modeling and agro-meteorology modeling will be addressed at this time.

ANM desires general improvements to forecasts, especially severe weather events, and a better response to the incidents. This would include severe weather warning and detection. ANM provided a number of models that they are interested to use operationally, but most importantly identified the need for very high resolution modeling (2-3 km) following the development trend of the two consortia in which ANM is involved. These consortia are ALADIN and the involvement in the AROME model, and COSMO in the form of the LMK model. ANM is also interested in investigating new and developing models in which are supported by a consortium.

C. Numerical Weather Modeling in Romania – Current Situation

There are three models included in the Numerical Weather Prediction effort in Romania. These models consist of the ALADIN, HRM and MM5 models. A description of these models as provided by Doina Banciu and Victor Pescaru follows.

1. ALADIN (Aire Limitée Adaptation Dynamique développement InterNaltional)

The first of the three models is ALADIN. ALADIN is a limited area model developed inside the ALADIN project (htttp://www.cnrm.meteo.fr/aladin/) initiated by Meteo-France. It was especially designed for the simulation of the meso-scale scale phenomena. Built in a very flexible manner, it is possible to be integrated over different domains in varying resolutions from tens down to 1-2 kilometers (in the case of the non-hydrostatic version). During the more than 10 years of the project existence the model was continuously improved and developed, and is likely the most popular numerical weather model operating in Europe.

Like its global counterpart Arpege (*Courtier et al.*, 1991), Aladin is a spectral, primitive equation model. ALADIN includes hydrostatic/non-hydrostatic, eulerian/semi-Lagrangian scheme options, DFI initialization and more recently 3D VAR data assimilation.

The model contains a complete physical package (*Geleyn et al.*, 1994):

- d-two stream radiation scheme (*Ritter and Geleyn, 1992*) including long- and short-wave fluxes in the atmosphere and at the surface; full cloud - radiation feedback; diagnostic derivation of cloud cover (from relative humidity and convection).

- Grid-scale precipitation scheme including simple microphysics (*Kesller, 1969, Clough and Franks, 1991*).

- Mass flux convection scheme (*Bougeault 1985*) including small scales features.

- Level-1 scheme of vertical diffusion in the atmosphere, similarity theory (*Louis, 1979*) at the surface.

- Friction due to the sub-grid orography.

- Two-layer soil model.

- Parameterization of the surface processes: *Interaction Soil Biosphere Atmosphere (ISBA, Noilhan and Planton, 1989, Giard and Bazile, 2000.*

Using different configurations, the model is used for specific tasks:

a) Forecast (direct integration - 001): hydrostatic/non-hydrostatic.
b) Post processing (927).
c) Interpolation from one grid to another (927).
d) Preprocessing of the surface fields (923).
e) Data assimilation:
   - Optimal interpolation analysis (701)
   - Variational analysis (3D VAR, 3D FGAT – 131)
f) Research:
   - Perturbation studies: linear tangent model (501)
     adjoint model (401)
   - Singular vector computation (801).

The Numerical Weather Prediction System at the National Institute of Meteorology and Hydrology in Bucharest, based on the ALADIN model, has been used operationally since 1997 (when it was implemented on a DEC ALPHA platform).

The operational applications were built following the limited computing power, with strong constraint on domain size and used configurations (for the time being only 4 configuration of the model are used: a, b, c, and d)

At present, the ALADIN model is integrated on a SUN E4500 platform (8-CPU 400GHz, 64 bytes architecture) twice per day over two different domains up to 48 forecast range.

For the time being the model is run in dynamical adaptation mode. The French global model, ARPEGE, following a special agreement with Meteo France, supplies the initial and boundary conditions. The file retrieval is done by ftp from a dedicated server (localized in Toulouse).

By using a 2TL Semi-lagrangian scheme, the model time step is set up at 450s for the integration at 10km resolution, and 900s for the 24 km resolution.

The integration time:

- For 48h integration at 10 km resolution: 40 minutes on SUN Enterprise 4500.
- For 48h integration at 24 km resolution: 22 minutes on SUN Enterprise 4500.

The operational suite includes the post processing (every 3 hours), the generation of standard output (GRIB format routed towards the visualization systems in Bucharest and to the Regional Meteorological Centers), statistical adaptation (MOS, Kalman filter) of the direct model output and verification procedures. Additional graphical products (meteograms, pseudo – satellite images, height of specific isotherms, stability indexes, etc) are automatically generated; they are available on the ALADIN website.

The ALADIN model results are used as input data for the wave models (WAM, VAGROM) and for the diffusion and transport of pollutants models (MEDIA).

2. High Resolution Model (HRM)

Characteristics

- Rotated latitude/longitude grid
- Mesh sizes between 0.25° (~ 20 km); 41 x 37 points
- Arakawa C-grid, second order centered differencing
- Hybrid vertical coordinate, 20 layers
- Split semi-implicit time stepping; Dt = 300s

- Lateral boundary formulation due to Davies
- Radiative upper boundary condition as an option
- Fourth-order horizontal diffusion, slope correction
- Adiabatic implicit non-linear normal mode initialization
- Integration up 78 hours, twice per day.

Physical Parameterizations

- d-two stream radiation scheme (*Ritter and Geleyn, 1992*) including long- and short-wave fluxes in the atmosphere and at the surface; full cloud - radiation feedback; diagnostic derivation of partial cloud cover (rel. hum. and convection).
- Grid-scale precipitation scheme including parameterized cloud microphysics (*Doms and Schättler, 1997*).
- Mass flux convection scheme (*Tiedtke, 1989*) differentiating between deep, shallow and mid-level convection.
- Level-2 scheme of vertical diffusion in the atmosphere, similarity theory (*Louis, 1979*) at the surface.
- Two-layer soil model including snow and interception storage.
- Three-layer version for soil moisture as an option.

The model results are used as input data for INPUFF pollution forecast model.

3. **MM5 Model (PSU/NCAR mesoscale model)**

Model Characteristics (present implementation)

- Non-hydrostatic version.

- Full operational implementation on a SUN Enterprise 3500 workstation (4 processors).

  - Initial and boundary conditions from GFS and the sea surface temperature from ETA model.

- Regular polar stereographic projection Δx=15 Km (103 x 79 points), 25 vertical levels; Δt=45 s.

Physical Parameterizations (present implementation)

- Cloud effects are considered, but only surface atmospheric radiation effects are taken into account.
- Moisture Physics: Simple ice (Dudhia).
- Grid-scale precipitation scheme including parameterized cloud.
- Microphysics (Doms and Schdttler, 1997).
- Convection scheme: Grell
- Vertical diffusion: TKE (Burk-Thompson, 1989).
- Surface energy budget used to calculate ground temperature.
- Horizontal diffusion of perturbation temperature.

4. ALADIN Model

Hydrostatic Version

Simulations were carried out for the same configuration used within the operational suite at 10 km resolution (100 x 100 points, 41 vertical levels, Δt=450s).

Integration time for 48 hours forecast using 8CPU: 20 minutes (in comparison with 40 minutes on SUN platform using 8 processors).

Non-Hydrostatic Version

The non-hydrostatic version is included in the ALADIN code, which is activated by a simple switch.

In order to demonstrate the functionality of the model at 2.5 km, there were carried out several simulations for the severe weather event of 28th of August 2004, when tornadic winds (waterspouts), intense electric activity, sporadic hail and exceptionally amount of precipitation (190 l/m^2 cumulated in 12 h, at Constanta -on the shore, 318 l/m^2 cumulated in 24 h at Pantelimon-in land) were registered in the southeastern part of Romania.

A preoperational suite (24-hour forecast) was fully installed on the cluster platform. Due to the computing power limitation, the predefined domain size was set up to about 500 x 500 km, considered to be large enough for the simulation of local severe weather phenomena. For the analyzed case the domain was localized on the southeastern Romania, but depending on the requirements, it can be centered to other locations or even enlarged if more computing power will be available.

Integration time for 6-hour forecast (216 x 216 points, 41 vertical levels, Δt=60s)

- on SUN platform (E4500,) 8 CPU: ~ 5h 30minutes
- on Linux cluster 8 CPU: ~ 3h 30 minutes
- on Linux cluster 20 CPU: ~ 2h 12 minutes
- on Linux cluster 28 CPU: ~ 2h 11 minutes!

5. LM Model

The LM (Local Model) developed within the COSMO project was implemented on the Linux cluster platform and simulations at 7 and 2.8 km proved its functionality. The model is to be run twice per day up to 78-hour forecast for a domain covering Romania (16 –32° E, 42 – 51°N).

Characteristics

- Rotated latitude/longitude grid.
- Generalized terrain-following vertical coordinate, 35 layers at 14 km, 50 levels at 2.8 km.
- Arakawa-C grid, second order centered differencing.

- Time Integration: Second-order leapfrog HE-VI (horizontally explicit, vertically implicit) time-split integration scheme by default. Options for:

  a. a two time-level 2-nd order Runge-Kutta split explicit scheme/
  b. a three time-level #d semi-implicit scheme.

- Numerical Smoothing: 4-th order linear Horizontal diffusion with options for a monotonic version including an orographic limiter. Rayleigh dumping in upper layers. 3-d divergence damping and off-centering in split time steps.
- Initial Conditions – interpolated initial data from various coarse-grid driving models (GME and LM in present configuration) or from the continuous LM data assimilation stream. Option for user-specified idealized initial fields.
- Lateral Boundary Conditions – 1-way nesting by Davies –type lateral boundary formulation. Option for periodic boundary conditions.
- Top Boundary Conditions: Options for rigid lid condition and Rayleigh dumping layer.
- Initialization; Digital filter initialization of unbalanced initial states with options for adiabatic and diabatic initialization.

Physical Parameterization

- Sub-Grid-Scale Turbulence: Prognostic TKE closure at level 2.5 including effects from sub-grid scale condensation and from thermal circulations.
- Surface Layer Parameterization: Surface layer scheme based on TKE including laminar turbulent roughness layer.
- Grid-Scale Cloud and Precipitation: Cloud-water condensation and evaporation by saturation adjustment. Precipitation formation by a bulk microphysics parameterization including vapor, cloud water, rain and snow with column equilibrium for the precipitating phases. Option for a new bulk scheme including cloud ice. Option for a 3-d precipitation transport.

- Sub-Grid-Scale Clouds: Sub-grid scale cloudiness is interpreted by an empirical function depending on relative humidity and height. Corresponding cloud water content is also interpreted.
- Moist Convection: *Tiedtke (1989)* mass-flux convection scheme with equilibrium closure based on moisture convergence. Option for the *Kain-Fritsch* 91992) convection scheme with non-equilibrium CAPE-type closure.
- Radiation: δ-two stream radiation scheme (*Ritter and Geleyn, 1992*).
- Soil Model: Two layer soil model after (*Jacobsen and Heise, 1992*) employing the extended force-restore method; snow and interception storage are included. Option for a new multi-layer version of the model based on the direct numerical solution of the heat conduction equation.
- Terrain and Surface Data: All external parameters of the model are available at various resolutions for a predefined region covering Europe.

Code and Parallelization

- Modular code structure using standard Fortran-90 constructs.
- Parallelization done by horizontal domain decomposition.
- *Message Passing Interface* (MPI) is used for message passing on distributed memory machines.

D. Future Plans for Numerical Weather Prediction

Like for almost National Meteorological Services, the main goal of ANM is the general improvement of the forecasts, especially for severe weather events. Improved forecasts will provide a more accurate characterization of weather events (both in lead time, and magnitude).

The models expected to be integrated operationally are very high resolution models (2-3 km) following the development trend of the two consortia in which ANM is involved, ALADIN (AROME model) and COSMO (LMK model). The Weather Research and Forecast (WRF) model will also be described.

1. AROME Model

AROME is project driven by Meteo France in order to prepare a system meant to become operational at 2.5 - 3 km resolution. (AROME - **A**pplication of **R**esearch to **O**perations at **Me**soscale) joint by ALADIN consortium within the ALADIN-2 project (AROME Limited Area Decentralised International Network). The concept of AROME model (non-hydrostatic, convection-resolving model) is similar to MM5, WRF, and LM. Its main mission is to improve forecasts of short-range mesoscale events (such as convection), QPF and low-level weather forecasts.

The dynamic core of the AROME model is ALADIN non-hydrostatic (a robust one at rather low costs, but with very good quality of simulation) and the physics is derived from Meso-NH system (www.aero.obs-mip.fr/mesonh/). Data assimilation is similar to ALADIN-3DVar, with much more mesoscale data (low-level, satellite, radar).

AROME Numerics

- Spectral LAM with linear collocation grid and rectangular truncation i.e., no spectral aliasing.
- Semi-Lagrangian advection.
- Dynamics derived from Laprise's system: terrain-following mass vertical coordinate, compressible non-hydrostatic equations.
- Discrete 2nd-order accurate, preserving energy and angular momentum.
- NH dyn variables: vertical divergence, NH mass departure.
- SI time-step, iteration of nonlinear terms, spectral solver.

AROME Physics

- Microphysics: ICE3: 6 species of water (vapor, cloud liquid, rain, cloud ice, graupel, and snow).

- Turbulence: 1D version of the MesoNH scheme (prognostic TK, Bougeault-Lacarrère mixing length closure).

- Radiation: from ECMWF (SW = Fouquart-Morcrette, LW = RRTM), 6 visible spectral bands, over 140 IR bands, ozone and aerosols.

- Surface: external software (towns, vegetation, sea, lakes, snow) with pluggable slow- and fast-hydrology, prognostic marine mixed layer.

AROME Costs

- The un-un-optimized grid-point cost is 3 times ALADIN, probably 2 times after optimization.

- The increase in grid size means a factor dx.dy.dt = 4 x 4 x 7 i.e. AROME is about 300 times more expensive than 10-km for the same lead time and domain.

The AROME model will be implemented at ANM. Simulations on the case of August 28, 2004 (the same case used for NH-ALADIN simulation) have been carried out at Meteo-France. The results of these experiments emphasized the importance of meso-scale data assimilation.

2. Weather Research Model (WRF)

The United States is currently engaged in a new model called the Weather Research and Forecast (WRF) model. Development led by the National Center of Atmospheric Research (NCAR), National Oceanographic and Atmospheric Administration (NOAA) Forecast Systems Lab (FSL), and NOAA/National Center for Environmental Prediction (NCEP). There are additional partnerships with AFWA, Federal Aviation Administration (FAA), and National Research Laboratory (NRL).

There are two efforts that are closely coupled. The first effort is the Advanced Research WRF (ARW), which is undergoing development within the academia and amongst weather research entities. The second effort is named the Non-hydrostatic

Mesoscale Model (NMM), which is developed to be run operationally at the National Center of Environmental Prediction (NCEP) in the United States. WRF represents the latest in regional modeling with grid points down to just a few km in horizontal distance.

WRF model characteristics include the following:

- Includes research and operational models.
- Highly modular, single source code with plug-compatible modules.
- State-of-the-art, transportable, and efficient in a massively parallel computing environment.
- Design priority for high-resolution (non-hydrostatic) applications.
- Integrates full compressible non-hydrostatic equations on a mass-based terrain-following coordinate.
- Can be run either for idealized or real-data cases.
- Options for on and two-way interactive nests.
- Contains a prototype moving nest.

3. PROS and CONS

WRF has much finer horizontal resolution than the MM5. WRF effective resolution is:

$$\sim 7*\Delta x,$$

while MM5 effective resolution is

$$\sim 10*\Delta x.$$

WRF ice microphysics is improved over MM5.

WRF-NMM is a large subset of WRF where they dynamical core is developed by NOAA/NWS/NCEP/ WRF-NMM is a freely available community model. The product is well supported by several online user forums and regular tutorial classes.

WRF-NMM has been tested on the following platforms:

Vendor	Hardware	O.S.	Compiler
IBM	SP Power-*x*	AIX	vendor
SGI	MIPS	IRIX	vendor
HP/COMPAQ/DEC	Alpha	Tru64	vendor
Various	IA-32	LINUX	PGI
Various	Opteron	LINUX	PGI

The Weather Research and Forecasting (WRF) model is a next generation mesoscale numerical weather prediction system designed to serve both operational forecasting and atmospheric research needs. The effort to develop WRF has been a collaborative partnership, principally among the National Center for Atmospheric Research (NCAR), the National Oceanic and Atmospheric Administration (NOAA) – National Centers for Environmental Prediction (NCEP) – Forecast Systems Laboratory (FSL), the Air Force Weather Agency (AFWA), the Naval Research Laboratory, and the Federal Aviation Administration (FAA).

There are two main varieties of the WRF model, differing in that one is entirely operational and the other is used generally for research application. The NCAR WRF-ARW (Advanced Research WRF) is the research version of the WRF, which has a slightly more complex dynamical core. The NCEP WRF-NMM (non-hydrostatic Mesoscale Model) is the operational version of the WRF model. A significant difference in the WRF-ARW and the WRF-NMM is the initialization and the dynamical core. Physics and software framework are shared between the WRF-ARW and the WRF-NMM. The characteristics of the WRF model are as follows:

<u>WRF-ARW</u>

- Terrain-following hydrostatic pressure vertical coordinate.
- Arakawa C-Grid.
- 2nd or 3rd order Runge-Kutta split-explicit time differencing.

- 2nd to 6th order horizontal and vertical advection schemes.
- Conserves mass, momentum, dry entropy, and scalar using flux form prognostic equations.

WRF-NMM

- Terrain-following hybrid (sigma-pressure) vertical coordinate.
- Arakawa E-grid.
- Explicit time differencing.
- Conserves mass, kinetic energy, enstrophy, and momentum, as well as a number of additional first order and quadratic quantities using 2nd order finite differencing.

In general both versions of the WRF model are:

- Highly modular, single source code with plug-compatible modules.
- State-of-the-art, transportable, and efficient in a massively parallel computing environment.
- Non-hydrostatic with a hydrostatic option implemented at run time.

The popularity of the WRF model is growing throughout the world. WRF forecasts are being made in Europe by the Institute of Atmospheric Sciences (ISAC) of the Italian National Research Council (CNR), and by the National Observatory of Athens. The National Observatory of Athens is providing forecast of Europe, while CNR is providing forecasts for Italy.

The WRF-NMM model is a freely available community model. WRF supported platforms are shown in the table below.

Vendor	Hardware	OS	Compiler
Apple (*)	G4/G5	MacOS	IBM
Cray Inc.	X1, X1e	UNICOS	Cray
	Opteron	Linux	PGI
HP/Compaq	Alpha	Tru64	Compaq
	Itanium-2	Linux	Intel
		HPUX	HP
IBM	Power-3/4/5; BG/L (**)	AIX	IBM
SGI	Itanium-2	Linux	Intel
	MIPS	IRIX	SGI
Sun (*)	UltraSPARC	Solaris	Sun
various	Xeon and Athlon	Linux	PGI, Intel, Pathscale
	Itanium-2 and Opteron		

(*) dm-parallel not supported yet; (**) Experimental, not released

It is recommended that RNMA continue to their participation within both the ALADIN and COSMO consortiums. RNMA has a great deal to gain from community models. RNMA is on course to adapt the AROME model for their use, and this should be further encouraged and continued.

It is also recommended that WRF be also incorporated into operations, likely at the expense of further MM5 development. The WRF community offers a great deal of support internationally. As is always the case in the United States, the meteorological modelers embrace the needs of modelers from other countries, especially those from national agencies. Quite often there is assistance offered for travel and subsistence for international scientists. It is suggested that benchmark tests be made with WRF to fully understand the processing requirements within the RNMA environment.

E. Agricultural Models

The RNMA has identified a need to improve agricultural models in order to maximize domestic crop yields. In particular, RNMA would like a model to simulate soil moisture for growing winter wheat and maize. RNMA has requested information regarding agricultural Decision Support System (DSS) to help support and maximize the effectiveness of crop selection and production in Romania.

DSS are used in agriculture for tactical, strategic, and policy level decision support. In essence data is collected, analyzed, and linked with appropriate decision rules that identify actions to assist in producer decision making. DSS rules are not developed to make a single recommendation but rather to provide decision makers with choices. DSS should be seen as a source of valuable tactical information. In the case of the RNMA there is a great desire to provide a tool to help producers to plan ahead and limit the losses associated with extreme weather events, especially drought. A well structured DSS will also be able to integrate science, economics, resource use, and environmental impact. For instance, with regard to economics, a given crop may provide greater yields but a low market price may in essence negate the greater yields, where a crop with lower yields but a much greater market price would be suggested.

Decision support has been available to agricultural producers for decades, though the use of DSS in agriculture is declining. The barriers to the wholesale adoption of agricultural DSS generally consist of a lack of connection between the scientist and the producer. The agricultural DSS often originate within the academia. This often has led to the development of a DSS that is too difficult to use while providing only limited information. An ineffective DSS is generally attributed to a poor understanding among researchers of how agricultural DSS are used by producers. This can be mitigated by designing a DSS in conjunction with targeted users. This way the DSS is most likely to have a positive impact on addressing agricultural decision processes.

An ideal DSS integrates the expert knowledge, management models, and timely data to assist producers with daily operational and long-range strategic decisions. The ultimate challenge is to produce a product that can be synthesized easily and quickly by the producers, without this the DSS system will likely be largely ignored by the producer.

With these concepts in mind, agricultural DSS supporting producers in Romania should be tightly coupled to climate modeling. Dialogue should be encouraged between the researchers building the application and the agricultural producers so that DSS function will result in something useful for the producer.

Up to now, RNMA has used a series of agricultural models which serves two purposes; the first is to characterize soil water conditions and the other is to plan and manage irrigation. The model effort is the basis of a DSS. These models are described below.

1. **Operational Models**: Soil Water Balance (SWB) and CROPWAT

- **SWB** is a very simple soil water balance model made in Excel spreadsheet for estimating soil moisture content at different depths levels (0-20 cm, 0-50 cm and 0-100 cm) for two crops: winter wheat and maize. T he model is run every week and requires as input the following data: the amount of rainfall and reference crop evapotranspiration for the previous week, crop coefficients and the initial soil water content at the beginning of the analyzed period. Model output: the available soil moisture (mc/ha), soil moisture deficit or excess and % of available soil water capacity. Depending of these percents a classification by humidity limit classes is made (extremely drought, strongly drought, moderate drought, and satisfactory supply, excess).

- **CROPWAT** is a software application for irrigation planning and management, developed by the Land and Water Development Division of FAO and is used operationally only for calculation crop reference evapotranspiration (ETo), that is input into the SWB model. CROPWAT uses the FAO (1992) *Penman-Monteith* method for calculating the reference crop evapotranspiration. The program uses a flexible menu system and file handling, and extensive use of graphics. As climatic input data, CROPWAT requires decadal or monthly means values of minimum and maximum air temperature, relative humidity, sunshine duration and wind speed. This estimation together with decadal/monthly rainfall, crop and soil data is used in daily crop water requirement, irrigation requirements and soil moisture balance simulations, and also in the assessment of production under rain-fed conditions or deficit irrigation.

2. **Research Models:** CROPWAT, CERES-Wheat, CERES-Maize, AFRCWheat

CERES-Wheat and CERES-Maize are included in a Decision Support System for Agrotechnology Transfer (DSSAT). These models simulate crop growth, development

and yield formation, and are used for research purposes such as: climate variability/ change impact assessment on agricultural crops, application of medium and long-range weather forecasts in combination with agro-meteorological models to estimate and forecast soil moisture deficit and crop yield, etc. Generally, these dynamic models requires as input: daily climatic data (minimum and maximum air temperature, relative air humidity, rainfall, net radiation or sunshine duration and wind speed), crop and soil data.

3. Soil Moisture Models

MDA Federal, formerly Earth Satellite Corporation, has been calculating soil moisture values for agricultural areas around the world since 1970. The CropCast crop model runs on a daily basis. The model combines the physiological modeling and statistical modeling to provide crop forecasting system. The model is designed to run at various resolutions ranging from 1 km to 48 km. CropCast currently has three main subsystems, and environmental diagnostic model, a soil moisture budget and a yield forecasting system. The CropCast model has been operational for over 20 years in Europe. It is currently run for maize and wheat in Romania. The model has shown to have yield forecast accuracies of 5-8% two months before harvest.

The model provides soil moisture conditions for both topsoil and subsoil moisture. The yield subsystem provides maximum potential crop yield, crop yield loss to date and expected end-of-year yield. The yield loss subsystem contains features that allow for integration of remote sensing data for extreme events. Because of costs of the data, remote sensing is only used in targeted areas to ascertain extreme risks when they are available. The entire CropCast modeling system is designed for seamless use in a GIS. All output files can be provided in shape files. Examples of output are rainfall, evapotranspiration, soil moisture, and crop condition and yield loss.

The CropCast environmental model subsystem contains a feature that allows for integration of various weather sources, as well as radar and satellite data if available.

MDA is willing to offer their existing model for use and subsequent modification by RNMA. In this scenario, RNMA would run CropCast at their convenience and modify model output to meet the precise needs of the agro-meteorological function. MDA has tied this information into a DSS application which can be viewed at:

http://www.earthsat.com/misc/frdss/index_mapping.html

MDA represents one of only a few agricultural modeling solutions that are commercially supported. Most of the modeling and DSS solutions are developed and maintained within the academia within Universities specializing in agriculture. The main issue with the MDA solution is that it has been developed to run over a vast area, and to meet the needs of the agricultural and agro-political interest groups in mind. Quite often when an application is built to meet the needs of many, the special needs of any one entity are not specifically well addressed.

It is clear that any off-the-shelf agro-meteorological model or DSS would need to be modified gain the most effective solution for RNMA and the agricultural producers in Romania. It is strongly recommended that the needs of the producer be clearly understood prior to investing in a solution. An interview process between the researcher and the producer would help define the basis of the expectations of agricultural modeling, and specifically the rules to be defined within a DSS. In other words, the approach suggested for RNMA would be to build an agricultural decision support function that will specifically address issues important to the producers in Romania.

MDA provides an acceptable system to start with that generally meets the requirements set forth in ISS-AGRO. Modifications to CropCast to take advantage of the RNMA monitoring network will certainly enhance the effectiveness of the model. Of course an accurate prediction of long range climate conditions will enhance the usefulness of the information for producers that are trying to decide which crops to grow, and when to plant crops. More research and a research plan should be engaged to ascertain gains from long range climate forecasting, especially related to water conditions.

F. Database Management

The Romanian subconsultant for database and data management, WinDigita, coordinated with RNMA over a period of many months in 2005 and 2006 to assess the data being generated by RNMA operations, and the current methods of data storage and processing (TOR Task 1), and the expectations of RNMA for the future course of the agency.

This Feasibility Study, and the resulting INTEROPERATE project, are intended to form a core element of Romania's National Crisis Management System, and to select a database system that fully supports this intent. The information on existing meteorological data management gathered as described above will be used to develop designs that will integrate with and extend the existing SIMIN infrastructure and data transfer facility (TOR Task 2), and will provide the RNMA with an optimal data storage facility capable of integrating data from SIMIN, DESWAT and WATMAN into a unified database system (Task 3B of the TOR).

The information developed in cooperation with RNMA has been integrated into the report "Interoperate Project Feasibility Study of Relational Database Management Systems for the Romanian National Meteorological Administration." That report begins on the following page.

The report provides the technical performance required in the preceding sections, and identifies specific equipment meeting RNMA's needs. Equipment from other manufacturers meeting these identified needs may be equally acceptable to RNMA.

Feasibility Study of Relational Database Management Systems for Romanian National Meteorological Administration

Burgess & Niple, Inc. and WinDigita

INTEROPERATE PROJECT

SUMMARY

I. Introduction 24
II. Description and inventory of the existing system 24
III.A. Objectives of the existing systems 24
III.B. Overall architecture of the existing system 25
III.C. Inventory of the existing system 31
III.C.1. Types of Data 31
III.C.2. Hardware and Software Inventory 33
III.C.3. HR Inventory 34
III.D. Existing data exchange channels and protocols 34
III.D.1. Internal Data Flows 34
III.D.2. External Data Flows 36
III. RDBMS requirements and needs 39
IV.A. Architectural and functional requirements 39
IV.B. HR Requirements 42
IV.C. Development/Programmatic requirements 42
IV.D. Administrative/Operational requirements 43
IV.E. Integration requirements with currently developing projects 45
IV.F. Licensing and Pricing considerations 49
IV.G. Cross-Platform considerations 55
IV. Proposed system and future recommendations 57
V.A. Proposed System Architecture 58
V.B. Envisioning of the new data exchange mechanisms 59
V.C. Hardware needs 62
V.D. Software needs 64
V.E. New HR allocation 66
V. Conclusions 66
ANNEX A – Minimal and Recommended Hardware configurations 68
Minimal Configuration 68
Recommended configuration 72

I. Introduction

RNMA have done a lot in terms of database services strategy, during past projects. Main idea around database storage in this *momentum* is to strengthen the HQ capabilities in terms of *operational data storage services*. There is a need of establishing a common format, a *schema*, to which every data producer and/or consumer should or must adhere. Describing such a schema is determining the data about data, the so called *metadata*. Starting with this premises, we can envision, at least for HQ location, at the national level, the "*Romanian Operational Meteorological Database*" (ROMDB) as the main tool for achieving operational proficiency from perspective of essential services like data acquisition, storage, management (optimization, scalability, retrieval, security, etc.) and flow;

In this document we will cover important issues like current capabilities, current and future forecasted needs and requirements, as well as the new proposed architecture for ROMDB;

II. Description and Inventory of the Existing System

In this section we will try to compile an inventory of the existing system inside RNMA and to provide our understanding of the functional aspect of it. In this section we will try to compile an inventory of the existing system inside RNMA and to provide our understanding of the functional aspect of it.

The present situation was achieved by means of the SIMIN (*National Integrated Meteorological System)* project which addressed Romania's primary objective of modernizing and integrating the nations various resources and real-time detection capabilities, and also facilitates the exchange of data at the Local, Regional, and Global levels.

III.A. Objectives of the Existing Systems

In order to have a clear idea about the existing system we should understand the objectives and reasoning of it, at the time. So, the SIMIN system was thought to:

- Modernize and Integrate Meteorological Surveillance Sensors
    - Radar Systems (S and C band)
    - Lightning Detection Network

- Satellite – Meteosat 7 & MSG
- Automated Weather Stations
- Hydro-Met Buoy Observations
- Legacy sensor data
- WMO data.

- Enhance National and Regional (local) Forecaster's Decision Support Systems Integrated Real Time Sensor information

  - NWP Mesoscale Models - ALADIN and MM5
  - Forecasting and Nowcasting tools.

- Upgrade Communication Infrastructure
  - National / Regional – VSAT
  - SIMINcast - Broadcast (VSAT) of data to all Regional Forecast Centers
  - Surface Observation collection – GSM/SMS
  - Subscribers – Dedicated Lines and PSTN.

Improve the Dissemination of Forecasts, Warnings and Alerts to Agencies and the Public.

III.B. **Overall Architecture of the Existing System**

The SIMIN system is a distributed architecture with one national center, connected to multiple regional sites. It supports all types of users, with a suite of tools dependent on the operational need of each user. The Figure 1 illustrates the top level SIMIN architecture.

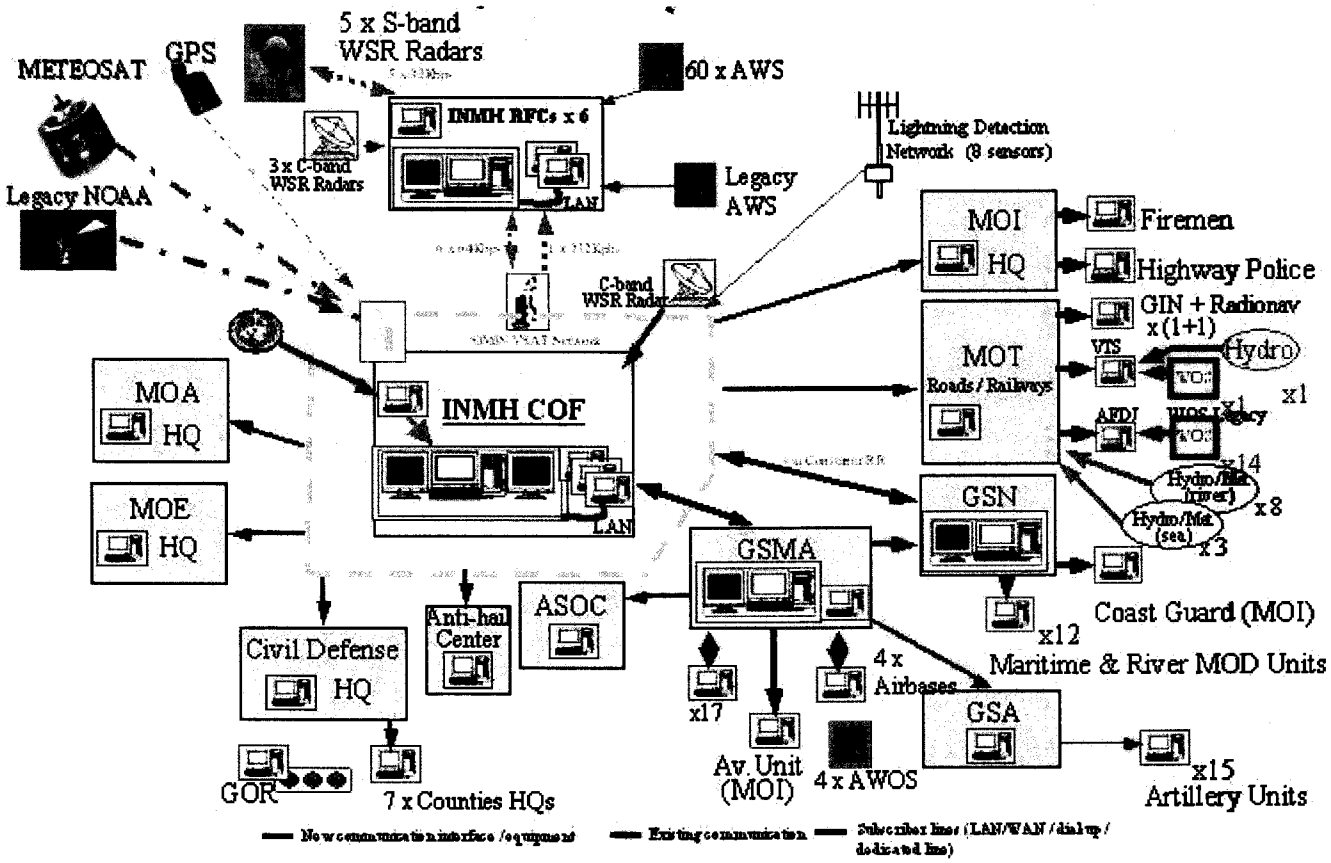

Figure 1 Top-Level SIMIN Architecture

Figure 2 is showing the primary forecasting sites (including the Central Operations Facilities – COF and Regional Forecast Centers -RFC and observation system providing the necessary data for RNMA to fulfill its tasks.

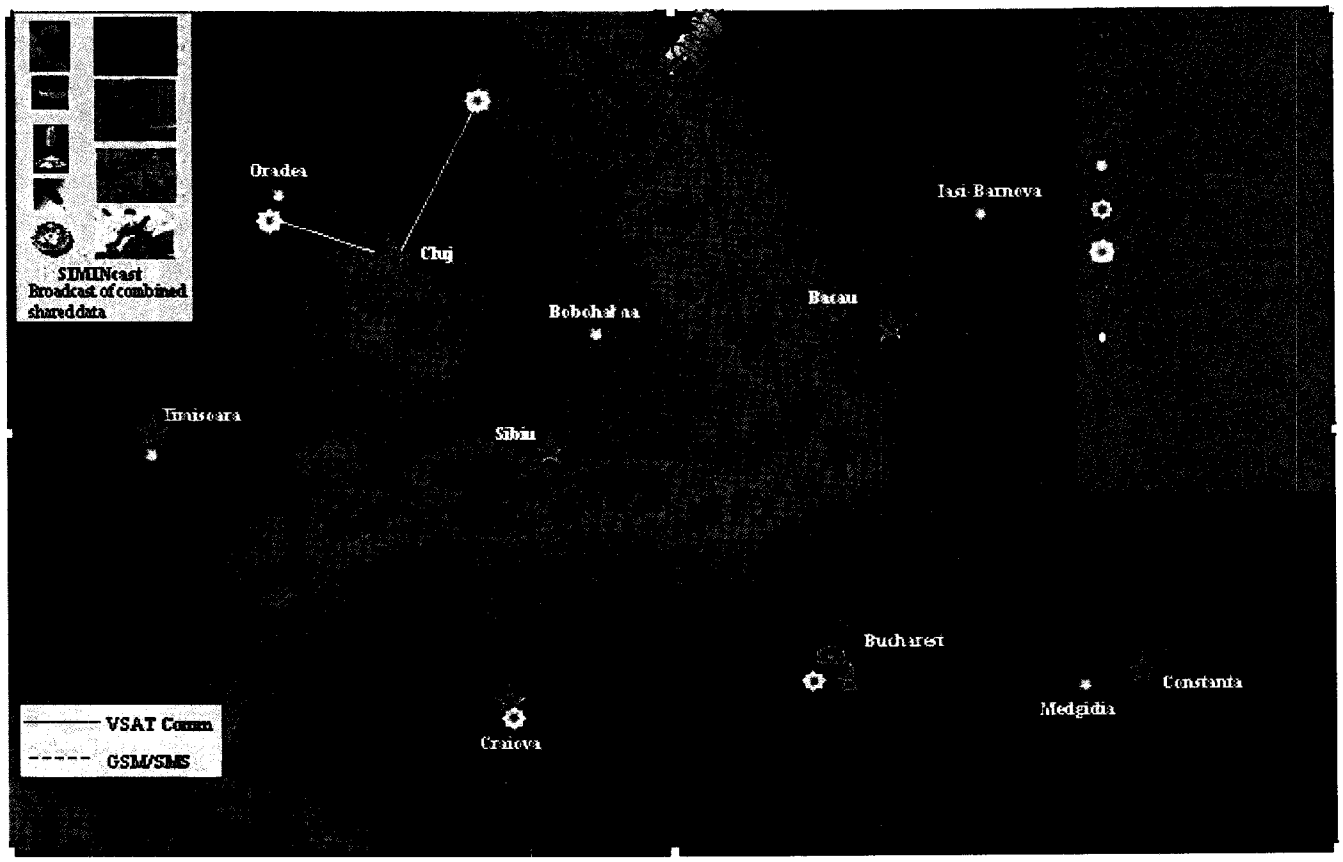

Figure 2 Primary forecasting centers and observation system

The observation system is shortly described in the following pages:

1. Surface Observation Network

From the beginning is necessary to mention that the Romanian surface observation network is a hibrid one, containing both automated and manual stations.

Surface Observation Processing (SOP) supports collection, validation, and distribution of all surface observations in the country. SOP is involving three levels of processing sites: local, regional and central.

<u>SOP Local Site</u>

When there is an automated station the Local Site SOP application (SOP-LS) retrieves raw measured data and derived data calculated in the station, for further processing, decoding, local display,

and archiving. Messages are generated from the measured parameters and supplemented with human observations, then automatically sent to the Regional Collecting Center using GSM/SMS text messaging technology. The SOP-LS supports automated stations like Vaisala MAWS 301 and 201 stations, Vaisala MILOS 500, Thies AWS 7800, and Thies DL 15. From the manual stations, messages are entered by the observer into a mobile phone, and sent as GMS/SMS text messages to the Regional Center.

SOP Regional Collection

The Regional Collection SOP application (SOP-RC) collects hydro-meteorological messages sent from all automated and manual observation stations assigned to the Regional Center. It supports manual data editing and validation of the received data and generates collective messages of multiple stations in standard formats, according to WMO regulations and national practices. All data are decoded and stored in the local database, allowing the display in alphanumeric and graphic format. Messages (grouped into a single collective product) are automatically sent to the National Center via the SIMIN Communications WAN.

There are 7 regional collecting centers (located in Sibiu, Bacau, Cluj, Timisoara, Craiova, Bucuresti, and Constanta) corresponding to the Regioan Forecasting Centers.

The regional collection center SOP application hereafter referred to as SOP-RC, was installed at the seven (7) collection centers. Six are at RNMA RFCs and one at the Muntenia Center. The regional collection center SOP receives the surface observations from the local SOP applications assigned to that center, validates the data against regional criteria, and formats the data into a single collective product according to the interface defined herein and exchanged with the IRNMS for distribution throughout the SIMIN system.

SOP National Collection

The National Collection Center SOP application (SOP-NC) supports all required capabilities of the SOP-LS and SOP-RC applications, with additional features to support national operational responsibilities. It is part of Central Operations Facility (COF) in Bucharest.

2. Radar Network

Radar network encompasses five WSR-98D S-band radars and four (4) C-band radars (2 from EEC and 2 from Gematronik. Data from the C-band radars is converted to 88D/98D formats, to facilitate integration with all applications in the system.

The following table summarizes the physical components of the radar network:

Site ID	City	County	Lat / Lon	Elev(m)	Equipment type
RDIS	Barnova	Iasi	47.167 / 27.633	102	WSR-98D S-band (2912MH
RDMD	Medgidia	Constanta	44.250 / 28.267	64	WSR-98D S-band (2965MH
RDBB	Bobohalma	Mures	46.360 / 24.225	523	WSR-98D S-band (2945MH
RDTM	Timisoara	Timis	44.311 / 23.868	85.5	WSR-98D S-band (2935MH
RDOD	Oradea	Bihor	47.033 / 21.900	136	WSR-98D S-band (2965MH
RDBU	Bucuresti	-	44. 511 / 26.079	90	Legacy C-band EEC
RDCV	Craiova	Dolj	44.311 / 23.868	192	Legacy C-band EEC
RDOR	Oradea	Bihor	47.092 / 21.943	249	Legacy C-band Gematronik
RDBM*	Baia Mare	Maramures	47.731 / 23.673	1307	Legacy C-band Gematronik

*) Operational since 2004, but still does not send data in national radar network

There are applications, on every radar site, that build radar products from raw data. The archiving of these products is done at every Regional Meteorological Center (for own radar and for 1-2 neighbor radars) and at RNMA HQ (for every radar). Exceptionally, on demand of every Regional Meteorological Center, raw data are archived too, on site. Through VPN (Virtual Private Network) subsets of radar products are transmitted at Bucharest (RNMA HQs). For more information on this please consult "Data Inventory" document, accompanying this deliverable.

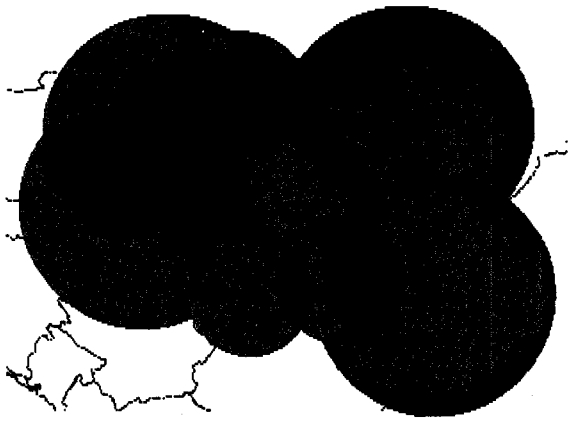

Figure 2 Radar National Coverage in Romania

The 8 operational radars contribute with data for national radar mosaic which is generated every 10 minutes at RNMA HQs. National radar mosaic is available in 3 types of products: first elevation reflectivity, echotop and maximum reflectivity on column. RNMA has allocated one server for national mosaic and integration software which uses spatial and temporal criteria for radar data selection.

In addition, Romania has the hardware and software capacity of incorporating the radar data from EEC and GEMATRONIK equipments in national radar mosaic.

3. Satellite Receiving System

RNMA is receiving in real time manner numerical data and images transmitted by geostationary meteorological satellites (MSG1 – first METEOSAT of the second generation; METEOSAT-7), NOAA/AVHRR and EPS satellites. RNMA performs primary transformations on data and stores it.

4. Lightning Detection Network (LDN)

The network is formed by eight SAFIR 3000 sensors providing national coverage at approximately 1Km accuracy, for both cloud-to-cloud and cloud-to-ground lightning. The information received from the LDN is distributed throughout the system in near real-time to support integrated forecast operations.

The network is able to efficiently detect storm cells and supply precise information about trajectories and warnings of imminent risks of storms with electrical discharges. Lightening information is integrated with radar products being the base of immediate and very short term forecasts for severe phenomena associated with profound convection (intense rains, hail, wind intensification, electrical discharges). Several researches are made in regard with phenomenal analysis of thunders, of electrical structures and mechanisms associated with connecting clouds and adaptation of network parameters to particular meteorological conditions in Romania. The methodology of electrical discharges forecast is still in development.

5. Romanian Upper-Air Network

It consists of three operational radiosonding stations located at Bucharest, Cluj-Napoca and Constanta. All the three stations are equipped with DigiCORA systems upgraded during year 2004 to Loran C for using RS-92 KL sondes and, alternatively, Vaisala GPS sondes RS-92 SGP.

III.C. Inventory of the Existing System

We will identify the existing types of data, available hardware, software and human resources in terms of the database services. Based on these inventories (coupled with initial and current objectives) of the system we will determine then the requirements for the futureproposed system.

III.C.1. Types of Data

Essentially inside an organization we can subdivide the data in two main categories:

- Unstructured data
- Structured data

There are several categories of unstructured data: Electronic Documents, Emails, Intranets and Extranets; There is no coherent policy of the management of unstructured data and is beyond this document's scope to address this issue;

In our discussions with ANM staff we were informed about **different types of structured data**:

1. **"National Surface" Observation Data (NSOD)**, collected at the Regional Centers from observation stations and stored in MS Access databases and used by the SOP applications (data is stored for the last 90 days). At the Regional Center data files are transferred to Bucharest through the Communication Gateway, stored in MS SQL Server and then stored in the Oracle "Climatological" database (~ data for 800 parameters is stored). Every month data is moved from the "operational" database to the historical one. This data is logically divided into 2 groups:

   - *Rapid flow data* – regular sensor data and some calculated data based on it. The client application is doing this calculation and there is also a Java application, which is filtering data for exporting purposes;

   - *Slow flow data* – manually entered data, additional data from observation stations l undr the responsabilty of the Regional meteorological Offices, monthly and annually reports.

2. **"Vertical Atmospheric Data Profiles"** collected from radio-sounding stations. From data catalog one may know exactly where the TEMP and PILOT files are stored on a machine owned by AEROLOGY Department.

3. **Radar** – this data is not stored in any database, there is a need to capture data from NEXRAD format, transform and store in some kind of database in order to be used.

4. **Satellite** – RNMA receive in real time manner numerical data and images transmitted by geostationary meteorological satellites (MSG1 – first METEOSAT of the second generation; METEOSAT-7), NOAA/AVHRR satellites and EPS satellites. RNMA performs primary transformations on data and store it. It's important to mention that this kind of data is not stored in any database.

5. **National Network of Electrical Discharges (SAFIR)** – International surface and upper air data is stored in a collection of files in alphanumeric format. It worth to mention that is a need of storing them in an organized database, in BUFR format.

6. **Models Output** – All the output of the models is partially stored on DVDs or CDs. RNMA personnel of every department consume time with this activity (burning the media, labeling and archiving the DVDs/CDs).

7. **GIS Data** – the existing GIS layouts are categorized on interests fields, represented on several scales (1:5000, 1:25000, 1:50000), containing diverse information (hydrological network, road network, railways network, cities, use/covering of lands/fields, hidrotechnical contructions, numerical model of lands/fields). The storage of information (e.g. shapefiles) is on CDs. The format of GIS data is ESRI specific (ArcGIS v9.1). Current licenses of RNMA for GIS package do not permit access to meteorological parameters stored in RDBMSes.

All the modeling applications used in ANM are using more or less the types of data listed above, doing data transformation operations, initial state data importing and results data exporting. These operations are done in each specific departments of ANM based on what models are using, and in some cases data is exchanged in between departments. There is also a DOS based data storage system called CLICOM which is not integrated with the Oracle database.

For a complete and detailed inventory of the data inside RNMA please consult the EXCEL file (Data inventory for Operational Meteorological Database.XLS).

III.C.2. Hardware and Software Inventory

In terms of database services RNMA owns following hardware running appropriate software:

- 1 Oracle 8i Standard Edition
- 2 Microsoft SQL Server 2000 – Standard Edition
- 14 MS Access

Hardware

- Oracle Database Server is a COMPAQ PROLIANT ML 570 Server with 2 x Intel Pentium III Xeon 900 MHz Processors, 2 MB Level 2 writeback cache per

processor, 2 x 1GB SDRAM DIMM, 5 x 36.4 GB Pluggable Ultra3 SCSI 15K rpm Universal Hard Drive, DLT 40/80 GB Tape Drive Internal Carbon.

- 2 SQL Server 2000 – 4 CPU 3.0 GHz, 1Gb RAM, 80Gb HDD.
- 14 RFC PCs – 4 CPU 2.8 GHz, 256 Mb RAM, 80 Gb HDD.

III.C.3. **HR Inventory**

In present RNMA database related staff is composed by:

- Oracle DBA to National Center.

III.D. **Existing Data Exchange Channels and Protocols**

III.D.1. **Internal Data Flows**

Existing system sends data from the surface observation stations to the Regional Center (ACCESS database) by automated GSM modem or by manual GSM phone. Data moves on to the National Climatological Database (with a SQL server and an Oracle database) which is now used for permanent storage of data.

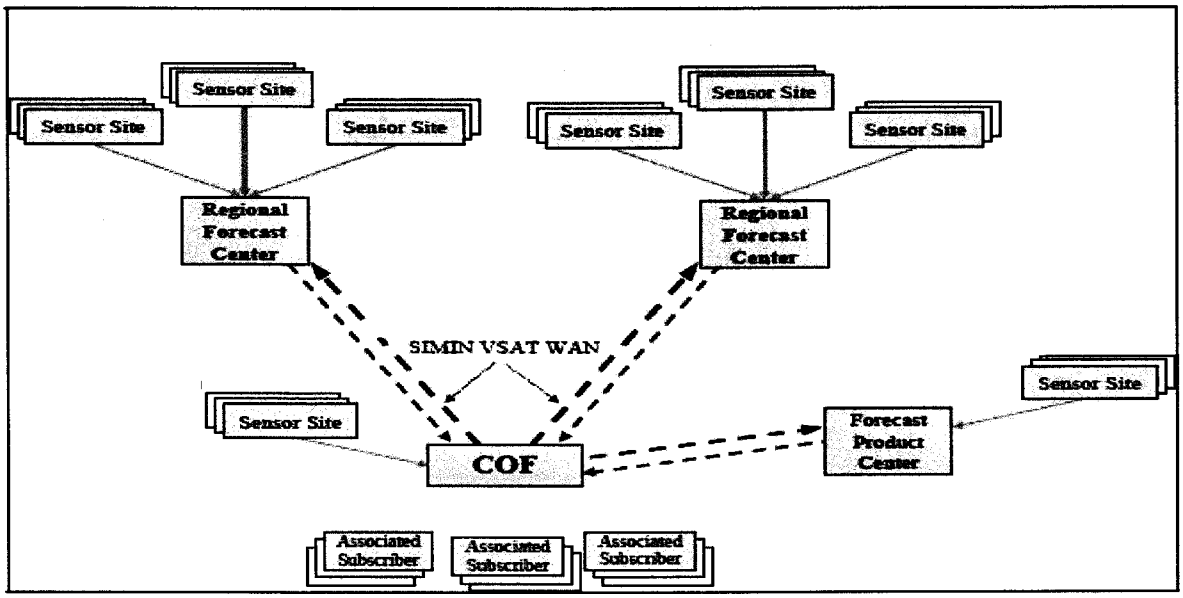

RNMA considers a new operational database essential for storing and using national and international surface, upper air, radar, satellite data, t models output etc. New models and existing models would be provided with data from this database. The sketch below indicated the relationship of the items noted above.

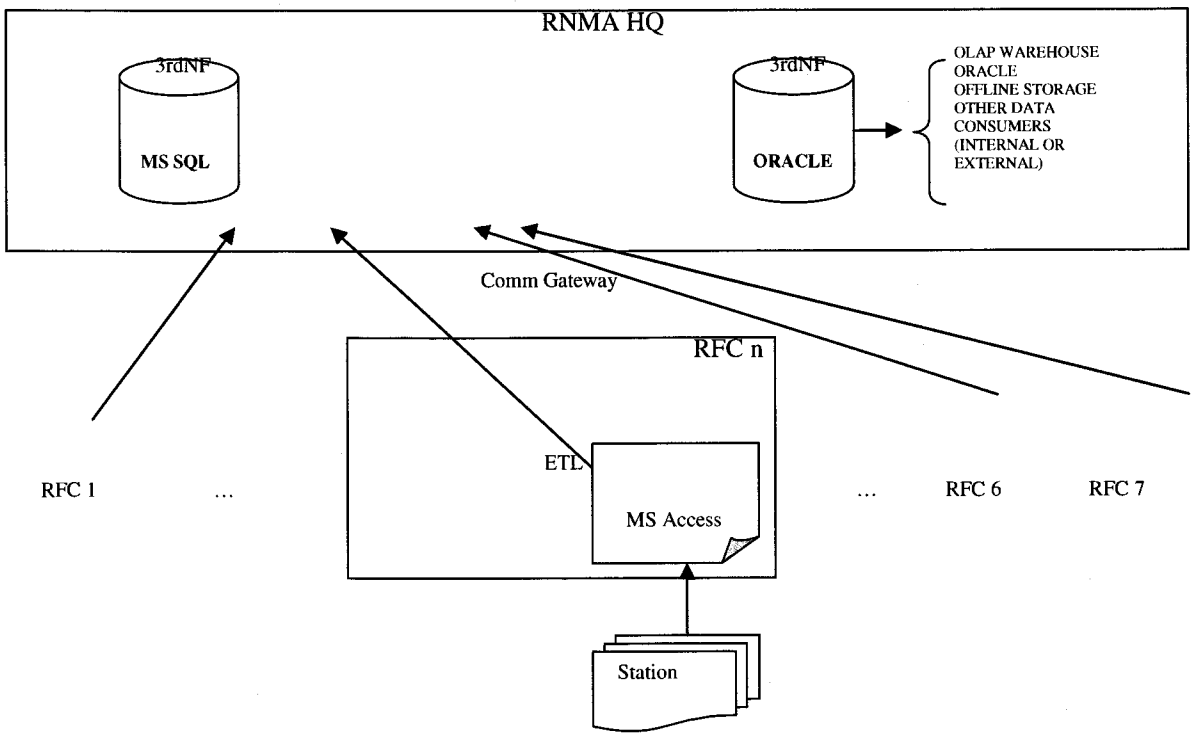

Need to integrate the (old) CLICOM /DOS with the existing Oracle database at least temporarily. CLICOM uses historical data from Oracle Database (now, the same data exist in the both systems) and there may be reasons to keep using a modified CLICOM.

A major question is how to store and use the radar data. (The data format for DESWAT is yet undetermined). Also, the use of satellite data and its storage must be considered.

INTEROPERATE needs to provide a data warehouse with hardware, software, and human capability improvements.

III.D.2. **External Data Flows**

1. As a member of WMO (World Meteorological Organization), RNMA exchanges observation and forecast data within GTS (Global Telecommunication System), in alphanumeric codes and binary standard format.

International flow of data: RNMA receive following types of meteorological message: Synop (8 /day), Temp, Metar, Amdar, Climat Synop(1/month), Climat TEMP(1/month), AFTN messages , ECMWF Gribs, LFPW Gribs, T4 Charts, BUFR data.

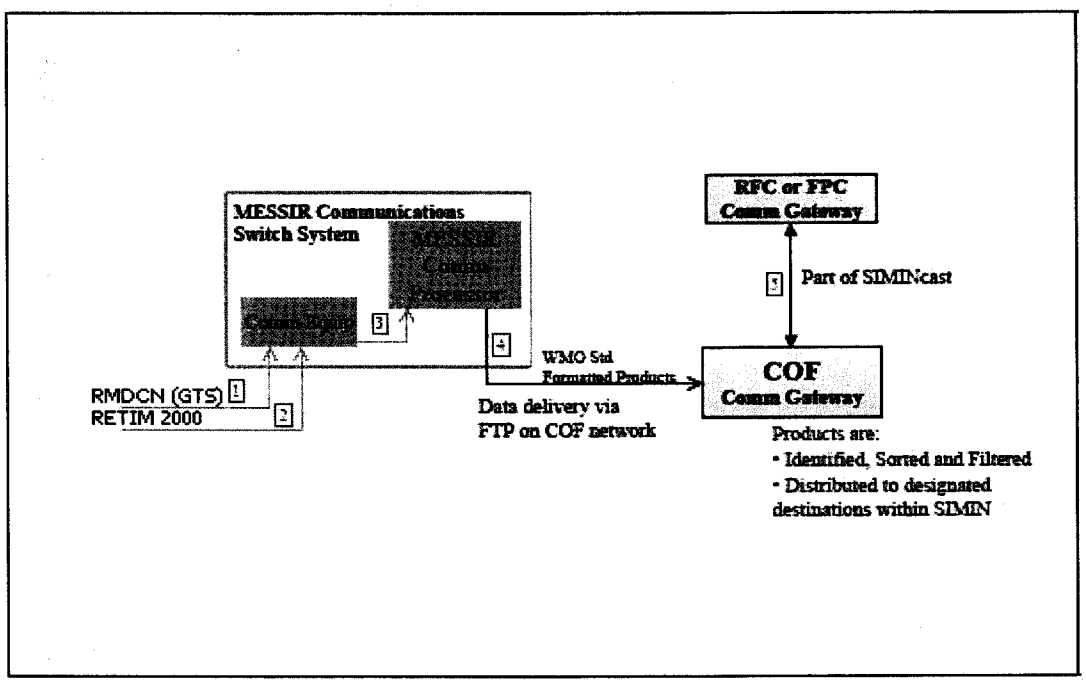

2. Data received from ECMWF through RMDCN are distribute to Comm Gateway and to other PCs3. Data received from different external organizations in order to assure initial and boundary data for limited area numerical weather prediction models integrated locally (via ftp)

- Meteo France (France): data from the global model ARPEGE , input for ALADIN model.

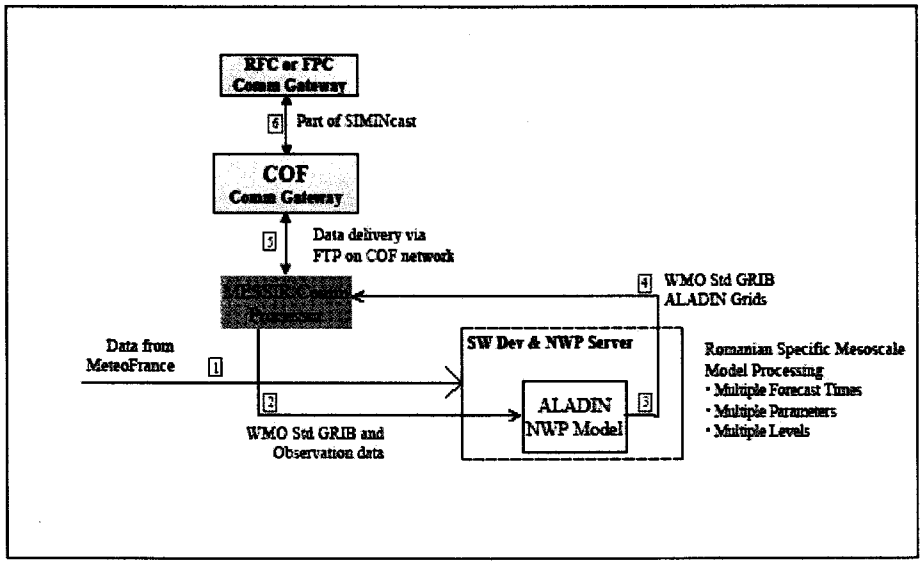

- Deutscher Wetterdienst (Germany): data from GME , input for HRM and LM models

- National Centers for Environmental Prediction (USA) : data from GFS- Global Forecasting System (, input for MM5 model and transmitted to visualization systems as well.

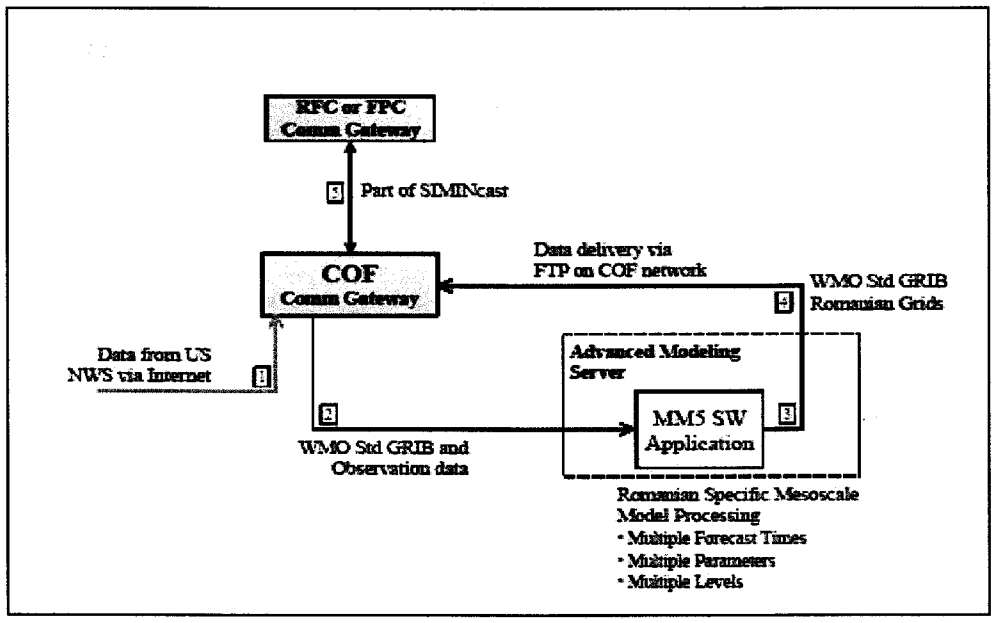

For more information see the Excel file with data inventory.

III. RDBMS Requirements and Needs

We split the requirements in different categories: architectural, human resrouces, development / programmatic, administrative / operational and integration; Based on these requirements we will determine the proposed system and future recommendations;

IV.A. Architectural and Functional Requirements

RNMA is a complex organization. It has several locations hierarchically disposed, heterogeneous IT systems (hard and software-wise) and limited staff for management (administering, auditing, monitoring, disaster recovery) of the system. The chosen RDBMS must meet following categories of architectural and functional requirements:

- ***3rd Normal Form*** – Inside available data sources we were more than surprised about that fact that the ERD (Entity Relationship Diagrams) are not at the 3rd level of normal form (3rdNF). We strongly recommend redesign and remodeling of all "databases" into at least 3rdNF flavor, to ease the migration to the new RDBMS; If it is not possible the redesign of the existing databases and applications, we strongly recommend the future RDBMS to contain 3NF ERD integrated with the old one (see "Integration") bellow.

- ***2 PC Transaction and Concurrency*** – It's very important to understand that a true database solution must adhere to the 2PC (2 phase commit) principle. 2PC is the very easy way of differentiating the files that stores data (MS Access, Excel, FoxPro, dumb text/binary files, etc.) from true databases (MS SQL Server. Oracle, IBM DB2). Basically the transactions are first „logged" into a log file and then are entirely „committed" into the storage file itself or completely "rolled back". As we know, a transaction must succeed or fail 100%, there is not middle way; If there is a fault (e.g. power outage, hard drive fault) inside (say after A3) a chain of transactions (A1, A2, …, A10) that compose a bigger transaction (A), the "logged" transactions (A1, A2, A3) must be "rolled back" and therefore the bigger transaction (A) fail entirely. The concurrency of database transactions must meet the ACID criteria: Atomicity, Consistency, Isolation and Durability; It's beyond the scope

of this document to insist more on the "transaction philosophy" in database world, but as a conclusion: only 2PC system have the chance to be considered ACID compliant;

- ***GIS Capable*** – Existing geodata should be ported to a RDBMS-based GIS system. The GIS package (ESRI) must support the chosen RDBMS. The new GIS system should permit, on one hand, operative access to the new ROMDB, and on the other hand, the migration of the existing layouts (shapefiles for ArcGIS 9.1) into the RDBMS. For this is necessary the acquiring of new licenses for the new GIS package (e.g. ArcSDE) too.

- ***Auto Manageability*** – The RDBMS should auto-tune in order to reduce the manual tuning. It's a proven fact that the DBAs do not tune the RDBMSes as good as internal auto-tune engines; Of course there will still be some manual operations, but minimal.

- ***Scalability*** – RNMA will evolve to a more and more demand regarding the needs of data storage space, speed of access to the data, ways of processing this data and so on. The proposed system will provide a way of supporting these natural increasing of demands vertically and horizontally. Vertical scalability is the ability of a system to scale by upgrading the physical machine by adding more processors, more memory and more hard disks (also named scale-in). Horizontal scalability (also named scale out) is when the system is formed by many servers (nodes) that act as one (cluster). The recommendation is to choose an RDBMS that supports both 32bit and 64bit iron; in this way we can be assured that if the situation imposes so, the database can be easily upgraded from 32bit to 64bit machines. Also we add here the need for asynchronous messaging and support for notifications based on a specific event; without these features it is hard to manage to growing of databases in a consistent manner.

- ***Agility*** – The RDBMS should support changes without disrupting the activity of RNMA. Backup and restore operations, as well as, every other operation on the databases should all happen "on line." The configuration parameters should be changed without restarting the services. Upgrades, installation of patches should impact at a minimal level the uptime of the RDBMS.

- ***Interoperability*** – Given the heterogeneous character (from IT point of view) of every research environment center, it's highly recommended that the RDBMS will interoperate

with as many as possible technologies and platforms as possible; The data exchange should happen without considerable amount of effort; This feature should be built in the cost of the RDBMS "box."

- ***Integration*** – Often confused with interoperability, integration is the ability of a system to be incorporated or "glued" with existing one without disrupting the operations inside RNMA. There are several approaches on the market based on EAI (Enterprise Application integration) or EDI (Enterprise Data Integration).

- ***Data Analysis*** – The business intelligence component it's very important for RNMA. The future RDBMS must provide a powerful engine for BI and multidimensional storage structures, plus a powerful multidimensional query language;

- ***Performance*** – The system must meet the performance needs of RNMA in terms of data access speed (transactions per minute) and cost/transaction (the total cost of the system divided to the number of transaction per minute that system can perform). At the moment the situation is like this: IBM DB2 UDB 8.2 is, by far, the most performant RDBMS under Windows OS (~3.200.000 tpmC) but MS SQL Server 2005 Standard Edition has the best price/transaction (0.99 $/transaction). There are many benchmarks: TPC-C (concurrent transactions), TPC-App (for business-to-business applications) and TPC-H (for decision support systems). The most important, in our case, is TPC-C. For a complete and up-to-date situation of this classification please visit www.tpc.org site (Transaction Processing Consortium). These classifications are very volatile; therefore we do not include them here.

- ***High Availability*** – The data layer in every multi-tier system is the most important component. Databases are mission critical IT artifacts, so they need special high availability features The planned and unplanned downtimes must be minimized, in order to keep all the operational processes up ad running inside RNMA;

- ***N-Tier Systems*** – The database is the physical representation of data layer (back-end) in an n-tier system. Other two layers are business logic layer (middleware) and presentation layer (front-end). Existing RNMA applications are exceptional from presentation layer point of view, but lack in the other two layers of the architecture;

- ***Service Oriented Architecture (SOA)*** – This is a new paradigm in the industry that states the obvious fact of the software viewed as a "service"; via services RNMA could interoperate with external entities. We also strongly support the implementation in a SOA manner for RNMA's internal department too;

IV.B. HR Requirements

RNMA must hire or outsource appropriate staff in order to keep RDBMS up and running with as many 9s as possible (99.999… %). In every location where an RDBMS exists, there should be hired a DBA (Database Administrator). We recommend that the newly hired persons pose at least one ***industry recognized official certification*** on RDBMSes available on the market (e.g. Microsoft Certified DBA – MCDBA, Oracle DBA).

The staff should attend ***periodical training*** in form of instructor-led classes, self-paced courses, books, workshops and conferences, in order to keep or improve the level of competency in regards with the running RDBMS. The amount of training time is 10-15% of the total available working time (excluding holidays and vacancies);

We encourage the organization of ***periodical internal meetings*** with every DBA on RNMA. These consultative off-line activities are good occasions of building the team, discussing the hot issues and solving the main problems that involve usually a collective and unanimous decision;

IV.C. Development/Programmatic Requirements

RDBMS must provide a very strong development platform in order to improve and innovate the ways the data is used. In today's world every RDBMS have already an ANSI-SQL compliant dialect, but we refer here to other types of programming languages, like OOP (Object Oriented Programming) languages; It's best to have incorporated inside database engine at least one runtime of a major language running ***in-process*** as opposed to out of-process ones. In-process has the advantage of speed because the communication between hosting RDBMS and hosted runtime shares the same memory address space.

Most of the times when a RDBMS is acquired the future owner does not take into account the available ***compatible development tools***. The development tools are very important in order to shorten the

time-to-market of the new RNMA "products". This is the reason why we consider the existence of development tools crucial in evaluation of which RDBMS, RNMA should decide.

The development Environment should include a RAD (***Rapid Application Development***) tool that covers all the stages of developing a solution (code editing, debugging, building and deploying);

IV.D. Administrative/Operational Requirements

To solve the integration between different data producers and data consumers is necessary to create an integrated, unified, data storage system containing all the data collected/used/produced in ANM, in order to support operational tasks inside the organization.
This **central data storage system** will be logically composed by two main components:

1. **Online transaction processing** (***OLTP***) system for day-by-day data collection/ operations.

   Transactions are those simple ACID (Atomic, Consistent, Isolated and Durable) operations that are composed, in part, by DML (Data Manipulation Language) instructions (e.g. SELECT, INSERT, UPDATES, DELETE) and, in part, by the logic of it (essentially "IF"s and "LOOP"s), that either succeed at all (COMMIT), or fail entirely (ROLLBACK); This OLTP system's principal aim is to handle very fast (seconds) and easy, as many as possible simultaneous "transactions";

   The amount of data manipulated in one request is, usually, small and received responses from the CDSS are considerable small in size.

   It is highly expectable that these systems to be very responsive. In this case we refer characteristics like time of response, maximum number of simultaneous currently running transactions and cost per transaction.

   In this kind of data store, actual data will be stored in a relational way.

   It doesn't have any sense to store old data, obsolete information in this place.

2. **Data Warehousing and Online Analytical Processing (*OLAP*)** system for historical data analyses and processing. An important clarification here is that we do not store the binary data here (BUFR, GRIB, etc.), but the extracted numerical data for time series of every parameter contained in binary files. We can imagine multidimensional data structures based on time, place and height for example.

The OLAP system's principal aim is to store and manage pre-aggregated historical data available for complex queries, like multi dimensional queries (a.k.a. cubes), in order to cover a vast majority of possible interrogations, on historical data, in a reasonable amount of time (couple of minutes) and spending a reasonable amount of space on storing media (e.g. hard-drives).

In this kind of request/response sequence, huge amount of data is queried and processed.

It is highly expectable that these systems to be able to answer most complex types of queries based on various combination of dimensions of the cubes.

This data warehouse is storing historical data in a multidimensional way.

It makes sense to move here the actual data, as it becomes "obsolete", for archiving and analyses purposes, freeing up the OLTP part of CDSS.

From here we can deduct that we need, on one hand, a way of determining what cubes we need, and, on the other hand, a mechanism to populate the cubes with old-became data, - mechanism having several names: "data transformation", "data warehousing feeding", "data integration services" etc.).

Designing a cube consists, basically, on identifying the required dimensions (e.g. time, regions, etc) and the scale of each (e.g. daily, monthly, yearly, and respectively countries, counties, towns etc.);

Establishing a data warehouse population strategy involves, among other things, - preparing brute data from several sources for import into the data warehouse, - homogenize the prepared data by making it comparable, regardless on which is the source

of the data,- and determining the schedule and channels for sending the data to the warehouse.

The **unified database (UD)** will store all the data collected from the sources mentioned above and also from other institutions. In order to store all different types of data it is necessary to be designed a general **(universal) data structure (UDS)** which will allow the warehousing of heterogeneous data types and structures.

All the data introduced in this data warehouse will be "converted" to the UDS, and available for the use of any interested "database consumers". In this way any data consumer will have the collect data for one place and in one format.

The **conversion tools** have to be developed for all different types of applications to be "plugged in" in the UD as "producers" and/or "consumers". All the plugged in components have to be listed, analyzed and the conversion tools have to be developed or acquired.

Support and upgrading policy of the RDBMS producer has a major impact in RNMA's operations and budgets. The recommendation here is to choose a producer that provides minor upgrades and service packs free of charge in a public channel (e.g. download);

Security issues are discovered all times after a software product is launched. This is the case for every RDBMS producer. Critical updates or **security patches** for the software are released as soon as possible in order to fix those security breaches. These updates are usually provided for free.

IV.E. Integration Requirements with Currently Developing Projects

We have identified following major stakeholders in environment marketplace:

- Ministries:
  - Ministry Of Environment and Water Management
  - Ministry of Agriculture, Forests and Rural Development

- NAAR – National Administration "Apele Romane" (Romanian Waters)
  - INHGA – National Institute of Hydrology and Water Management
  - NSI – National Institute of Statistics
  - Others.

It is beyond this study to identify all the projects inside these institutions but we mention only the biggest projects in Romania at the moment; There are several major projects that can impact or can be influenced by INTEROPERATE. Following projects have underway developing activities in this field:

- DESWAT
- WATMAN
- NAAR PHARE WINS

The **Destructive Waters (DESWAT)** project, which aims to minimize the socio-economic impact of extreme meteorological events and accidental pollution spills. The project will also facilitate international and regional cooperation through the exchange of hydro meteorological information. DESWAT will develop an interactive weather processing system to ingest and analyze a massive volume of data from various sources (weather station sensors, radars, satellites). The system will quickly interpret this data (running large-scale river forecast models) and generate forecast products. These forecasts will be delivered to the public and external interfaces as required by the Government of Romania. The DESWAT project will use resources and technology being acquired as part of the Romanian National Integrated Meteorological System (SIMIN project). This is a project of the Romanian National Institute of Hydrology and is being carried out by an US company. The DESWAT river flood forecasting models will feature interactive capability to produce rapid issuance and updates of river forecasts.

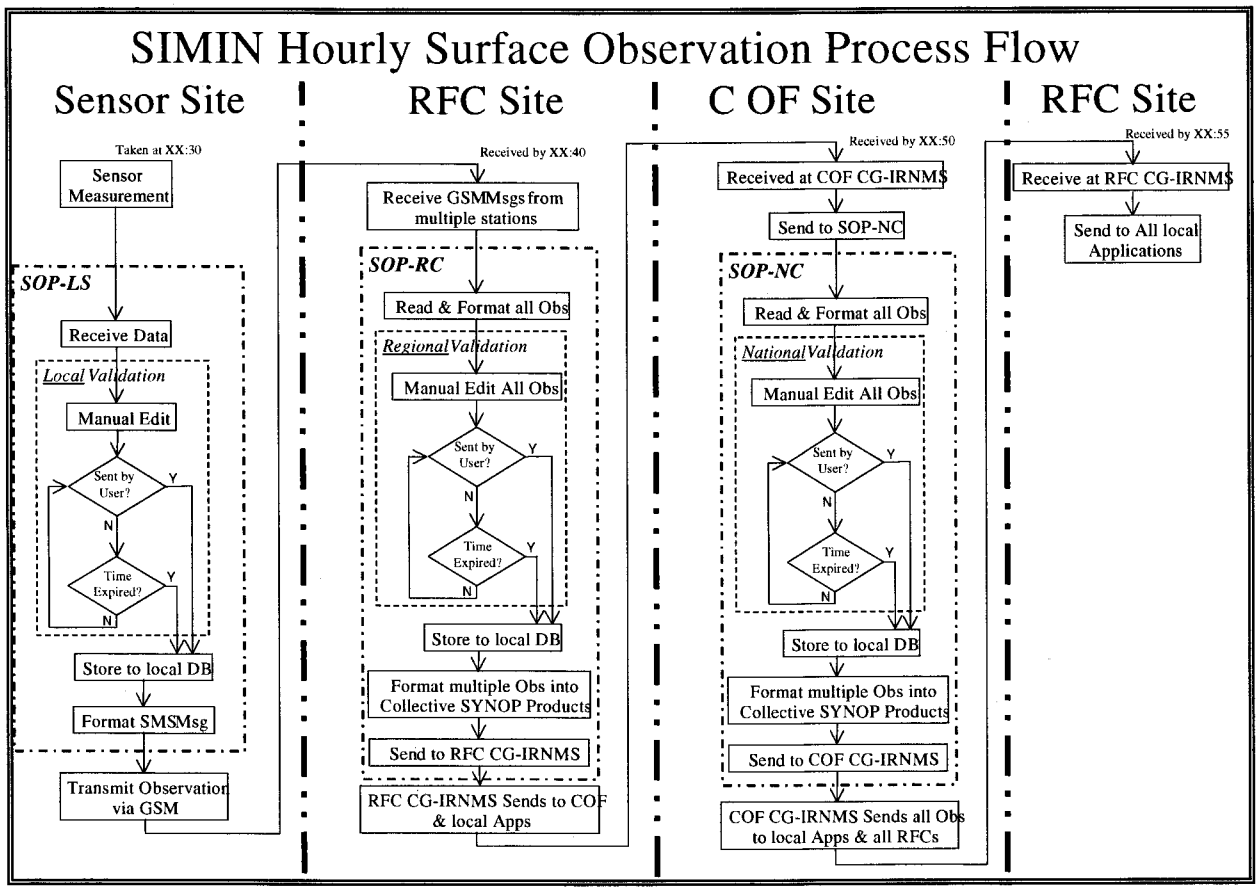

To support the Decision Support System (DSS), a package of forecasting models for the water resource system has to be added, as well as a monitoring and control system (SIMIN and DESWAT) and of the hydro-technical systems (WATMAN task). The integration of the hydrological informational system together with data from different hydro-technical systems will feed procedures (simulation, optimization, expert system, etc.) for DSS in each Romanian basin. The main task of **WATMAN (Waters Management)** is to design the architecture of the DSS and the linkage with other systems. The DSS will benefit from the meteorological forecast models (e.g., Aladin, MM5, etc.) and hydrological forecast models (e.g., NWS package of models, Toplets coupled with MM5, and other EU models), pollutant dispersion models, and optimum water supply models. All these, perhaps, will make use of our project's recommendations concerning data storage and transmission.

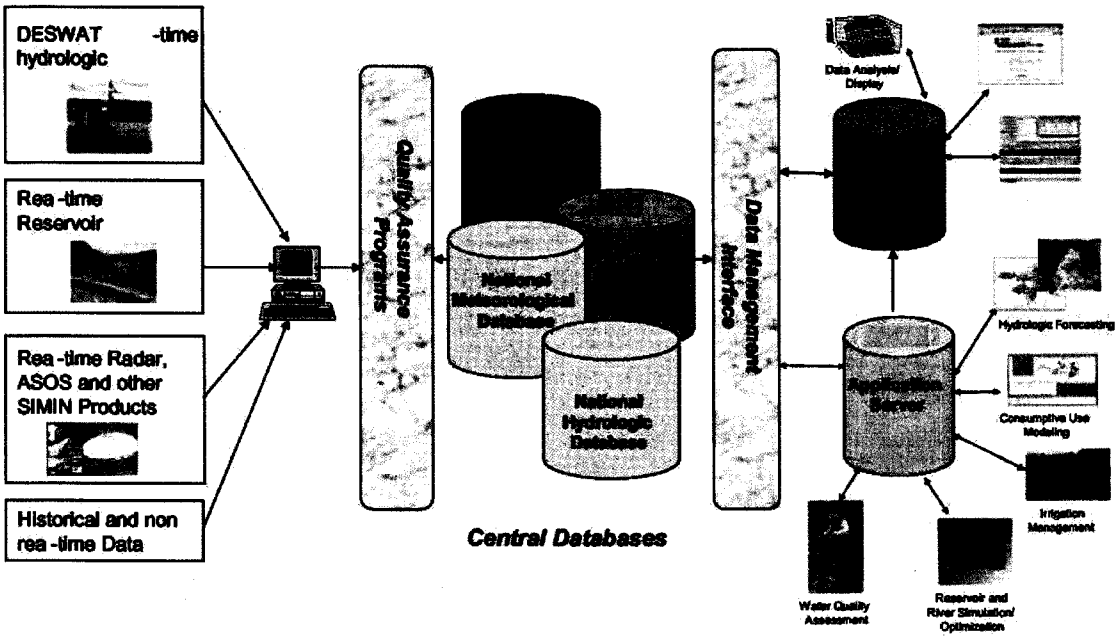

Within WATMAN, a decision support system (DSS) for integrated water management is being designed and implemented to assist in developing WFD's RBMPs and PMs, including:

- International survey of DSS for integrated water management, describing individual models and their respective applications, data requirements (including topographical and cadastral information), use of GIS platforms in data management, analysis or presentation.

- Current applications of DSS in Romania, describing the current computer-assisted applications of DSS for water management in Romania, including data requirements, software tools and outputs, and indicate whether the models are used to support real time decision making or to support research and analytical studies on water management issues.

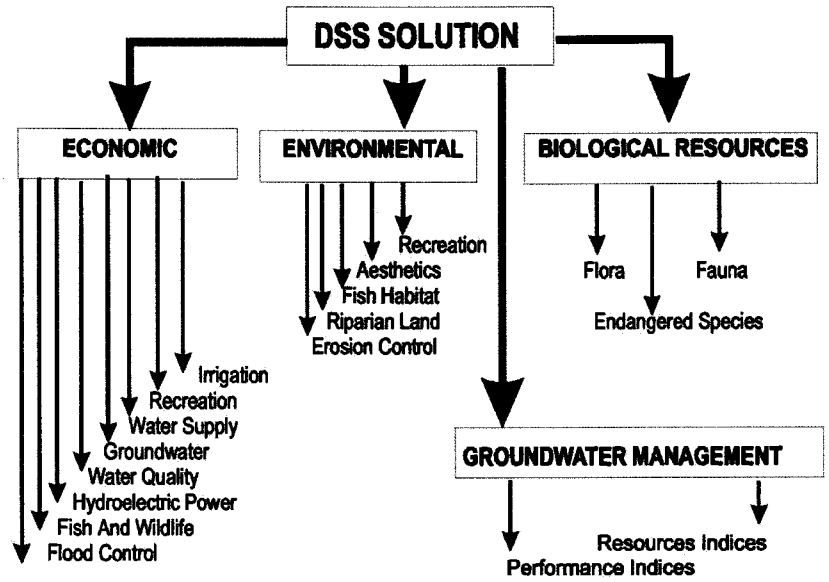

Elaboration of DSS for integrated water management in Romania developing and adapting international models and DSS to Romanian water management problems.

IV.F. Licensing and Pricing Considerations

Understanding the direct and indirect costs of deploying and managing an enterprise database solution allows RNMA to make a more informed decision when considering which database is best for their organization. Knowing all components of the licensing models and the new multicore technology and how these influence the overall cost is a crucial step in understanding database pricing.

RNMA should take into account some licensing and pricing issues:

- **Editions and Add-Ons Costs** – Depending on edition and the number of add-ons included in the box, the cost of the RDBMS increase quite much; usually there are four levels of editions (free, basic, standard and enterprise. In the following table is a comparison of the editions of the top 3 RDBMSes on the market;

Tier	Features	Sample Products	Price
Free	Limited database functionality Memory limits, database size limits, functionality limits	SQL Server Express Edition	$0
Basic	Basic database functionality Simplified Management Tools Basic security Up to 2 CPUs, memory limits	Microsoft SQL Server Workgroup Edition Oracle Standard Edition One DB2 Express Edition	$500–$5,000 per CPU
Standard	Availability Full database functionality Basic management tools Up to 4 CPUs or nodes	Microsoft SQL Server Standard Edition Oracle Standard Edition DB2 Workgroup Edition	$5,000–$15,000 per CPU
Enterprise	High availability Scalability High-end management tools Enterprise security No CPU limit	Microsoft SQL Server Enterprise Edition Oracle Enterprise Edition DB2 Enterprise Server Edition	$25,000–$40,000 per CPU

Note: All prices are per processor and reflect pricing for purchases within the United States and are in United States dollars. Pricing based on information available on vendor Web sites. For Romania, additional discounts may apply.

When it comes to add-ons, usually vendors try to charge the buyer. For RNMA we strongly recommend to choose something that includes at least OLAP, Data Mining and Management Tools add-ons. Following is a comparison table for add-ons.

	Microsoft SQL Server	Oracle	IBM
Enterprise Edition	$24,999	$40,000	$25,000
Management Tools Add-on	Included	$3,000 (Diagnostics Pack) $3,000 (Tuning Pack) $3,000 (Configuration Mgmt Pack) $3,000 (Change Mgmt Pack) Total = $12,000	$9,910 (Recovery Expert) $10,000 (Performance Expert) Total = $19,910
OLAP Server Add-on	Included	$20,000 (OLAP Option)	$28,000 (OLAP Server)
Data Mining Add-on	Included	$20,000 (Data Mining Option)	$60,000 (Intelligent Miner)
Total Cost	**$24,999**	**$92,000**	**$132,910**

Note: All prices are per processor and reflect pricing for purchases within the United States and are in United States dollars. Pricing based on information available on vendor Web sites. For Romania, additional discounts may apply;

- **Per processor vs. per core licensing** – Vendors have different approaches about a core inside a processor. Because of the technological advance, in processor industry we are in situation where inside 1 physical processor there are 2 or more cores.

  Specifically, multicore is a technological innovation that improves database performance. Intel and AMD ship processors with two or more cores starting from 2005. Multicore expands the amount of threads available to an application. As a result of this, modern enterprise usage with concurrent workloads highly benefit from the additional threads. Because leading enterprise operating systems and most applications are ready to support the multithreaded environment, multicore chips deliver performance increases of more than 50 percent. This is yet another way in which Moore's law works to benefit database customers.

  However, the enterprise database industry has widely taken the position that a core is equal to a processor, for per processor licensing models (we don't discuss here per device/per user/per seat licensing model). IBM charges per core (for their RISC line) and Oracle has adopted a policy of charging 0.75 times the number of cores in a system, rounded up to the nearest whole number (e.g. 1 dual-core proc: 0.75 x 2 cores = 1.5, rounded up to 2 for licensing purposes). Microsoft has adopted a multicore licensing policy, in which it continues to reduce enterprise software costs by licensing physical processors, not cores, for Microsoft software licensed on a per processor basis. In other words, licensing requirements for per-processor software will be determined by the number of processors, not cores.

  The following graph shows the impact of multicore pricing on enterprise database editions. SQL Server 2005 Enterprise Edition, when installed on a four-processor server, will require four processor licenses for a total cost of about $100,000

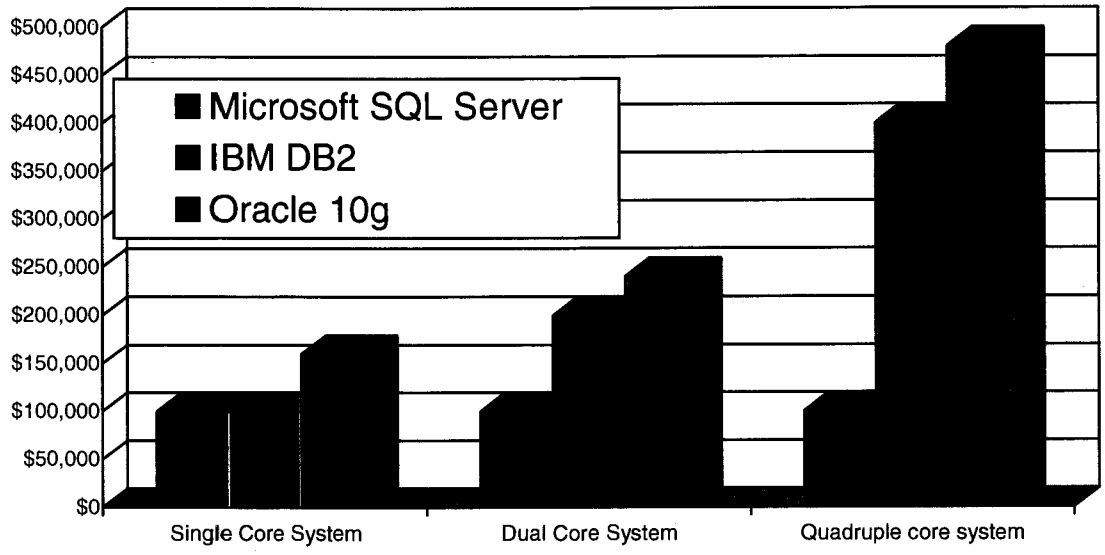

Note: All prices are for purchases within the United States and are in United States dollars. Pricing based on information available on vendor Web sites. For Romania, additional discounts may apply.

- **Maintenance costs** – Usually, the yearly maintenance costs is equal with 20-25% of the list price. Because Oracle and IBM prices are usually higher than Microsoft's, this can impact also the maintenance and support costs too.

Maintenance gives customers the right to newer versions of the software. Vendors normally offer different levels of support, ranging from business hours support all the way up to dedicated, on-site support. In contrast to Microsoft, Oracle and IBM require a maintenance agreement for the provision of service packs and security patches.

Given the longevity of databases, it's important to consider the much higher ongoing cost required to maintain an Oracle or IBM database.

Microsoft's Software Assurance gives customers automatic access to new technology and provides productivity benefits, support, tools, and training to help efficiently deploy and use software. In addition to new version rights, benefits include:

- Spread Payments
- Home Use Program (HUP)
- Employee Purchasing Program (EPP)
- TechNet Plus and TechNet Managed Newsgroups
- Problem Resolution Support (PRS)
- Extended Hotfix Support
- "Cold" Backups for Disaster Recovery

- Corporate Error Reporting (CER)
- Enterprise Source Licensing Program (ESLP)
- Windows Preinstallation Environment (WinPE)
- Microsoft E-Learning
- Training Vouchers

More information on Microsoft's Software Assurance program is available at http://www.microsoft.com/licensing/programs/sa/default.mspx.

Free support is available from Microsoft via public "Knowledge Base" – http://support.microsoft.com. As paid support, Microsoft has a service called "PREMIER Support" which can be extended not only for database, but also for entire platform (NOS, desktops, file services, directory services, messaging, application services). This is an expensive service (the price is open to negotiation and could range from 30.000 USD to 50.000 USD per 10 yearly incidents, depending on desired deliverables needed by RNMA) provided by consulting department inside Microsoft Romania subsidiary.

- **Total cost of ownership (TCO)** – After looking at the cost of database software, the next step is to bring everything together with a comparison of total cost of ownership (TCO). Independent third-party studies have determined that SQL Server offers lower TCO across multiple cost categories, with the largest savings usually coming from ongoing operations. In fact, a study by NerveWire found that SQL Server's cost advantages versus the competing product translated into a 47 percent cost savings over the three-year period covered in the survey. The results of the study are summarized as follows.

Application Type	Cost	SQL Server TCO	Competing Product TCO	Percentage Savings
Cross Organizational Applications (100+ users)	Ongoing Operations	$511,928	$926,078	45%
	Design & Development	$158,381	$181,875	13%
	Software Licensing	$75,000	$225,000	67%
	Hardware	$101,500	$221,500	54%
	Maintenance	$64,500	$145,125	56%
	Training	$12,627	$31,388	60%
	Total TCO	**$923,936**	**$1,730,966**	**47%**
Departmental Applications (50-100 users)	Ongoing Operations	$209,411	$312,886	33%
	Design & Development	$37,474	$49,274	24%
	Software Licensing	$15,000	$45,000	67%
	Hardware	$34,300	$74,300	54%
	Maintenance	$12,900	$29,025	56%
	Training	$1,681	$3,643	54%
	Total TCO	**$310,767**	**$514,128**	**40%**

IV.G. Cross-Platform Considerations

In institutions like RNMA there are several platform used, starting from different flavours of Linux, UNIX, Sun and Windows. The database product should provide the interoperability needed for such a heterogeneous environment.

In out opinion is not an important issue the cross-platform issue, meaning on what OS can the RDBMS run (except MS SQL, every RDBMS product can run under UNIX/Linux operating systems). It is more important to research the cross-platform issue, in the light of client-server connectivity. Can a UNIX client connect to a database that runs on Windows OS? Can a Windows client run on a database that runs in a Unix OS? The short answer to that is yes. Regardless the RDBMS, there are client stacks/libraries for other operating systems.

The least obvious cross-platform option is MS SQL. For MS SQL there are several free options to connect from clients under UNIX/Linux environment:

- A **TDS driver** is available as open-source from www.freetds.org; from the site we learn that "FreeTDS is a free implementation of the TDS (Tabular Data Stream) protocol that is

used by Sybase and Microsoft for their database products. It implements TDS 4.2, 5.0, 7.0 and 8.0, and can communicate with any Sybase or Microsoft SQL Server. FreeTDS comes with a low level library (the TDS layer) along with a number of APIs (Application Programming Interfaces). The APIs are DB-Lib, CT-Lib, and ODBC. A JDBC driver has also been contributed under a BSDish license and is available from the download page. It does not require the FreeTDS C libraries."

- **ODBC drivers** are available as open source downloads from http://www.iodbc.org/. Here we learn that "iODBC is the acronym for Independent Open DataBase Connectivity, an Open Source platform independent implementation of both the ODBC and X/Open specifications. It is rapidly emerging as the industry standard for developing solutions that are language, platform and database independent. What is the iODBC Value Proposition? The ability to develop applications independent of back-end database engine, operating system, and for the most part programming language. Although ODBC and iODBC are both 'C' based Application Programming Interfaces (APIs) there are numerous cross language hooks and bridges from languages such as: C++, Java, Perl, Python, TCL etc. iODBC has been ported to numerous platforms, including: Linux (x86, Itanium, Alpha, Mips, and StrongArm), Solaris (Sparc & x86), AIX, HP-UX (PA-RISC & Itanium), Digital UNIX, Dynix, Generic UNIX 5.4, FreeBSD, MacOS 9, MacOS X, DG-UX, and OpenVMS."

  ODBC is the acronym for Open DataBase Connectivity, a Microsoft Universal Data Access standard that started life as the Windows implementation of the X/Open SQL Call Level Interface specification. Since its inception in 1992 it has rapidly become the industry standard interface for developing database independent applications. Is is also the emerging standard interface for SQL based database engines replacing many of the first generation Embedded SQL and proprietary call level interfaces provided by database engine and database connectivity middleware vendors alike.

- **JDBC drivers** - Java Database Connectivity is an application program interface (API) specification for connecting programs written in Java to the data in popular databases. The application program interface lets you encode access request statements in structured query language (SQL) that are then passed to the program that manages the database.

Microsoft provides a free JDBC driver for SQL Server that runs on both Unix and Windows. Downloads are available here:

http://www.microsoft.com/downloads/details.aspx?familyid=07287B11-0502-461A-B138-2AA54BFDC03A&displaylang=en for SQL 2000 SP3

and

http://www.microsoft.com/downloads/details.aspx?familyid=e22bc83b-32ff-4474-a44a-22b6ae2c4e17&displaylang=en for SQL 2005.

- **XML queries** – SQL provide very simple way of accessing data formatted as XML (de facto standard when it comes to interoperability). Every stored procedure can be transformed in a web service and every **SELECT** query can return XML formatted data by appending "**FOR XML**" clause.

- **NET drivers** that run on UNIX are available from Mono project (www.go-mono.org). "Mono provides the necessary software to develop and run .NET client and server applications on Linux, Solaris, Mac OS X, Windows, and UNIX. Sponsored by Novell (http://www.novell.com), the Mono open source project has an active and enthusiastic contributing community and is positioned to become the leading choice for development of Linux applications."

IV. Proposed System and Future Recommendations

Given the previous evaluations Microsoft's solution it's most recommended cost-wise. IBM DB2 would integrate better with the supercomputing system but it's very expensive. Microsoft SQL Server 2005 is a robust solution that can be implemented at reasonable costs for RNMA. If the key factor is the price then MS SQL is the best option. However, if the key factor here is the level of integration and the supercomputing system is IBM-based then the best option is IBM DB2. As exchange mechanisms the most feasible solution is VPN-based. Following is a more detailed description of the future system. In term of human resources, RNMA need to invest more on training and education.

V.A. **Proposed System Architecture**

The SOA data collection system which is based on MS Access now has to be upgraded to a real 2PC (two phase commit), ACID compliant, high available, cost effective and manageable database server solution (software and hardware) and also the data replication mechanism has to be redesigned in order to be moved to the VPN network communication.

The future system will be tailored on organizational configuration of RNMA. There is a central location and 7 subsidiaries connected to collection stations; therefore the resulting hierarchical composition replication configuration of the national database system it's obvious.

At RFC site we propose an optional EAI (Enterprise Application Integration) tool like Microsoft Biztalk Server, or an ETL (Extract, Transform, Load) tool for transporting data from MS Access and other non-2PC data sources into the new databases; Microsoft SQL Server comes with several editions: Express, Workgroup, Standard, Enterprise, Developer and Mobile.

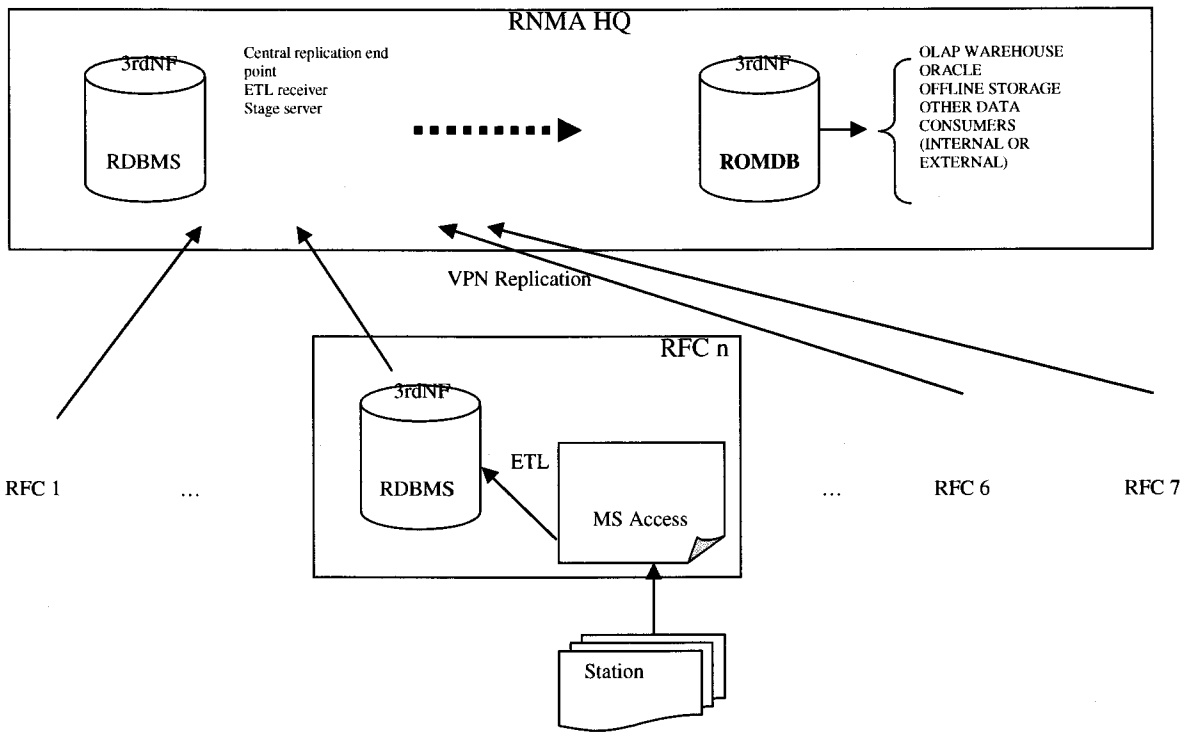

MS Access and RDBMS will integrate via ETL (Extract, Transform, Load) tools. These tools will provide the needed features for transforming data from a non-3rdNF/non-2PC environment into the new RDBMS. These two data repositories will run side by side for a period of time. The length of this timeframe depends on how quick the old applications (that consumes MS Access data) will be ported to consume the RDBMS data. In time this system will evolve into a pure 100% RDBMS oriented one. MS Access data repository will disappear being replaced entirely by chosen RDBMS.

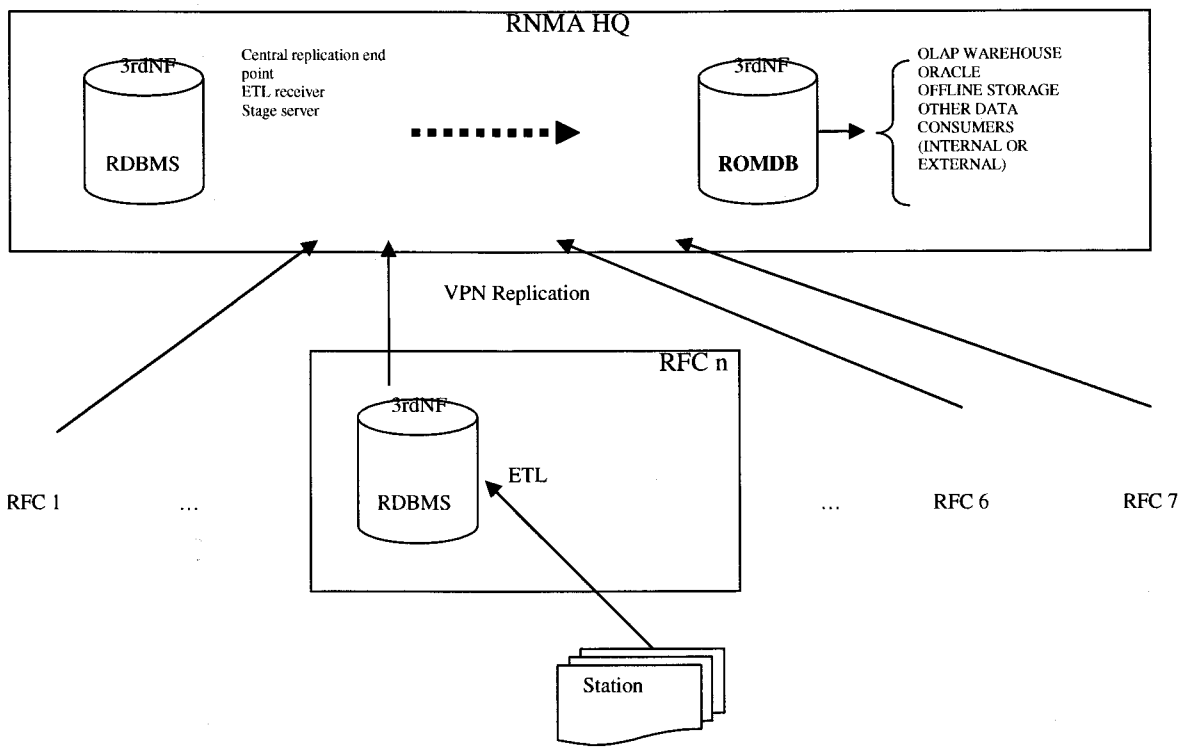

Every mission critical RDBMS server should be doubled by a hot backup. Every 2PC system has a way of keeping an online hot backup server with the help of log shipping-like technologies. The hot backups should be decided by RNMS staff based on the mission critical criteria.

V.B. Envisioning of the new data exchange mechanisms

The actual data acquisition system should be upgraded to accommodate faster and more reliable data collection from the branch offices, using the newest technology on the market and with minimum changes to the existing system.

The data exchange system has to be designed taking into account that RNMA organization has territorially distributed branches, and has to be implemented in multi-location configurations because there is a need for real time data communication.

The application should optimize data transport between different databases of the organization using customized routes and scenarios. Importance degrees could be set for certain information in order to prioritize data transmission. Other features could be data/information transmission management, communication monitoring, specific reports.

Main identified features for the new internal data exchange mechanism are:

- Data replication takes place between geographically distributed locations and a central headquarter (both ways) which allows a real time centralization and/or sharing of information with data auditing, journaling, routes configuration, storage/transportation redundancy, data synchronization between database servers, automatic system status (on/off) awareness.

- Robust data synchronization between different layers of the national system in order to provide live data feed for the modeling system.

- Multiroute data replication tool between distributed databases on a multi tier tree-like architecture (possible replication routes can look like Sensor Station -> ... -> Regional Forecasting Centre -> ... -> Centre Forecasting Centre, or subsegments of this, and back).

- The application should based on a universal data model (meta-database) in order to be able to transport any type of sensor data organized in both existing structures or from future projects.

- The replication mechanism will use configurable routes and time intervals, according to user's requirements.

- Easy interfacing with any type of data sources for import and export of information with other systems.

- Capability of rebuild of database in case of various failures (operating system software, database management system, hardware failure) using the last backup and data from linked systems.

- Intuitive interface for features management and different reports on transfer completion, problems appeared etc.

- Tool for assistance in decisions regarding equipment and communication maintenance on the basis of their performances.

Exchanging data with external entities could be easily achieved adopting SOA (Service Oriented Architecture) architecture. In this way the communication of RNMA with international organization will be based on "schema contracts" tat defines the format of exchanged files and the method of access to data.

In terms of data warehousing and data backup strategy RNMA will, most probably, adopt the OLTP-OLAP-BACKUP data flow:

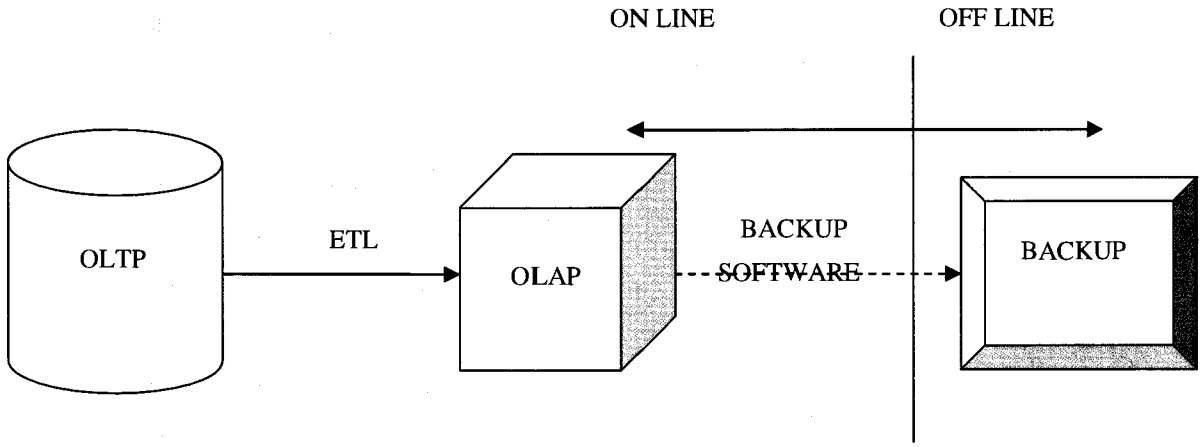

Please do not confuse the safety backup (copy or duplication of data) with high availability (back-up of service). For high availability we can recommend two backup approaches:

- "Cold" backup – stored on tapes, therefore an off line storage media; if the system fail then the restore process must be initiated; in this configuration a downtime (matter of hours) of data services must be considered (depending on how much data is going to be restored).

- "Hot backup" – a separate server copying every transaction on the main server; if the main server (cluster) fail, then the hot backup enters into action; In this configuration the downtime is a matter of minutes and the backup of data becomes a backup of service too (transforming this option into a high availability-based one); This option with Microsoft SQL Server 2005 does not require a separate license for hot backup server, unless the passive server has more processors than the active server, and the active server is licensed under the per processor model. Still a cold back-up is required on an offline storage media (in order to duplicate the data).

V.C. Hardware Needs

There is clear distinction, hardware wise, between the 2 major needs:

- Data storage/warehousing power needs
- Computing/processing power needs (for this please consult "Feasibility Study of a High Performance Computing Facility for the Romanian National Meteorological Administration" Deliverable)

Description of OLTP/OLAP approach

- The **central data storage system** will have a double role in storing OLTP data and OLAP data. These systems can be installed on 2 separate machines which should be a cluster database server and a smaller server as a hot (online) backup system, at RNMA in Bucharest.

- Also, we are suggesting the acquisition of **database servers at the Regional Centers (7)** in order to move or synchronize the MS Access application to a Server-like database management system (e.g. Microsoft SQL Server 2000/2005) to upgrade the data collection system.

	Minimum	Recommended
RNMA HQ central replication endpoint	1 node RAID 5, 10000 rpm, 8 MB cache, HDD Node Configuration: 1 processor 3 GHz 2 GB RAM	2 nodes RAID 5, >10000 rpm, 16 Mb cache HDD Node Configuration: 2 processors 4 GHz 4 GB RAM
RNMA HQ hot backup server	1 processor 3 GHz RAID 5, 10000 rpm, 8 MB cache, HDD 2 GB RAM	2 processors 4 GHz RAID 5, >10000 rpm, 16 Mb cache HDD 4 GB RAM
RNMS RFC servers (7 servers)	1 processor 3 GHz 1 GB RAM	1 dual-core proc 3 GHz 2 GB RAM

Note: If the operating system under which system will run will be Windows based, be sure to require equipment that is HCL compliant. For more information see http://www.microsoft.com/whdc/hcl/search.mspx. If the above configurations become obsolete at the moment of hardware bid, please reconsider updating those configurations appropriately;

For the size of hard drives please consider using the SAN of supercomputing system at the central location. This is why we didn't specify the storage size of the hard drives. This parameter will also depend on the future amount of data;

Regarding the vendors please choose among Cray, SGI, IBM, and HP given the local presence of these companies in Romania. IBM seems to have an advantage given the fact they will provide, most probable, the super computing system. We highly recommend RNMA not to acquire non-brand/no-name equipments.

Possible price quotations, based on IBM and HP offers, are given below:

Type/Level of hardware	Price
HQ Operational failover cluster – 1 node	$4500
HQ Operational failover cluster – 2 nodes	$6500
HQ central replication endpoint – 1 node	$4500
HQ central replication endpoint – 2 nodes	$6500
Hot backup server	$6500
Branch servers	$7500

For detailed minimal and recommended hardware configuration of RDBMS servers please consult ANNEX A

- For the processing power needs we refer to the super computing system used for modeling purposes. For this please consult the supercomputing document "A High Performance Computing Facility for the Romanian National Meteorological Administration."

V.D. Software needs

Microsoft SQL Server 2005 will be implemented around the RNMA sites and developers will develop databases on separate machines. For developers, we recommend separate machines and licenses.

	QTY per proc recommended	Unit Price	TOTAL
MS SQL Ent Ed	1	$23,911	$23,911
MS SQL Std Ed	7	$5,737	$40,159
MS SQL Dev Ed	2	$50	$100
GRAND TOTAL:			$64,170

Please note that every licensed client have the right to use Ms SQL Personal Edition for free.

In some cases per user/per device licensing model is more convenient and should be carefully investigated before making the buying decision.

For sure implementing these new servers will imply some additional costs in terms of new development effort for in house applications. These tools are, at the moment, pure client-server applications (two tier). This implies that there is no middleware or business logic layer in this configuration. We highly recommend redesign of these applications in the "n-tier" fashion. Building a strong "business logic" layer will provide RNMA with great reusability and agility in terms of information systems. Considering average costs of Junior/Senior developers we provide an approximate estimation of involved costs:

Type/Level of service	Daily rate	Man-days	TOTAL
Junior DBAs/Devs	€ 150	25	€ 3750
Senior DBAs/Devs	€ 300	50	€ 15000
Project Management	€ 400	10	€ 4000
	TOTAL	85	€ 22750

Services could include:

- Database Schema Design (ERD – Entity Relationship Diagram)
- Development (writing code for applications and database itself)
- Moving Access Applications to RDBMS with minimal operational impact
- Moving GIS layouts into RDBMS
- Replication system (design and implementation)
- Documentation and training for new developed systems.

Other services that should be taken into account but are hard to be estimated in the scope of this feasibility study:

- Training for DBAs on the chosen RDBMS
- Technical support (hardware and software, including OS).

V.E. New HR allocation

We have two choices here: one is to invest in one or two high qualified (senior) individual that is able to manage in a centralized way, the other one is to hire 7 DBA's (6+1) with medium-skills that will manage the system according to well established policies.

Following is the situation of the needed personnel, for this system to operate in good conditions:

Level of qualifications	No.	Monthly Salary (net per person)	Yearly training costs (per person)
Senior DBA	2	€ 600	€ 600
Junior DBA	6	€ 300	€ 600
DB Developer (optional)	1	€ 500	€ 600
TOTAL	10		

Even there are 7 RFC, one of them (Muntenia) is in the same location with HQ so it can be administered by one of Senior DBAs.

V. Conclusions

Here are the key points regarding the database strategy inside RNMA:

- "*Romanian Operational Meteorological Database*" (ROMDB) is an important step in RNMA's strategy regarding database services. The central an regional locations must be consolidated un uniformized with an unified database both in terms of database platform and database entity relationship management. The replication of the data will transfer data around this distributed system in order to make available all the needed data at the corresponding level.

- We strongly encourage the upgrade of the regional Access data repositories to a robust 2PC flavor of RDBMS and the implementation of a replication mechanism via existing VPN.

- At the central location we believe is appropriate a failover configuration in order to assure high availability of the system

- At the moment, allocated human resources are insufficient and the additional training is required for existing staff.

- Choosing among available RDBMSes products on the market is a matter of price, easy of use and administer, easy to upgrade and availability of DBA's.

- Migration effort should be minimized choosing the right database solution.

ANNEX A – Minimal and Recommended Hardware Configurations

Minimal Configuration

HQ Operational failover cluster - 1 node	
Processor	Intel Xeon 3.2 Ghz, dual core, 1066MHz FSB, EM64T, 2x2MB cache L2
RAM	2GB PC2-5300 DDR2 667MHz fully buffered registered ECC
	12 DIMM slots, support for up to 48GB, support for memory mirroring, hot-spare memory
HDD	3 x 73GB HDD SAS hot swap, 10000 RPM
	3 x 146GB HDD SAS hot swap, 10000 RPM
Optical drive	CD-RW/DVD-ROM combo drive
Controller HDD/RAID	SAS controller, 256MB RAM, battery backup for cache, support for RAID 0, 1, 5, 10
Power supply	Two redundant power supply, hot-swap, 2 x 835W
Video	Integrated on motherboard, 16MB RAM
Network Interface	2 x Integrated Gigabit Ethernet 10/100/1000Mbps, full duplex, wake-on-LAN, Alert Standard Format 2.0, TCP Offload Engine, failover network
Slots	2 x PCI-Express x8 or 2 x PCI-X 64 bit/133MHz
	2 x PCI-Express x4
Ports	1 x Serial port; 6 x USB 2.0 (two on front panel); 2 x RJ-45; 1 x RJ-45 for system management; 2 x VGA port (one on front panel); 1 x SAS external connector
System management	Continuously monitors system environmentals (temperatures and voltages), operating system status, critical system components such as processors, VRMs, memory, fans, power supplies.
	Automatic notification and alerts; LAN and systems management interconnect remote access; Remote media (Virtual CD and floppy); Secure Socket Layer (SSL) and Lightweight Directory Access Protocol (LDAP); System power control.
	Predictive Failure Analysis (PFA) on HDDs, memory, VRMs, processors, and fans to help alert the system administrator of imminent component failure.
Case	2U rackmountable
Fans	Redundant, hot-swap, variable speed
Warranty	3 years on-site

HQ central replication endpoint - 1 node	
Processor	Intel Xeon 3.2 Ghz, dual core, 1066MHz FSB, EM64T, 2x2MB cache L2
RAM	2GB PC2-5300 DDR2 667MHz fully buffered registered ECC
	12 DIMM slots, support for up to 48GB, support for memory mirroring, hot-spare memory
HDD	3 x 73GB HDD SAS hot swap, 10000 RPM
	3 x 146GB HDD SAS hot swap, 10000 RPM
Optical drive	CD-RW/DVD-ROM combo drive
Controller HDD/RAID	SAS controller, 256MB RAM, battery backup for cache, support for RAID 0, 1, 5, 10
Power supply	Two redundant power supply, hot-swap, 2 x 835W
Video	Integrated on motherboard, 16MB RAM
Network Interface	2 x Integrated Gigabit Ethernet 10/100/1000Mbps, full duplex, wake-on-LAN, Alert Standard Format 2.0, TCP Offload Engine, failover network
Slots	2 x PCI-Express x8 or 2 x PCI-X 64 bit/133MHz
	2 x PCI-Express x4
Ports	1 x Serial port; 6 x USB 2.0 (two on front panel); 2 x RJ-45; 1 x RJ-45 for system management; 2 x VGA port (one on front panel); 1 x SAS external connector
System management	Continuously monitors system environmentals (temperatures and voltages), operating system status, critical system components such as processors, VRMs, memory, fans, power supplies.
	Automatic notification and alerts; LAN and systems management interconnect remote access; Remote media (Virtual CD and floppy); Secure Socket Layer (SSL) and Lightweight Directory Access Protocol (LDAP); System power control.
	Predictive Failure Analysis (PFA) on HDDs, memory, VRMs, processors, and fans to help alert the system administrator of imminent component failure.
Case	2U rackmountable
Fans	Redundant, hot-swap, variable speed
Warranty	3 years on-site

HQ hot backup server – 1	
Processor	Intel Xeon 3.2 Ghz, dual core, 1066MHz FSB, EM64T, 2x2MB cache L2
RAM	2GB PC2-5300 DDR2 667MHz fully buffered registered ECC
	12 DIMM slots, support for up to 48GB, support for memory mirroring, hot-spare memory
HDD	3 x 73GB HDD SAS hot swap, 10000 RPM
	3 x 146GB HDD SAS hot swap, 10000 RPM
Optical drive	CD-RW/DVD-ROM combo drive
Controller HDD/RAID	SAS controller, 256MB RAM, battery backup for cache, support for RAID 0, 1, 5, 10
Power supply	Two redundant power supply, hot-swap, 2 x 835W
Video	Integrated on motherboard, 16MB RAM
Network Interface	2 x Integrated Gigabit Ethernet 10/100/1000Mbps, full duplex, wake-on-LAN, Alert Standard Format 2.0, TCP Offload Engine, failover network
Slots	2 x PCI-Express x8 or 2 x PCI-X 64 bit/133MHz
	2 x PCI-Express x4
Ports	1 x Serial port; 6 x USB 2.0 (two on front panel); 2 x RJ-45; 1 x RJ-45 for system management; 2 x VGA port (one on front panel); 1 x SAS external connector
System management	Continuously monitors system environmentals (temperatures and voltages), operating system status, critical system components such as processors, VRMs, memory, fans, power supplies.
	Automatic notification and alerts; LAN and systems management interconnect remote access; Remote media (Virtual CD and floppy); Secure Socket Layer (SSL) and Lightweight Directory Access Protocol (LDAP); System power control.
	Predictive Failure Analysis (PFA) on HDDs, memory, VRMs, processors, and fans to help alert the system administrator of imminent component failure.
Case	2U rackmountable
Fans	Redundant, hot-swap, variable speed
Warranty	3 years on-site

Branch servers – 1	
Processor	Intel Xeon 3.2 Ghz, dual core, 1066MHz FSB, EM64T, 2x2MB cache L2
RAM	1GB PC2-5300 DDR2 667MHz fully buffered registered ECC
	12 DIMM slots, support for up to 48GB, support for memory mirroring, hot-spare memory
HDD	3 x 73GB HDD SAS hot swap, 10000 RPM
	3 x 146GB HDD SAS hot swap, 10000 RPM
Optical drive	CD-RW/DVD-ROM combo drive
Controller HDD/RAID	SAS controller, 256MB RAM, battery backup for cache, support for RAID 0, 1, 5, 10
Power supply	Two redundant power supply, hot-swap, 2 x 835W
Video	Integrated on motherboard, 16MB RAM
Network Interface	2 x Integrated Gigabit Ethernet 10/100/1000Mbps, full duplex, wake-on-LAN, Alert Standard Format 2.0, TCP Offload Engine, failover network
Slots	2 x PCI-Express x8 or 2 x PCI-X 64 bit/133MHz
	2 x PCI-Express x4
Ports	1 x Serial port; 6 x USB 2.0 (two on front panel); 2 x RJ-45; 1 x RJ-45 for system management; 2 x VGA port (one on front panel); 1 x SAS external connector
System management	Continuously monitors system environmentals (temperatures and voltages), operating system status, critical system components such as processors, VRMs, memory, fans, power supplies.
	Automatic notification and alerts; LAN and systems management interconnect remote access; Remote media (Virtual CD and floppy); Secure Socket Layer (SSL) and Lightweight Directory Access Protocol (LDAP); System power control.
	Predictive Failure Analysis (PFA) on HDDs, memory, VRMs, processors, and fans to help alert the system administrator of imminent component failure.
Case	2U rackmountable
Fans	Redundant, hot-swap, variable speed
Warranty	3 years on-site

Recommended Configuration

HQ Operational failover cluster - 2 nodes	
Processor	2 x Intel Xeon 3.2 Ghz, dual core, 1066MHz FSB, EM64T, 2x2MB cache L2
RAM	4GB PC2-5300 DDR2 667MHz fully buffered registered ECC
	12 DIMM slots, support for up to 48GB, support for memory mirroring, hot-spare memory
HDD	3 x 73GB HDD SAS hot swap, 10000 RPM
	3 x 146GB HDD SAS hot swap, 10000 RPM
Optical drive	CD-RW/DVD-ROM combo drive
Controller HDD/RAID	SAS controller, 256MB RAM, battery backup for cache, support for RAID 0, 1, 5, 10
Power supply	Two redundant power supply, hot-swap, 2 x 835W
Video	Integrated on motherboard, 16MB RAM
Network Interface	2 x Integrated Gigabit Ethernet 10/100/1000Mbps, full duplex, wake-on-LAN, Alert Standard Format 2.0, TCP Offload Engine, failover network
Slots	2 x PCI-Express x8 or 2 x PCI-X 64 bit/133MHz
	2 x PCI-Express x4
Ports	1 x Serial port; 6 x USB 2.0 (two on front panel); 2 x RJ-45; 1 x RJ-45 for system management; 2 x VGA port (one on front panel); 1 x SAS external connector
System management	Continuously monitors system environmentals (temperatures and voltages), operating system status, critical system components such as processors, VRMs, memory, fans, power supplies.
	Automatic notification and alerts; LAN and systems management interconnect remote access; Remote media (Virtual CD and floppy); Secure Socket Layer (SSL) and Lightweight Directory Access Protocol (LDAP); System power control.
	Predictive Failure Analysis (PFA) on HDDs, memory, VRMs, processors, and fans to help alert the system administrator of imminent component failure.
Case	2U rackmountable
Fans	Redundant, hot-swap, variable speed
Warranty	3 years on-site

HQ Operational failover cluster - 2 nodes	
Processor	2 x Intel Xeon 3.2 Ghz, dual core, 1066MHz FSB, EM64T, 2x2MB cache L2
RAM	4GB PC2-5300 DDR2 667MHz fully buffered registered ECC
	12 DIMM slots, support for up to 48GB, support for memory mirroring, hot-spare memory
HDD	3 x 73GB HDD SAS hot swap, 10000 RPM
	3 x 146GB HDD SAS hot swap, 10000 RPM
Optical drive	CD-RW/DVD-ROM combo drive
Controller HDD/RAID	SAS controller, 256MB RAM, battery backup for cache, support for RAID 0, 1, 5, 10
Power supply	Two redundant power supply, hot-swap, 2 x 835W
Video	Integrated on motherboard, 16MB RAM
Network Interface	2 x Integrated Gigabit Ethernet 10/100/1000Mbps, full duplex, wake-on-LAN, Alert Standard Format 2.0, TCP Offload Engine, failover network
Slots	2 x PCI-Express x8 or 2 x PCI-X 64 bit/133MHz
	2 x PCI-Express x4
Ports	1 x Serial port; 6 x USB 2.0 (two on front panel); 2 x RJ-45; 1 x RJ-45 for system management; 2 x VGA port (one on front panel); 1 x SAS external connector
System management	Continuously monitors system environmentals (temperatures and voltages), operating system status, critical system components such as processors, VRMs, memory, fans, power supplies.
	Automatic notification and alerts; LAN and systems management interconnect remote access; Remote media (Virtual CD and floppy); Secure Socket Layer (SSL) and Lightweight Directory Access Protocol (LDAP); System power control.
	Predictive Failure Analysis (PFA) on HDDs, memory, VRMs, processors, and fans to help alert the system administrator of imminent component failure.
Case	2U rackmountable
Fans	Redundant, hot-swap, variable speed
Warranty	3 years on-site

HQ hot backup server – 2	
Processor	2 x Intel Xeon 3.2 Ghz, dual core, 1066MHz FSB, EM64T, 2x2MB cache L2
RAM	4GB PC2-5300 DDR2 667MHz fully buffered registered ECC
	12 DIMM slots, support for up to 48GB, support for memory mirroring, hot-spare memory
HDD	3 x 73GB HDD SAS hot swap, 10000 RPM
	3 x 146GB HDD SAS hot swap, 10000 RPM
Optical drive	CD-RW/DVD-ROM combo drive
Controller HDD/RAID	SAS controller , 256MB RAM, battery backup for cache, support for RAID 0, 1, 5, 10
Power supply	Two redundant power supply, hot-swap, 2 x 835W
Video	Integrated on motherboard, 16MB RAM
Network Interface	2 x Integrated Gigabit Ethernet 10/100/1000Mbps, full duplex, wake-on-LAN, Alert Standard Format 2.0, TCP Offload Engine, failover network
Slots	2 x PCI-Express x8 or 2 x PCI-X 64 bit/133MHz
	2 x PCI-Express x4
Ports	1 x Serial port; 6 x USB 2.0 (two on front panel); 2 x RJ-45; 1 x RJ-45 for system management; 2 x VGA port (one on front panel); 1 x SAS external connector
System management	Continuously monitors system environmentals (temperatures and voltages), operating system status, critical system components such as processors, VRMs, memory, fans, power supplies.
	Automatic notification and alerts; LAN and systems management interconnect remote access; Remote media (Virtual CD and floppy); Secure Socket Layer (SSL) and Lightweight Directory Access Protocol (LDAP); System power control.
	Predictive Failure Analysis (PFA) on HDDs, memory, VRMs, processors, and fans to help alert the system administrator of imminent component failure.
Case	2U rackmountable
Fans	Redundant, hot-swap, variable speed
Warranty	3 years on-site

Branch servers – 2	
Processor	Intel Xeon 3.2 Ghz, dual core, 1066MHz FSB, EM64T, 2x2MB cache L2
RAM	2GB PC2-5300 DDR2 667MHz fully buffered registered ECC
	12 DIMM slots, support for up to 48GB, support for memory mirroring, hot-spare memory
HDD	3 x 73GB HDD SAS hot swap, 10000 RPM
	3 x 146GB HDD SAS hot swap, 10000 RPM
Optical drive	CD-RW/DVD-ROM combo drive
Controller HDD/RAID	SAS controller, 256MB RAM, battery backup for cache, support for RAID 0, 1, 5, 10
Power supply	Two redundant power supply, hot-swap, 2 x 835W
Video	Integrated on motherboard, 16MB RAM
Network Interface	2 x Integrated Gigabit Ethernet 10/100/1000Mbps, full duplex, wake-on-LAN, Alert Standard Format 2.0, TCP Offload Engine, failover network
Slots	2 x PCI-Express x8 or 2 x PCI-X 64 bit/133MHz
	2 x PCI-Express x4
Ports	1 x Serial port; 6 x USB 2.0 (two on front panel); 2 x RJ-45; 1 x RJ-45 for system management; 2 x VGA port (one on front panel); 1 x SAS external connector
System management	Continuously monitors system environmentals (temperatures and voltages), operating system status, critical system components such as processors, VRMs, memory, fans, power supplies.
	Automatic notification and alerts; LAN and systems management interconnect remote access; Remote media (Virtual CD and floppy); Secure Socket Layer (SSL) and Lightweight Directory Access Protocol (LDAP); System power control.
	Predictive Failure Analysis (PFA) on HDDs, memory, VRMs, processors, and fans to help alert the system administrator of imminent component failure.
Case	2U rackmountable
Fans	Redundant, hot-swap, variable speed
Warranty	3 years on-site

Accessories (optional)

RACK 42U + ACCESORII	
Rack	Rack 42U with perforated front door, improved air flow for a fan-free environment, thermally optimized to support high heat and power loads, six side-wall compartments to support 1 U-high power distribution units (PDU)s and switches without taking up valuable rack space, cable management system, easy to install and remove side panels, front door hinged on either side to provide flexibility to open in either direction, split rear door for improved serviceability and access, front and rear doors and side panels include locks and keys; made by the same vendor as for the servers
Flat-Panel Monitor Console Kit	1U 17" TFT, 1280x1024, Brightness: 250 cd/m2, Contrast:400:1, Viewing angle: 150 degrees to 115 degrees (H/V); PS/2 keyboard with built-in navigation system, touchpad and trackpoint; made by the same vendor as for the servers.
KVM Switch	16 x RJ-45 ports, 1 x RS232 port, 2 x PS/2, 1 x VGA for console, KVM cables for connecting the servers
UPS	3000VA, 6 x IEC 320-C13, 1 x 1 IEC 320-C20 (PDU support), Connections for management: USB, serial, and 10/100 Network Module, rackmountable 2U, 1 hot-swappable internal battery provides more than four minutes of run time at a load of 2700W, supports up to four extend run battery packs for approximately 90 additional minutes of run time
Multiple power outlet	Multiple outlet 220V-240V, 50/60Hz, 7 output connectors IEC 320 C13, 1 input connector IEC 309 C20, 15A
Power cords	For connecting the servers to UPS

TASK 3

COMPUTING NEEDS ASSESSMENT TO SUPPORT MODELS

III. COMPUTING NEEDS ASSESSMENT TO SUPPORT MODELS (TASK 3)

A. General

Existing and potential future modeling approaches were reviewed under the TOR Task 3, with RNMA staff in Bucharest to determine existing equipment, software, and institutional arrangements for data input and modeling for the Romanian National Meteorological Agency. The initial meeting was held in May 2005, and a Memorandum report describing the characteristics of the system was written and reviewed by all participants. A revised version of that Memorandum report became the basis for the subsequent steps.

The United States subconsultant for matching modeling intents and needs with computer capabilities, The Ohio State University and the Ohio Supercomputer Center, coordinated with RNMA to identify the governing parameters. The computer demands for expected modeling programs were quantified based on the climatological modeling needs, as the air pollution and agricultural modeling needs are smaller and can be met by relatively small computers. The primary components of a high performance computing facility were identified as to manufacturer, models, and cost.

The information developed in cooperation with RNMA has been integrated into the Interoperate Project Feasibility Study of Relational Database Management Systems for the Romanian National Meteorological Administration.

B. Introduction

As part of the INTEROPERATE project, the Romanian National Meteorological Administration (RNMA) desires to purchase a high performance computer (HPC) system to support numerical weather prediction simulations as well as storage of weather observations. This system must support both operational meso-scale weather models as well as a variety of related research applications. The system must integrate with other aspects of the INTEROPERATE project, such as remote sensing devices and Doppler radar imaging. Moreover, given that the system will provide daily weather forecasting information for all of Romania, the system must be a production-grade, highly available solution integrating high performance computing resources with data storage. Both short-term storage of weather forecast data products and longer-term archival storage of reduced forecast data as well as remote sensing and radar data must be supported.

This report presents one possible system which could fulfill RNMA's needs. The report consists of two parts. The first part assesses the computing needs and current capabilities of RNMA with respect to meso-scale weather forecasting, and will present a number of design criteria which must be met by a system which would fulfill RNMA's needs. The second part of the report will present two system configurations and explain how those systems would meet the design criteria.

C. Assessment of Requirements and Current Capabilities

1. Computational Requirements

RNMA's primary application is meso-scale weather forecasting. There are several widely used applications in this space, including MM5 and its successor WRF in the United States, and ALADIN and AROME in Europe. While these codes vary in their numerical approaches, like many other classes of scientific computing applications their performance characteristics are dominated almost entirely by memory bandwidth. Systems with *high memory bandwidth* – that is, a very high rate of sustained data transfer between the processors and main memory -- have been demonstrated to have superior performance on meso-scale weather forecasting applications compared to systems with higher peak floating point performance but lower memory bandwidth. High memory bandwidth has therefore been identified as a key design criterion.

2. Data Storage Requirements

While meso-scale weather forecasting is RNMA's main computing application, the data products from the forecast computations are not the sole type of data that they need to store. Satellite and Doppler radar imaging data must also be stored, along with remote sensing data generated by other components of the INTEROPERATE project. Very broadly speaking, these data fall into two very broad categories, operational and archival. Operational data is primarily the full output of the meso-scale weather forecasts and is relatively ephemeral; currently RNMA only keeps forecast output for 17 days, although they would like to extend that to an *operational data lifetime of 30 days* if possible. A lifetime of at least 30 days for operational data has therefore been identified as a key design criterion. Archival data, on the other hand, is to be kept for as long as possible – preferably forever. Examples of archival data include satellite and Doppler radar imagery and reduced forecast output.

3. Operational Requirements

RNMA forecasts weather for the entire nation of Romania, which includes several mountainous regions prone to flash flooding. As a result, RNMA requires a very

high degree of *redundancy and fault tolerance* from its production computing system. Single points of failure need to be minimized or eliminated wherever possible, in all aspects of the system. Moreover, the system should have sufficient capacity to keep running the production forecasts in the face of hardware failures in a significant fraction of the system, at the expense of RNMA's research applications if need be. As a result, redundancy and fault tolerance have been identified as key design criteria.

4. Current Capabilities

RNMA currently has two local computing systems used for meso-scale weather forecasting, a Sun E4500 system with eight processors and a 28-processor cluster of commodity systems running Linux. Most of RNMA's production forecasting runs are done using the Sun E4500. Compiler problems on the Linux cluster system are cited as the main reasons of that system's lack of adoption; *vendor compiler support* is considered critical and therefore a key design criterion.

Planning for future collaborations with other European countries is another important consideration. Many other European nations have discussed the computational aspects of weather modeling projects, but relatively few discuss a complete data lifetime solution from acquisition through transfer and storage to numerical modeling, data reduction, and archiving. Upon Romania's entry to the European Union, RNMA would also have access to the HPC facility at the European Center for Medium range Weather Forecasting (ECMWF), which is a cluster of IBM Power4 p690 systems. *Compatibility with ECMWF* is therefore seen as an important part of any future system acquisition and a key design criterion.

With regard to data storage, RNMA currently has several separate pools of online storage allocated to particular projects, with a total capacity of approximately 1.2 terabytes. Offline storage is currently done to a variety of media, including optical (recordable CDROMs and DVDs) and magnetic (4mm DAT). Because the offline storage is handled separately for each type of data, there is to the authors' knowledge no master index of all the data and no automated way of recalling offline data back to online storage. This situation could be remedied with *hierarchical storage management of*

archival data, using a centralized data archive such as a magnetic tape library. As a result, hierarchical storage management for archival data is seen as a key design criterion.

Table 1: RNMA Storage Pools

Project	**Current Capacity (GB)**	**Space Currently Used (GB)**	**Current Growth Rate (GB/month)**	**Projected Growth Rate (GB/month)**
Climatological Database	50	15	0.5	2
Forecast Data	~50(?)	~50(?)	31	100
Radar Data	604(?)	604(?)	25.4	25.4
Satellite Data	500	500(?)	100-150	100-150

D. Proposed System

As described in the previous section, RNMA's computing and operational requirements result in the following design criteria:

- High Memory Bandwidth
- Redundancy and Fault Tolerance
- Vendor Compiler Support
- Operational Data Lifetime of 30 Days
- Compatibility with ECMWF
- Hierarchical Storage Management of Archival Data.

A computations and data storage system has been proposed for RNMA's needs. The recommended system provides the technical performance required in the preceding section and identifies specific equipment meeting their needs. Equipment from other manufacturers with equal characteristics and capabilities may be equally acceptable to RNMA. The equipment characteristics provided are in Attachment A.

TASK 4

METEOROLOGICAL TRAINING NEEDS ASSESSMENT (MET-TRAIN)

IV. METEOROLOGICAL TRAINING NEEDS ASSESSMENT (MET-TRAIN) (TASK 4)

A. Background

The benefits of developing a training program for any National Meteorological Agency are significant. Training programs serve to continuously infuse developing science and technology into existing operations. This serves to maintain a level of expertise that is consistent within a national program as well as current with the domestic and international research and development. A continuous training program that is constantly updated with new and emerging interpretive tools and methods will assure the best application of the existing observation equipment in Romania. A well conceived training program will enhance and stimulate learning. This will in turn allow the atmospheric scientists of Romania to provide the best possible service.

The National Meteorological Agency of Romania has made a significant investment of purely technological solutions, such as a Doppler radar network, local-scale surface data, upper air radiosonde observations, lightening detection network, hydrological buoy sensors, MSG receiving and processing systems, central and regional forecast centers, and a VSAT communication network. Much of this new infrastructure was made available as recently as 2003 as part of the implementation of the SIMIN program.

The RNMA has developed its own meteorological training program in 2004 as part of a National School of Meteorology (NSM), with two training facilities in Bucharest and one in the Dobrogea-Constants district office. Among the courses organized during the past two years, those on nowcasting were attended by more than 100 specialists. Nowcast training was focused on meteorological and aeronautical forecasts. There has also been a great deal of interest in hydrological and water management, in particular hydro-meteorological risk phenomena where 55 specialists participated in the sessions.

There is a great desire to enhance the NSM as a way to integrate the meteorological community in Romania with the general European meteorological community. An advanced NSM will allow for such programs as regional NWP education and provide a state-of-the-art training centre in south-east Europe.

B. Needs

1. General

The RNMA requires training not only in meteorological practices but also general information technology.

General training needs cited by RNMA related to meteorological practices include the following:

- Organize theoretical courses and seminars for the NWP topics covering a wide range of spatial and temporal scales: from local scales (using LES techniques) to the regional climatic scale;

- Organize practical work for the numerical weather prediction models use and exploitation (including the implementation aspects) of different degree of complexity, followed by individual or group mini-projects;

- Provide training for the use of diagnostic, validation and visualization tool;.

- Provide training for coupling NWP models with other models (hydrological, agro-meteorological, pollutant transport and dispersion) to approach the acute economic and social problems involving meteorological and climatic factors;

- Organize discussions and workshops on thematic or regional interest;

- Establish a dedicated page on the NSM web site for the dissemination of common interest NWP information and forum discussions.

General training needs related to Information Technology have been identified as follows:

2. **Supercomputer**

1. Training for the supercomputer monitoring operator.

2. Training for the supercomputer administration (system architecture, OS administration, access and security administration, queuing system etc).

3. Training for supercomputer users:

   a. System architecture
   b. Operating system
   c. Fortran & C compiling environment
   d. Program debugging
   e. Introduction to parallel programming (MPI, Open MP, porting MPI programs)
   f. Optimization and profiling
   g. Batch system and results storage.

4. Training for maintenance of the supercomputer support systems (air conditioning, electric supply, etc.)

3. **Databases**

1. Training for database administrators (installation and configuration, maintenance, design, save and restore functions, optimizing, security and administration of users etc.).

2. Training for the administrators of OS on which the databases are run; training for network administrators.

3. Training for database users (presentation on interface - working procedures, access, updating, storage, etc).

4. Training for the database operator (surveillance of database parameters, available space, bands handling etc.).

C. Existing Courses

Courses organized by NMA/NSM

- **Basic Education** (designed for the NMA's new employees), including NWP modules

  - Basic courses on meteorology
  - Weather prediction

- ***Ongoing Education***

  - General meteorology
  - Radar meteorology
  - Agrometeorology
  - Agrometeorological measurements and observations
  - Nowcasting warning
  - Course on Solar Radiation
  - GPS systems use in meteorology
  - How to use the SIMIN application

- ***Meteorological Specialized Training***

  - Satellite meteorology
  - Radar meteorology and nowcasting
  - Radar meteorology, nowcasting and severe weather warnings

- ***Complementary Training***

  - Basic knowledge in UNIX
  - C language elements
  - Windows XP
  - Introductory courses on GIS
  - How to use GIS
  - Implementation and configuration of surface observation procedure

- ***Long Distance Education***

  - Meteorological measurements and observations
  - Introductory courses on satellite meteorology

- ***International Courses***

  - Doppler Radar and Satellite Meteorology for Nowcasting.

D. **Training Assessment and Recommendations**

1. Meteorology

Elements of the training should cover the most important meteorological topics and challenges to Romania. The following topics should be relevant in Romania and should be part of a national meteorological training program. The RNMA has already incorporated many of these topics within their existing courses. The courses that are included as a topic under the existing training program are indicated by a " * " appended to the heading. It may be appropriate to modify and upgrade these existing courses in consideration of the new programs, equipment and procedures being implemented under INTEROPERATE.

Residence training in the following meteorological subjects would be held at regular intervals, usually not more than once per year. Distance training course would of course be available on an as-needed basis. The instructors would be comprised of various specialists from RNMA who have in mind the specific needs of the meteorological community in Romania.

Climate Variability

A climate variability program would integrate research on climate and global change especially focusing on the impact of global change on weather conditions in Romania.

Convective Weather

This course would discuss the basic principles of warm season convective weather with the aim of improving the prediction of severe weather.

Emergency Management

This would describe the involvement of RNMA as part of an Emergency Management function. A review of meteorological events that would trigger an Emergency Management function would be discussed, detailing the RNMAs role in Emergency Management.

Hydrology/Flooding

This would describe various elements of hydrology, such as, runoff processes, stream-flow routing, and urban flooding. The importance of anticipating hazardous weather and the associated community risk should be discussed.

*Mesoscale Meteorology**

This course would describe and discuss mesoscale meteorological processes that are important in Romania and the region in general. Mesoscale convective systems and the use of radar in mesoscale analysis would be reviewed.

NWP (Modeling)

This course would describe the model fundamentals focusing on the models used in Romania. Each model will be discussed and fully characterized. Such things as Ensemble Models will be described with advantages and disadvantages thoroughly discussed.

Quantitative Precipitation Forecasting (QPF)

An overview of Quantitative Precipitation Forecasting will be provided. Synoptic and Meso-scale phenomena that contribute to high QPF will be reviewed, especially in the vicinity of mountains where orographic enhancement can create more precipitation than is forecasted from NWP models.

*Radar Meteorology**

This would be a workshop on radar applications in Mesoscale Meteorology which will focus on severe weather and extreme precipitation episodes.

*Satellite Meteorology**

A course in Satellite Meteorology will train the Meteorologist on feature identification using environmental satellites. An example of these features can be such things as cloud types to evidence of dynamic processes. Using satellite to validate NWP forecasts is a good subject of discussion.

Winter Weather

This will focus on winter weather conditions, and local forecasting techniques to help augment NWP predictions. Subjects such as icing assessment, and precipitation regimes based on trough characteristics are excellent topics.

Agro-Meteorology Modeling *

This will focus on the tools used for Agro-Meteorology, specifically models as well as surface observation network and implications of climate variability on long range predictions.

Air Pollution Meteorology *

This will introduce elementary air pollution measurements and parameters. Meteorological events that contribute to exceptional events will be discussed, along with the characteristics of models that are used for air pollution guidance in Romania.

2. Information Technology

With the addition of a supercomputer and various software solutions there will be training required for the staff that is responsible for maintaining the supercomputer and supporting sub-systems. Most, if not all, of this training would be available commercially from the entity that has provided the respective solution. It is suggested that there be at least two specialists trained in each subject areas. One specialist would serve a primary function for support, and the other specialists will be used in the event the primary specialist is not available. Specialists can also serve primary or secondary support functions in more than one area, especially those areas that are closely related, such as System Administration and System Programming.

A typical budget for training an IT staff in topics provided below would be on the order of $50,000 USD. This would not include staff time.

Supercomputer System Administration (Security and Operating System)

This would not be offered as a continuous training program, but rather training for at least two individuals that will be tasked with administering the supercomputer. It is suggested that the training be provided directly by the supercomputer manufacturer, and not through third parties.

Supercomputer System Operations

This would not be offered as a continuous training program, but rather training for at least two individuals that will be tasked with operating the supercomputer. It is suggested that the training be provided directly by the supercomputer manufacturer, and not through third parties.

Supercomputer System Programming

This would not be offered as a continuous training program, but rather training for at least two individuals that will be tasked with system programming on the supercomputer. It is suggested that the training be provided directly by the supercomputer manufacturer, and not through third parties.

Database Administration

This would not be offered as a continuous training program, but rather training for at least two individuals that will be tasked with database administration. It is suggested that the training be provided directly by the database supplier, and not through third parties.

Database Programming

This would not be offered as a continuous training program, but rather training for at least two individuals that will be tasked with database programming. There a shorter course provided by those using the database, and not necessarily

populating the database. It is suggested that the training be provided directly by the database supplier, and not through third parties.

Application Programming (FORTRAN, MPI-IBM, Parallel Systems Programming)

This would be offered on a continuous basis for the scientists involved in writing or modifying programs, in particularly numerical prediction models. It is extremely important that the scientist know how to efficiently program in order to take the best advantage of the supercomputer resources.

Web Programming (HTML, PHP, APACHE, JAVASCRIPT, CGI programming)

The Web interface has provided an excellent medium for the display of information and is widely accepted and used throughout the world. Web programming will provide a great assistance as a front end to the database, providing meteorological data dissemination. The Web can also be used as an interface to an online distance learning program, to carry out at least part of the expanded training suggested above for inclusion in INTEROPERATE.

E. Training Facility and Methods

It will be important to have a combination of both resident and distance training courses. Training should also strongly consider distance courses of other countries and communities, especially in the case where the equipment being used or the science being applied is identical to that of other countries. An example of this is the COMET program and specifically the Meteorology Education & Training program of the United States. Many of the courses, such as the theory of radar, or interpretation or radar would be applicable to scientists all over the world. If the RNMA would like to adapt the training to Romania or the general Eastern European region, the general framework of these courses can be adapted to regional weather issues.

Great gains can be made from a well structured distance learning program. This will allow every student to listen to the most effective instructor for a given topic. Students can review the material as needed. Though there are some drawbacks by not having the resident course interaction with other students, still a great deal of information can be conveyed through an effective online distance training course.

TASK 5

EVALUATION OF THE SOCIAL, ECONOMIC, ENVIRONMENTAL AND POLITICAL IMPACT GENERATED BY THE PROPOSED SYSTEM

TASK 5

EVALUATION OF THE SOCIAL, ECONOMIC, ENVIRONMENTAL AND POLITICAL IMPACT GENERATED BY THE PROPOSED SYSTEM

GENERALITIES

On the background of the climate change occurring at global scale, atypical and hazardous phenomena, dramatically intense, are being happening in Romania, especially in the latest years.

Thus, in 2005, floods from overflowing by water courses, discharges and damages to dams and small storages, water flows on mountain sides, as well as the hazardous weather phenomena (especially wind gusts, hail and thunder strikes) affected every county in Romania, along with 1734 localities. The overall damage value was estimated at 5,975,201.5 thou. RON (approximately 1,707,200 thou. Euro).
http://www.mmediu.ro/ape/inundatii%202005/raport%20cmsu.pdf

76 people were killed. 93,976 houses and households, along with 1063 economic units were damaged and more than 656,392 ha. of agricultural land were severely affected. The infrastructure suffered heavy damage, as follows, by categories: 9860.63 km of county and commune roads, 560.4 km of national roads, 2465.84 km of streets in localities, 2644.9 km of forest roads, 913 bridges and small bridges, 23.8 km of rail road, water supply networks, power and telephone networks.

There were also severely damaged 630 hydrotechnical buildings serving to the defence against floods, mainly dams, reinforcement and bank defence works, water flow regularizations, all requiring urgent restoring.

Forecasting and preventing the effects of hazardous meteo-hydrological events, as well as initiating programs to increase population safety - not only at national, but also at trans-boundary level are priorities of the Romanian Ministry of the Environment and Sustainable Development (MMDD), that has launched and approved for financing a series of programs for the management of crisis situations in the field of hydro-meteorology and waters, as are the projects SIMIN, DESWAT and WATMAN.

Implementing these national programs for management insurance in crisis situations specific to the field of environment protection and water management is performed within a unitary and integrated system, able to cover simultaneously the needs of as many national beneficiaries as possible – a solution that also ensures a better cost-performance ratio.

Through developing these national programs, it is being attempted to obtain significant performance concerning the following:

- precise detection in time and space of the meteorological phenomena, of the abundant precipitation amounts, of thunder strikes and storms, anticipation of hail events, so as to allow its timely suppression, anticipation of glazed frost, fog and other phenomena occurrences, hazardous to the transport activity;
- detection of turbulence, wind gusts, icing conditions, thunder strikes (critical to aviation);
- detection of the Black Sea and Danube state, as well as of the phenomena critical to the traffic (weather conditions, wave parameters, direction of the currents, visibility a.s.o.);
- early detection of smoke from forest fires and technological blasts;
- anticipation of atmospheric pollution dispersion, through developing air quality and pollution forecasts, resulting in the reduction of the impact exerted by the hazardous polluting activities on the environment;
- anticipation of high floods occurrence and of the areas likely to be flooded ;
- anticipation of extreme discharges and volumes for a proper management of the large storages and mitigation of the effects induced on the water supply services;
- etc.

The experience gained from the already achieved programs has highlighted the need to develop an information component apt to ensure the improvement of the processing capabilities with respect to the large volume and multitude of data and information resulted from the monitoring subsystems specific to the fields of meteorology, hydrology and water management and also the use of specialized computation systems, capable to perform mathematical modelling and numerical forecasting, on short and mean terms respectively, at local and national level.

In this context, the Feasibility Study named **INTEROPERATE** – "**I**Ntegrated Clima**T**ology, Agro-m**E**teo**RO**logical, Air-**P**ollution for**E**cast wa**R**ning, Comput**A**tion and **T**raining **C**entre"- attempts to be a component integrated in this unitary system of crisis situations management in the field of hydrometeorology and waters.

With this new component, Romania, through the Ministry of the Environment and Sustainable Development will round off its strategy in the field of meteorology and waters, adding a new dimension through the completion of a highly performing national modelling, processing and data-storing system, necessary for the elaboration of synthesis products and specific decision-making elements, at local, national and trans-boundary levels, for the management of hydro-meteorological crisis situations.

This new component, highly performing in using the most modern information technologies, will result in:

1. The increase of the climatological, atmospheric, agrometeorological and air quality data;
2. The implementation of a very powerful computation system (supercomputer), capable to lead to the improvement of the performance of the mathematical modelling and numerical forecasting over short and mean term respectively, for national demands and for use in a regional context;
3. The generation of new products, with added value, through information advanced processing and integration (with very powerful computation equipment, endowed with fast management capabilities with respect to specialized data bases);
4. The upgrading of the national agrometeorological monitoring system and obtaining specialized products necessary to mitigate the effects of agro-climatic changes and to identify those agricultural areas vulnerable to the hazardous meteorological factor effects;
5. The development of the national air-quality and pollutant transport forecasting system, the use of fine resolution physical-mathematical models necessary to the urban areas and the critical points, and also for the sites of the nuclear power plants.

SOCIAL IMPACT OF THE PROPOSED "**INTEROPERATE SYSTEM**"

The proposed system is a part of and adds efficiency and quality to the activity of the National Meteorological Administration in Romania, which, according to the law, applies the national strategy regarding the aerial environment monitoring, the scientific research and the supply of specialized services for the meteorological protection of life and property. http://www.inmh.ro/index.php?id=238 *(Government Decision no. 1405, Official Gazette no. 841 / 2004, for approving the National Meteorological Organizing and Functioning Regulations).*

Health and life will be subjected to a smaller risk. The components of the proposed system will lead to an increase of the quality and accuracy of the meteorological forecasts and warnings. Augmenting the number of observations and measurements through the component of developing the automated weather stations will result into better monitoring of the weather aspects (the Weather Watch Program), whereas the component for developing the computation power (supercomputer) will allow to approach local scale numerical modelling high resolution techniques, which will increase the lead time for anticipating the severe weather phenomena that cause big troubles to the people's life and activity.

Thus, indirectly, through implementing the components of the proposed system, hazards will be mitigated, as regards the health and life of the citizens of Romania from locations prone to flooding or damaging in the aftermath of extreme weather phenomena (storms, thunder strikes, catastrophic precipitation causing high floods etc.).

With timely and high-quality forecasts and meteorological warnings, specialists in hydrology will be able to issue earlier and more accurate flood warnings, which will increase the lead time available to evacuate the population to higher elevations.

Timely weather forecasts, warnings in situations when hazardous meteorological phenomena occur will supply decision-makers those elements necessary to pre-planning for emergency situations. Under these circumstances, proper locations will be established and chosen in due time, so as to serve as temporary shelters during evacuation actions and assistance will be given to people during the periods when their health and life are put to risk.

The authorities bearing responsibilities in the field of emergency situations assistance will be offer to supply other assistance types also, in a centralized manner, for instance – clean drinking water, food and heating for the affected citizens. This aspect might be important in preventing illnesses and deaths caused by diseases in the post-emergency period.

Increasing the computation power in the field of the weather forecasts will allow to approach advanced technologies (OPEN GIS) in numerical modelling for the dispersion of the pollutant transport, which will lead to the possibility to detect, track and issue warnings in due time on the evolution of atmospheric pollutants in critical situations (nuclear accidents a.s.o.).

This will allow decision-makers to take measures for eliminating the potential danger that the people's health would be affected in such situations.

Meteorological warnings and forecasts will become clearer and more accurate.

An objective of the proposed system is that data resulted from SIMIN be used completely, approaching new data-processing models. Following the increase of the computation power, meteorological forecasts and warnings will point at the severe weather situations earlier and will be more accurate and better spatially localized.

INTEROPERATE project, in correlation with DESWAT and WATMAN, will implicitly lead to an increase in the accuracy of the hydrological forecasts and warnings and surfaces affected by particularly severe floods will be better delimitated. This will allow the authorities to recommend or request only the evacuation of those areas really subjected to hazards and give the correct answer, in really exposed areas.

Developing the component concerned with modernizing the automated stations network will result in an increased number of measurements and the completion of the climatological statistical data series.

The proposed system will thus support the achievement of studies, in view to classify and delimitate certain areas prone to highly hazardous, severe weather phenomena.

All these will be additional elements to the preparation of the development plans and will allow better definition of flooding hazards to certain areas, enabling better decisions as regards emergency responses, post-emergency recovery and the long-term programs for the mitigation of flood-induced damages.

Better decisions will be taken, so as to substantially improve the life of residents subjected to hazards connected to events bearing an urgent character, as are especially floods.

Decision-making on the grounds of correct information is important, because detaining it allows more efficient use of available funds.

Correct and thoroughly substantiated analyses augment population confidence and the acceptance degree for any government program.

A concise, clear and easy-to-implement information/warning system

Flexibility of the proposed system and diversity of resulted information will lead to the establishing of certain concise, clear, and easy-to-implement standards on elaborating severe weather warnings and, implicitly, to the limitation of social effects on human communities.

An important objective of the system is to earlier issue more accurate weather warnings.

By using modern techniques to localize weather phenomena through georeferencing (OPEN GIS), the system to be implemented will be able to delimit faster and with better accuracy areas (localities, objectives etc.) that could be affected by certain severe weather phenomena (storms, tornadoes, abundant rain, thunder strokes etc.).

Thus, the system is able to issue precisely localized NOWCASTING warnings, which are entered into an automatic dissemination system, allowing decision-makers to take the most adequate steps and suggest or even request the evacuation of only the high-risk areas, responding correctly in those really endangered areas.

Also, the system makes possible the identification and classification of certain areas by risk degree, in order to be carried out emergency plans and risk-mitigation programs, such as those ensuring protection against floods.

The system allows us to elaborate clearer standards on NOWCASTING warnings (Warning by code of colours: RED, ORANGE, YELLOW) and to carry out an information system easily "accepted" by the general public.

SCIENTIFIC IMPACT AND ECONOMIC BENEFITS OF THE PROPOSED INTEROPERATE SYSTEM

Modernizing the weather observations and measurements network

The proposed INTEROPERATE system, modernizing its weather station network by implementing new automatic stations, will bring about significant economic benefits. A simple analysis shows us that acquiring an autonomous automatic station in standard configuration (hardware, software, communication equipment, system integration) costs around 15 000 Euro, while the annual mean costs for a standard weather station are of about 22-25 000 Euro (operating expenses, equipment, staff etc.).

This investment will be recovered in less than one year, expenses for operating autonomous automatic stations (maintenance/operation, IT&C staff) being far lower.

Development in Climatology

The monitoring techniques implemented within the proposed system shall be used in mitigating the negative severe weather impacts both on economy as well as on the agricultural

ecosystems of affected areas. Thus, improving the present-day agrometeorological monitoring network with new sensors to measure specific parameters and integrating obtained information within a support system will ensure an operative information system and a basic scientific assistance in decision-making on the occurrence and extension of agricultural risks.

Real-time evaluating and monitoring of agrometeorological risk factors (drought, heat, in-soil water excess/deficit, etc.) and their mapping on our country's agricultural territory over the season of crop vegetation allow us to identify in due time the most vulnerable agricultural areas and disseminate information to users (farmers, decision-makers in agriculture), in order for them to take adequate steps (irrigations, fertilizing, agricultural techniques to maintain in-soil water etc.).

This project will improve the monitoring of agricultural parameters, by using highly efficient techniques and methods (mathematical modelling, GIS, remote sensing), particularly for evaluating the condition of crop vegetation, moisture and dynamics of in-soil water deficit, in order to assure the best agricultural management.

Developing air quality and pollution forecasts is very important as it is an entirely new field in Romania. Expected impact is high because certain industrial (polluting industries) and social sectors (urban planning, municipalities) could derive a benefit from their development.

Having got a daily forecast of each industry's polluting potential as well as of the traffic impact, strategies could be developed to reduce the environmental impact of severely polluting activities. Situations of risk and extreme danger (including terrorist threats that involve certain chemical products and radioactive materials) can be scientifically approached, but as regards this field some work still needs to be done in the new NATO member, Romania.

As to the structural development and capacity building, this project is expected to develop and mostly use highly specialized IT&C staff (software-hardware engineers, applied electronics engineers to maintain the automatic weather stations, database administrators, WEB specialists, programmers etc.).

At the same time, the project will be an additional support for initiating new externally-financed projects, an explicit contribution to the international meteorological community's life, and a strong focal and *de facto* position in the (sub-) region.

As a matter of fact, the pressing demand of experts is estimated to have a significant impact in related domains, as meteorology presents a wide range of interdisciplinary connections, wherein well-trained experts in meteorology are highly appreciated.

The increase in computing power and in automatic weather data processing capacity shall be focused on two directions: a super-computer and the storing and database system. A super-computer will make possible the full use of numerical forecasting models, allowing further improvements.

Better numerical weather forecasts will have a significant impact upon related fields, because model results are then used as inputs for hydrological, climatologic, agrometeorological, and pollutant transport models.

The super-computer is connected to a database storing system in order to process data. This entity, generically called *Data Storing Centre,* should be unitary and provide a simple and fast access to data: from numerical weather forecasting models to climatic studies and programs to access the national weather data fund.

At present, an ORACLE database system is used in storing data (only for surface observations across Romania). It particularly includes historical climatologic information which is validated before storing, this data type being the only rational database management system. Other data are stored in several computers, under various operating systems, on magnetic support.

The new storing system will provide a unitary data access and management. It will ensure a fast and direct access to every information type, for operational and researching activities, as well as for clients. In addition, considering the diversity of operating systems and data in present-day meteorology, the proposed project will provide capabilities to integrate these data into a unitary database system.

ANALYZING A POSSIBLE IMPACT UPON THE ENVIRONMENT

The climatologic component (modernizing the meteorological observations and measurements network) has no adverse or beneficial impact on the environment.

The agrometeorological component. As to this component, the proposed project has a positive impact upon the environment.

Properly applying the agrometeorological knowledge and information, including agrometeorological forecasts, will be of great help to the agricultural community in developing and operating sustained agricultural systems and will increase yields in a beneficial way as regards the environment.

The air quality sub-component will have a beneficial and significant impact upon the environment. More than any other system component, this sub-component aims to improve the statute of the atmospheric environment, working as a feed-back for polluting industries and describing the potential threats of pollutant emissions upon the environment. Using the system on extended national level, in the "hot" air quality points, is estimated to have a major impact on decreasing pollutant emissions, by warning polluting units in order to take proper steps when atmospheric conditions could affect air quality.

Local Environment Protection Agencies will directly benefit by these forecasts and, being legally capacitated when the environment faces such risks, it should be emphasized that they shall act as authorities in charge with discouraging high emission levels. When the proposed system becomes operational, polluting industries shall be pressed to invest part of their profit in the improving of technological processes so as polluting emissions could be significantly reduced.

Through the results of this component, situations when polluting agents could maintain that certain unfavourable atmospheric conditions explain the high air pollution concentrations will be solved.

The Super-computer and Database component has no adverse impact upon the environment, as far as the studies carried out in this field show. There is no potential threat to the environment, due to using computerized calculation techniques. An indirect benefit can still be mentioned, as the super-computer facilitates the use of several environment simulation models, including air quality and pollution ones, being capable to improve our capacity of monitoring, estimating, and forecasting potential threats to the environment.

TASK 6

CONSULTATIVE NATIONAL WORKSHOP FOR ASSESSING THE PROPOSAED METEOROLOGICAL SYSTEM AND SUBSYSTEMS

MINISTERUL MEDIULUI ŞI GOSPODĂRIRII APELOR
ADMINISTRATIA NATIONALĂ DE METEOROLOGIE R.A.
Şos. Bucureşti-Ploieşti 97, Bucureşti 013686, ROMÂNIA
Tel.: +40-21-316.31.16 Fax: +40-21-316.31.43
e-mail: relatii@meteo.inmh.ro http://www.inmh.ro

LIFE00 ENV/RO/000106 Project

Development of a monitoring and warning system for the impact of air pollution on the urban environment – AIR AWARE

Program of the LIFE-AIR AWARE Launching Conference 27 April 2007, Marriott Hotel – "TIMIŞOARA" hall

9.00 - 9.15	Welcoming and registration of participants	
9.15 – 9.30	Opening address on behalf of the National Meteorological Administration	**Dr. Ion SANDU** Director-General
9.30 -10.15	AIR AWARE project presentation Objectives. Estimated results	**Dr. Mihaela CAIAN** AIR AWARE Project Manager, NMA
10.15 – 10.45	Mesaj from central and local authorities regarding the project's usefulness and benefits	**Representatives of local and central authorities**
10.45 – 11.30	**Press conference / Coffee break**	
	Partners in AIR AWARE project and their role	
11.30 – 11.50	Presentation of the Bucharest Environment Protection Agency BEPA role as Partner in AIR AWARE project	**Carmen STUPARU** Executive-Director, Bucharest-EPA **Sanda PETRIŞOR** AIR AWARE Project Responsible
11.50 – 12.10	Presentation of the Urban and Metropolitan Planning Centre - Bucharest UMPCB role as Partner in AIR AWARE project	**Arh. Doina Marilena CIOCANEA** Director, UMPCB **Rodica GHEORGHE** AIR AWARE Project Responsible
12.10 – 12.30	Presentation of the Public Health Authority - Bucharest PHAB role as Partner in AIR AWARE project	**Director of PHAB...** **Dr. Maria NIŢESCU** AIR AWARE Project Responsible
12.30 – 12.50	Presentation of the Institute of Biology – the Romanian Academy IB role as Partner in AIR AWARE project	**Director of IB...** **Marilena ONETE** AIR AWARE Project Responsible
12.50 – 13.00	Presentation of METEO France METEO France as Partener in AIR AWARE project	**Eric BRUN** Research-Development Director **Joel POITEVIN** AIR AWARE Project Responsible
13.00 - 14.00	***Lunch break***	
14.00 – 14.30	Associates / Data suppliers in AIR AWARE project	**Representatives of the Industry & Health network**
14.30 – 14.45	International projects developed by the National Meteorological Administration Innovation.Results.Perspectives.	**Dr. Ion Victor PESCARU** Scientific Director, National Meteorological Administration
14.45 – 15.00	INTEROPERATE Project – necessity for a feasibility study concerning SIMIN development. Objectives.	**Dr. Gheorghe STĂNCĂLIE** Executive-Director, National Meteorological Administration **Ion POIANA** NSM Director National Meteorological Administration
15.00 – 15.20	INTEROPERATE – Feasibility Study. Components and Results	**Sinisa SIROVICA** **David PRITCHARD** Burgess&Niple experts - SUA
15.20 – 15.35	Meteo Database - important component in INTEROPERATE Project.	**Aurelian POPA** WinDigit
16.00 – 16.30	***Coffee break***	
16.30 – 17.30	Debates	
17.30 – 18.00	Conclusions	

LIFE AIR AWARE
LIFE05 ENV/RO/000106
AIR Pollution ImpAct Surveillance and WArning System for URban Environment
Proiect co-finantat de Uniunea Europeana
Programul LIFE-Mediu

LIFE-Mediu acorda sprijin financiar actiunilor demonstrative inovante ale activitatilor economice si autoritatilor locale, precum si actiunilor pregatitoare in vederea sprijinirii legislatiei si politicilor comunitare.
http://ec.europa.eu/environment/life/life/environment.htm

MINISTERUL MEDIULUI ŞI GOSPODĂRIRII APELOR
ADMINISTRATIA NAŢIONALĂ DE METEOROLOGIE R.A.
Şos. Bucureşti-Ploieşti 97, Bucureşti 013686, ROMÂNIA
Tel.: +40-21-316.31.16 Fax: +40-21-316.31.43
e-mail: relatii@meteo.inmh.ro http://www.inmh.ro

LIFE AIR AWARE

LIFE05 ENV/RO/000106
AIR Pollution ImpAct Surveillance and WArning System for URban Environment
Proiect co-finantat de Uniunea Europeana
Programul LIFE-Mediu

LIFE-Mediu acorda sprijin financiar acţiunilor demonstrative inovante ale activitatilor economice si autoritatilor locale, precum si actiunilor pregatitoare in vederea sprijinirii legislatiei si politicilor comunitare.
http://ec.europa.eu/environment/life/life/environment.htm

Interoperate
Slideshow Outline 4-07
D. Pritchard

Task 1
Assess the Existing Integrated System for Meteorological Surveillance Forecast, and Alert (SIMIN) in Romania,and Analyze Proposed Enhancements of 3 Subsystems (ISS-CLIMA, ISS-AGRO, ISS- AIR-POLUTE

and

Task 2
Propose Technical Solutions and Determine How Bust to Integrate the New and/or Enhanced Subsystems into the Existing SIMIN Infrastructure and to Implement the Required General Services

A – Initial Meeting and work plan

B - Model Usage for Existing and Future Conditions

Need to improve forecasts of severe weather events and achieve faster responses.

Models considered are ALADIN/AROME and COSMO/LMK models.

C – Numerical Weather Modeling in Romania – Current Situation

Now using ALADIN, HRM and MM5 models (Also LM ?)

(Summarize Each)

D – Future Plans for Numerical Weather Prediction

ALADIN Consortium (AROME)

COSMO (LMK Model)

WRF (Compared to old/MM5?)

E – Agricultural Models

Operational Models (SWB and CROPWAT)

Research Models

Soil Moisture Models

F – Database Management (Windigita)

Task 3
Computing Needs Assessment (MET-COMPUTE)

C. Assessment of Requirements and Current Capabilities
Computation Requirements, Data Storage Requirements
Current Capabilities

D – Proposed System

Task 4
Meteorological Training Needs Assessment
A – Background
B – Needs (Supercomputer, Databases)
C – Existing Courses
D – Training Assessment and Recommendations (Meteorology, IT)
E – Training Facility and Methods

Task 5
Conduct an Environmental, Developmental, and Regulatory Assessment of the Proposed INTEROPERATE Project.

INTEROPERATE

Meteorological Models and Computational Equipment Needs

INTEROPERATE Workshop

Presentation by: S. Sirovica, PE

D. Pritchard, PE

BURGESS & NIPLE

Bucharest, Romania

April 27, 2007

INTEROPERATE

- B & N INTEROPERATE TEAM:
  - Ohio Supercomputer Center
  - winDigita
  - Innovative Hydrology
  - 3-C Totalconsult

BURGESS & NIPLE

INTEROPERATE

Primary Project Goals:

- Assessing the Existing Integrated System for Meteorological Surveillance Forecast, and Alert System in Romania
- Analyzing Proposed Enhancements to the Forecast and Alert Systems

BURGESS & NIPLE

INTEROPERATE

GOALS

- ***Like for almost all National Meteorological Services, the main goal of ANM is the general improvement of the forecasts, especially for severe weather events.***
- ***Improved forecasts will provide a more accurate characterization of weather events (both in lead time, and magnitude).***

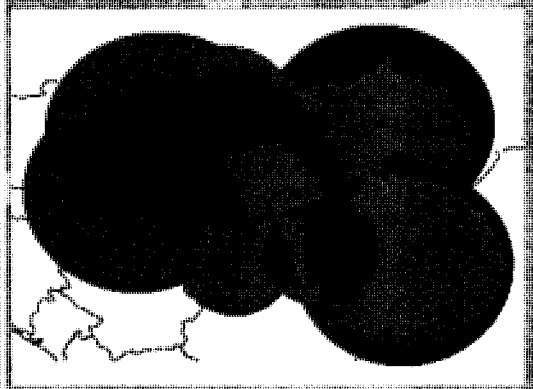

Radar national coverage in Romania

BURGESS & NIPLE

Assessment of Needs and Current Capabilities (MET-COMPUTE)

Computation Requirements

Data Storage Requirements

Operational Requirements

Current Capabilities

BURGESS & NIPLE

INTEROPERATE

Computation Requirements

MM5, WRF, ALADIN, LM, AROME – All require a system with high memory bandwidth between processor and main memory

BURGESS & NIPLE

INTEROPERATE

Data Storage Requirements

Computing data and imaging data must be stored. (Operational and Archival) Desire 30 days of operational data. Archival data may be permanent.

BURGESS & NIPLE

INTEROPERATE

Operational Requirements

Redundancy and fault tolerance are critical because of wide areas subject to flash flooding, where immediate, reliable products are essential

During periods of critical threats or system faults, research applications will be interruptible in favor of operations

BURGESS & NIPLE

INTEROPERATE

Current Capabilities

Sun E4500 w/8 processors; Generic Linux cluster of 28 processors. Have 1.2 Terrabytes online. Offline storage is varied, and need a hierarchical storage management system.

BURGESS & NIPLE

INTEROPERATE

RNMA Existing Data Storage Pools

Project	Current Capacity (GB)	Space Currently Used (GB)	Current Growth Rate (GB/month)	Projected Growth Rate (GB/month)
Climatological Database	50	15	0.5	2
Forecast Data	~50	~50	31	100
Radar Data	~604	~604	25.4	25.4
Satellite Data	500	~500	100-150	100-150

BURGESS & NIPLE

INTEROPERATE

REQUIRED TECHNICAL SOLUTIONS:

Develop Technical Solutions and Determine How Best to Integrate the New and/or Enhanced Subsystems into the Existing Infrastructure and to Implement the Required General Services

BURGESS & NIPLE

INTEROPERATE

- **Proposed System Specifications**
  - *Vendor Compiler Support*
  - *High Memory Bandwidth*
  - *Redundancy and Fault Tolerance*
  - *Operational Data Lifetime of 30 Days*
  - *Hierarchical Storage Management of Archival Data*

BURGESS & NIPLE

INTEROPERATE

Typical Compute Node Configurations

	Minimal	*Recommended*
Number of Compute Nodes	8	16
Processors per Compute Node	8	8
Compute Node Processor Speed	2.2 GHz	2.2 GHz
Memory per Compute Node	32 GB	32 GB
Compute Node Network Interfaces	2x Gigabit Ethernet	2x Gigabit Ethernet

Note: A system achieving equivalent performance with a configuration different from the above would be equally satisfactory

BURGESS & NIPLE

INTEROPERATE

Typical Service Node Configurations

	Minimal	*Recommended*
Number of Service Nodes	2	4
Processors per Service Node	16	16
Service Node Processor Speed	1.9 GHz	1.9 GHz
Memory per Service Node	32 GB	32 GB
Service Node Network Interfaces	2x Gigabit Ethernet, 4x 2 Gbit/s Fiber Channel	2x Gigabit Ethernet, 4x 2 Gbit/s Fiber Channel

Note: A system achieving equivalent performance with a configuration different from the above would be equally satisfactory

BURGESS & NIPLE

INTEROPERATE

TRAINING NEEDS ASSESSMENT:

- Infuse developing science and technology into existing operations
- Maintain level of expertise current with national and international research
- Enhance and stimulate staff learning
- Assure effective use of existing and new equipment

BURGESS & NIPLE

INTEROPERATE

Training Program Categories for IT:

- Supercomputer – for operators, administration, users and maintenance
- Databases – for database and OS administrators, users and operators

BURGESS & NIPLE

Training Program Categories for Meteorology:

- Climate Variability
- Convective Weather
- Emergency Management
- Hydrology/Flooding
- Mesoscale Meteorology*
- NWP (Modeling)
- Quantitative Precipitation Forecasting (QPF)
- Radar Meteorology and Nowcasting*
- Satellite Meteorology*
- Winter Weather
- Agro-Meteorology Modeling*
- Air Pollution Meteorology*

*Note - * indicates existing training program*

BURGESS & NIPLE

THE END

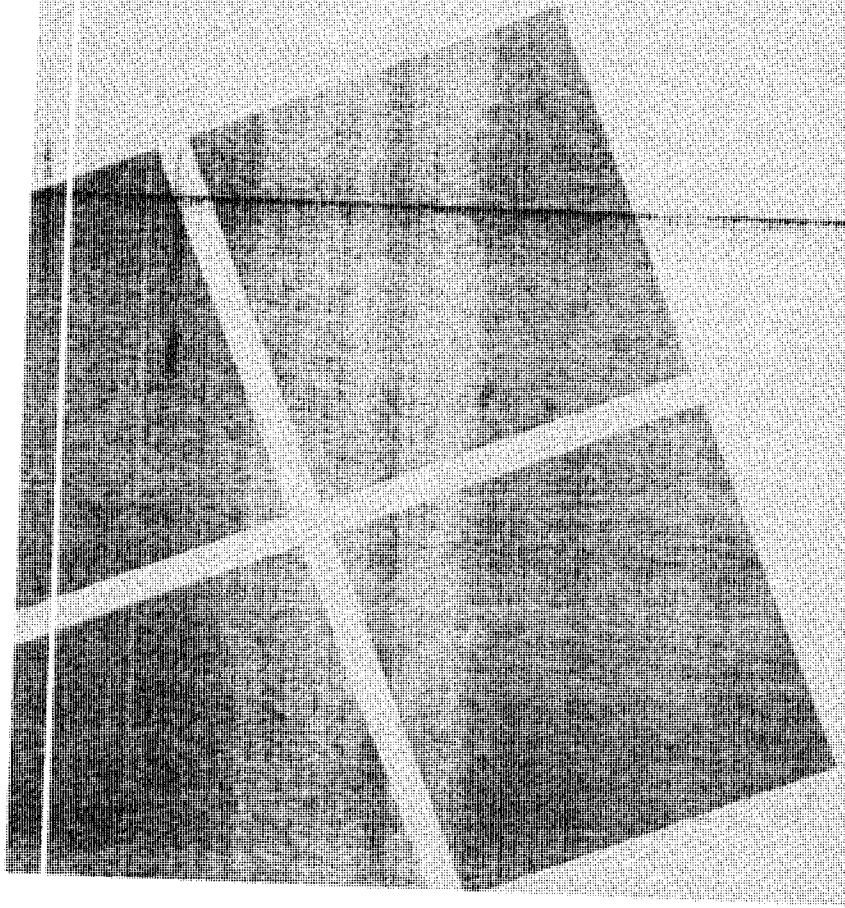

INTEROPERATE

Planned Processes and Products (very high resolution models – 2 to 3 km grids):

- AROME – Mesoscale model, non-hydrostatic with 2.5 – 3 km grid using 300 to 600 x the comp ability of ALADIN now
- COSMO Project (Local Model - LM) - tested at 2.8 & 7 km grid on generic LINUX cluster
- WRF – A non-hydrostatic mesoscale US model which is an improvement on the MM5 model of PSU

BURGESS & NIPLE

The INTEROPERATE Project
Necessity for a feasibility study concerning the SIMIN development

Gheorghe Stanoniu, Ion Petana, Elena Tomo
Doina Banciu, Bogdan Lutescu

Pollution Forecast and Warning, Computation and

- Since 2000, the RNMA (former NIMH) focused on implementing a new strategy to create a modern meteorological surveillance system, based on high technology. As such, the strategy has been initiated by two major investment Programmes: **SIMIN** (SIstem Meteorologic Integrat National) and **DESWAT** (DEStructive WATer Assessment and Control of Water Disasters).

- These two major programs have amounted to 55 Million USD and respectively 46 Million USD.

- The first RNMA investment project, SIMIN, addressed Romania's primary objective of modernizing and integrating the country's various resources and real-time detection capabilities, and also facilitated the exchange of data at the local, regional, and global levels.

- Within SIMIN, several systems with major significance have been provided:
  - Meteorological DOPPLER Radar Network – provided by Lockheed Martin and EEC;
  - Automatic Weather Network;
  - Lightning Detection Network;
  - Satellite Reception Stations for MSG;
  - Telecommunication Networks;
  - Visualisation System – Nex-REAP – integrating all available information.

- The project team successfully integrated state-of-the-art, commercial-off-the-shelf technologies and products building on Romania's existing meteorological infrastructure.

INTEGRATED METEOROLOGICAL SYSTEM

NMA

Operational ability

- Radar informatic and meteorological sensors integration
- Data automatic control and storage
- The latest software instruments
- Platforms of numerical modelling
- Short and long range forecast

ENVIRONMENT

Water management

- Meteo operational monitoring
- Climatic assessments & scenarios
- Extreme events anticipation

Public administration

- Parliament

DEFENCE

ASOC

- Operational data
- Searching rescue, NATO/PfP

INTERNAL

Civil protection

- Emergency information management
- Dangerous meteo. phenomena anticipatio
- Forestry/ technological fire detection
- Lightning detection and thunderstrike anti
- Landslide forecast

Lightning detectors

Automatic weather stations

Informatic networks

Forecasting centres

SIMI

Communication networ

Radar sensors

Hydrological buoyos

TRANSPORT

ROMATSA

OTHER USERS

- Energetics
- Telecommunication
- Civil construction
- Tourism
- Health

Society

AGRICULTURE

- Agro-meteo monitoring
- Vegetation state surveillance
- Agrometeorological and crop forecast
- Hail forecast, early warnings

NMA

•Operational transfer within WWW program, etc.

INTEROPERATE project

- The INTEROPERATE project should complete, upgrade and enhance the functionalities of the SIMIN project, add essential data processing capabilities to Romania's integrated management system for meteorology, and should develop ongoing training programs for professionals in this field.

- The most important objectives:
  - Modernization and enhancement of the observation and processing subsystems for climatology;
  - Modernization of the agro-meteorological monitoring and forecast processes, and integrating them into a national system;
  - Modernization of atmospheric pollution monitoring and forecast processes and integrating them into a national system;
  - Development of a national meteorological data processing and storage center, encompassing data from SIMIN, DESWAT, and WATMAN;
  - Development of an ongoing training program for meteorologists, agro-meteorologists, and environmental experts, with appropriate facilities.

INTEROPERATE project (cont.)

- For each of these objectives, the envisioned results will be obtained by developing a number of specific subsystems and components, - part of the overall Integrated National Meteorological System:
  - Integrated Support System for Climatology (**ISS-CLIMA**) (currently, only part of the meteorological network is supplied with automatic stations equipped with sensors for actual weather reports)
  - Integrated Support System for agro-meteorological forecast and warning (**ISS-AGRO**) (the system will identify specific risks to crops in precise areas, measurably improving agricultural productivity)
  - Integrated Support System for air pollution forecast and warning (**ISS-AIR-POLUTE**) (air quality monitoring and installation of warning systems are increasingly important for Romania's pollution 'hot spots')
  - National Meteorological Computing Center (**MET-COMPUTE**) (RNMA has considerable expertise in numerical weather prediction [NWP] which it is unable to capitalize on due to lack of processing power; the center will allow Romania to fully participate in the development of European models)
  - National Meteorological Training Center (**MET-TRAIN**) (as the Romanian education system in the meteorological domain has severe gaps, ongoing training programs are essential)

- RMNA elaborated a project proposal for U.S. Trade and Development Agency (USTDA) granting.

- The Grant Agreement was entered into between the Government of the U.S.A., acting through the U.S. Trade and Development Agency ("USTDA") and the Romanian National Meteorological Administration. USTDA agreed to provide the Grantee US$340,100 ("USTDA Grant") to fund the cost of goods and services required for a feasibility study on the proposed Integrated Climatology, Agro-Meteorological, Air Pollution Forecast and Warning, Computation and Training Center (INTEROPERATE) Project in Romania.

- Technical proposals have been solicited from interested and qualified U.S. firms.

- Selection of the U.S. Contractor have been carried out by the Grantee according to its established procedures for the competitive selection of contractors with advance notice of the procurement published online through *Federal Business Opportunities*.

- Burgess & Niple, Inc. (B&N) was awarded a contract (started on 30th of April 2005) to prepare the feasibility study, with assistance from subconsultants: Innovative Hydrology and The Ohio State University/Ohio Supercomputer Center of the United States, and 3CTotalConsult and WinDigita of Bucharest, Romania.

Terms of Reference

- The Romanian Government is currently attempting to implement an integrated management system for meteorology on a national level.
- The INTEROPERATE feasibility study seeks to build upon, complete, and integrate data from a series of previous initiatives [the National Integrated Meteorological System (SIMIN), the Destructive Waters Forecasting System (DESWAT), and the Integrated Water Resources Management System (WATMAN).
- Specifically the INTEROPERATE project would upgrade and enhance the existing SIMIN infrastructure, and would also add computing power, data storage capacities, and communications infrastructure in order to collect, integrate, and analyze data generated from the SIMIN, DESWAT, and WATMAN projects, increasing the effectiveness and benefits of all three.
- The INTEROPERATE project seeks to form the core element of Romania's planned National Crisis Management System.

Termes of References

- **Task 1:** Assess the existing integrated system for meteorological surveillance, forecast, and alert (SIMIN) in Romania, and analyze proposed enhancements of three main subsystems (ISS-CLIMA, ISS-AGRO, ISS-AIR-POLUTE).
  - **Deliverable** : A report containing an overview of the existing meteorological surveillance system as well as observations and conclusions on the three sub-systems analyzed.
- The equipment to be procured under Task 1:
  - Sensors for present weather - compatible with the existing automatic stations.
  - Mobile automatic weather station for agro-meteorology.
  - Background air pollution measurement station

- **Task 2**: Propose technical solutions and determine how best to integrate the new and/or enhanced subsystems into the existing SIMIN infrastructure and to implement the required general services.
  - **Deliverable for Task 2**: A report containing recommendations and technical solutions for an enhanced integrated meteorological surveillance system, with separate sections for each of the three sub-systems and the required general services is required for Task 2.
- **Task 3:** Computing needs assessment (MET-COMPUTE)
  - **Deliverable for Task 3:** A report containing recommendations and technical solutions for the most appropriate High Performance Computing System as well as for an optimal data processing and storage facility for the RNMA's needs and capacities.
- **Task 4**: Meteorological training needs assessment (MET-TRAIN)
  - **Deliverable for Task 4:** A report containing hands-on training to RNMA staff on the proposed integrated meteorological surveillance system, including the data processing and storage component.

- **Task 5**: Conduct an environmental, developmental, and regulatory assessment of the proposed INTEROPERATE project
  - **Deliverable for Task 5:** A report containing a review of the Project's environmental impact upon implementation and any effect it will have on residents in affected areas.
- **Task 6**: Organize a consultative national workshop for assessing the proposed meteorological system and subsystems.
- **Task 7**: Assess the required equipment and associated investments for the INTEROPERATE project, and develop a phased implementation plan.
- **Deliverable for Task 7:** Assessment of the system's requirements for data and equipment, including measurement, data transmission, collection, storage, and processing.
- **Task 8**: Prepare a Final Report

❑ Atmospheric Models

- meso-scale numerical weather prediction models
- ensemble prediction system (very poor)
- climatic regional models
- trajectory models
- statistical adaptation models

Require very high computing power

❑ Wave and Sea Circulation Models

❑ Air Quality Models

❑ Agro-meteorological Models

❑ Snow Layer Evolution Prediction Models

computing platform – present state

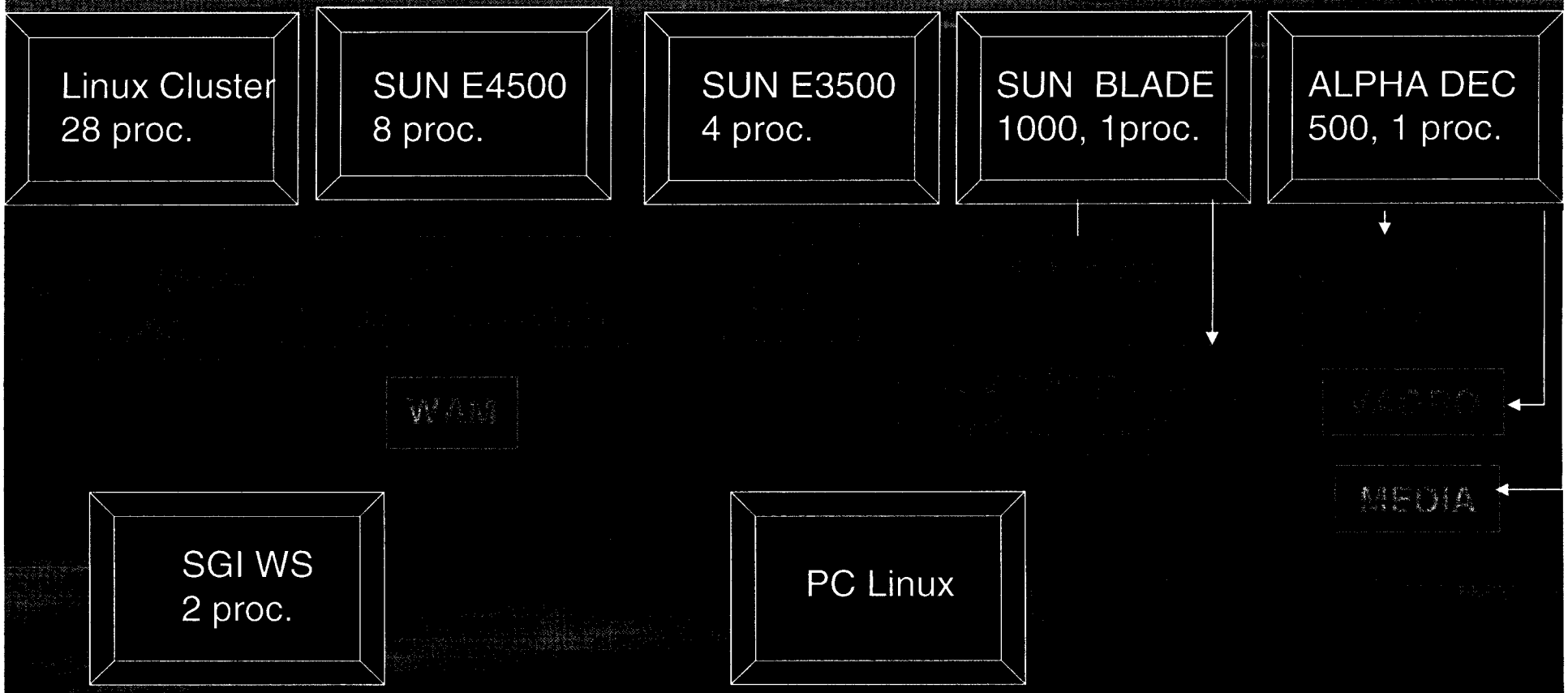

- mainly for atmospheric models -

Numerical modelling RNMA objectives

- General improvement of weather forecast
- Special emphasis on severe weather forecast
- Better response to environmental accidents

National Meteorological Administration
- atmospheric models needs -

computing system solution

- Comply to the present and near future needs for:
  - ✓ the forecast system accordingly to the operational time schedule
  - ✓ research and development activities

Forecast Production Schedule

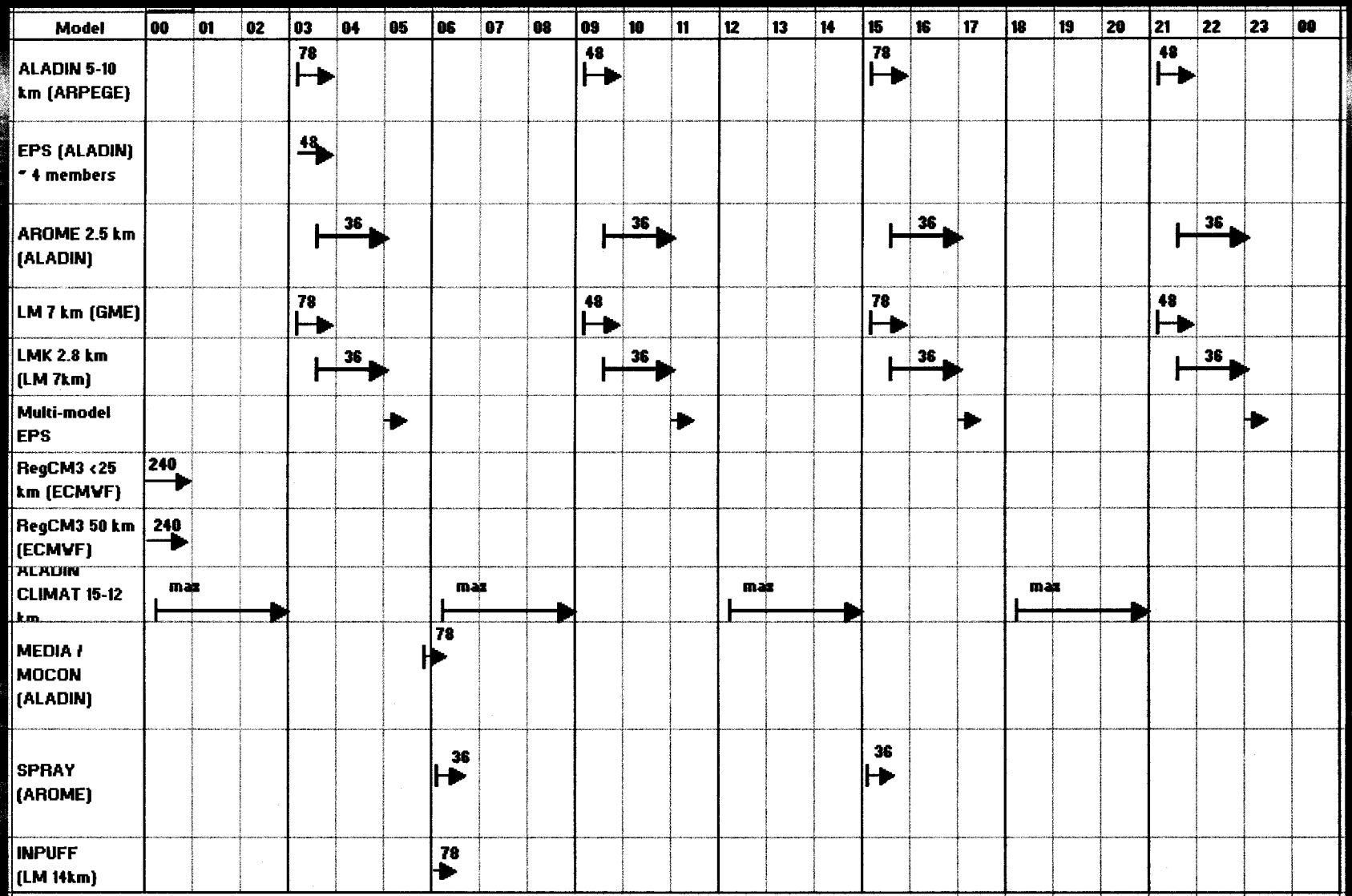

Types of structured data

- **"National Surface" observation data** collected at the Regional Centres from observation stations. At the Regional Centres data files are transferred to Bucharest through the Communication Gateway, stored in MS SQL Server and then stored in the Oracle "Climatological" database.

- **"Vertical atmospheric data profiles"** collected from radiosounding stations.

- **Radar data** collected from eight radars and there is a need to capture data from NEXRAD format.

- **Satellite data** – RNMA receive in real time manner numerical data and images transmitted by geostationary meteorological satellites (MSG1 – first METEOSAT of the second generation; METEOSAT-7), NOAA/AVHRR satellites and EPS satellites.

- **National network of electrical discharges (SAFIR)** – International surface and upper air data is stored in a collection of files in alphanumeric format.

Types of Structured Data

- **Models Output** – All the output of the models is partially stored on DVDs or CDs. RNMA personnel of every department consumes time with this activity (burning the media, labelling and archiving the DVDs/CDs)

- **GIS Data** – the existing GIS information are categorized on interest fields, represented on several scales (1:5000, 1:25000, 1:50000), containing diverse information (hydrological network, road network, railways network, cities, use/covering of lands/fields, hidrotechnical constructions, numerical model of lands/fields). The storage of information (e.g. shapefiles) is on CDs. Current licenses of RNMA for GIS package don't permit access to meteorological parameters stored in RDBMSes.

- **International Data** – from GTS.

Existing Database System

Now, our organization have two databases, that continent only operational and historical National Surface Observation Data:

- **Oracle Climatological Database**
- **Ms SQL Server - National Operational Collection Database**

The next slide shows databases used inside NMA and data flows for these.

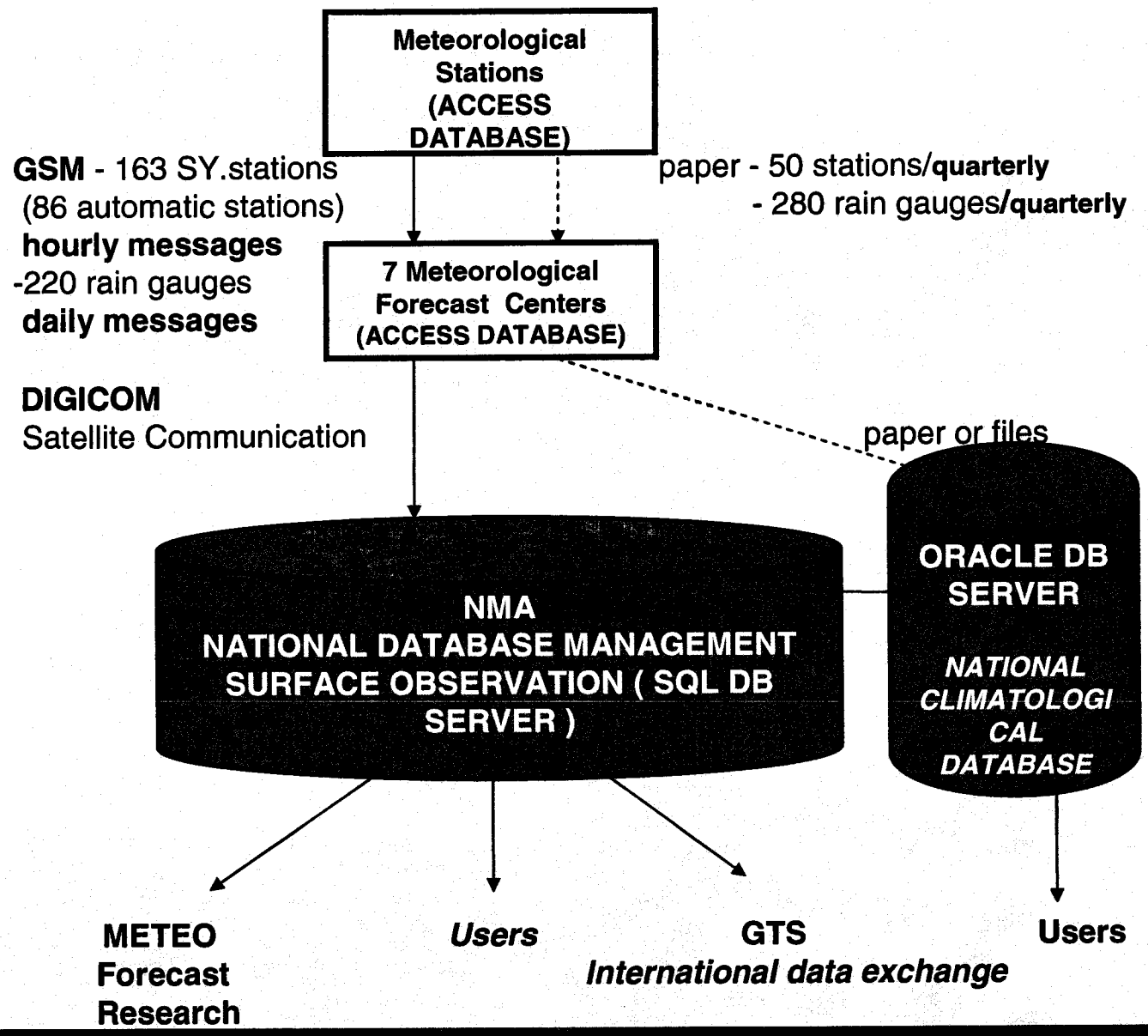
Meteorological Stations (ACCESS DATABASE)
GSM - 163 SY.stations
(86 automatic stations)
hourly messages
-220 rain gauges
daily messages
paper - 50 stations/quarterly
- 280 rain gauges/quarterly
7 Meteorological Forecast Centers (ACCESS DATABASE)
DIGICOM
Satellite Communication
paper or files
NMA
NATIONAL DATABASE MANAGEMENT
SURFACE OBSERVATION (SQL DB SERVER)
ORACLE DB SERVER
NATIONAL CLIMATOLOGICAL DATABASE
METEO
Forecast
Research
Users
GTS
International data exchange
Users

Objectives

All types of structured data must be managed in binary format (GRIB, BUFR, etc ...) using a operational meteorological database ROMDB (Romanian Operational Meteorological Database) which must be integrated with HPC's storage solution.

- The present data acquisition system should be upgraded to accommodate faster and more reliable data collection from the branch offices, using the newest technology on the market and with no changes to the existing SOP applications.

- On-line access to all the data gathered at the ANM HQ: satellite data, radar data etc ... which should be stored and managed by means of the operational meteorological database (ROMBD).

Objectives - 2

- Integration of the future ROMDB and existing Climatological Database with a GIS solution (GIS server) that should also use the existing GIS data. The format of existing GIS data is ESRI specific.

- Upgrade of the Oracle DB Server which stores the Climatological Database (there is a need for extending the storage capacity and the processing capacity) in order to accommodate with the GIS Data.

The next slide presents a high-level diagram of the future system. Existing databases/elements are orange.

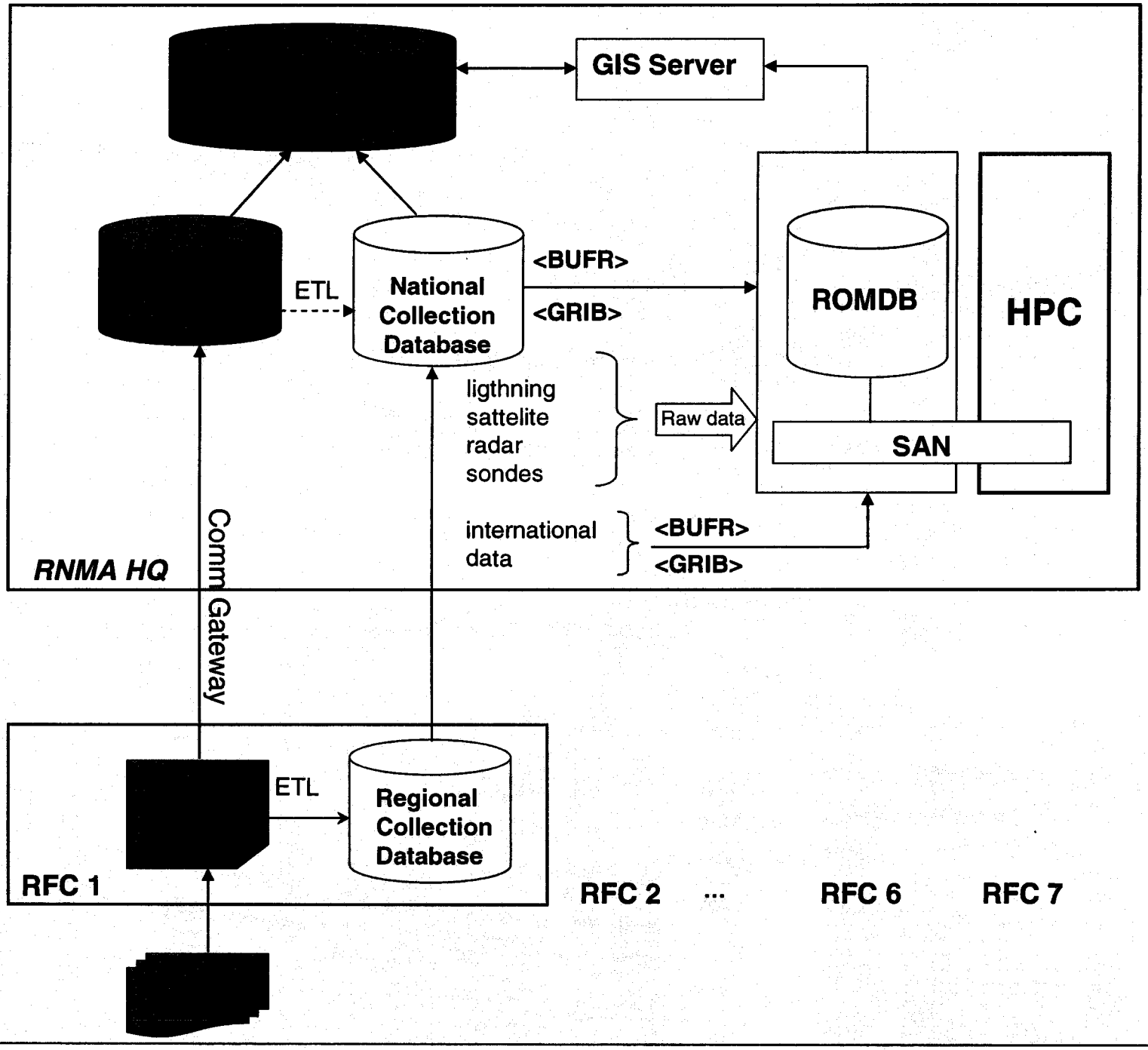
GIS Server
ETL
National Collection Database
<BUFR>
<GRIB>
ROMDB
HPC
ligthning
sattelite
radar
sondes
Raw data
SAN
international data
<BUFR>
<GRIB>
RNMA HQ
Comm Gateway
ETL
Regional Collection Database
RFC 1
RFC 2
...
RFC 6
RFC 7

DUV Open-Path Gas Analyzer

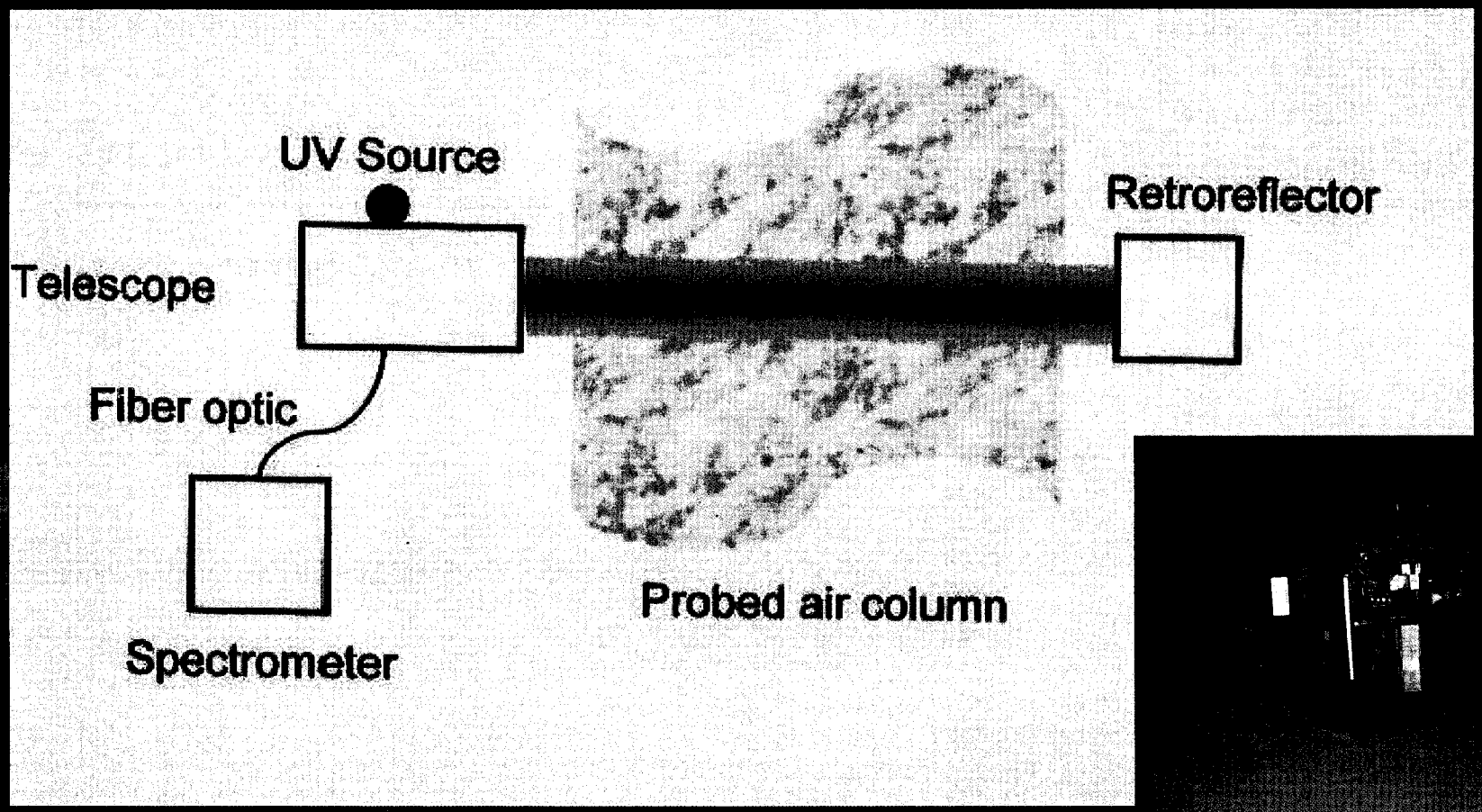

Vaisala PWD22

Present Weather Detector + MAWS 110

Vaisala PWD22

Measured data:

2007-04-24, 11:32:02,VALID,┌PW 1┐ 00 20000 20000 C 0 0 0 0.00 52.28 131└
,VALID,13.6368,

2007-04-24, 11:33:02,VALID,┌PW 1┐ 00 20000 20000 C 0 0 0 0.00 52.28 131└
,VALID,13.6368,

2007-04-24, 11:34:02,VALID,┌PW 1┐ 00 20000 20000 C 0 0 0 0.00 52.28 131└
,VALID,13.6368,

2007-04-24, 11:35:02,VALID,┌PW 1┐ 00 20000 20000 C 0 0 0 0.00 52.28 131└
,VALID,13.6368,

2007-04-24, 11:36:02,VALID,┌PW 1┐ 00 20000 20000 C 0 0 0 0.00 52.28 131└
,VALID,13.6368,

Remote AWS

Campbell Scientific CR1000 Used in the Experiment

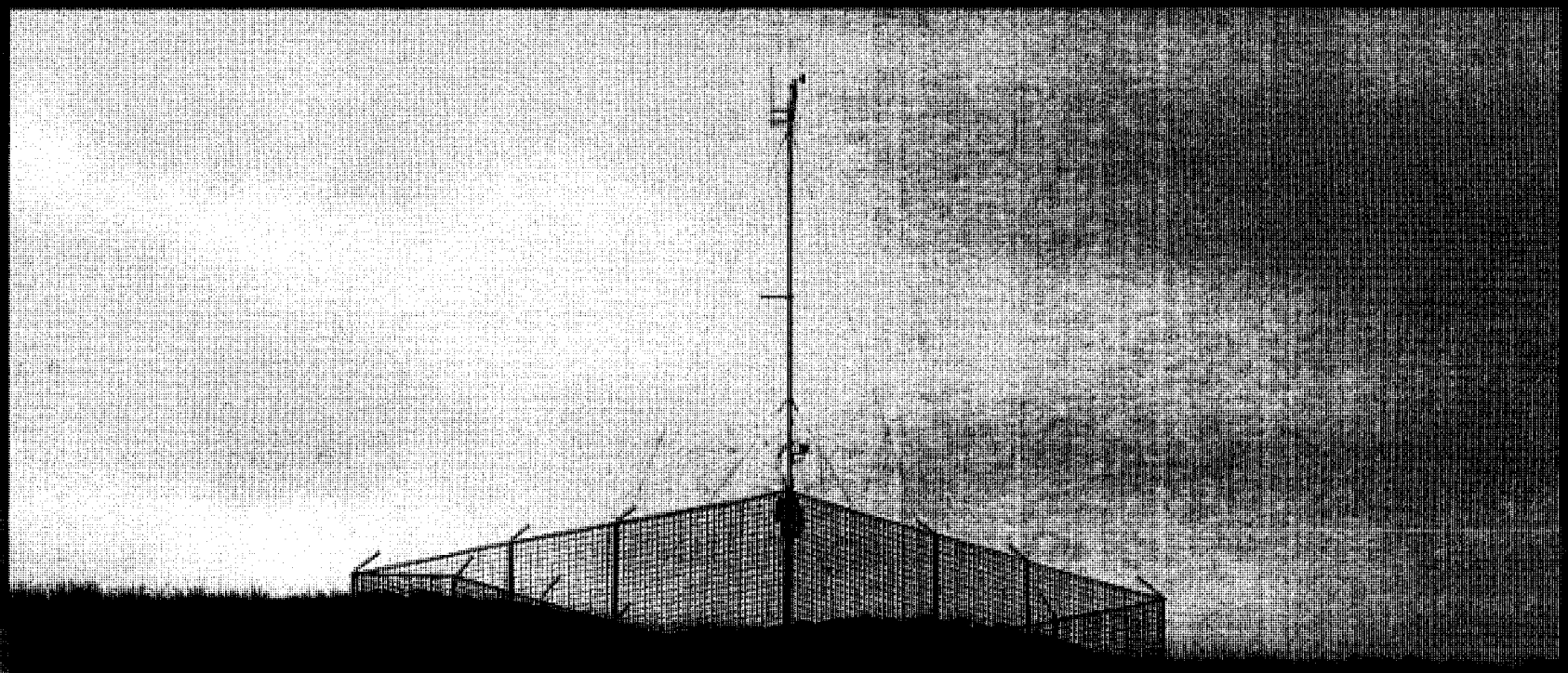

Remote AWS

Measured data: Air Pressure

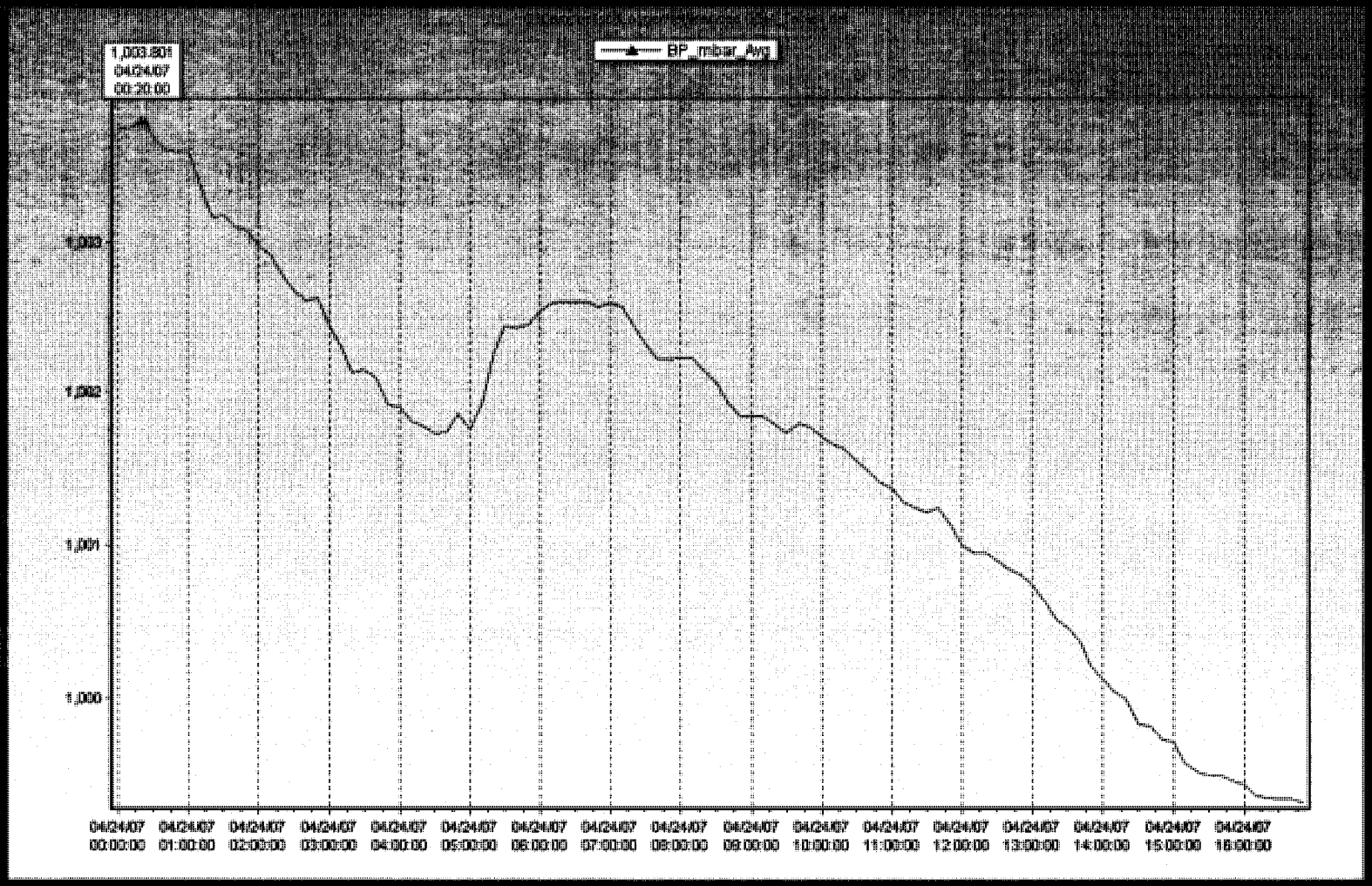

Remote AWS

Measured Data: Air Temperature and Relative Humidity

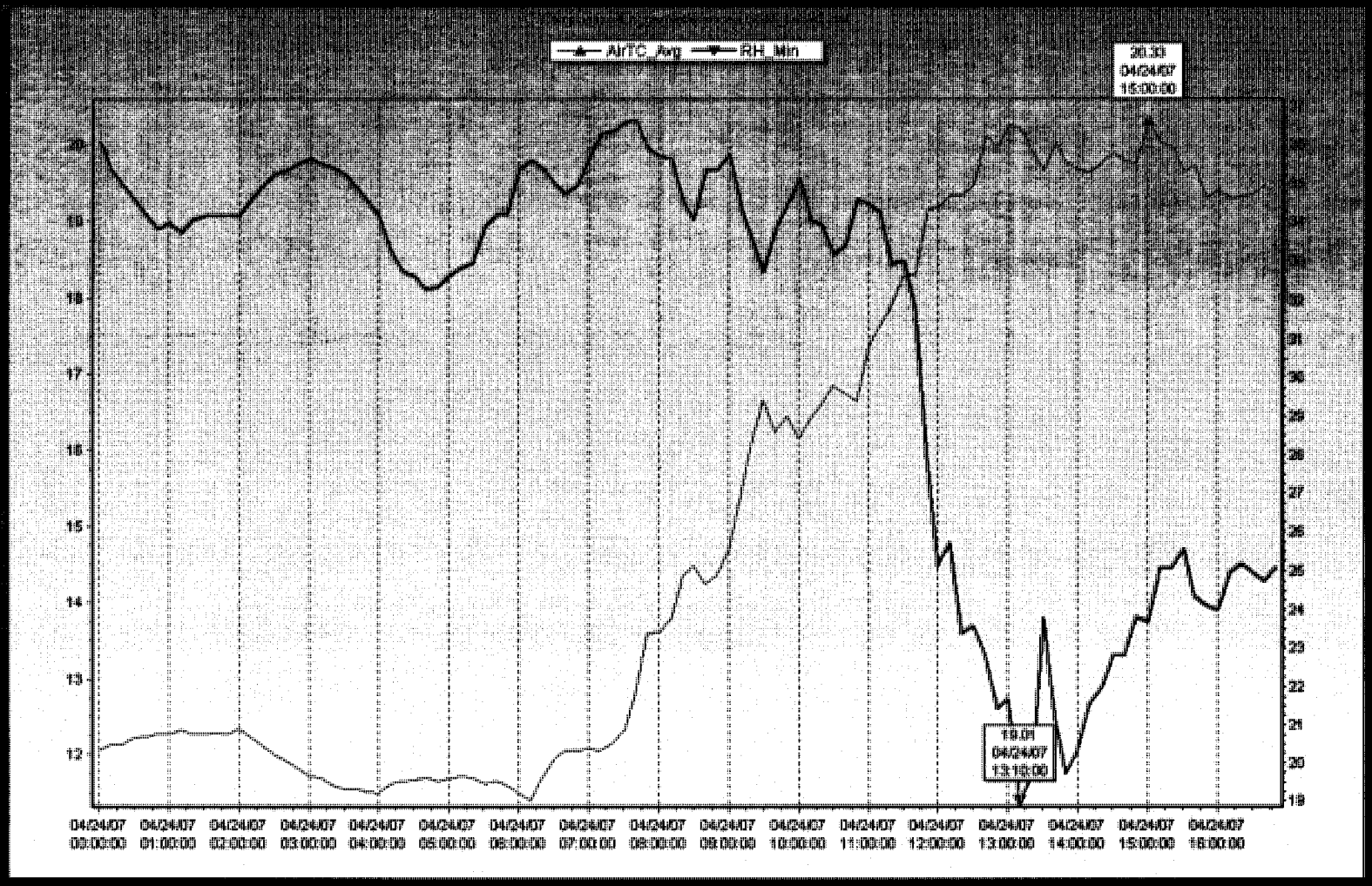

Measured data: Wind Speed and Direction

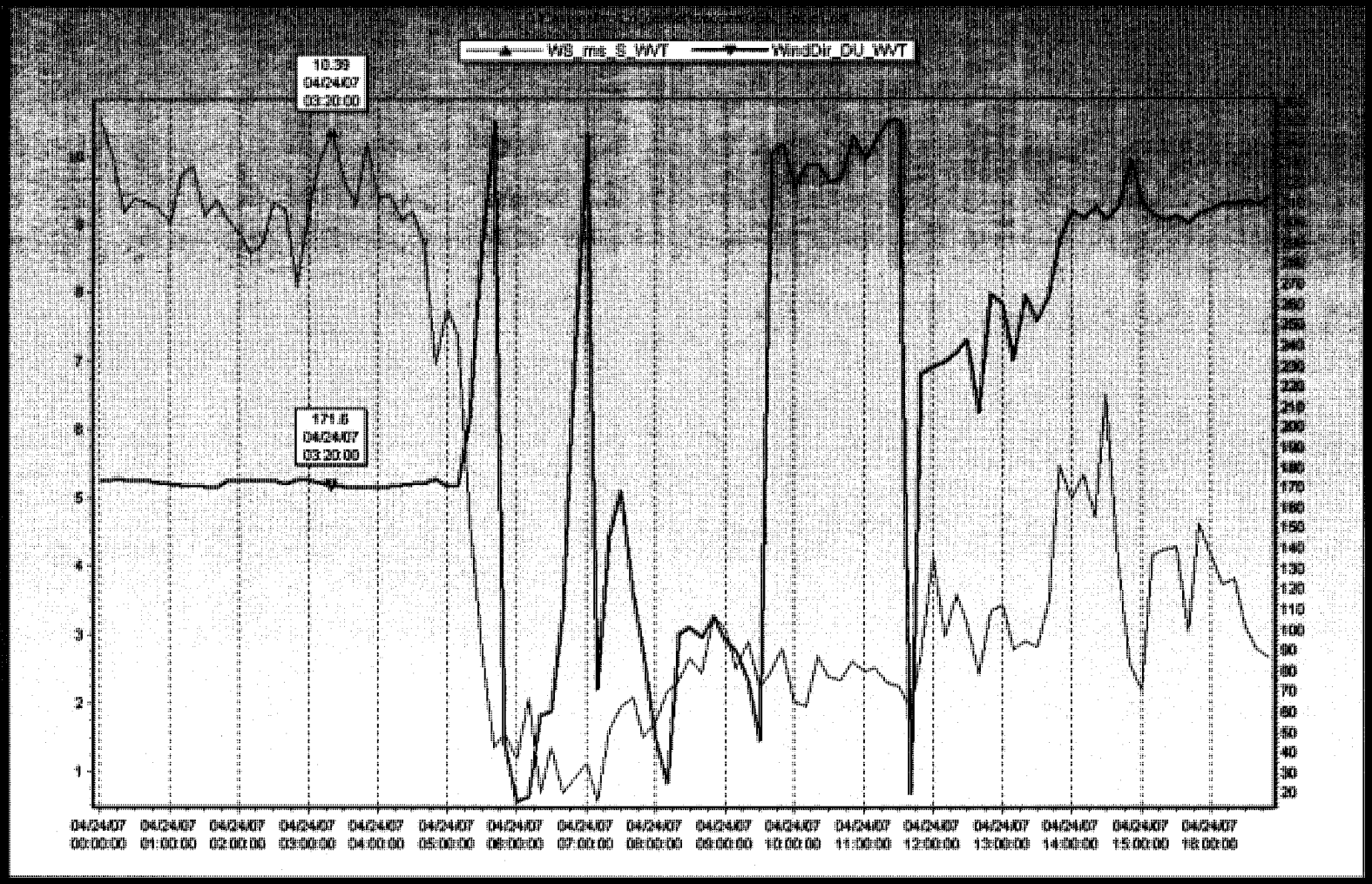

Romanian Operational Meteorological Database

Aurelian.POPA@winDigita.com
0722 21 21 01
www.winDigita.com

Agenda

- Existing System
- Requirements
- Human resources needs
- Transitioning system
- New system
- Conclusions
- Q&A

Existing System

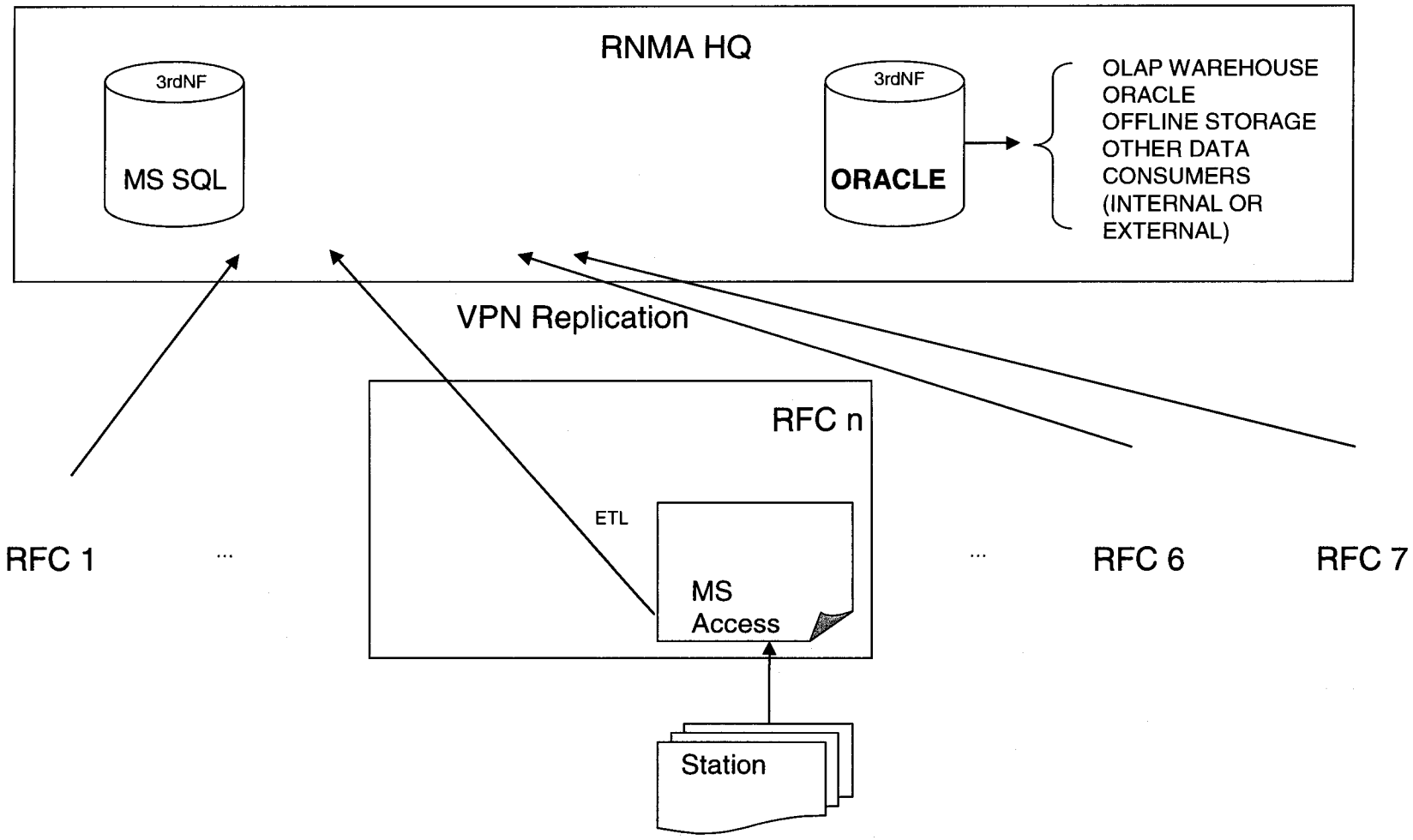

New system – requirements

- 3rd Normal Form (3rdNF)
- 2PC transactions and concurency
- GIS capable
- Auto-manageability, scalability, agility, Interoperability, integration, high availability
- N-tier
- SOA

Other requirements

- Developement Tools (RAD)
- inside database engine at least one runtime of a major language (C#/Java/VB/J#/etc.) running <u>in-process</u> (not out-of-process)
- OLTP vs OLAP
- Conversion tools (ETL)
- Updating policies (SPs, Quickfixes, security patches) and costs

Human resources

- Periodical training
  - 10-15% total working time (excluding holidays and vacations)
- Periodical internal meetings
  - Workshops, syncronisations, etc
- Industry recognized certifications
  - DBA certifications, examinations

Licensing and prices

- Editions and add-ons
- Per processors vs per core licensing
- Maintenance costs
- Total cost of ownership

Existing System

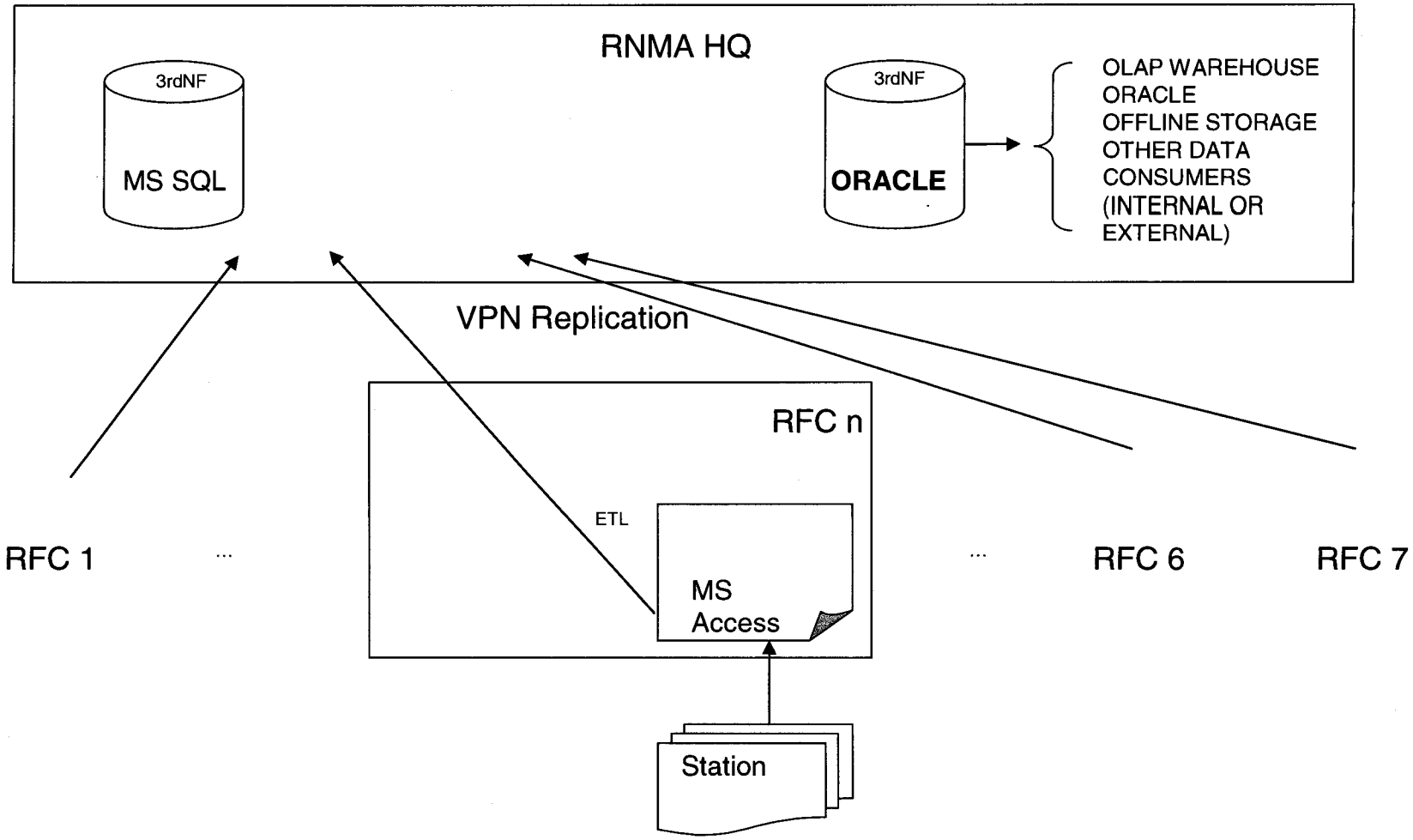

Transitioning System

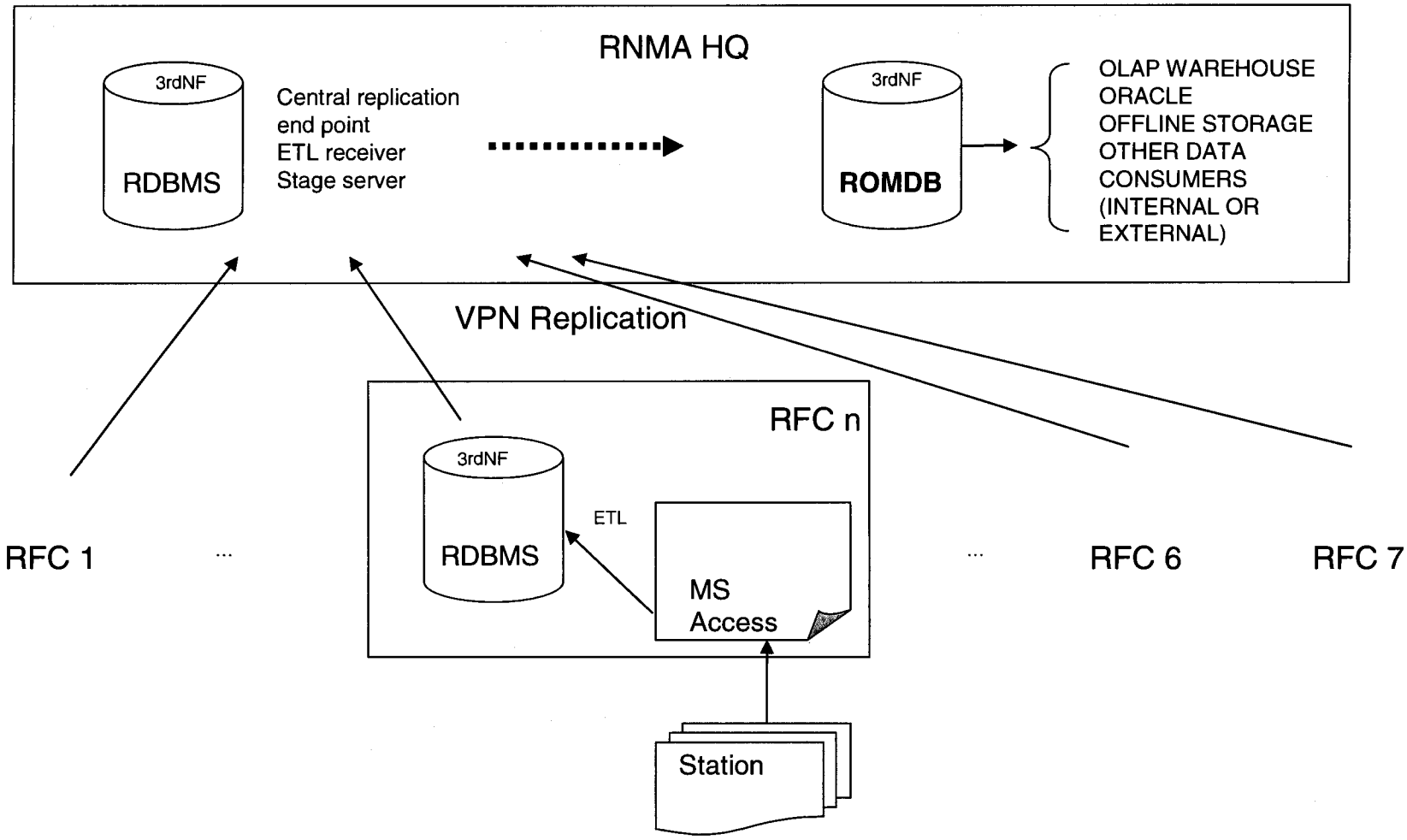

New System

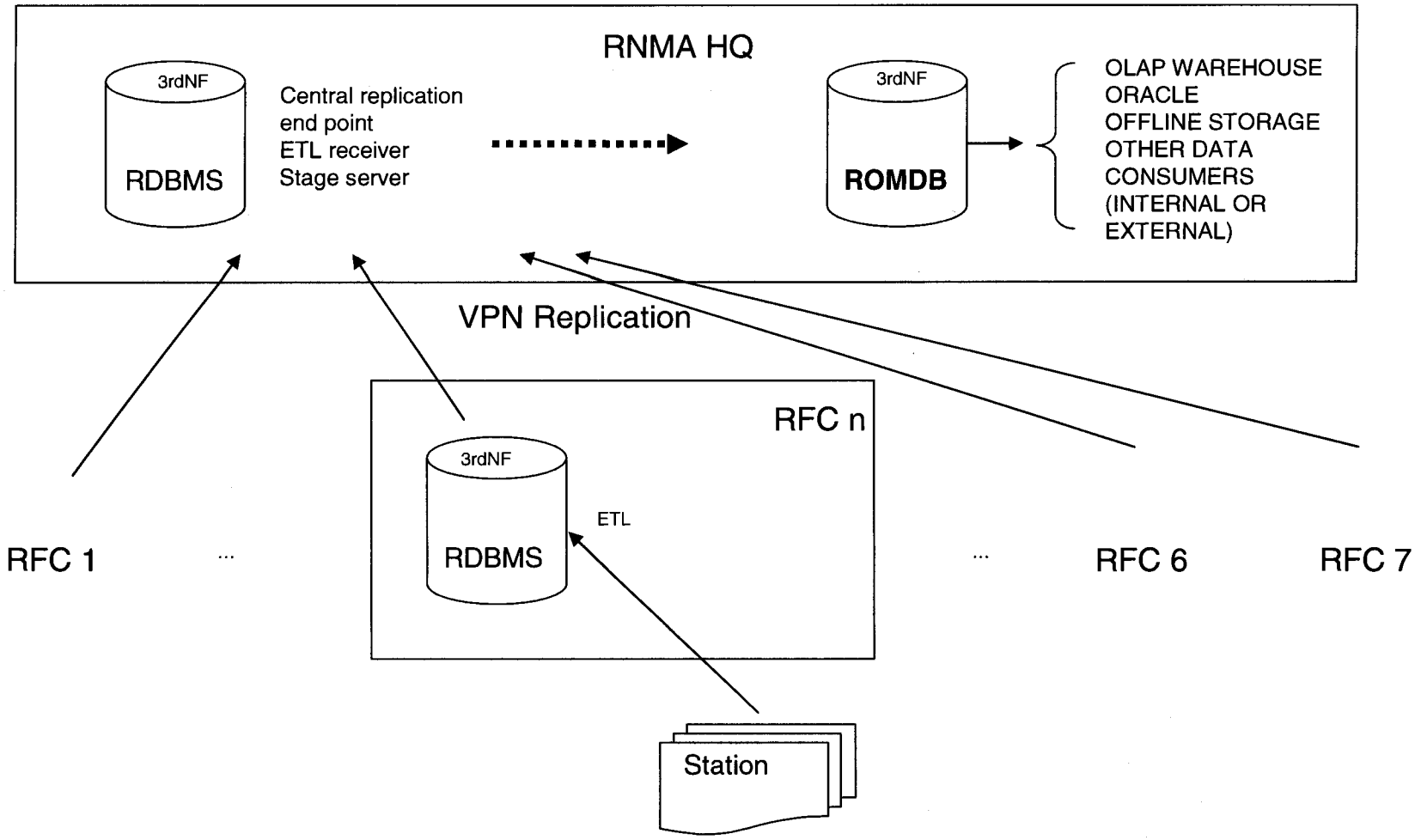
RNMA HQ
3rdNF
RDBMS
Central replication
end point
ETL receiver
Stage server
3rdNF
ROMDB
OLAP WAREHOUSE
ORACLE
OFFLINE STORAGE
OTHER DATA
CONSUMERS
(INTERNAL OR
EXTERNAL)
VPN Replication
RFC n
3rdNF
RDBMS
ETL
RFC 1
...
...
RFC 6
RFC 7
Station

Conclusions

- Upgrade of the regional Access data repositories to a robust 2PC flavor of RDBMS
- the implementation of a replication mechanism via existing VPN.
- Central location needs a failover configuration
- Insufficient human resources (additional training is required for existing staff)
- Criteria : price, easy of use and administer, easy to upgrade and availability of DBA's.
- Migration effort should be minimized choosing the right database solution

Conclusions

- Central and regional locations must be consolidated and should have a common schema in a unified database both in terms of database platform and database entity relationship management
- The replication of the data will transfer data around this distributed system in order to make available all the needed data at the corresponding level.
- "Romanian Operational Meteorological Database" (ROMDB) is an important step in RNMA's strategy regarding database services.

Q&A

TASK 7

ASSESS THE REQUIRED EQUIPMENT AND ASSOCIATED INVESTMENTS FOR THE INTEROPERATE PROJECT, AND DEVELOP A PHASED IMPLEMENTATION PLAN

SECTION VII (TASK 7) – ASSESS THE REQUIRED EQUIPMENT AND ASSOCIATED INVESTMENTS FOR THE INTEROPERATE PROJECT, AND DEVELOP A PHASED IMPLEMENTATION PLAN.

A – Assessment of the system's requirements for data and equipment including measurement, data transmission, collection, storage and processing; an inventory of the required equipment, software, procedures and training; and cost estimates.

General

The proposal for improvements in the meteorological system in Romania under the direction of RNMA includes the components evaluated and selected in the preceding sections of this report: the high performance computer, the data management system, and the sensors.

Implementation requirements have been identified and associated costs for the INTEROPERATE system have been estimated based on quotations by prospective vendors and industry sources. The relevant sections of the report provide detailed lists of system requirements, both hardware and software for the various components: computers, data storage, sensors, power supply and communication equipment. Details of the cost estimate are provided in at the end of this section. A summary description and tabulation of the recommended program ant its costs are provided below.

High Performance Computing Facility

The recommended High Performance Computing Facility is based on the IBM Power5+ model 575 computer, or equipment with equivalent capabilities and support. It allows expansion in a building block configuration, with high bandwidth and 100.5 gigabytes per second in benchmark operation. Two options are provided as a minimum (8 processors) or recommended (16 processors) depending on the available budget. It includes appropriately configured Compute Nodes and Service Nodes. Necessary software is included.

The recommended system includes the required storage infrastructure, primarily disk controllers using Fibre Channel disks and a tape library system. Disk storage of 4 TB is the minimum and 16-20 TB is recommended. Redundancy is provided in both the computing and storage systems that are proposed herein.

Operation and maintenance cost estimates are provided, based on typical expenditures as a percentage of system initial cost.

The estimated cost for the recommended configuration is $2,265,000 with an annual cost estimated at $453,000; and for the minimal configuration at $1,300,000 with an annual cost of $260,000, with the annual cost based on typical percentages of the initial cost.

Relational Database Management Systems

In selecting data management systems, integration and cost are important and possibly conflicting criteria. IBM DB2 would integrate better with the supercomputing system but carries a relatively high cost. Microsoft SQL Server 2005 is a robust solution that can be implemented at reasonable costs for RNMA. If the key factor is the price then MS SQL is the best option. However, if the key factor here is the level of integration and the supercomputing system is IBM-based then the best option is IBM DB2. Also, RNMA needs to invest more on training and education on the human resources side.

Following is the Microsoft-based specification for a data management system, with options for a Minimum and a Recommended level of investment, with estimated costs.

	Minimum	Recommended
RNMA HQ central replication endpoint	1 node RAID 5, 10000 rpm, 8 MB cache, HDD Node Configuration: 1 processor 3 GHz 2 GB RAM	2 nodes RAID 5, >10000 rpm, 16 Mb cache HDD Node Configuration: 2 processors 4 GHz 4 GB RAM
RNMA HQ hot backup server	1 processor 3 GHz RAID 5, 10000 rpm, 8 MB cache, HDD 2 GB RAM	2 processors 4 GHz RAID 5, >10000 rpm, 16 Mb cache HDD 4 GB RAM
RNMS RFC servers (7 servers)	1 processor 3 GHz 1 GB RAM	1 dual-core proc 3 GHz 2 GB RAM
Hardware Cost	$23,000	$27,000
Software Cost	$64,170	$64,170
Total Cost	**$22,750**	**$22,750**
Training Cost - Annual	$1,800	$1,800
Staffing Cost - Annual	$22,750	$22,750
Total Cost - Annual	**$24,550**	**$24,550**

Sensor Systems

The sensor systems required to support the INTEROPERATE program, and the specific products selected for testing in the pilot application are as follows:

1 – Present Weather Sensor- Vaisala PWD22 -20 units at a total cost of:	$315,542.
2 – Soil Moisture Probe - Campbell Scientific CS616 – 10 units at a total cost of	$48,252.
3 – Automatic/portable Weather Station – Campbell Scientific custom – 50 units (7 mobile) at a total cost of:	$469,799.
4 – Tethersonde - Vaisala DigiCORA - three units at a total cost of	$248,913
5 – Air Pollution Monitor - Air Instruments and Measurements AIM 8500 – one unit at a cost of:	$43,073.
Total cost for all selected sensing and monitoring equipment:	$1,129,489
Total cost with 20% contingency and design:	$1,355,387.

Total System Cost Estimate

Total estimated initial costs of the system desired by RNMA range from $2,743,000 for the minimal system, to $3,712,000 for the recommended system. Added estimated annual operating costs range from $420,000 for the minimum to $613,000 for the recommended program. These represent overall annual costs in the range of $1.0 million to $1.4 million, assuming a 6-year average life for the investment and a 6% interest rate on capital recovery.

			Minimum Facility		Recommended Facility	
			Total Cost	***Annual Cost***	***Total Cost***	***Annual Cost***
TOTAL, All Costs	Sensors, Computer, RDBM		$2,743,445	$420,089	$3,711,557	$613,089
Amortized Cost	6-yr life at 6% interest:		$556,919		$753,446	
TOTAL Annual Cost				$977,008		$1,366,535

B – Analyze available suppliers of the configurations recommended above.

The equipment proposed is available from a variety of US and non-US suppliers. The equipment selected for the sensor pilot demonstration applications was considered the best available at an appropriate price. To-date, the equipment used in the pilot has been satisfactory and may properly be used in the system as it is developed. The sensors selected for the pilot are as noted above.

For the High Performance Computing Facility, IBM equipment is considered the best suited, based on its wide application in meteorological services around the world, and resulting capabilities of support organizations within the manufacturer's system. However, othjer suppliers may meet the technical performance requirements as follows:

1. IBM Power 5+ 575
2. Cray X-1
3. Fujitsu VPP 5000
4. SGI Altix
5. Sun E25k

For the RDBM, there is an advantage in using equipment of the same manufacturer as the primary high performance computer system, especially if the primary equipment is IBM. Potential suppliers are:

1. IBM
2. Cray
3. SGI (Silicon Graphics Incorporated)
4. HP (Hewlett Packard)

C – The estimated cost-effectiveness of the proposed system

The damage, risk, loss of life and inefficient use of water resources that are now experienced by the citizens and businesses of Romania are significant reasons for social

concern and causes of economic losses in all regions of the country. Section V of this report provides details as to the ongoing damages resulting from weather events in Romania. Improved prediction, especially the more rapid and detailed information that will result from the investments proposed in the INTEROPERATE system, can mitigate or eliminate some of this adverse social and economic loss. In summary, the more severe effects in a recent year (2005), are reported as follows:

Flooding damage in Romania for the calendar year 2005

Locations affected:	1734
Number of weather-related deaths	76
Estimated cost of damage	EU 1.7 Bil ($1.2Bil)
Households damaged	93,976
Businesses damaged	1063
Agricultural area damaged	656,392 Ha
Roadways of all types damaged or destroyed	15,500 km
Bridges and culverts damaged or destroyed	913
Railway damaged or destroyed	24km
Flood control structures damaged or destroyed	630

The geographic effect included all counties in Romania, as well as the many economic and social sectors depending on the facilities noted above as being damaged or destroyed by flooding and other weather-related occurrences.

With overall annual costs as noted above in the range of $1.0 million to $1.4 million, a significantly greater economic benefit should be expected if the investment in the improved meteorological system is to be considered viable. The investment will certainly result in better predictions of weather, pollution and agricultural conditions. This improved information can contribute to a higher standard of living and greater national gross domestic product for Romania in many ways, including predictability of high risk weather events, reduced commercial losses, avoiding injury and loss of life, and planning for outdoor operations such as construction, air transport, recreation and agriculture. Most of these are difficult or impossible to quantify, but agricultural production may be the easiest to measure. With a an agricultural sector in Romania of over 10% of the economy, or about $12 billion per year, higher yields from better water management can easily exceed the entire cost of the proposed meteorological investment. For instance, even an improvement of 0.1% in agricultural production attributable to better forecasting would equal $12 million per year, or a benefit-cost ratio of about 10 to 1, certainly justifying the investment. The more likely scenario is that better analysis of ground moisture conditions and better weather forecasting that will follow from this investment could increase agricultural production by several percentage points, with a resulting benefit-cost-ratio that could be 100 to 1 or greater. This ignores the benefits in the more general categories of risk reduction noted earlier that come with better weather forecasting, but just the potential for improved agricultural output more than justifies the investment based on agriculture potential alone.

D – Implementation Schedule

The implementation schedule can be relatively short as no major construction or environmental disruption is involved in implementing the plan. The RNMA has completed renovation and adaptation of an existing building in the RNMA compound in Bucharest to accommodate the new computers. This includes a 60 square meter room with a false floor and ceiling for wiring, and a standby electric generator.

Based on the above, bidding and/or negotiation for equipment acquisition can be undertaken in 2008 and the entire program can be implemented in 2009.

Implementation Schedule for INTEROPERATE Project

Completion of computer housing facility	June	2008
Review and acceptance of study results	May – June	2008
Issue/response for computer tender notice	June – August	2008
Issue/response for sensor tender notice	Sept – Nov	2008
Issue/response for RDBM tender notice	Sept – Nov	2008
Award of computer purchase contract	Jan	2009
Award of sensor purchase contract	Jan	2009
Award of RDBM purchase contract	Jan	2009
Installation of computer and ancillary equipment	June-Oct	2009
Installation of sensors	March – Oct	2009
Installation of RDBM	June – Oct	2009
Final startup, testing and acceptance of system	Nov – Dec	2009

Romania InterOperate
Meteorological Sensors Cost Data

Sensor	Manufacturer	Model	Price	Notes
Present Weather	Optical Scientific	WIVIS/OWI	$ 7,500.00	Optical sensor
	All Weather Inc.	6490	$ 44,515.00	Includes Base Station, Communications Equipment, and shipping
	Coastal Environmental	Laser Drisdometer	$ 4,980.00	Thies model - Already in use at NMA
Soil Moisture Probe	Campbell Scientific	Sentek EnviroSMART (FDR)	$ 2,182.00	Includes access tubes, 81 meters of cable
	Campbell Scientific	Sentek EnviroSMART (FDR)	$ 3,786.00	Includes access tubes, portable datalogger CR215
	MESA technologies	TRIME Tube Access TDR meter	$ 9,433.00	Includes Data Pilot, access tubes and auger set
	MESA technologies	TRIME TDR-EZ TDR Probe	$ 1,450.00	Access tubes, auger set not included. Only 5 meters of cable
	Coastal Environmental	Water Content Reflectometer	$ 1,857.00	Does not include cable $6.50/meter. Need three 30cm probes (quoted) for required depth
Mobile Automatic Weather Station	Campbell Scientific	Custom	$ 4,925.00	Includes CR1000 datalogger
	Coastal Environmental	Zeno Weather Station	$ 7,095.00	Includes datalogger and software
	Vaisala	WXT510	$ 2,320.00	No datalogger, does not measure solar radiation or soil temp
	All Weather Inc.	TAMS	$ 18,771.00	Includes Radio Communication and shipping
Tethersonde	Vaisala	DigiCORA tethersonde sys.	$ 85,000.00	Does not include sondes
Radiosonde	Coastal Environmental	GPSonde	$ 41,664.00	Might not record NO2, SO2; sondes are one time use, does not include balloons
Air Pollution Monitoring	Air Instruments and Measurements	AIM 8500	$ 41,980.00	

Interoperate Project						
RNMA Romania - USTDA						
Sensor Cost Estimates						
DFP 2-05-08						
		Inflation factor 2005 - 2008 =	*1.12*			
Type	***Sensor Source***	***Description***	***2005 Price Each***	***2008 Price each***	***Number Required***	***Total Cost***
Present Weather	Vaisala PWD22	Visibility, measurement 10-2000 m; Identifies 7 types of precipitation intensity and amount	$ 14,677.10	$ 16,438.35	20	$ 293,542.00
		Shipping	$ 1,100.00	$ 1,232.00	20	$ 22,000.00
		Total Equipment	**$ 15,777.10**			**$ 315,542.00**
		Installation (no added cost if installed at Automatic WS site)*		$ -		$ -
		Total Equipment and Installation	**$ 15,777.10**	**$ -**		**$ 315,542.00**
Soil Moisture Probe	Campbell Scientific CS616	Time Domain Reflectometer probe, consists of 2- 30 cm long stainless steel probes and wireless CR1000 datalogger	$ 3,325.20	$ 3,724.22	10	$ 33,252.00
		Shipping	$ 1,500.00	$ 1,680.00	10	$ 15,000.00
		Total Equipment	**$ 4,825.20**			**$ 48,252.00**
		Installation	**$ 391.00**	$ 437.92	10	$ 3,910.00
		Total Equipment and Installation	**$ 1,891.00**			**$ 52,162.00**
Portable / Automatic Weather Station	Campbell Scientific Custom	Portable station with wind speed and direction, net radiation, air temp, relative humidity, soil temp probes plus GPS, 3 meter tripod, CR1000 datalogger, software and GSM Communications with 10 meter mast.	$ 6,670.00	$ 7,470.40	50	$ 333,500.00
		Shipping	$ 582.00	$ 651.84	50	$ 29,100.00
		Total Equipment	**$ 7,252.00**			**$ 362,600.00**
		Installation	**$ 2,493.00**	**$ 2,792.00**	43	$ 107,199.00
		Total Equipment and Installation	**$ 9,745.00**			**$ 469,799.00**
Tethersonde	Vaisala DigiCORA Tethersonde	Base System with six sondes	$ 78,538.00	$ 87,962.56	3	$ 235,614.00
		System Training	$ 3,840.00	$ 4,300.80	1	$ 3,840.00
		Shipping	$ 1,500.00	$ 1,680.00	3	$ 4,500.00
		Total Equipment	**$ 83,878.00**			**$ 243,954.00**
		Installation	**$ 1,653.00**	**$ 1,851.00**	3	$ 4,959.00
		Total Equipment and Installation	**$ 85,531.00**			**$ 248,913.00**
Air Pollution Monitoring	Air Instruments and Measurements AIM 8500	Open path gas analyzer. Measures SO2, NO, NO2 Includes 900mhz communications option	$ 38,970.00	$ 43,646.40	1	$ 38,970.00
		Shipping	$ 2,450.00	$ 2,744.00	1	$ 2,450.00
		Total Equipment	**$ 41,420.00**			**$ 41,420.00**
		Installation	1653	**$ 1,851.00**	1	$ 1,653.00
		Total Equipment and Installation	**$ 43,073.00**			**$ 43,073.00**
All Required Sensors		**Total Cost all Required Sensors**				**$ 934,878.00**
		Total Cost all Shipping				**$ 73,050.00**
		Total Cost all Training				**$ 3,840.00**
		Total Cost all Installation				**$ 117,721.00**
		Total Cost all Required Sensors Complete in Place w/Training				**$ 1,129,489.00**
		Contingency at 10% of total				**$ 112,948.90**
		Design at 10% of total				**$ 112,948.90**
	Total Cost all Required Sensors Complete in Place w/Training with 10% contingency					**$ 1,355,386.80**

NOTES

Manufacturing for ten meter high mast : 840 x 1.12 = 940.80 ($941)

Infrastructure (concrete fondation, mains power supply, guy wires, ligtning rods, communication cables) : 1262 x 1.12 = 1413.44 ($1413)

Equipemnt mounting on site: 391 x 1.12 = 437.92 ($438)

We assumed that all PWD22 (20 pcs.) will be mounted on the same sites as the automatic weather stations; 7 pcs from 50 will be kept for portable use (one for each Regional Meteo Center)

If the PWD22 is installed at a separate location the added cost per site would be - manufacturing mast, $250, Infrastructure, $700 and installation, $438 total of $1,388 per separate site.

Interoperate Project
RNMA Romania - USTDA
Summary Cost Estimates - Recommended Option
DFP 3-08

Equipment, Software or Service	*Source*		*Quantity Required*	*Total Cost*	*Annual Cost*
SENSORS					
Present Weather	Vaisala PWD22		20	$315,542	
Soil Moisture Probe	Campbell Scientific CS616		10	$52,162	
Portable / Automatic Weather Station	Campbell Scientific Custom		50	$469,799	
Tethersonde	Vaisala DigiCORA		3	$248,913	
Air Pollution Monitoring	Air Instruments and Measurements AIM 8500		1	$43,073	
Total for All Required Sensors				$1,129,489	
Total for All Required Sensors	With Contingency & Design =	20%		$1,355,387	$135,539
HIGH PERFORMANCE COMPUTER					
Computing	16 nodes w/32 GB memory ea		16	$1,296,000	
Service	Four w/32 GB memory ea		4	$404,000	
Operational Storage	Two servers w/14-300GB disks		2	$124,000	
Archival Storage	One server w/3x14 250 GB disks		1	$66,000	
Tape Storage	one tape robot w/four 3-tape drives		1	$144,000	
SAN	Two fiber channel switches		2	$33,000	
Network	one		1	$46,000	
Software	Compiler suite and licenses		4	$152,000	
Total Estimated Hardware Cost	Recommended Configuration			$2,265,000	$453,000
RELATIONAL DATABASE MANAGEMENT					
Hardware Cost				$27,000	
Software Cost				$64,170	
Total Estimated RDBM Cost				$91,170	24,550
TOTAL, All Costs				$3,711,557	$613,089
Amortized Cost	6-year life at 6% interest	factor = 0.203		$753,446	
TOTAL Annual Cost					$1,366,535

Note: Sensor annual costs as a percentage of investment = 10%

Interoperate Project
RNMA Romania - USTDA
Summary Cost Estimates - Minimum Option
DFP 3-08

Equipment, Software or Service	*Source*		*Quantity Required*	*Total Cost*	*Annual Cost*
SENSORS					
Present Weather	Vaisala PWD22		20	$315,542	
Soil Moisture Probe	Campbell Scientific CS616		10	$52,162	
Portable / Automatic Weather Station	Campbell Scientific Custom		50	$469,799	
Tethersonde	Vaisala DigiCORA		3	$248,913	
Air Pollution Monitoring	Air Instruments and Measurements AIM 8500		1	$43,073	
Total for All Required Sensors				$1,129,489	
Total for All Required Sensors	With Contingency & Design =	20%		$1,355,387	$135,539
HIGH PERFORMANCE COMPUTER					
Computing	8 nodes w/32 GB memory ea		8	$680,888	
Service	Two w/32 GB memory ea		2	$202,000	
Operational Storage	One server w/14-300GB disks		1	$58,000	
Archival Storage	One server w/3x14 250 GB disks		1	$66,000	
Tape Storage	one tape robot w/four 3-tape drives		1	$139,000	
SAN	Two fiber channel switches		2	$33,000	
Network	one		1	$46,000	
Software	Compiler suite and licenses		2	$76,000	
Total Estimated Hardware Cost	Minimal Configuration			$1,300,888	$260,000
RELATIONAL DATABASE MANAGEMENT					
Hardware Cost				$23,000	
Software Cost				$64,170	
Total Estimated RDBM Cost				$87,170	24,550
TOTAL, All Costs				$2,743,445	$420,089
Amortized Cost	6-year life at 6% interest factor =	0.203		$556,919	
TOTAL Annual Cost					$977,008

Note: Sensor annual costs as a percentage of investment = 10%

Interoperate Romania Project
Potential Suppliers of Sensor and Computing Equipment
Includes US or partial US Sources

PRESENT WEATHER SENSORS

1 – Coastal Environmental Systems

Coastal Environmental Systems, Inc.
820 First Avenue South ♦ Seattle, Washington 98134
www.CoastalEnvironmental.com
800-488-8291 x170
kpaletta@CoastalEnvironmental.com

2 – Optical Scientific, Inc.

205 Perry Parkway	Optical Scientific Inc.	301-963-3630 phone
Suite 14		301-948-4674 fax
Gaithersburg, MD 20874		sales@opticalscientific.com

3 – All Weather, Inc.

allweather inc

Advanced Weather Reporting For An Unpredictable World

1165 National Drive
Sacramento, CA 95834

Tel (916) 928-1000
Fax (916) 928-1165
EMAIL sglander@allweatherinc.com
http://www.allweatherinc.com

Portable Soil Moisture Sensors

1 – MESA Systems Co.

MESA Systems Co. 6 West Mill St., Unit 3, MA 02502-1507
508/359-5322, fax: 508/359-5339, sales@mesasystemsco.com

---

2 – Campbell Scientific

CAMPBELL SCIENTIFIC, INC.

815 W 1800 N · Logan, UT 84321-1784 · USA · (435) 753-2342
FAX (435) 750-9540 · www.campbellsci.com

MOBILE AUTOMATIC WEATHER STATIONS

1 – Campbell Scientific

CAMPBELL SCIENTIFIC, INC.

815 W 1800 N · Logan, UT 84321-1784 · USA · (435) 753-2342
FAX (435) 750-9540 · www.campbellsci.com

2 – Coastal Environental

Coastal Environmental Systems, Inc.
820 First Avenue South ♦ Seattle, Washington 98134
www.CoastalEnvironmental.com
800-488-8291 x170
kpaletta@CoastalEnvironmental.com

3 – Vaisala, Inc

P.O. Box 26, FIN-00421 Helsinki, FINLAND
Tel: +358 9 894 91
Fax: +358 9 8949 2485
Email: weather.transmitter@vaisala.com
www.vaisala.com

Vaisala Inc.
Boulder, CO, USA
Tel. +1 303 499 1701
Fax +1 303 499 1767

TETHERSONDE SYSTEMS

1 – Vaisala, Inc.

P.O. Box 26, FIN-00421 Helsinki, FINLAND
Tel: +358 9 894 91
Fax: +358 9 8949 2485
Email: weather.transmitter@vaisala.com
www.vaisala.com

Vaisala Inc.
Boulder, CO, USA
Tel. +1 303 499 1701
Fax +1 303 499 1767

2 – Coastal Environmental Systems, Inc.

Coastal Environmental Systems, Inc.
820 First Avenue South ♦ Seattle, Washington 98134
www.CoastalEnvironmental.com
800-488-8291 x170
kpaletta@CoastalEnvironmental.com

BACKGROUND AIR POLLUTION MONITORING STATION

1 – Air Instruments and Measurement, Inc.

AIR INSTRUMENTS & MEASUREMENTS, LLC
[mailing] PMB 391, 3579 E. Foothill Blvd, Pasadena CA 91107, USA aimanalysis@earthlink.net
[physical] 2275 E. Foothill Blvd, Pasadena, CA, 91107, USA http://www.aimanalysis.com

HIGH PERFORMANCE COMPUTER AND RELATED EQUIPMENT

For the High Performance Computing Facility, IBM equipment is considered the best suited, based on its wide application in meteorological services around the world, and resulting capabilities of support organizations within the manufacturer's system. However, othjer suppliers may meet the technical performance requirements as follows:

1. IBM Power 5+ 575
2. Cray X-1
3. Fujitsu VPP 5000
4. SGI Altix
5. Sun E25k

For the RDBM, there is an advantage in using equipment of the same manufacturer as the primary high performance computer system, especially if the primary equipment is IBM. Potential suppliers are:

1. IBM
2. Cray
3. SGI (Silicon Graphics Incorporated)
4. HP (Hewlett Packard)

ATTACHMENT A

HIGH PERFORMANCE COMPUTING FACILITY

THE OHIO STATE UNIVERSITY SUPERCOMPUTER CENTER REPORT

Attachment A – High Performance Computing Facility

The Ohio State University Ohio Supercomputer Center

The systems recommended in the following report provide the technical performance required, with identification of specific equipment meeting RNMA's needs. Equipment from other manufacturers with the same characteristics and capabilities as this equipment may be equally acceptable to RNMA.

A High Performance Computing Facility
For the
Romanian National Meteorological Administration

Prepared for Burgess & Niple, Inc.

By

Troy Baer, Jim Giuliani, and Leslie Southern
(Ohio Supercomputer Center)

David Bromwich and Rick Toracinta
(Ohio State University Byrd Polar Research Center)

April 14, 2006

FINAL REPORT

High Performance Computer Facility Sub-Report

TABLE OF CONTENTS

	Page
EXECUTIVE SUMMARY	1
Introduction	2
Assessment of Requirements and Current Capabilities	3
Computational Requirements	3
Data Storage Requirements	3
Operational Requirements	3
Current Capabilities	4
Proposed System	6
Vendor	7
High Performance Computing System	8
Storage Infrastructure	10
Network Infrastructure	12
Facilities Considerations	13
Implementation Plan	14
Support and Long-Term Maintenance	15
Conclusions	17

TABLE OF CONTENTS (continued)

LIST OF TABLES

Table No.	Description	
1	RNMA Storage Pools	5
2	Compute Node Configurations	10
3	Service Node Configurations	10
4	Storage Configurations	12
5	Estimated Facilities Requirements	14

LIST OF FIGURES

Figure No.	Description	
1	Recommended System Configuration	7

LIST OF APPENDICES

Appendix	Description
A	Detailed Configuration of Proposed System
B	Performance Characteristics
C	Estimates of Forecast Data Production Rates
D	Estimates of Reduced Data Production

EXECUTIVE SUMMARY

The Romanian National Meteorological Administration (RNMA) desires to purchase a high performance computer (HPC) system to support numerical weather prediction simulations as part of its part of the INTEROPERATE project. Based on RNMA's projected needs, a number of key design criteria have been identified:

- High Memory Bandwidth
- Redundancy and Fault Tolerance
- Vendor Compiler Support
- Operational Data Lifetime of 30 Days
- Compatibility with ECMWF
- Hierarchical Storage Management of Archival Data.

To meet these criteria, an integrated solution comprised of a cluster of IBM Power5+ model 575 systems with Fibre Channel based disk and tape storage is proposed. Two configurations are proposed: a minimal configuration just large enough to support RNMA's operational forecast computing with some redundancy, and a recommended configuration with additional capacity to support research and development work at RNMA.

Introduction

As part of the INTEROPERATE project, the Romanian National Meteorological Administration (RNMA) desires to purchase a high performance computer (HPC) system to support numerical weather prediction simulations as well as storage of weather observations. This system must support both operational meso-scale weather models as well as a variety of related research applications. The system must integrate with other aspects of the INTEROPERATE project, such as remote sensing devices and Doppler radar imaging. Moreover, given that the system will provide daily weather forecasting information for all of Romania, the system must be a production-grade, highly available solution integrating high performance computing resources with data storage. Both short-term storage of weather forecast data products and longer-term archival storage of reduced forecast data as well as remote sensing and radar data must be supported.

This report presents one possible system which could fulfill RNMA's needs. The report consists of two parts. The first part assesses the computing needs and current capabilities of RNMA with respect to meso-scale weather forecasting, and will present a number of design criteria which must be met by a system which would fulfill RNMA's needs. The second part of the report will present two system configurations and explain how those systems would meet the design criteria.

Assessment of Requirements and Current Capabilities

Computational Requirements

RNMA's primary application is meso-scale weather forecasting. There are several widely used applications in this space, including MM5 and its successor WRF in the United States, and ALADIN and AROME in Europe. While these codes vary in their numerical approaches, like many other classes of scientific computing applications their performance characteristics are dominated almost entirely by memory bandwidth. Systems with *high memory bandwidth* – that is, a very high rate of sustained data transfer between the processors and main memory -- have been demonstrated to have superior performance on meso-scale weather forecasting applications compared to systems with higher peak floating point performance but lower memory bandwidth. High memory bandwidth has therefore been identified as a key design criterion.

Data Storage Requirements

While meso-scale weather forecasting is RNMA's main computing application, the data products from the forecast computations are not the sole type of data that they need to store. Satellite and Doppler radar imaging data must also be stored, along with remote sensing data generated by other components of the INTEROPERATE project. Very broadly speaking, these data fall into two very broad categories, operational and archival. Operational data is primarily the full output of the meso-scale weather forecasts and is relatively ephemeral; currently RNMA only keeps forecast output for 17 days, although they would like to extend that to an *operational data lifetime of 30 days* if possible. A lifetime of at least 30 days for operational data has therefore been identified as a key design criterion. Archival data, on the other hand, is to be kept for as long as possible – preferably forever. Examples of archival data include satellite and Doppler radar imagery and reduced forecast output.

Operational Requirements

RNMA forecasts weather for the entire nation of Romania, which includes several mountainous regions prone to flash flooding. As a result, RNMA requires a very high degree of *redundancy and fault tolerance* from its production computing system. Single points of failure need to be minimized or eliminated wherever possible, in all aspects of the system. Moreover, the system should have sufficient capacity to keep running the production forecasts in the face of hardware failures in a significant fraction of the system, at the expense of RNMA's research applications if need be. As a result, redundancy and fault tolerance have been identified as key design criteria.

Current Capabilities

RNMA currently has two local computing systems used for meso-scale weather forecasting, a Sun E4500 system with eight processors and a 28-processor cluster of commodity systems running Linux. Most of RNMA's production forecasting runs are done using the Sun E4500. Compiler problems on the Linux cluster system are cited as the main reasons of that system's lack of adoption; *vendor compiler support* is considered critical and therefore a key design criterion.

Planning for future collaborations with other European countries is another important consideration. Many other European nations have discussed the computational aspects of weather modeling projects, but relatively few discuss a complete data lifetime solution from acquisition through transfer and storage to numerical modeling, data reduction, and archiving. Upon Romania's entry to the European Union, RNMA would also have access to the HPC facility at the European Center for Medium range Weather Forecasting (ECMWF), which is a cluster of IBM Power4 p690 systems. *Compatibility with ECMWF* is therefore seen as an important part of any future system acquisition and a key design criterion.

With regard to data storage, RNMA currently has several separate pools of online storage allocated to particular projects, with a total capacity of approximately 1.2 terabytes. Offline storage is currently done to a variety of media, including optical (recordable CDROMs and DVDs) and magnetic (4mm DAT). Because the offline storage is handled separately for each type of data, there is to the authors' knowledge no master index of all the data and no automated

way of recalling offline data back to online storage. This situation could be remedied with *hierarchical storage management of archival data*, using a centralized data archive such as a magnetic tape library. As a result, hierarchical storage management for archival data is seen as a key design criterion.

Table 1: RNMA Storage Pools

Project	**Current Capacity (GB)**	**Space Currently Used (GB)**	**Current Growth Rate (GB/month)**	**Projected Growth Rate (GB/month)**
Climatological Database	50	15	0.5	2
Forecast Data	~50(?)	~50(?)	31	100
Radar Data	604(?)	604(?)	25.4	25.4
Satellite Data	500	500(?)	100-150	100-150

Proposed System

As described in the previous section, RNMA's computing and operational requirements result in the following design criteria:

- High Memory Bandwidth
- Redundancy and Fault Tolerance
- Vendor Compiler Support
- Operational Data Lifetime of 30 Days
- Compatibility with ECMWF
- Hierarchical Storage Management of Archival Data.

In the authors' view, the system which would best meet these criteria is an integrated solution comprised of a cluster of IBM Power5+ model 575 computers running AIX 5.3 with Fibre Channel based disk and tape storage managed by IBM's GPFS, Tivoli Storage Manager, and DB2 software. The following sections will describe the proposed system in greater detail and present two possible configurations: a minimal configuration just large enough to support RNMA's operational forecast computing with some redundancy, and a second, recommended configuration with additional capacity to support research and development work at RNMA. Complete hardware and software specifications for the system, including cost estimates, can be found in Appendix A; however, it should be kept in mind that the costs shown there are merely estimates for the system itself and do not include shipping, installation, integration, or facility power and cooling costs.

Figure 1: Recommended System Configuration

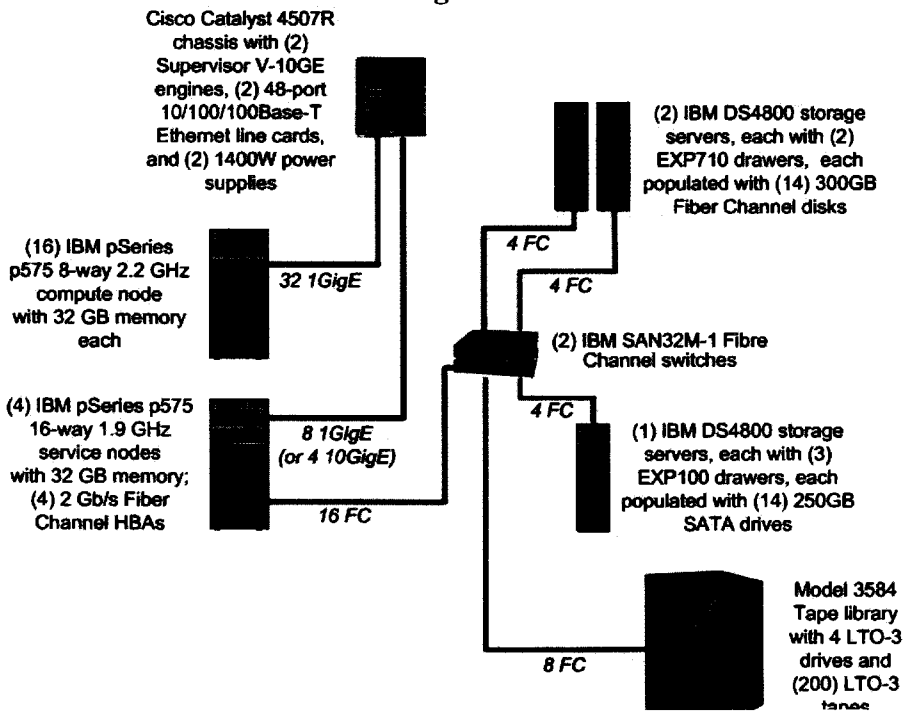

Vendor

From a support perspective, a system of the size and potential complexity needed to support all of RNMA's desired workload is most easily acquired from and supported by a single vendor, rather than acquiring components *a la carte* and integrating them with in-house staff. There are at least five major United States computer manufacturers who can field HPC systems with the desired attributes, as well as disk and tape storage: Cray, HP, IBM, SGI, and Sun. Of these, IBM fields the hardware with the highest demonstrated memory bandwidth per processor. IBM is also the only one of these vendors who can field credible enterprise quality database and tape backup solutions of their own. IBM also has offices worldwide (including in Romania) and is in excellent financial health, a factor which needs to be considered given the importance of this system to Romania's weather forecasting ability. Moreover, IBM already supports a number of large sites doing work similar to that desired by RNMA, including ECMWF in the United Kingdom as well as NCAR and NOAA in the United States.

High Performance Computing System

The core of the proposed system is a number of IBM Power5+ model 575 computers. The Power5+ model 575 is an eight- or sixteen-processor system based on IBM's multi-core Power5+ technology, with an unusual rackmount chassis design which allows up to twelve systems to fit into a specially designed 61-cm (24-inch) rack. The 575 is a natural choice as the "building block" for the type of system desired by RNMA, as it fulfills several of the design criteria outlined above. It has extremely high memory bandwidth, with sustained performance of 100.5 gigabytes per second on the STREAM triad benchmark. With either eight or sixteen processors per system sharing anywhere from 1 to 256 gigabytes of memory, it supports shared memory programming models very well; however, distributed memory programming models such as MPI are also supported with the addition of a high speed network such as Infiniband or IBM's High Performance Switch network. The XL Compiler suite for the Power5 architecture is widely used on weather codes around the world and is actively supported by IBM. The Power5 architecture is also consistent and compatible with the facilities at ECMWF and other meteorological computing facilities around the world. Finally, the 575 is among the highest performing systems in the world on a per-node basis for a number of meteorological codes; for instance, an 8-processor 575 performs at 19.23 GFLOP/s on the MM5 T3A Standard benchmark, which is roughly comparable of the performance of 10 processors on a Fujitsu VPP5000 vector supercomputer for the same application and data set. Appendix B compares the performance of the 575 on the MM5 T3A benchmark to that of a Cray X1, a Fujitsu VPP5000, and an SGI Altix 3700.

It should be noted that while this proposed system is a "cluster" in the sense that it is a collection of computers with identical (or at least very similar) hardware characteristics, it is a much different sort of system than a cluster of commodity computers such as the one currently in use at RNMA. The individual computers are much more powerful and have better RAS (reliability, availability, and serviceability) features than commodity systems. It also comes as an integrated system with computing, storage, and software all from the same vendor, as opposed to the *a la carte* approach used on most commodity clusters. One could argue that having a few systems with many processors, such as the IBM Power5+ model 595, might be more effective than a larger number of more modestly sized systems; however, there are a number of reasons

why the authors believe this is not the case. First, having a smaller "quantum" makes it less expensive to scale the system horizontally by adding more computers. Second, from an overall system availability point of view, a hardware failure in a larger node will disable a proportionately larger fraction of the overall system's capabilities than the failure of a smaller node will, assuming that the mean time between failure is roughly the same between the two. Third, in the specific case of the 595, the larger node actually has substantially less total memory bandwidth (174.5 GB/s on a 64-processor 595) than an equivalent number of processors of the smaller nodes (8 x 100.5 GB/s on an 8-processor 575 = 804.0 GB/s).

The proposed system would have two slightly different types of computers with very different missions: *service nodes* and *compute nodes*. A service node is a computer which is responsible for running one or more system services, such as login access, the LoadLeveler batch system, or the GPFS file system; as such, it may be accessible from outside the cluster. In contrast, a compute node is a computer whose sole task is running computations – in this case, meteorological simulations – and therefore may not be accessible from outside the cluster. Both types of nodes would use the Power5+ model 575 hardware, but in different configurations. The authors recommend that the compute nodes be the 8-processor version of the 575 and the service nodes be the 16-processor version. This may seem contradictory at first glance – why not vice versa; but there is a reason for it. Recall that the limiting factor on performance of meso-scale weather models is generally memory bandwidth. The 16-processor version of the 575 has almost exactly the same measured memory bandwidth as the 8-processor version, so it is not clear that the 16-processor version would have any substantial performance advantage for the class of problems of interest to this system. In addition, the individual processors in the 16-processor version of the 575 are slightly slower than those available in the 8-processor version. For service nodes however, I/O and network bandwidth are more important than memory bandwidth per processor; here the 16-processor version is preferable, as it allows the node to be partitioned into many virtual servers using the logical partition (LPARS) functionality available in AIX.

At peak demand, RNMA's projected production workload has three concurrent jobs running at the same time. To allow for the potential of hardware failures, the authors recommend an absolute minimum of eight compute nodes and 2 service nodes. A more robust configuration

would be 16 compute nodes and 4 service nodes. If all hardware is operational, any capacity in excess of that required for operational forecasts is available for research computing.

Table 2

Compute Node Configurations

	Minimal	**Recommended**
Number of Compute Nodes	8	16
Processors per Compute Node	8	8
Compute Node Processor Speed	2.2 GHz	2.2 GHz
Memory per Compute Node	32 GB	32 GB
Compute Node Network Interfaces	2x Gigabit Ethernet	2x Gigabit Ethernet

Table 3

Service Node Configurations

	Minimal	***Recommended***
Number of Service Nodes	2	4
Processors per Service Node	16	16
Service Node Processor Speed	1.9 GHz	1.9 GHz
Memory per Service Node	32 GB	32 GB
Service Node Network Interfaces	2x Gigabit Ethernet, 4x 2Gbit/s Fibre Channel	2x Gigabit Ethernet, 4x 2Gbit/s Fibre Channel

Storage Infrastructure

Two to three IBM DS4800 disk controllers and an IBM 3584 LTO-3 tape library would be used to store the data produced by the forecasts run on the above computing system, as well as

that acquired from external sources such as satellite and radar imagery. Operational data would be stored one or two DS4800s, using Fibre Channel disks for the high read and write performance. Access to the disk volumes from the compute nodes would be managed using IBM's General Purpose File System (GPFS), which is used at ECMWF and a number of other HPC facilities around the world. Based on estimates provided by RNMA, the actual volume of forecast data produced per month would be on the order of 1.1 TB; however, the authors recommend provisioning at least 4 TB and preferably 16-20 TB of disk for operational data to allow for model growth, longer data retention, and novel or unforeseen applications.

Backups and access to the tape library would be handled through the Tivoli Storage Manager (TSM) software, which would be run on two of the service nodes. The Space Management option to TSM would be used in conjunction with GPFS to manage the archival data, allowing transparent migration of archive files between the LTO3 tape robot and a 10 TB disk cache on a DS4800 equipped with SATA disks for maximum capacity/cost. Because of the volume of data involved (currently 1.2 TB plus a worst case growth rate of 0.28 TB/month), the TSM space management option appears to be a better match for RNMA's environment than HPSS, as the latter has very substantial capital cost and administrative overhead associated with it which only pay off for data volumes in the multi-petabyte range.

Storage of query-able data in relational database form would be accomplished using the DB Universal Database engine, which would also be running in LPARs on the service nodes. DB2 is an enterprise grade, highly scalable clustered database solution that can use GPFS as its storage backend, and it can integrate with TSM to manage backups of the databases. Furthermore, IBM xSeries servers with DB2 instances could be deployed at RNMA's regional facilities for handling local database needs.

As with the HPC portion of the system, the storage in the proposed system must be redundant and highly fault tolerant. To that end, the authors recommend interposing a storage area network (SAN) comprised of two IBM SAN32M-1Fibre Channel (FC) switches between the service nodes and any storage devices. The service nodes and storage devices would have half of their FC links connected to each switch, so that all the hosts and devices have connectivity to each other (albeit in a degraded fashion) in the event of a FC link or switch failure. The two FC

switches should have at least one inter-switch link (ISL) connected between them. This leaves the tape robot's arm mechanisms as the only single point of failure in the storage infrastructure; if that is a significant operational consideration, then an upgrade to the High Availability (HA) version of the 3584 robot should be purchased.

Table 4

Storage Configurations

	Minimal	**Recommended**
DS4800 Disk Controllers for Operational Data	1	2
Disks per Controller	14	28
Disk Size and Technology	300GB FC	300GB FC
Operational Data Raw Capacity	4.2 TB	16.8 TB
DS4800 Disk Controllers for Archival Disk Cache	1	1
Disks per Controller	42	42
Disk Size and Technology	250GB SATA	250GB SATA
Archival Disk Cache Raw Capacity	10.5 TB	10.5 TB
Total Disk Raw Capacity	14.7 TB	27.3 TB
Tape Drives	4	4
Number of Tapes	75	200
Tape Size and Technology	400GB LTO3	400GB LTO3
Tape Raw Capacity	30 TB	80 TB
Total Number of FC Links	16	20

Network Infrastructure

The system described above requires network connectivity between the compute and service nodes. As each 575 comes with two onboard Gigabit Ethernet interfaces, Gigabit Ethernet is the logical choice. However, in keeping with the design criteria of redundancy and fault tolerance, any Gigabit Ethernet switch used in this sort of system should have redundant power supplies, switch fabric/supervisor modules, and line cards. One such switch is the Cisco Catalyst 4507R. The switch configuration recommended for this

system includes two supervisor modules and two Gigabit Ethernet line cards; for the sake of redundancy, the two Gigabit Ethernet interfaces on a 575 should be plugged into different line cards. The switch configurations shown in Appendix A also include supervisor modules with two 10 Gigabit Ethernet ports each for high bandwidth connectivity out of the system. If greater I/O bandwidth is desired, 10 Gigabit Ethernet interfaces could be installed in the service nodes and connected to these ports on the switch.

A high performance message passing network such as Infiniband or IBM's HPS was not included in the configurations presented in this report. However, one could easily be added at additional cost.

Facilities Considerations

The proposed system should be housed in a climate-controlled, raised-floor environment with sufficient power and cooling. The Power5+ model 575 requires a special 24-inch (60.96 cm) wide rack, which may contain up to twelve 575 systems. A fully populated rack can consume up to 41.5 (kilovolt-ampere (kVA) of electricity (using 3-phase power in 240 or 480-volt alternating current (VAC), exhaust up to 41.6 kilowatts (kW) of heat into its surroundings, and weigh up to 1,581 kilograms (kg). In addition, the storage and network infrastructure will require three racks of equipment and significant amounts of electrical power (using single-phase 240 VAC) as well. Table 5 shows estimates of the power, cooling, and floor space requirements for both proposed configurations; however, guidance from the manufacturer should also be followed in this regard.

Table 5

Estimated Facilities Requirements

	Minimal	**Recommended**
Number of 575 Racks	1	2
Maximum 575 Power Draw	34.7 kVA	69.3 kVA
Number of Disk Racks	1	1
Number of Disk "Rack Units"	20U	33U
Maximum Disk Power Draw	2.0 kVA	3.4 kVA
Number of Tape Racks	1	1
Maximum Tape Power Draw	1.6 kVA	1.6 kVA
Number of Network Racks	1	1
Number of Network "Rack Units"	15U	15U
Maximum Network Power Draw	3.3 kVA	3.3 kVA
Total Power Required	41.6 kVA	77.6 kVA
Total Cooling Required	11.9 tons	22.1 tons
Total Floor Space Required	10.5 m^2	15.0 m^2

Implementation Plan

Deploying a production-grade system of the size and complexity of that described above is a non-trivial task which should be undertaken in phases. First, once the final configuration is selected but before the system is shipped, the system's total power and cooling requirements must be used to make any necessary upgrades to the facility where the system will be housed. These upgrades should be in place before the system is delivered, so that the hardware is not forced to sit idle or unusable after delivery.

The system should be delivered and installed by either the manufacturer or an integrator approved by both RNMA and the manufacturer. Once the physical installation is completed, the service nodes, network switches, and storage devices should brought up and minimally configured. Logical units (LUNs) on the disk controllers should then be created and assigned to operational data GPFS, archival data GPFS, TSM disk cache for backups, or a particular service node. From that point, several tasks can be undertaken more or less concurrently:

- Creating and testing the GPFS volumes for operational data and archival data.
- Creating and testing databases in the DB2 database engine.
- Installing, configuring, and testing TSM, both for backups and for space management on the archival data GPFS volume.
- Installing, configuring, and testing user-space software such as the XL Compiler suite and LoadLeveler.
- Bringing up and configuring the compute nodes.

Once the user-space software is installed and some of the compute nodes are up and available for scheduling through LoadLeveler, users can be allowed onto the system so that they can begin porting and benchmarking their codes on the new platform. When all of the above tasks have been completed, the new system should begin running the full production workload concurrently with the old production system, so that the results of the new system can be verified against that of the old system. Finally, once all the applications on the old production system have been verified, a deadline can be set for migrating off of the old system.

Support and Long-Term Maintenance

Annual hardware and software maintenance from IBM for American customers is typically 20 percent of the initial purchase price per year, and this is reflected in the estimated

costs shown in Appendix A. In addition, the authors recommend having at least four full time on-site staff to administer the system. These would consist of:

- A lead administrator who would be in charge of the overall project, and responsible for the maintenance of the computer hardware and AIX system software.

- A storage administrator who would be responsible for managing the storage hardware, GPFS file systems, and TSM backups.

- A database administrator who would be responsible for maintaining the DB2 database engine.

- A support engineer who would be responsible for maintaining user-space software such as compilers, as well as assisting users in porting and tuning their codes to the system.

All four of these positions could be filled with either existing RNMA personnel, new hires, or contract personnel from IBM or an integrator.

Conclusions

Given the needs of RNMA, it is the authors' opinion that the chances of success of this project will be significantly higher if a single vendor can be selected that will provide an integrated system, from both a hardware and software standpoint. Narrowing the responsible parties down to one vendor will provide RNMA significant leverage when problems arise or changes to the system/software are desired. After considering all of the options, it is the authors' belief that there is a clear leader among the various solution providers. IBM is identified as the system vendor for the following reasons:

- The IBM Power5+ model 575 architecture provides comparable performance on applications requiring high memory bandwidth, such as weather modeling codes, to other architectures like vector and EPIC. (See Appendix B.)

- A Power5+ 575 based system provides the scalability and redundancy needed to support a production weather forecasting system. In the recommended configuration, the failure of a 575 compute node would only require the simulations running on that compute node to be restarted on another node.

- IBM, who currently has an office in Romania, can provide a single software/hardware solution as well as integration and support services.

- IBM has a dedicated weather forecasting group that could provide expertise in integration and support.

- IBM can provide database software, integration and support services.

In addition to the primary points identified, IBM offers an architecture that runs weather modeling applications very well and they can provide a completely integrated hardware/software solution. IBM has the additional benefit that their systems are in use by many of the United States and Europe's leading weather forecasting organizations. Specifically, ECMWF as well as Spain and Germany use solutions from IBM and Meteo-France is currently evaluating their future hardware direction. Having a comparable system would greatly enhance collaborative opportunities for RNMA, particularly with ECMWF.

Appendix A

Detailed Configurations of Proposed System

Minimal Configuration

Compute: US $680,000.00
Eight (8) IBM model 575 8-way Power5+ 2.2GHz systems with 32 GB memory each.

Service: US $202,000.00
Two (2) IBM model 575 16-way Power5+ 1.9GHz systems with 32 GB memory and four (4) 2Gbit/s Fibre Channel HBAs each.

Operational Storage: US $58,000.00
One (1) IBM DS4800 storage server with one (1) EXP710 drawer populated with fourteen (14) 300GB Fibre Channel disks.

Archival Storage: US $66,000.00
One (1) IBM DS4800 storage server with three (3) EXP100 drawers, each populated with fourteen (14) 250GB SATA disks.

Tape Storage: US $139,000.00
One (1) IBM 3584-L52 tape robot base frame with four (4) LTO-3 tape drives and seventy-five (75) LTO-3 tapes.

SAN: US $33,000.00
Two (2) IBM SAN32M-1 Fibre Channel switches.

Network: US $46,000.00
One (1) Cisco Catalyst 4507R chassis with two (2) Supervisor V-10GE engines, two (2) 48-port 10/100/100Base-T Ethernet line cards, and two (2) 1400W power supplies.

Software: US $76,000.00
AIX 5.3, XL Compiler Suite, LoadLeveler, GPFS for AIX Tivoli Storage Manager licenses for two (2) 16-processor systems, with the space management (HSM) option DB2 Universal licenses for two (2) 16-processor systems, with the partitioning option.

Estimated Hardware/Software Cost: **US $1,300,000.00**

Annual Maintenance: **US $260,000.00**

Recommended Configuration

Compute: US $1,296,000.00
Sixteen (16) IBM model 575 8-way Power5+ 2.2GHz systems with 32 GB memory each.

Service: US $404,000.00
Four (4) IBM model 575 16-way Power5+ 1.9GHz systems with 32 GB memory and four (4) 2Gbit/s Fibre Channel HBAs each.

Operational Storage: US $124,000.00
Two (2) IBM DS4800 storage servers, each with two (2) EXP710 drawers populated with fourteen (14) 300GB Fibre Channel disks each.

Archival Storage: US $66,000.00
One (1) IBM DS4800 storage server with three (3) EXP100 drawers, each populated with fourteen (14) 250GB SATA disks.

Tape Storage: US $144,000.00
One (1) IBM 3584-L52 tape robot base frame with four (4) LTO-3 tape drives and two hundred (200) LTO-3 tapes.

SAN: US $33,000.00
Two (2) IBM SAN32M-1 Fibre Channel switches.

Network: US $46,000.00
One (1) Cisco Catalyst 4507R chassis with two (2) Supervisor V-10GE engines, two (2) 48-port 10/100/100Base-T Ethernet line cards, and two (2) 1400W power supplies.

Software: US $152,000.00
AIX 5.3, XL Compiler Suite, LoadLeveler, GPFS for AIX Tivoli Storage Manager licenses for four (4) 16-processor systems, with the space management (HSM) option. DB2 Universal licenses for four (4) 16-processor systems, with the partitioning option.

Estimated Hardware/Software Cost: **US $2,265,000.00**

Annual Maintenance: **US $453,000.00**

Appendix B

Performance Characteristics

Platform	STREAM Triad Aggregate (GB/s)	STREAM Triad Per Processor (GB/s)	MM5 T3A Standard (136x112x33) (GFLOP/s)	M5 T3A Standard Threads Used
Cray X1 64x0.8GHz, SSP	311.4	4.87	6.85	8
Cray X1 64x0.8GHz, SSP	311.4	4.87	11.47	16
Cray X1 64x0.8GHz, SSP	311.4	4.87	21.22	32
Fujitsu VPP5000 64x0.3GHz	N/A	37.50	16.65	10
Fujitsu VPP5000 64x0.3GHz	N/A	37.50	27.82	20
HP Superdome 64x1.5GHz	84.0	1.31	N/A	N/A
IBM Power5+ 575 8x2.2GHz	100.5	12.57	17.05	8
IBM Power5+ 575 8x2.2GHz	100.5	12.57	19.83	16
SGI Altix 64x1.5GHz	124.6	1.95	7.35	8
SGI Altix 64x1.5GHz	124.6	1.95	14.39	16
Sun E25k 72x1.5GHz	76.0	1.06	N/A	N/A

Results compiled from:

http://www.cs.virginia.edu/stream/standard/Bandwidth.html

http://www.csm.ornl.gov/~dunigan/cray/

http://www.mmm.ucar.edu/mm5/mpp/helpdesk/20040304a.html

http://www.ibm.com/systems/p/hardware/system_perf.html

Appendix C
Estimates of Forecast Data Production Rates

Simulation	Resolution	Estimated Output Volume per Run (GB)	Runs per Day	Estimated Data Volume per 30-day Cycle (GB)
ALADIN 5-10km/60hr	200x200x50	1.1	4	131.7
AROME 2.5km/36hr	480x480x70	4.1	4	489.9
LM 7km	401x321x35	2.5	4	296.4
LMK 2.8km	401x361x50	1.8	4	219.9
RegCM3 <25km/240hr	80x125x18	0.3	1	9.0
RegCM3 50km/240hr	31x51x18	0.1	1	1.5
			TOTAL:	1148.4

Note that not all the simulations which RNMA has expressed interest in running are listed here, only those for which resolutions are known and data volumes can be estimated. As a result, it is strongly recommended that a storage volume of at least three times that estimated here be deployed for forecast data.

Appendix D

Estimates of Reduced Data Production Rates

Data Type	Current Volume (GB)	Predicted Growth Rate (GB/month)	Volume after 3 Years (GB)
Climatological Database	15	0.5	33.0
Radar	604	25.9	1536.4
Satellite	500	150.0	5900.0
Forecast	50	100.0	3650.0
TOTAL:	1204	276.4	11119.4

Note that the total data volume here can include both disk and tape, using a hierarchical storage management system such as the proposed Tivoli software. As this estimate may not include all the data that RNMA may wish to store, it is recommended that the sum of archival disk and tape media be at least three times the data volume estimated here.

ATTACHMENT B

INTEROPERATE EQUIPMENT DATA DETAILS – 136 PAGE OPTIONAL SUPPLEMENT

Romania InterOperate
Meteorological Sensors Cost Data

Sensor	Manufacturer	Model	Price	Notes
Present Weather	Optical Scientific	WIVIS/OWI	$ 7,500.00	Optical sensor
	All Weather Inc.	6490	$ 44,515.00	Includes Base Station, Communications Equipment, and shipping
	Coastal Environmental	Laser Drisdometer	$ 4,960.00	Thies model - Already in use at NMA
Soil Moisture Probe	Campbell Scientific	Sentek EnviroSMART (FDR)	$ 2,182.00	Includes access tubes, 61 meters of cable
	Campbell Scientific	Sentek EnviroSMART (FDR)	$ 3,786.00	Includes access tubes, portable datalogger CR215
	MESA technologies	TRIME Tube Access TDR meter	$ 9,433.00	Includes Data Pilot, access tubes and auger set
	MESA technologies	TRIME TDR-EZ TDR Probe	$ 1,450.00	Access tubes, auger set not included. Only 5 meters of cable
	Coastal Environmental	Water Content Reflectometer	$ 1,857.00	Does not include cable $6.50/meter. Need three 30cm probes (quoted) for required depth
Mobile Automatic Weather Station	Campbell Scientific	Custom	$ 4,925.00	Includes CR1000 datalogger
	Coastal Environmental	Zeno Weather Station	$ 7,095.00	Includes datalogger and software
	Vaisala	WXT510	$ 2,320.00	No datalogger, does not measure solar radiation or soil temp
	All Weather Inc.	TAMS	$ 18,771.00	Includes Radio Communication and shipping
Tethersonde	Vaisala	DigiCORA tethersonde sys.	$ 65,000.00	Does not include sondes
Radiosonde	Coastal Environmental	GPSonde	$ 41,664.00	Might not record NO2, SO2; sondes are one time use, does not include balloons
Air Pollution Monitoring	Air Instruments and Measurements	AIM 8500	$ 41,990.00	

PRESENT WEATHER SENSORS

Preliminary Quotation

ZENO® Weather Station

A Versatile, Professional Weather Station Designed for Ease of Use and Future Upgrade.

Coastal Environmental Systems, Inc.
820 First Avenue South ♦ Seattle, Washington 98134
www.CoastalEnvironmental.com

Quotation Number: KP - - *Rev.Date:* *PRICES GUARANTEED FOR ONE YEAR*

PREPARED FOR:
Roger Denick
Burgess & Niple
5085 Reed Road
Columbus, OH 43220
RDenick@burnip.com

PREPARED BY:
Kelly Paletta, Products Manager
800-488-8291 x170
kpaletta@CoastalEnvironmental.com

TERMS: Net 30 (OAC)
STANDARD DELIVERY: 30 - 60 Days ARO
SHIPPING: Prepaid/Add, FOB Seattle, WA

Part Number	Weather Station Data	Commercial Price	Net Price
S1034	ZENO®-3200 Datalogger - w/Housing and Wiring Panel * 32-bit microcontroller, Motorola 68332, 16MHz, Full floating point arithmetic, 16Kb data storage memory * 14 single-ended analog inputs (7 differential) 18 bit resolution, 1-90 samples per second sofware selectable * 2 single-ended, 12 bit resolution input channels * 8 user configurable digital input channels * 6 general purpose digital input/output channels * 1 tipping bucket rain gauge input * Switched excitation AND switched power outputs * Hardware AND Software watchdog timer and power monitor * Real-time clock, battery-backed * Universal Serial Interface	1,205.56	1,130.99
S1214Z	ZENO®-3200 Full Serial I/O Ports, up to 5 serial ports depending on configuration and FREE Universal Serial Interface - configurable on any port in single or multi-drop mode	236.84	223.88
1288	ZENOSOFT® - Operating system software for ZENO®-3200. Contains menus and parameter setups for sensors, processes and data outputs.	247.37	233.83
S1122Z	CABLE - communications cable for ZENO®-3200 to PC DB9 to DB9, w/adapter, Std.	38.89	36.48
S1036	MEMORY - ZENO®-3200, 1-Mbyte Option of SRAM	178.40	169.06
S1329	MET-EXPERT Firmware: The ZENO - 3200® examines data from each and every sensor to detect common faults and ensure that the sensor is operating within range. If it is not, an alarm message is sent out and logged in the data.	477.89	451.73
S1027ZA	ENCLOSURE - ZENO®-3200, NEMA-4, Fiberglass, for agricultural stations, includes back plate and marine grade feed-throughs for up to 4 sensors	422.22	396.11
S1104Z	SENSOR - Wind Monitor speed, direction, gust, much more...- Prop and vane style	866.67	813.06
S1276Z	SENSOR - Relative humidity and air temperature, +/-3% and +/- 0.4 degrees C accuracy	742.22	696.31
S1081Z	SENSOR - Barometric Pressure, m/n IC 1220A, ±3 mBars	489.47	462.68
S1068Z	SENSOR - Precipitation, Tipping Bucket 6", resolution 0.01 inch	433.68	409.94
S1282	SENSOR - SOIL temperature, embedded thermistor type	75.56	70.88
S1420	SENSOR - Soil moisture TDR (qty 3 @$619 ea)	2,055.00	1,857.00
S1376Z	SENSOR - Present weather sensor, WIVIS optical sensor	8,000.00	7,505.19
S1114Z	SENSOR - Solar Radiation, m/n LI200SZ, Shortwave ± 10%	498.89	468.03
S1026	POWER SUPPLY - ZENO®-3200, Int, 110 VAC 12 VDC with battery backup, includes charger	231.58	218.90
S1138I	SOFTWARE - INTERCEPT® Enhanced	480.00	456.00
S80021	SPECIAL ENGINEERING SERVICES: Configuration and test	450.00	375.00
S1194ZA	TOWER - Heavy duty, 3 meter, for ZENO®-3200, includes mounting hardware for ZENO® and agricultural	510.53	482.58
	Total:	**$17,640.77**	**$16,457.65**

Continued on following page

Part Number	Selected Options	Commercial Price	Net Price
S1073	ZENO®-3200 Transient Protection, All I/O Lines	342.11	323.38
S9973	SENSOR: Present Weather Laser Drisdometer (Optional substitute for S1[illegible] listed above)	[illegible]	[illegible]

Please Note - Many factors are used to determine the proper solar panel and battery combination for a given system...geographic location, operating temperatures, radio transmission schemes, sampling rate, etc. The solar panel and battery included in this quote is only an example. We will calculate a "power budget" at a later date. When the design is finalized the system may require a different solar/ battery configuration than the one listed here.

205 Perry Parkway
Suite 14
Gaithersburg, MD 20874

Optical Scientific Inc.
(formerly Scientific Technology, Inc.)

301-963-3630 phone
301-948-4674 fax
sales@opticalscientific.com

Home

Environmental Sensors

Atmospheric & Weather Sensors

Company Information

Quality Mission Statement

Contact Us

WIVIS® (Weather Identifier & Visibility Sensor):

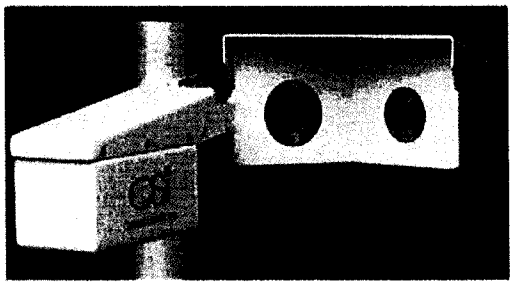

OSi's WIVIS® sensor provides present weather and visibility readings into a very effective combination. This product is our premier road weather instrument. The WIVIS® is widely used by state DOT's across the US and other transportation authorities throughout the world such Japan Highway.

Patented OSi technology uses adaptive environmental algorithms to optimize sensor performance in all weather conditions. OSi has added several new features including WMO codes, automated calibration, and optional hail & ice pellet detection to further enhance sensor performance. WIVIS® analyzes multiple channels of data to calculate the present weather and visibility. This approach recognizes that weather sensing requires a dynamic measurement, continually adapting to the environment at the moment. A new self-compensating algorithm makes field calibration unnecessary for up to 2 years.

WIVIS® reports precipitation occurrence, precipitation type, precipitation intensity, and precipitation accumulation, in a variety of weather codes (NWS / WMO) and units of measure (English / SI) as well as visibility. The WIVIS® is perfect for general weather observation, transportation information, and other similar applications. It is arguably our most successful commercial grade weather instrument.

WIVIS® Advantages:

- Advanced Optical Technology
- Easy Installation
- Reports NWS/WMO formats
- Self Diagnostics & Testing
- Rugged Design
- Long-term Reliability
- Low Maintenance
- Enhanced EMI Protection

WIVIS® Reports:

- Precipitation occurrence
- Precipitation type and intensity

- NWS and WMO codes
- Visibility (MOR)
- English and SI Units

WIVIS® Specifications

WIVIS® Accessories

ORG

OWI

LEDWI

LOA-004

WIVIS® and OWI™ ScTi's Effective, All-Weather Solution for Visibility and Present Weather Observation

ScTi's WIVIS® and OWI™ sensors are the best solution for remote, real-time present weather observation. Both instruments use advanced optical technology to measure precipitation rate and identify precipitation type. The WIVIS® sensor gives you the added bonus of visibility measurement making it the best present weather detector. The OWI™ is ScTi's more affordable alternative with true present weather sensing capabilities.

From Antarctica to Saudi Arabia and Switzerland to Australia, our sensors are relied upon worldwide. The WIVIS® and OWI™ can be found working for universities, state DOTs and municipalities, airports, and many other government agencies. If your needs involve airline safety (in *AWOS* systems), road weather, research, or synoptic observation, ScTi's present weather sensors will do the job.

Advantages of the WIVIS® and OWI™

1) Advanced Optical Technology
2) Rugged Design
3) Easy Installation
4) Long-term Reliability
5) Reports NWS/WMO formats
6) Low Maintanence
7) Self Diagnostics & Testing
8) Enhanced EMI Protection

Advanced Optical Technology

The WIVIS® and OWI™ use the principle of optical scintillation to measure precipitation. This technology has widespread acceptance from many authorities in both weather and environmental sensing including the NWS, FAA, MIT, NASA, USAF, and USGS.

Rugged Design

The WIVIS® and OWI™ have very tough, lightweight frames. The frame can withstand the rigors of almost any climate. Lens heaters keep the optical path clear of ice during wintry weather. The instrument enclosure is rated IP 66.

Easy Installation

Both sensor heads have a U-bolt mounting configuration that allows you to attach the unit to a vertical pole or horizontal bar. (No special mounting pole required.)

Long-term Reliability

ScTi present weather sensors have more than 50 million hours of proven field operation in all climates. MTBF (Mean Time Between Failure) for ScTi present weather instruments is ~35,000 hrs. The WIVIS® and OWI™ operate 24 hours a day, 7 days a week.

Reports NWS/WMO Formats

Both of the sensors use NWS codes as standard & WMO codes as optional.

Low Maintenance

The WIVIS® and OWI™ use proprietary algorithms that eliminate the need for frequent calibration. Field calibration every two years is typical.

Self-Diagnostics and Testing

The WIVIS® and OWI™ have AGC (Automatic Gain Control) to compensate for signal loss. The sensors also employ a comprehensive self-test that updates once per minute and reports any potential problems in the output message.

Enhanced EMI Protection

Both present weather sensors have enhanced EMI protection that allow them to operate in harsh electro-magnetic environments.

No other present weather instruments provide this powerful combination of high technology and proven reliability!

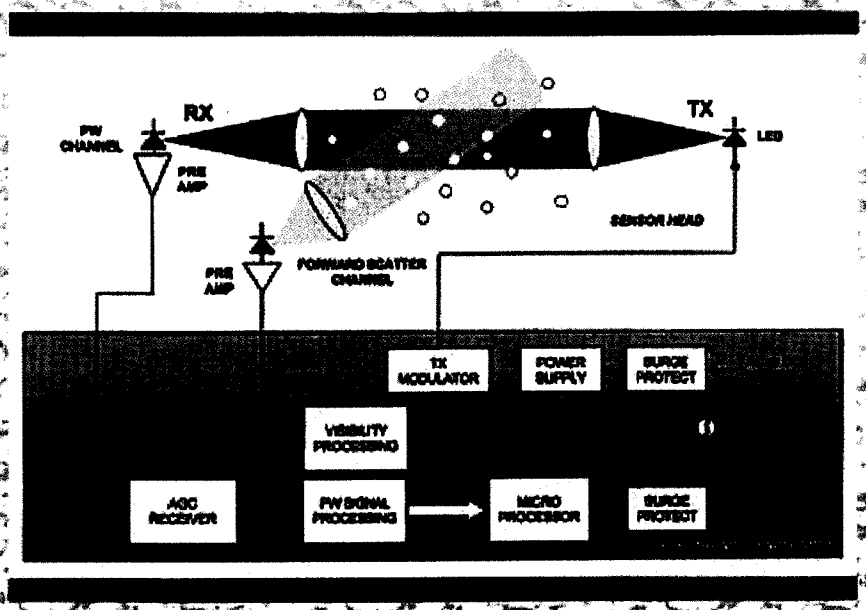

Functional block diagram of the WIVIS® sensor.

WIVIS® Reports:
Visibility (MOR)
Precipitation occurrence
Precipitation type and intensity
NWS and WMO codes
English and SI units

OWI-130-xR WIVIS®
where "x"=
A for 115 VAC, 50/60 Hz
B for 230/240 VAC, 50/60 Hz
C for 100 VAC, 50/60 Hz
D for 12 VDC
E for 220 VAC

WIVIS® Options
HIP-100 Hail/Ice Pellet Sensor: Detects hail and ice (not stand-alone).
QCS-130 Qwik Collect Software: Collects, displays, and archives data (compatible w/all Windows systems).
TST-130 Field Test Kit: for testing & verification of calibration.
LDM Limited Distance Modems: for distances > 100 ft. (max = 7 miles).
OWI-131/132/133 WIVIS Kit: w/o enclosure (user can use their own box).

OWI™ Reports:
Precipitation occurrence
Precipitation type and intensity
NWS and WMO codes
English and SI units

OWI-120-xR OWI™
where "x"=
A for 115 VAC, 50/60 Hz
B for 230/240 VAC, 50/60 Hz
C for 100 VAC, 50/60 Hz
D for 12 VDC
E for 220 VAC

OWI™ Options
HIP-100 Hail/Ice Pellet Sensor: same as WIVIS option above.
QCS-120 Qwik Collect Software: same as above.
TST-130 Field Test Kit: see above.
LDM Limited Distance Modems: see above.
OWI-121/122 OWI Kits: w/o enclosure.

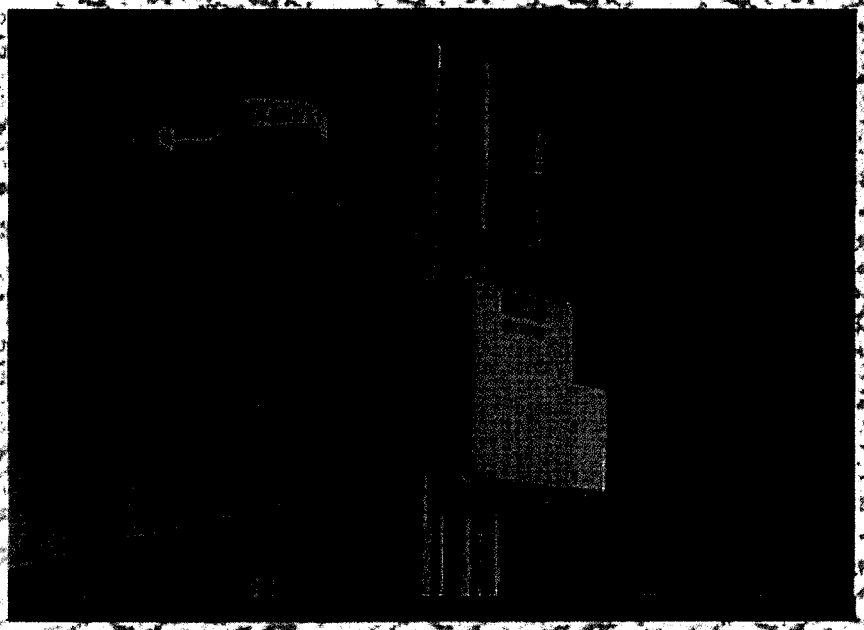

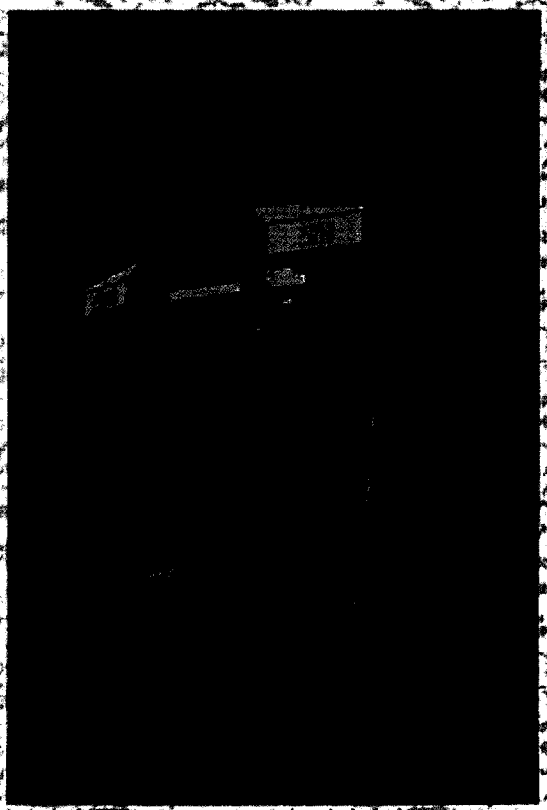

Top: WIVIS® sensor provides weather readings to an ITS system.

Left: When visibility is not required, the OWI™ is great for present weather detection.

Optical Scientific, Inc.

Present Weather Sensor Specifications

Performance Specification	WIVIS	OWI
Present Weather		
Present Weather Codes	More than 50 NWS and WMO (optional) codes	More than 50 NWS and WMO (optional) codes
Present Weather Type Identification	Rain, Snow, Drizzle, Mixed, Hail*, Ice Pellets*	Rain, Snow, Drizzle, Mixed, Hail*, Ice Pellets*
Sensor Data Update Rate	Once per minute	Once per minute
Rain		
Rain Dynamic Range	0.1 to 3000 mm/hr	0.1 to 3000 mm/hr
Rain Accumulation	0.001 to 999.999 mm	0.001 to 999.999 mm
Rain Accuracy	5% Accumulation	5% Accumulation
Rain Resolution	0.001 mm	0.001 mm
Snow		
Snow Dynamic Range	0.01 to 50 mm/hr water eq.	0.01 to 50 mm/hr water eq.
Snow Accumulation	0.001 to 999.999 mm water eq.	0.001 to 999.999 mm water eq.
Snow Accuracy	20% Accumulation (depends on snow density)	20% Accumulation (depends on snow density)
Snow Resolution	0.001 mm	0.001 mm
Visibility		
Visibility Dynamic Range	0.001 to 3 km (10 & 50 km optional) 0.001 to 1 mile (7 & 30 miles optional)	N/A
Visibility Accuracy	20% up to 3 km	N/A
Visibility Time Constant	5 minute harmonic	N/A
Visibility Contrast Threshold	5%	N/A

*With optional HIP-100 Sensor Attachment

Electrical Specification	WIVIS	OWI
Power Requirements	110 VAC, 50-60 Hz, 50 VA Others available	110 VAC, 50-60 Hz, 40 VA Others available
Fusing	User Supplied 1.0 A Slow Blow	
Signal Output	RS-232 ACSII	RS-232 ASCII
Transient Protection	All power and signal lines protected	

Environmental	WIVIS	OWI
Temperature	-40° to 50°C (-40° to 122°F) -55° to 55° C optional	-40° to 50°C (-40° to 122°F) -55° to 55° C optional
Humidity	0-100%	0-100%
Precipitation/Dust	NEMA-4 type protection	NEMA-4 type protection

Physical	WIVIS	OWI
Head Size	740mm W x 118mm H x 250 mm D	740mm W x 118mm H x 250 mm D
Head Weight	4.5 kg	4.5 kg
Enclosure Size	305mm W x 465 mm H x 230 mm D	305mm W x 465 mm H x 230 mm D
Enclosure Weight	11 kg	11 kg

File: OWI-WIVIS Specifications.doc -- rev 01/04/03

301-963-3630 phone • 301-948-4674 fax • 205 Perry Parkway, Suite 14 Gaithersburg, MD 20877-2141 USA • www.opticalscientific.com

Precipitation

Thies CLIMA

The new generation of high quality and reliable precipitation identification sensor

Laser precipitation monitor (Disdromete

State of the art technology with best cost-performance ratio

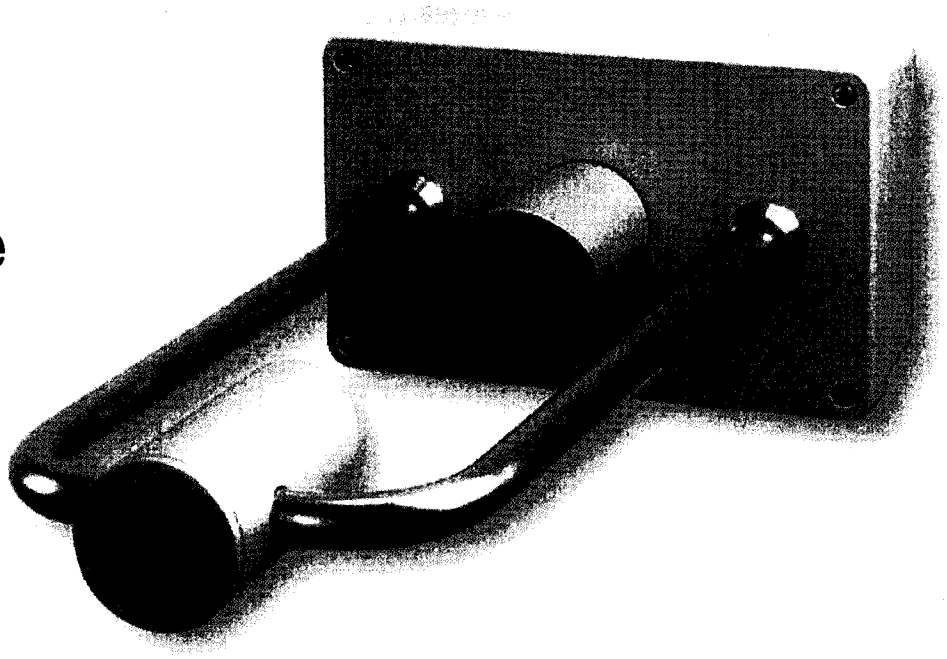

The Thies Laser Disdrometer is especially designed for the use in several applications. The optical laser basing measuring principle guarantees a reliable and accurate measurement of all known kinds of precipitation. It is possible to measure the amount, the intensity also as the particle size and the velocity of precipitation. A main advantage of the disdrometer is to measure particles down to 0,16 mm diameter.

The disdrometer detects and discriminates the different arts of precipitation as drizzle, rain, hail, snow, snow grains, graupel (small hail / snow pellets), and ice pellets with his reliable Laser optic.
The disdrometer calculates the intensity (rain rate), volume and the spectrum of the different kinds of precipitation and makes necessary plausibility checks.
Latest state of the art technology like DSP, and high quality optical components stand for safely measurement.
All data will be transmitted via a galvanic isolated RS485 interface to further systems with different protocols and formats. SYNOP according table 4680, and METAR according table 4678 are implemented.

Typical applications		The main advantages in one view
• traffic control • meteorological monitoring		• rugged, compact, and light • nearly maintenance-free • easy mounting

- scientific examination
- airport observation systems
- hydrology

Also for use in harsh environmental conditions

- DSP for computing power
- EMC protected housing
- particle size from 0,16 mm diameter
- extended heaters for use in harsh environmental conditions

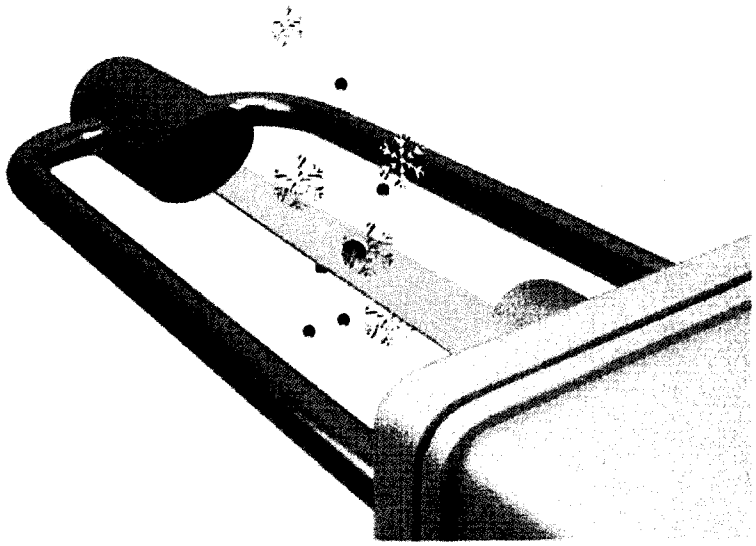

The disdrometer is nearly maintenance- free, and the optical components are secured against environmental influence. Integrated heaters guarantee a reliable use all over the year.
A special technology eliminates a possible influence of extrinsic light. The disdrometer controls itself via different features in order to compensate temperature and dirt influences. For communication the RS 485 output as well as two digital outputs are available.
In order to integrate other important meteorological parameters, the disdrometer is prepared to connect additional sensors like wind speed, wind direction, temperature and humidity.
All measured values will be transmitted via the RS485 output.
The use of flash memory allows remote software uploads.

Laser precipitation monitor, Ordercode: 5.4110.00.000

Main characteristics

Principle of operation	Laser 785 nm, max 0,5 mW optical power, Laserclass 1M
Measuring area	45 cm² (22.5 x 2.0 cm), 7 inch² (8.858x 0.787 inch)
Environmental	-40...+70°C; 0 ..100% rH, Optional –60...+70°C; 0...100%rH
Protection	IP 65
Mounting	Mast 48 mm...102 mm; 1.9...4 inch
Power	24 V AC /750 mA, alternative 230 VAC or 115 VAC incl. std. heaters
Housing	al, die cast, stainless steel, 270x 170x 540 mm

Weight	4.8 kg
Data output	RS485 1200...115200 Bd, full duplex 2 opt. coupler 24 V DC 1 mA
Optional inputs	PT100, 0-1 V, 0-1000 Hz, serial synchronous
Precipitation	
Particle size	0.16....7 mm
Particle velocity	0.2 ... 20 m/s
Distinction for kind of precipitation drizzle, rain, hail, snow	> 97 % in compar. with synopt. observer
Minimum intensity	0.005 mm/h drizzle
Maximum intensity	250 mm/h

Info Home

allweatherinc

Advanced Weather
Reporting For An
Unpredictable World

1165 National Drive
Sacramento, CA 95834

Tel (916) 928-1000
Fax (916) 928-1165
EMAIL sglander@allweatherinc.com
http://www.allweatherinc.com

Date: **June 6, 2005**

Quotation # : **111668**

To: **Burgess & Niple**
5085 Reed Rd.
Columbus, OH 43220

Valid for 90 Days

TERMS: **Per Attached All Weather Inc Terms and Conditions of Sale**

Attn: Roger Denick (rdenick@burnip.com)
Fax#:
Phone#: (614) 459-2050

PRESENT WEATHER DATA SYSTEM QUOTATION
(International)

PRESENT WEATHER SATELLITE FIELD STATION (quantity 1) (Quantity discounts will apply)	**$ 26,260**
PRESENT WEATHER BASE STATION	**$ 18,255**
SUB-TOTAL	**$ 44,515**
PACKING, HANDLING & L/C CHARGES	**$ 1,169**
INLAND FREIGHT CHARGES	
FREIGHT TO (Air Freight is estimate, actual cost will be billed)	**$ -**
INSURANCE	**$ -**
System Total, Ex-Works, All Weather Inc, Sacramento:	**$ 45,684**

NOTES: **Civil Works, shipping charges and applicable taxes are the buyer's responsibility unless other arrangements are made.**

If you place an order based on this quote, please ensure you include a reference to the Quote Number on your P.O.

Delivery is in accordance with INCOTERMS 2000

Delivery is approximately 90-120 Days ARO at the time of this quotation. Call/FAX to confirm.
Submitted this Date By:

Steve Glander

PRESENT WEATHER SATELLITE FIELD STATION (quantity 1):

Qty	Part Number	Description	Unit Price	Total
PRESENT WEATHER (PRECIPITATION IDENTIFICATION) SYSTEM				
1	6490	Present Weather Sensor	$ 18,720	$ 18,720
1	M488176	Mounting Bracket	$ 125	$ 125
DATA ACQUISITION				
1	1190-I	Data Acquisition and communications Unit	$ 3,082	$ 3,082
1	11902-A	UHF Radio Datalink Kit 450 - 470 Mhz	$ 2,325	$ 2,325
1	Z005127	Antenna, Yagi	$ 100	$ 100
1	M491541	25ft Cable	$ 83	$ 83
1	M488131	Solar Power Kit - 50W Includes: Mounting Hardware; Charge Controller; 50 W Solar Panel, 100 AH Battery; Battery Enclosure	$ 1,825	$ 1,825

PRESENT WEATHER BASE STATION:

Qty	Part Number	Description	Unit Price	Total
1	2090-I	Central Data Processor (CDP), with: Includes: 17" Color LCD Flat Panel Screen, Stormfront Display Software Keyboard, Mouse, 2-Button w/PS2 Connector, Mouse Pad	$ 6,785	$ 6,785
1	M406126-00	Laser Printer A4	$ 1,755	$ 1,755
1	11902-A	UHF Radio Datalink Kit 450 - 470 Mhz	$ 2,325	$ 2,325
1	Z005127	Antenna, Yagi	$ 100	$ 100
1	M491541	25ft Cable	$ 83	$ 83
ENGINEERING CONFIGURATION, SYSTEM SOFTWARE & DOCUMENTATION				$ 6,457

SYSTEM INTEGRATION AND TEST $ 750

System Total, Ex-Works, All Weather Inc, Sacramento: $ 44,515

OPTIONAL DATA COMMUNICATIONS VIA CELLULAR MODEM

Quantity	Part Number	Description	Unit Price	Total
2	M406152-00	Cellular Modem	$ 1,200	$ 2,400

Present Weather Field Station Network for Romania
System Description Summary

Field Station:

Equipment:

- Present Weather Sensor
- Data Collection Electronics
- Communications Hardware
- Solar Power

Functions:

- Sense and Report Precipitation Identification (Precipitation type, amount, rate, and sensor status)
- ASCII data output each minute
- Configurable data logging capabilities
- Wireless data transmission
- Removable data storage

Base Station:

Equipment:

- Central Data Collection Processing Computer
- Laser Printer
- Communications Hardware

Functions:

- Stormfront Graphics Display Software (Graphs, Charts, Clickable map, etc.)
- Printing capability
- Data retrieval from 1 to N field stations
- Database storage
- Configurable Data Display Screen
- Wireless data transmission
- Customizable Reports

1. INTRODUCTION

1.1 *The Model 6490 Sensor Improves Your Ability to Measure Present Weather*

The Model 6490 optically measures precipitation induced scintillation and applies algorithms to automatically determine the precipitation occurrence, type, rate. The sensor is vastly superior to traditional type sensors and offers the reliability and proven performance you need.

All Weather Inc.'s Model 6490 precipitation sensor provides accurate measurement of precipitation in all weather conditions. Designed for rugged, unattended operation, these sensors have been field proven in adverse environments around the world in locations such as Antarctica, Europe, the Far East, and North America.

The 6490 offers many features and options including:

- ✓ NWS or WMO weather code formats
- ✓ English or metric units of measure
- ✓ Past data (15 min and 60 min)
- ✓ Automated calibration
- ✓ HIPS Hail and ice pellet detection (option)
- ✓ 12 VDC power (option)

1.2 *Performance Specifications for the Model 6490*

The 6490 was designed to measure precipitation in all weather conditions. The general specifications of the sensor are provided in the table below. The exact specifications may vary depending on the firmware and options provided with the unit.

Performance Specification	
PRESENT WEATHER	
PW Codes Reported	More than 50 NWS & WMO codes
Rain Dynamic Range	0.1 to 3000 mm/hr
Rain Accumulation	0.1 to 999.999 mm
Rain Accuracy	5% Accumulation
Rain Resolution	0.001 mm
Snow Dynamic Range	0.01 to 300 mm/hr water eq.
Snow Accuracy	10% Accumulation
Snow Resolution	0.001 mm
Hail & Ice Pellet Accuracy	Correctly report 90% of the time
Data Update Rate	Once per minute

N o t e: The Hail & Ice Pellet Sensors (HIPS) is optional - ignore references to hail and ice pellets unless the option was ordered!

Electrical Specifications	
Power Requirements	Factory selectable 110/220 VAC, 50/60 Hz @ 50 VA (12 VDC @ 3 A power supply optional)
Fusing	User supplied - See Section 2.3.2 for fuse size
Signal Output	RS-485 ASCII 4800 baud, 8 data bits, no parity, 1 stop bit
Transient Protection	AC power and RS-485 signal lines fully protected

Environmental Specifications	
Temperature	-40 to 55° C (-40 to 131° F)
Humidity	0-100%
Precipitation/Dust	NEMA-4X type protection

Physical Specification		
Size -	Sensor Head	730 mm W x 115 mm H x 230 mm D
	Electronics Enclosure	305 mm W x 465 mm H x 210 mm D
	Hail & Ice Pellet Head	865 mm W x 90 mm H x 216 mm D
Weight	Sensor Head	4 kg including cables
	Electronics Enclosure	10 kg
	Hail & Ice Pellet Head	2.3 kg including cables
Cable Lengths -		
	Sensor Head	5 meter (up to 10 m optional)
	Hail & Ice Pellet Head	1.5 meter

PORTABLE SOIL MOISTURE SENSORS

Wednesday, June 08, 2005

Roger Denick
rdenick@burnit.com
614-459-2050

MESA is pleased to quote you the following TRIME products:

Description	Item Number	Qty	Unit Price
TRIME-Tube Access Probe with intelligent probe head: T3-44-IPH type T3 and TRIME Intelligent Probe Head with TDR electronics: RS-232 Serial interface, **5-meters** of Teflon coated cable and mating connector, programmable. For use in TRIME standard access tubes, mates with TRIME Data Pilot.	303001+ 300009	1	$4695.00
TRIME Data Pilot for Data Management of TRIME TDR probes: Field portable system using customers supplied Compaq iPAQ with 32-MB memory. NiCd 9.6 V/1000 mAh rechargeable battery. RS232/24V connection for TRIME probes, USB for data transfer between PC and Data Pilot, TRIME data management (Window CE software), Aquapac weatherproof vinyl case with shoulder strap	99200	1	$2779.50
HP iPAQ pocket PC (customer supplied)	n/a	1	~$400.00
TRIME 44-mm access tube 1-m long (plastic cutting head, expandable tube-bottom stopper, gasket, cap) (p/n TT-44-1)	TT-44-1-P	1	$31.00
Complete Auger Set for TRIME 44-mm for 1-meter long access tubes, Includes: screw auger handle with bit and stopper socket, 1-meter long steel guide, Ramming head, Nylon head protector, Tripod with clamping device (p/n TAS-44)	303021	1	$1435.00

Terms and Conditions:

Delivery: 4 weeks ARO
Payment: Credit Cards: MC, VISA, Net 30 days with approved credit.
Pricing: Valid for 60 days.
FOB point: Medfield, MA 02052-1507
Federal Tax ID Number: 04-3125128
Warranty: One-year parts and Labor

MESA Systems Co.

John Kussmann
John.kussmann@mesasystemsco.com

Thursday, May 12, 2005

Roger Denick
rdenick@burnit.com
614-459-2050

MESA is pleased to quote you the following TRIME products:

Part Number	Product Description	Unit Price US Dollars
T-EZ	TRIME-EZ Intelligent TDR Probe: 7...14 V dc power required, IMP 232 MICRONET interface, RS232 serial & analog output 0...1 V, (5-meters of cable & mating connector) 160-mm probe rods	$1100.00
T-ASC	TRIME RS-232 / Analog data and power connector cable 1.5 meter	$225.00
T- PRS	Preparation rod set for TRIME EZ, Two SS rods and	$125.00

Terms and Conditions:

Delivery: Stock to 4-weeks ARO
Payment: Credit Cards: MC, VISA or Net 30 days with approved credit.
Pricing: Valid for 60 days.
FOB point: Medfield, MA
Federal Tax ID Number: 04-3125198
Warranty: One year parts and Labor

MESA System Co.

John Kussmann
John.kussmann@mesasystemsco.com

MESA Systems Co.

6 West Mi
3
Medfield,
USA
Tel. 508-3.
Fax. 508-3

TRIME EZ (EZC) Intelligent TDR probe

Spec Sheet Back

- Measure direct %vol soil water content
- Advanced TDR automatic curve-analyzing electronics
- 0...100% vol soil water-content measurement
- Reliable multi-point digital/serial networking
- Bulk soil electrical conductivity up to 50dS/m

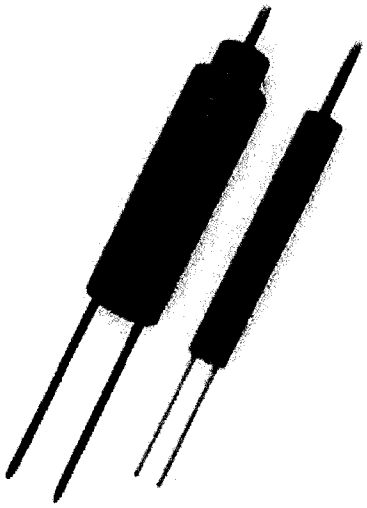

The intelligent rod probes are highly sophisticated and extremely robust. A unique feature is the integrated TDR measuring electronics in the probe's body, achieving the greatest accuracy possible. With sensor, integrated networking capability cable lengths of up to 2 km are possible when connecting the IMP-Bus version.

Select from a variety of rod lengths, for different measuring volumes and for applications in highly saline conditions. Power and timing can be controlled on-line to conserve power consumption. The TRIME-EZ requires only 8 mA stand-by and 250 mA during the 10 seconds measuring time.

The TRIME-EZ is the standard probe for materials with bulk electrical conductivity of up to 2dS/m.

TRIME-EZC is designed for measuring in highly saline media: up to 8dS/m bulk EC.

When connected to the **TRIME DATA PILOT** the TRIME EZ measured data can be managed in the field. The Data Pilot runs the TRIME EZ using the RS-232 serial interface.

The TRIME-EZ features interfaces for power supply and IMP232-micronet Databus for data acquisition and communications. Optional configurations offer a RS232/V24 interface for connecting a MS-dos-based PC/portable and the external power supply (7..15V dc @ 280 mA). You can also add an analog output 0..1V or 0(4)..20 mA for interfacing to external devices e.g. data logger.

TRIME EZ (EZC) Intelligent TDR probe

FEATURES	TECHNICAL DATA
Power Supply:	7V....15 V dc
Current:	8-mA standby, 250 mA at 12 V dc for 10...15 seconds during measurement
Accuracy: Range 0...40%: Range 40...70%:	TRIME-EZ (EZC) +/-1% (+/-2%) +/-2% (+/-3%)
Repeatability	+/-0.5% of calibration
Bulk electrical conductivity:	TRIME-EZ (EZC) 0...2dS/m (0...8dS/m)
Pore water electrical conductivity:	TRIME-EZ (EZC) 0...10dS/m (0...45dS/m)
Cable length:	5-meters with mating connector
Temperature operating range:	-15 C...50C (extended range on request), Maximum drift .+/-0.5%
Ouptput and interface:	IMPbus, (4-20mA and RS-232 optional)

MESA Systems Co.
6 West Mill Street, Unit 3
Medfield, MA 02052
USA
Tel. 508-359-5322
Fax. 508-359-5339

MESA Systems Co.

6 West Mi
3
Medfield,
USA
Tel. 508-3.
Fax. 508-3

T3/T3C Tube Access Probe (44mm)

- Water content profiles to a depth of 3 meters
- Monitor any number of access tube sites with one portable system
- Free yourself from hazardous radioactive materials restrictions
- Easy to install robust plastic access tubes Portable Moisture Meter, Versions FM2 and FM3
- Water content profiles to a depth of 3 meters
- Fast, reliable and portable measuring of volumetric moisture

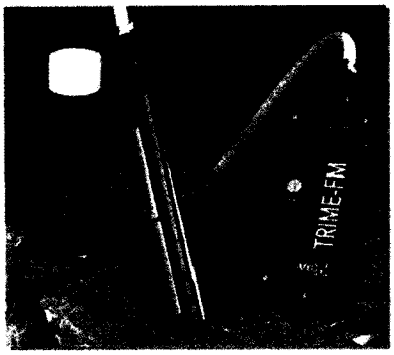

Specifications

The TRIME-TDR tube access probe is the first and only system designed especially for vertical water content profiling. For the first time rapid, non destructive measurements of water content profiles are possible without the use of hazardous radioactive materials.

The tube access probe consists of a cylindrical PVC-body, which has four spring-mounted, curved aluminum plates located on opposite sides of the probe body. Each set of plates function as TDR-wave guides (like a traditional rod-probe), that presses against the inside of the access tube once the probe is inserted. The tube access probe is designed to measure from the inside of the special TECANAT plastic access tubes. The tube access probe easily slides up or down the access tube to the location where a measurement is to be made. The tubes may be left in the soil and/or removed. Access tube installation is conveniently accomplished using a specially developed auger/drilling tube insertion set. Accessories for stopping the tube bottom and capping the tube top are standard. Other insertion methods are also possible. We paired with a TRIME-FM the maximum available length of probe cable is 3.5 m. For longer lengths contact MESA.

Measuring Volume

The effective vertical penetration height of the tube access probe is approximately 15 cm, (analogous to the length of a 15 cm rod probe). Penetration depth, into the soil is on average 6 cm, having it's greatest sensitivity in the immediate vicinity of the access tube outer diameter and decreases exponentially with distance. For precise description, please refer to the "comments on the tube access probe".

Accuracy

A measuring accuracy of ±2 vol.% can be achieved, provided no air gaps exist between soil and TECANAT access tube. Close soil tube contact is very important and can be ensured by a careful installation of the access tubes using our auger equipment. The TRIME tube access probe is suitable for soils with bulk soil electrical conductivity up to 1 dS/m.

Comments

The T3 auger set for the installation of the access tube into soils represents the best compromise between achieving close contact with the soil and minimizing soil compression. The TRIME-T3 probe has found success in other non-soil applications.

TRIME tube access probe is also available with the Intelligent Probe Head (IPH). Together the tube access probe and IPH becomes a down tube system with integrated electronics. This allows for cable lengths of up to 25 meters with the option of being networked or operated by the battery powered hand-held analog display unit TRIME-HD.

TRIME-T3 tube access probe together with the TRIME-FM3 Field moisture meter.

The TRIME-FM is a truly portable field-measuring device for % volumetric moisture measurement in soils and other porous materials. When combined with one of the broad selection of probes, the TRIME-FM is ideal for many demanding applications including highly saline materials.

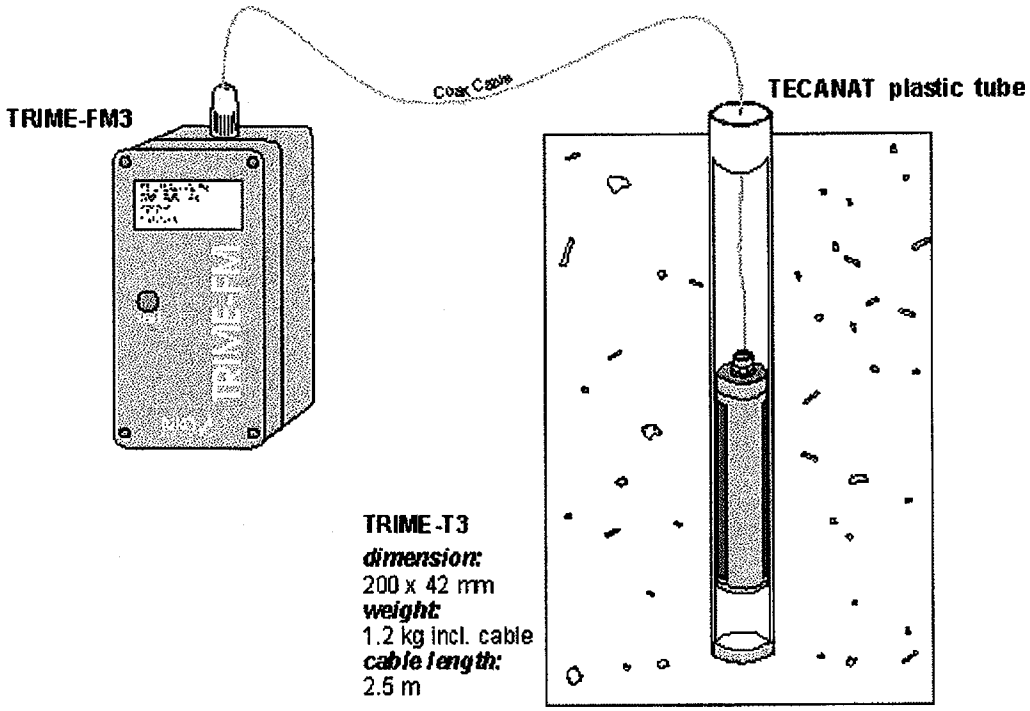

MESA Systems Co.

6 West Mi
3
Medfield,
USA
Tel. 508-3.
Fax. 508-3

Auger set for 44-mm access tubes

- Designed for optimum access tube - soil contact
- Minimum disturbance of soil structure and texture
- Field-proven compact and easy to work with
- Completely self-contained with flexible probe options

A special drilling set for access tube installation in homogeneous soils has been developed by TRIME. The system offers the best compromise between achieving a close contact and a minimum of soil compression.

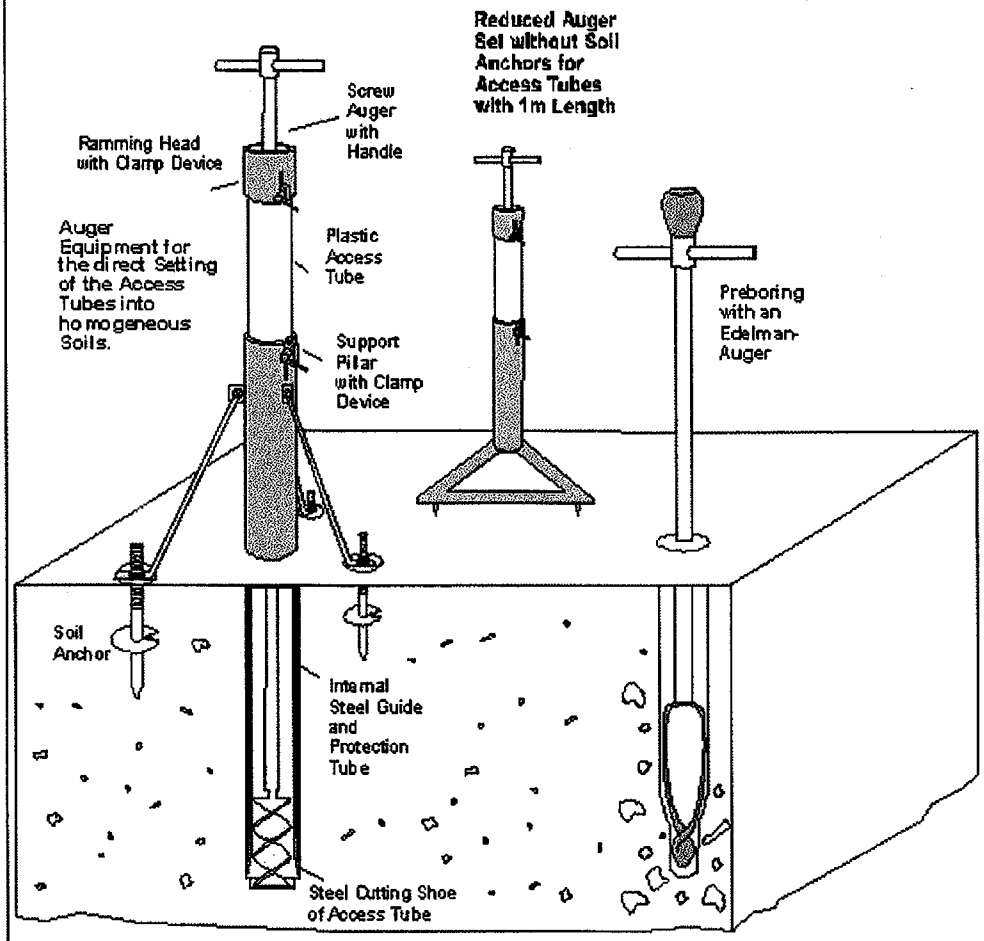

The TRIME auger equipment consists of:

- An access tube support pillar with three soil anchors
- A ramming head with clamp device
- A screw auger with handle
- An internal steel guide/protection tube

A small version of the support pillar without anchors is also available for 1-meter access tubes.

The screw auger is used to drill out soil. After the soil is removed, the tube can be easily hammered into the soil. This cycle is repeated until the tube is sunk to the appropriate level. The internal steel protection tube is then removed and the access tube is sealed with a rubber stopper and cap.

With the described auger equipment, it is possible to set the access tubes directly into homogenous soils without pre-boring. The more skeletal the soil becomes, the more difficult the sinking gets. In this case, we suggest pre-boring with an Edelman auger or pneumatic soil-sampling device prior to installing the tubes. Other methods have also been used successfully.

MESA Systems Co.

6 West Mi
3
Medfield,
USA
Tel. 508-3.
Fax. 508-3

TRIME Data Pilot

The TRIME Data Pilot is an easy to use field portable data management devices based on our custom software and the Compaq iPAQ Pocket PC running Windows CE. Designed for field data management, right at the time of measurement with a clear graphical user interface. If you collect a lots of data points you can have fast and accurate soil moisture measurements data without pencil and paper.

Connect to any TRIME device including: TRIME-IPH, TRIME-FM, TRIME-ES and TRIME-EZ/IT using the RS-232 interface. The serial format provides the means for directly extracting the recorded moisture readings with the TRIME-Data-Pilot and storing them in a file. Incorporate site-specific data, written comments even verbal notes can be recorded directly into the Data Pilot, on location.

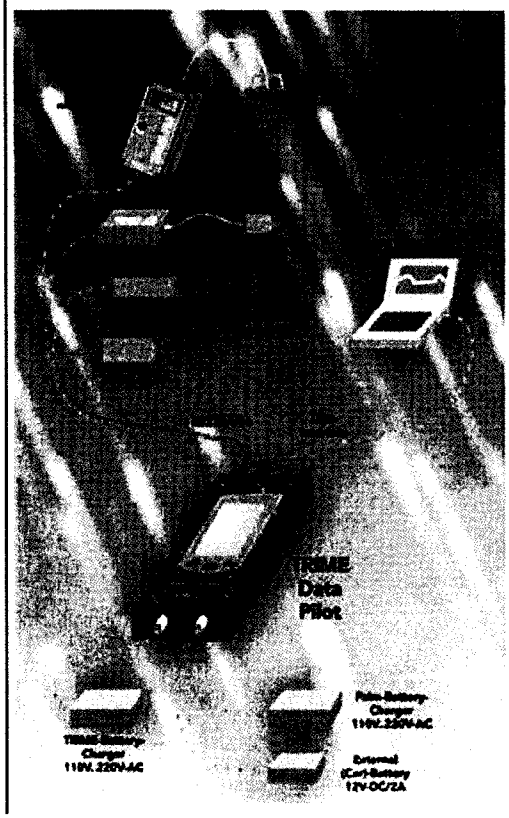

The standard menu structure on the Palm-PC is as shown in the following example:

Meas.-Point 27: Position X, Hillside, Depth: 1meter
Date/Time: 19.03.2001 14:23
Moisture: 25,4%
TDR-Level: 65

Using Windows-CE, the recorded data can be easily analyzed with MS-EXCEL. The Palm-PC provides the USB interface as the standard for the transfer of data.

The Palm includes a flexible protective Palm / Battery-Case that ensures that the TRIME-Data-Pilot works reliably even in damp and wet surroundings.

Specific TRIME probes can be operated directly from the TRIME-Data-Pilot by installing an additional battery inside the Data-Pilot's case.

Features

- **Attractive graphic user-interface**
- **Create up to 999 measurement location files**
- **Data can be imported to EXCEL**
- **Connectable to TRIME-IPH, TRIME-EZ/IT, TRIME-ES, TRIME-FM**
- **Convenient RS-232 serial interface**

TRIME Data Pilot

Palm-PC	Compaq iPAQ incl. PC-Card-Jacket and 8MB Flash-Card
Power Supply	Internal iPAQ Li-Ion Battery for 6 hours running time. TRIME-Battery NiCd 9.6V/1000mAh for 400 TRIME measurement cycles.
Charging	1 x original iPAQ Charger 110..220VAC 1 x TRIME-Battery-Charger 110..220VAC
Interfaces	1 x RS232/V24 for connection to the TRIME-probe. 1 x USB for the data transfer with the PC
Software	Data-Management-Software developed by IMKO
Water-Protection	IP65, NEMA 12, flexible housing. All connectors have IP67 protection.
Dimensions	250x170x60mm

MESA Systems Co.
6 West Mill Street, Unit 3
Medfield, MA 02052
USA
Tel. 508-359-5322
Fax. 508-359-5339

Thursday, May 12, 2005

Roger Denick
rdenick@burnit.com
614-459-2050

MESA is pleased to quote you the following TRIME products:

Part Number	Product Description	Unit Price US Dollars
T-EZ	TRIME-EZ Intelligent TDR Probe: 7…14 V dc power required, IMP 232 MICRONET interface, RS232 serial & analog output 0…1 V, (5-meters of cable & mating connector) 160-mm probe rods	$1100.00
T-ASC	TRIME RS-232 / Analog data and power connector cable 1.5 meter	$225.00
T- PRS	Preparation rod set for TRIME EZ, Two SS rods and	$125.00

Terms and Conditions:

Delivery: Stock to 4-weeks ARO
Payment: Credit Cards: MC, VISA or Net 30 days with approved credit.
Pricing: Valid for 60 days.
FOB point: Medfield, MA
Federal Tax ID Number: 04-3125198
Warranty: One year parts and Labor

MESA System Co.

John Kussmann
John.kussmann@mesasystemsco.com

CAMPBELL SCIENTIFIC, INC.

815 W 1800 N · Logan, UT 84321-1784 · USA · (435) 753-2342
FAX (435) 750-9540 · www.campbellsci.com
Fed. I.D. #87-0305157 · DUNS#06-798-0730

* Please reference our Quote number on your Purchase Order *

PROFORMA INVOICE **PRICE QUOTATION**

Quote Number: 47727
Quote Date: 31-MAY-05
Page: 1 of 4
Valid Through: 30-JUL-05

USER ADDRESS:
ROGER DENICK
BURGESS & NIPLE
5085 REED RD
COLUMBUS, OH 43220

TEL: (614) 459-2050
FAX: (614) 451-1385

RFQ#	Terms	Freight Terms	Est. Ship Date	CSI Contact
	UPON APPROVAL	PREPAID & ADD	30 DAYS ARO	DAVE MEEK

Line	Item	**CO	Description	Qty Ord	Unit	Selling Price	Ext. Price
1	NOTE		- - !!! PRELIMINARY !!!	1	EACH	0.00	0.00
2	NOTE		- - ---WEATHER STATION---	1	EACH	0.00	0.00
3	NOTE		- - ---W/ WIRED WATER CONTENT PROBES---	1	EACH	0.00	0.00
4	NOTE		- - ---WEATHER SENSORS / MOUNTS---	1	EACH	0.00	0.00
5	03001-L	US	03001-L RM YOUNG WIND SENTRY SET	1	EACH	575.00	575.00
5	9661	US	CABLE 22 AWG 1 TWISTED PAIR SANTOPRENE	11	FEET	0.30	3.30
5	9720	US	CABLE 22 AWG 2 TWISTED PAIR SHIELDED SANTOPRENE	11	FEET	0.54	5.94
6	019ALU	US	019ALU ALUMINUM SENSOR CROSSARM W/MOUNTING HARDWARE	1	EACH	86.25	86.25
7	LI200X-L	US	LI200X-L LI-COR PYRANOMETER (FIXED CALIBRATION)	1	EACH	333.50	333.50
7	9661	US	CABLE 22 AWG 1 TWISTED PAIR SANTOPRENE	11	FEET	0.30	3.30
8	LI2003S	US	LI2003S LI-COR PYRANOMETER BASE & LEVELING FIXTURE	1	EACH	69.00	69.00
9	025STAND	US	025STAND PYRANOMETER CROSSARM STAND	1	EACH	69.00	69.00
10	18008	FI	HMP50-L VAISALA TEMPERATURE/RH PROBE	1	EACH	385.25	385.25
10	18159	US	CABLE 24 AWG 4 CONDUCTOR SHIELDED SANTOPRENE	6	FEET	1.12	6.72
11	4020	US	41303-5A RM YOUNG 6-PLATE GILL SOLAR RADIATION SHIELD	1	EACH	115.00	115.00

AUTHORIZED SIGNATURE

**Country Of Origin

X

WARRANTY POLICY: CSI warrants products manufactured by CSI to be free from defects in materials and workmanship under normal use and service for twelve (12) months from date of shipment unless specified otherwise, subject to the following conditions:
CSI's obligation under this warranty is limited to repairing or replacing (at CSI's option) products which have been returned prepaid to CSI. CSI will return warranted equipment by surface carrier prepaid. This warranty shall not apply to any CSI products which have been subjected to modification, misuse, neglect, accidents of nature, or shipping damage. Batteries are not warranted. Under no circumstances will CSI reimburse the claimant for costs incurred in removing and/or reinstalling equipment. This warranty, and CSI's obligation thereunder, is in lieu of all other warranties of suitability and fitness for a particular purpose. CSI is not liable for consequential damages.

CAMPBELL SCIENTIFIC, INC.

815 W 1800 N · Logan, UT 84321-1784 · USA · (435) 753-2342
FAX (435) 750-9540 · www.campbellsci.com
Fed. I.D. #87-0305157 · DUNS#06-798-0730

*** Please reference our Quote number on your Purchase Order ***

PROFORMA INVOICE **PRICE QUOTATION**

Quote Number: 47727
Quote Date: 31-MAY-05
Page: 2 of 4
Valid Through: 30-JUL-05

USER ADDRESS:
ROGER DENICK
BURGESS & NIPLE
5085 REED RD
COLUMBUS, OH 43220

TEL: (614) 459-2050
FAX: (614) 451-1385

RFQ#	Terms	Freight Terms	Est. Ship Date	CSI Contact
	UPON APPROVAL	PREPAID & ADD	30 DAYS ARO	DAVE MEEK

Line	Item	**CO	Description	Qty Ord	Unit	Selling Price	Ext. Price
12	107-L	US	107-L TEMPERATURE PROBE (-35 TO +50C)	1	EACH	80.50	80.50
12	9661	US	CABLE 22 AWG 1 TWISTED PAIR SANTOPRENE	15	FEET	0.30	4.50
13	TE525MM-L	US	TE525MM-L TEXAS ELECTRONICS RAIN GAGE 0.1MM (0.00394 INCH) TIP W/9.6 INCH ORIFICE	1	EACH	408.25	408.25
13	9661	US	CABLE 22 AWG 1 TWISTED PAIR SANTOPRENE	25	FEET	0.30	7.50
14	CM6	US	CM6 6FT TRIPOD W/GROUNDING KIT	1	EACH	425.50	425.50
15	NOTE		- - ---WATER CONTENT PROFILE PROBES---	1	EACH	0.00	0.00
16	ENVIROSMART	US	ENVIROSMART SENTEK PROBE SYSTEM	1	EACH	0.00	0.00
16	SEN22212	AU	ENVIROSMART SENTEK 22212 SDI-12 INTERFACE	1	EACH	431.25	431.25
16	SEN01012	AU	ENVIROSMART SENTEK 01012 1M PROBE COMPLETE W/O INTERFACE	1	EACH	172.50	172.50
16	SEN03010	AU	ENVIROSMART SENTEK 03010 CLICK-ON WATER CONTENT SENSOR, COMPLETE	3	EACH	230.00	690.00
16	SEN80040	AU	ENVIROSMART SENTEK 80040 CUTTING EDGE YELLOW	1	EACH	11.79	11.79
16	SEN22455	AU	ENVIROSMART SENTEK 22455 PLASTIC EXPANDABLE BUNG	1	EACH	21.85	21.85
16	SENASSEMBLE	US	ENVIROSMART CSI ASSEMBLES & TESTS SENSORS ON PROBE AT USER SPECIFIED DEPTHS	1	EACH	115.00	115.00
17	SENSDI12CBL-L	US	SENSDI12CBL-L DATALOGGER TO SENTEK SDI-12 INTERFACE CABLE	1	EACH	23.00	23.00
17	2206	US	CABLE 22 AWG 3 CONDUCTOR SHIELDED PVC	200	FEET	0.36	72.00

AUTHORIZED SIGNATURE

**Country Of Origin

X

WARRANTY POLICY: CSI warrants products manufactured by CSI to be free from defects in materials and workmanship under normal use and service for twelve (12) months from date of shipment unless specified otherwise, subject to the following conditions:
CSI's obligation under this warranty is limited to repairing or replacing (at CSI's option) products which have been returned prepaid to CSI. CSI will return warranted equipment by surface carrier prepaid. This warranty shall not apply to any CSI products which have been subjected to modification, misuse, neglect, accidents of nature, or shipping damage. Batteries are not warranted. Under no circumstances will CSI reimburse the claimant for costs incurred in removing and/or reinstalling equipment. This warranty, and CSI's obligation thereunder, is in lieu of all other warranties of suitability and fitness for a particular purpose. CSI is not liable for consequential damages.

CAMPBELL SCIENTIFIC, INC.

815 W 1800 N · Logan, UT 84321-1784 · USA · (435) 753-2342
FAX (435) 750-9540 · www.campbellsci.com
Fed. I.D. #87-0305157 · DUNS#06-798-0730

*** Please reference our Quote number on your Purchase Order ***

PROFORMA INVOICE **PRICE QUOTATION**

Quote Number: 47727
Quote Date: 31-MAY-05
Page: 3 of 4
Valid Through: 30-JUL-05

USER ADDRESS:
ROGER DENICK
BURGESS & NIPLE
5085 REED RD
COLUMBUS, OH 43220

TEL: (614) 459-2050
FAX: (614) 451-1385

RFQ#	Terms	Freight Terms	Est. Ship Date	CSI Contact
	UPON APPROVAL	PREPAID & ADD	30 DAYS ARO	DAVE MEEK

Line	Item	**CO	Description	Qty Ord	Unit	Selling Price	Ext. Price
18	NOTE		- - - - ACCESS TUBES ONLY --	1	EACH	0.00	0.00
19	SEN21010	AU	ENVIROSMART REPLACEMENT SENTEK 21010 1.5M ACCESS TUBE ONLY	3	EACH	25.30	75.90
20	SEN22400	AU	ENVIROSMART REPLACEMENT SENTEK 22400 TOP CAP ASSEMBLY COMPLETE	3	EACH	19.55	58.65
21	SEN22455	AU	ENVIROSMART SENTEK 22455 PLASTIC EXPANDABLE BUNG	3	EACH	21.85	65.55
22	NOTE		- - - --ENVIROSMART ACCESSORIES--	1	EACH	0.00	0.00
23	SEN80127	AU	SENTEK 80127 FAIR RITE BEAD	1	EACH	14.49	14.49
24	SEN80125	AU	SENTEK 80125 SILICA GEL BAG 25G (QTY 10)	1	EACH	39.10	39.10
25	NOTE		- - - -- ENVIROSMART INSTALLATION TOOLS --	1	EACH	0.00	0.00
26	SEN70060	AU	ENVIROSMART SENTEK 70060 NORMALIZATION CONTAINER	1	EACH	180.55	180.55
27	SEN06021	AU	SENTEK 06021 PROBE PROGRAMMING CABLE, 6FT	1	EACH	138.00	138.00
28	SEN06025	AU	SENTEK 06025 INTELLIGENT PROBE UTILITY SOFTWARE	1	EACH	72.45	72.45
29	NOTE		- - - ---DATALOGGER / ENCLOSURE / POWER	1	EACH	0.00	0.00
30	CR1000	US	CR1000 MEASUREMENT & CONTROL MODULE W/CR1000WP	1	EACH	1,552.50	1,552.50
31	CH100	US	CH100 12V CHARGER/REGULATOR	1	EACH	189.75	189.75
32	BP12	TW / CI	BP12 12V SEALED RECHARGEABLE BATTERY, 12AHR	1	EACH	109.25	109.25

AUTHORIZED SIGNATURE

**Country Of Origin

X

WARRANTY POLICY: CSI warrants products manufactured by CSI to be free from defects in materials and workmanship under normal use and service for twelve (12) months from date of shipment unless specified otherwise, subject to the following conditions:
CSI's obligation under this warranty is limited to repairing or replacing (at CSI's option) products which have been returned prepaid to CSI. CSI will return warranted equipment by surface carrier prepaid. This warranty shall not apply to any CSI products which have been subjected to modification, misuse, neglect, accidents of nature, or shipping damage. Batteries are not warranted. Under no circumstances will CSI reimburse the claimant for costs incurred in removing and/or reinstalling equipment. This warranty, and CSI's obligation thereunder, is in lieu of all other warranties of suitability and fitness for a particular purpose. CSI is not liable for consequential damages.

CAMPBELL SCIENTIFIC, INC.

815 W 1800 N · Logan, UT 84321-1784 · USA · (435) 753-2342
FAX (435) 750-9540 · www.campbellsci.com
Fed. I.D. #87-0305157 · DUNS#06-798-0730

* Please reference our Quote number on your Purchase Order *

PROFORMA INVOICE **PRICE QUOTATION**

Quote Number: 47727
Quote Date: 31-MAY-05
Page: 4 of 4
Valid Through: 30-JUL-05

USER ADDRESS:
ROGER DENICK
BURGESS & NIPLE
5085 REED RD
COLUMBUS, OH 43220

TEL: (614) 459-2050
FAX: (614) 451-1385

RFQ#	Terms	Freight Terms	Est. Ship Date	CSI Contact
	UPON APPROVAL	PREPAID & ADD	30 DAYS ARO	DAVE MEEK

Line	Item	**CO	Description	Qty Ord	Unit	Selling Price	Ext. Price
33	MSX10	CN	MSX10 10W SOLAR PANEL, 15FT CABLE	1	EACH	230.00	230.00
34	15875	US	ENC 12/14 WEATHER-RESISTANT ENCLOSURE 12 X 14 INCH	1	EACH	224.25	224.25
34	5961	US	ENC 12/14 OPTION W/1 CONDUIT FOR CABLES	1	EACH	0.00	0.00
34	7839	US	ENCLOSURE MOUNTS SINGLE NOTCH FOR ENC 12/14 FOR USE W/CM6, CM10, OR TOWERS	1	EACH	40.25	40.25
35	NOTE		- - --- PC SUPPORT SOFTWARE & CABLE ---	1	EACH	0.00	0.00
36	RESOURCECD	US	RESOURCECD REFERENCE MATERIAL & STARTER SOFTWARE	1	EACH	0.00	0.00

Subtotal:	$7,106.59
Tax:	$ .00
* TOTAL USD *	$7,106.59

AUTHORIZED SIGNATURE

**Country Of Origin

X

WARRANTY POLICY: CSI warrants products manufactured by CSI to be free from defects in materials and workmanship under normal use and service for twelve (12) months from date of shipment unless specified otherwise, subject to the following conditions
CSI's obligation under this warranty is limited to repairing or replacing (at CSI's option) products which have been returned prepaid to CSI. CSI will return warranted equipment by surface carrier prepaid. This warranty shall not apply to any CSI products which have been subjected to modification, misuse, neglect, accidents of nature, or shipping damage. Batteries are not warranted. Under no circumstances will CSI reimburse the claimant for costs incurred in removing and/or reinstalling equipment. This warranty, and CSI's obligation thereunder, is in lieu of all other warranties of suitability and fitness for a particular purpose. CSI is not liable for consequential damages.

CAMPBELL SCIENTIFIC, INC.

815 W 1800 N · Logan, UT 84321-1784 · USA · (435) 753-2342
FAX (435) 750-9540 · www.campbellsci.com
Fed. LD. #87-0305157 · DUNS#06-798-0730

*** Please reference our Quote number on your Purchase Order ***

PROFORMA INVOICE **PRICE QUOTATION**

Quote Number: 47799
Quote Date: 06-JUN-05
Page: 1 of 5
Valid Through: 05-AUG-05

USER ADDRESS:
ROGER DENICK
BURGESS & NIPLE
5085 REED RD
COLUMBUS, OH 43220

TEL: (614) 459-2050
FAX: (614) 451-1385

RFQ#	Terms	Freight Terms	Est. Ship Date	CSI Contact
	UPON APPROVAL	PREPAID & ADD	45 DAYS ARO	DAVE MEEK

Line	Item	**CO	Description	Qty Ord	Unit	Selling Price	Ext. Price
1	NOTE		- - !!! PRELIMINARY !!!	1	EACH	0.00	0.00
2	NOTE		- - ---WEATHER STATION---	1	EACH	0.00	0.00
3	NOTE		- - ---W/ WIRELESS WATER CONTENT PROBES---	1	EACH	0.00	0.00
4	NOTE		- - ---WEATHER SENSORS / MOUNTS---	1	EACH	0.00	0.00
5	03001-L	US	03001-L RM YOUNG WIND SENTRY SET	1	EACH	575.00	575.00
5	9661	US	CABLE 22 AWG 1 TWISTED PAIR SANTOPRENE	11	FEET	0.30	3.30
5	9720	US	CABLE 22 AWG 2 TWISTED PAIR SHIELDED SANTOPRENE	11	FEET	0.54	5.94
6	019ALU	US	019ALU ALUMINUM SENSOR CROSSARM W/MOUNTING HARDWARE	1	EACH	86.25	86.25
7	LI200X-L	US	LI200X-L LI-COR PYRANOMETER (FIXED CALIBRATION)	1	EACH	333.50	333.50
7	9661	US	CABLE 22 AWG 1 TWISTED PAIR SANTOPRENE	11	FEET	0.30	3.30
8	LI2003S	US	LI2003S LI-COR PYRANOMETER BASE & LEVELING FIXTURE	1	EACH	69.00	69.00
9	025STAND	US	025STAND PYRANOMETER CROSSARM STAND	1	EACH	69.00	69.00
10	18008	FI	HMP50-L VAISALA TEMPERATURE/RH PROBE	1	EACH	385.25	385.25
10	18159	US	CABLE 24 AWG 4 CONDUCTOR SHIELDED SANTOPRENE	6	FEET	1.12	6.72
11	4020	US	41303-5A RM YOUNG 6-PLATE GILL SOLAR RADIATION SHIELD	1	EACH	115.00	115.00

AUTHORIZED SIGNATURE

**Country Of Origin

X

WARRANTY POLICY: CSI warrants products manufactured by CSI to be free from defects in materials and workmanship under normal use and service for twelve (12) months from date of shipment unless specified otherwise, subject to the following conditions:
CSI's obligation under this warranty is limited to repairing or replacing (at CSI's option) products which have been returned prepaid to CSI. CSI will return warranted equipment by surface carrier prepaid This warranty shall not apply to any CSI products which have been subjected to modification, misuse, neglect, accidents of nature, or shipping damage Batteries are not warranted. Under no circumstances will CSI reimburse the claimant for costs incurred in removing and/or reinstalling equipment This warranty, and CSI's obligation thereunder, is in lieu of all other warranties of suitability and fitness for a particular purpose CSI is not liable for consequential damages.

CAMPBELL SCIENTIFIC, INC.

815 W 1800 N · Logan, UT 84321-1784 · USA · (435) 753-2342
FAX (435) 750-9540 · www.campbellsci.com
Fed. I.D. #87-0305157 · DUNS#86-798-0730

*** Please reference our Quote number on your Purchase Order ***

PROFORMA INVOICE **PRICE QUOTATION**

Quote Number: 47799
Quote Date: 06-JUN-05

Valid Through: 05-AUG-05

USER ADDRESS:
ROGER DENICK
BURGESS & NIPLE
5085 REED RD
COLUMBUS, OH 43220

TEL: (614) 459-2050
FAX: (614) 451-1385

RFQ#	Terms	Freight Terms	Est. Ship Date	CSI Contact
	UPON APPROVAL	PREPAID & ADD	45 DAYS ARO	DAVE MEEK

Line	Item	**CO	Description	Qty Ord	Unit	Selling Price	Ext. Price
12	107-L	US	107-L TEMPERATURE PROBE (-35 TO +50C)	1	EACH	80.50	80.50
12	9661	US	CABLE 22 AWG 1 TWISTED PAIR SANTOPRENE	15	FEET	0.30	4.50
13	TE525MM-L	US	TE525MM-L TEXAS ELECTRONICS RAIN GAGE 0.1MM (0.00394 INCH) TIP W/9.6 INCH ORIFICE	1	EACH	408.25	408.25
13	9661	US	CABLE 22 AWG 1 TWISTED PAIR SANTOPRENE	25	FEET	0.30	7.50
14	CM6	US	CM6 6FT TRIPOD W/GROUNDING KIT	1	EACH	425.50	425.50
15	NOTE		----WATER CONTENT PROFILE PROBES---	1	EACH	0.00	0.00
16	15761	US	CR215 DATALOGGER W/2.4GHZ SPREAD SPECTRUM RADIO	1	EACH	701.50	701.50
17	COAX RPSMA-L	US	COAX RPSMA-L ANTENNA CABLE LMR195 W/REVERSE POLARITY SMA & TYPE N MALE CONNECTOR	1	EACH	40.25	40.25
17	14197	--	CABLE COAX LMR195 SHIELDED POLYETHYLENE LOW LOSS (11DB/100FT @ 900MHZ)	10	FEET	0.67	6.70
18	16755	US	ANTENNA 2.4GHZ YAGI ENCLOSED 13DBD TYPE N-F W/MOUNTING HARDWARE	1	EACH	149.50	149.50
19	PS100	US	PS100 12V POWER SUPPLY W/CHARGING REGULATOR & 7AHR SEALED RECHARGEABLE BATTERY	1	EACH	241.50	241.50
20	MSX10	CN	MSX10 10W SOLAR PANEL, 15FT CABLE	1	EACH	230.00	230.00
21	15874	US	ENC 10/12 WEATHER-RESISTANT ENCLOSURE 10 X 12 INCH	1	EACH	207.00	207.00

AUTHORIZED SIGNATURE

**Country Of Origin

X

WARRANTY POLICY: CSI warrants products manufactured by CSI to be free from defects in materials and workmanship under normal use and service for twelve (12) months from date of shipment unless specified otherwise, subject to the following conditions:
CSI's obligation under this warranty is limited to repairing or replacing (at CSI's option) products which have been returned prepaid to CSI. CSI will return warranted equipment by surface carrier prepaid. This warranty shall not apply to any CSI products which have been subjected to modification, misuse, neglect, accidents of nature, or shipping damage. Batteries are not warranted. Under no circumstances will CSI reimburse the claimant for costs incurred in removing and/or reinstalling equipment. This warranty and CSI's obligation thereunder, is in lieu of all other warranties of suitability and fitness for a particular purpose. CSI is not liable for consequential damages

CAMPBELL SCIENTIFIC, INC.

815 W 1800 N · Logan, UT 84321-1784 · USA · (435) 753-2342
FAX (435) 750-9540 · www.campbellsci.com
Fed. I.D. #87-0305157 · DUNS#06-798-0730

*** Please reference our Quote number on your Purchase Order ***

PROFORMA INVOICE **PRICE QUOTATION**

Quote Number: 47799
Quote Date: 06-JUN-05
Page: 3 of 5
Valid Through: 05-AUG-05

USER ADDRESS:
ROGER DENICK
BURGESS & NIPLE
5085 REED RD
COLUMBUS, OH 43220

TEL: (614) 459-2050
FAX: (614) 451-1385

RFQ#	Terms	Freight Terms	Est. Ship Date	CSI Contact
	UPON APPROVAL	PREPAID & ADD	45 DAYS ARO	DAVE MEEK

Line	Item	**CO	Description	Qty Ord	Unit	Selling Price	Ext. Price
21	5962	US	ENC 10/12 OPTION W/1 CONDUIT FOR CABLES	1	EACH	0.00	0.00
21	7838	US	ENCLOSURE MOUNTS SINGLE NOTCH FOR ENC 10/12 FOR USE W/CM6, CM10, OR TOWERS	1	EACH	40.25	40.25
22	ENVIROSMART	US	ENVIROSMART SENTEK PROBE SYSTEM	1	EACH	0.00	0.00
22	SEN22212	AU	ENVIROSMART SENTEK 22212 SDI-12 INTERFACE	1	EACH	431.25	431.25
22	SEN01012	AU	ENVIROSMART SENTEK 01012 1M PROBE COMPLETE W/O INTERFACE	1	EACH	172.50	172.50
22	SEN03010	AU	ENVIROSMART SENTEK 03010 CLICK-ON WATER CONTENT SENSOR, COMPLETE	3	EACH	230.00	690.00
22	SEN80040	AU	ENVIROSMART SENTEK 80040 CUTTING EDGE YELLOW	1	EACH	11.79	11.79
22	SEN22455	AU	ENVIROSMART SENTEK 22455 PLASTIC EXPANDABLE BUNG	1	EACH	21.85	21.85
22	SENASSEMBLE	US	ENVIROSMART CSI ASSEMBLES & TESTS SENSORS ON PROBE AT USER SPECIFIED DEPTHS	1	EACH	115.00	115.00
23	SENSDI12CBL-L	US	SENSDI12CBL-L DATALOGGER TO SENTEK SDI-12 INTERFACE CABLE	1	EACH	23.00	23.00
23	2206	US	CABLE 22 AWG 3 CONDUCTOR SHIELDED PVC	200	FEET	0.36	72.00
24	NOTE		- - -- ACCESS TUBES ONLY --	1	EACH	0.00	0.00
25	SEN21010	AU	ENVIROSMART REPLACEMENT SENTEK 21010 1.5M ACCESS TUBE ONLY	3	EACH	25.30	75.90
26	SEN22400	AU	ENVIROSMART REPLACEMENT SENTEK 22400 TOP CAP ASSEMBLY COMPLETE	3	EACH	19.55	58.65

AUTHORIZED SIGNATURE

**Country Of Origin

X

WARRANTY POLICY: CSI warrants products manufactured by CSI to be free from defects in materials and workmanship under normal use and service for twelve (12) months from date of shipment unless specified otherwise, subject to the following conditions: CSI's obligation under this warranty is limited to repairing or replacing (at CSI's option) products which have been returned prepaid to CSI. CSI will return warranted equipment by surface carrier prepaid. This warranty shall not apply to any CSI products which have been subjected to modification, misuse, neglect, accidents of nature, or shipping damage. Batteries are not warranted. Under no circumstances will CSI reimburse the claimant for costs incurred in removing and/or reinstalling equipment. This warranty, and CSI's obligation thereunder, is in lieu of all other warranties of suitability and fitness for a particular purpose. CSI is not liable for consequential damages.

CAMPBELL SCIENTIFIC, INC.

815 W 1800 N · Logan, UT 84321-1784 · USA · (435) 753-2342
FAX (435) 750-9540 · www.campbellsci.com
Fed. I.D. #87-0305157 · DUNS#06-798-0730

*** Please reference our Quote number on your Purchase Order ***

PROFORMA INVOICE **PRICE QUOTATION**

Quote Number: 47799
Quote Date: 06-JUN-05
Page: 4 of 5
Valid Through: 05-AUG-05

USER ADDRESS:
ROGER DENICK
BURGESS & NIPLE
5085 REED RD
COLUMBUS, OH 43220

TEL: (614) 459-2050
FAX: (614) 451-1385

RFQ#	Terms	Freight Terms	Est. Ship Date	CSI Contact
	UPON APPROVAL	PREPAID & ADD	45 DAYS ARO	DAVE MEEK

Line	Item	**CO	Description	Qty Ord	Unit	Selling Price	Ext. Price
27	SEN22455	AU	ENVIROSMART SENTEK 22455 PLASTIC EXPANDABLE BUNG	3	EACH	21.85	65.55
28	NOTE		- - - --ENVIROSMART ACCESSORIES--	1	EACH	0.00	0.00
29	SEN80127	AU	SENTEK 80127 FAIR RITE BEAD	1	EACH	14.49	14.49
30	SEN80125	AU	SENTEK 80125 SILICA GEL BAG 25G (QTY 10)	1	EACH	39.10	39.10
31	NOTE		- - - -- ENVIROSMART INSTALLATION TOOLS --	1	EACH	0.00	0.00
32	SEN70060	AU	ENVIROSMART SENTEK 70060 NORMALIZATION CONTAINER	1	EACH	180.55	180.55
33	SEN06021	AU	SENTEK 06021 PROBE PROGRAMMING CABLE, 6FT	1	EACH	138.00	138.00
34	SEN06025	AU	SENTEK 06025 INTELLIGENT PROBE UTILITY SOFTWARE	1	EACH	72.45	72.45
35	NOTE		- - - --DATALOGGER / ENCLOSURE / POWER	1	EACH	0.00	0.00
36	CR1000	US	CR1000 MEASUREMENT & CONTROL MODULE W/CR1000WP	1	EACH	1,552.50	1,552.50
37	RF415	US	RF415 2.4GHZ SPREAD SPECTRUM RADIO	1	EACH	488.75	488.75
38	COAX RPSMA-L	US	COAX RPSMA-L ANTENNA CABLE LMR195 W/REVERSE POLARITY SMA & TYPE N MALE CONNECTOR	1	EACH	40.25	40.25
38	14197	--	CABLE COAX LMR195 SHIELDED POLYETHYLENE LOW LOSS (11DB/100FT @ 900MHZ)	10	FEET	0.67	6.70
39	16755	US	ANTENNA 2.4GHZ YAGI ENCLOSED 13DBD TYPE N-F W/MOUNTING HARDWARE	1	EACH	149.50	149.50

AUTHORIZED SIGNATURE

**Country Of Origin

X

WARRANTY POLICY: CSI warrants products manufactured by CSI to be free from defects in materials and workmanship under normal use and service for twelve (12) months from date of shipment unless specified otherwise, subject to the following conditions:
CSI's obligation under this warranty is limited to repairing or replacing (at CSI's option) products which have been returned prepaid to CSI. CSI will return warranted equipment by surface carrier prepaid. This warranty shall not apply to any CSI products which have been subjected to modification, misuse, neglect, accidents of nature, or shipping damage. Batteries are not warranted. Under no circumstances will CSI reimburse the claimant for costs incurred in removing and/or reinstalling equipment. This warranty, and CSI's obligation thereunder, is in lieu of all other warranties of suitability and fitness for a particular purpose. CSI is not liable for consequential damages.

CAMPBELL SCIENTIFIC, INC.

815 W 1800 N · Logan, UT 84321-1784 · USA · (435) 753-2342
FAX (435) 750-9540 · www.campbellsci.com
Fed. I.D. #87-0305157 · DUNS#06-798-0730

*** Please reference our Quote number on your Purchase Order ***

PROFORMA INVOICE **PRICE QUOTATION**

Quote Number: 47799
Quote Date: 06-JUN-05
Page: 5 of 5
Valid Through: 05-AUG-05

USER ADDRESS:
ROGER DENICK
BURGESS & NIPLE
5085 REED RD
COLUMBUS, OH 43220

TEL: (614) 459-2050
FAX: (614) 451-1385

RFQ#	Terms	Freight Terms	Est. Ship Date	CSI Contact
	UPON APPROVAL	PREPAID & ADD	45 DAYS ARO	DAVE MEEK

Line	Item	**CO	Description	Qty Ord	Unit	Selling Price	Ext. Price
40	CH100	US	CH100 12V CHARGER/REGULATOR	1	EACH	189.75	189.75
41	BP12	TW / CI	BP12 12V SEALED RECHARGEABLE BATTERY, 12AHR	1	EACH	109.25	109.25
42	MSX10	CN	MSX10 10W SOLAR PANEL, 15FT CABLE	1	EACH	230.00	230.00
43	15875	US	ENC 12/14 WEATHER-RESISTANT ENCLOSURE 12 X 14 INCH	1	EACH	224.25	224.25
43	5961	US	ENC 12/14 OPTION W/1 CONDUIT FOR CABLES	1	EACH	0.00	0.00
43	7839	US	ENCLOSURE MOUNTS SINGLE NOTCH FOR ENC 12/14 FOR USE W/CM6, CM10, OR TOWERS	1	EACH	40.25	40.25
44	SPECIAL-AE	--	- - WIRELESS SYSTEM PRE-CONFIGURATION/TESTING/DOCUMENTATION	1	EACH	500.00	500.00
45	NOTE		- - ---- PC SUPPORT SOFTWARE & CABLE ---	1	EACH	0.00	0.00
46	LOGGERNET	US	LOGGERNET DATALOGGER SUPPORT SOFTWARE	1	EACH	626.75	626.75

Subtotal:	$10,535.24
Tax:	$ .00
* TOTAL USD *	$10,535.24

AUTHORIZED SIGNATURE

**Country Of Origin

X

WARRANTY POLICY: CSI warrants products manufactured by CSI to be free from defects in materials and workmanship under normal use and service for twelve (12) months from date of shipment unless specified otherwise, subject to the following conditions
CSI's obligation under this warranty is limited to repairing or replacing (at CSI's option) products which have been returned prepaid to CSI. CSI will return warranted equipment by surface carrier prepaid. This warranty shall not apply to any CSI products which have been subjected to modification, misuse, neglect, accidents of nature, or shipping damage. Batteries are not warranted. Under no circumstances will CSI reimburse the claimant for costs incurred in removing and/or reinstalling equipment. This warranty and CSI's obligation thereunder, is in lieu of all other warranties of suitability and fitness for a particular purpose. CSI is not liable for consequential damages.

Soil Volumetric Water Content Probes

Models EasyAG® and EnviroSMART™

The EasyAG® and EnviroSMART™ probes are manufactured by Sentek to provide soil water content profiles for irrigation scheduling or other water movement systems. The measurement range is oven dry to saturation. The probes measure soil moisture at multiple depths and are easy to install. Tools offered by Campbell Scientific allow the probes to be installed with minimal soil disturbance.

The EasyAG and EnviroSMART probes can be integrated with a Campbell Scientific datalogger or weather station. Integrating the probes into our data acquisition systems allows the soil moisture data to be telemetered back to a field station or remote computer. Our dataloggers can measure the probes either through the SDI-12 interface or voltage output. Compatible dataloggers include our CR510, CR10(X), CR1000, CR23X, CR5000, and CR9000.

Both the EasyAG and EnviroSMART probes use electrical capacitance to measure soil moisture. A high frequency electrical field created around each sensor extends through the access tube into the soil. Because soil moisture affects the electrical fields, electrical capacitance measurements can be used to determine soil water content.

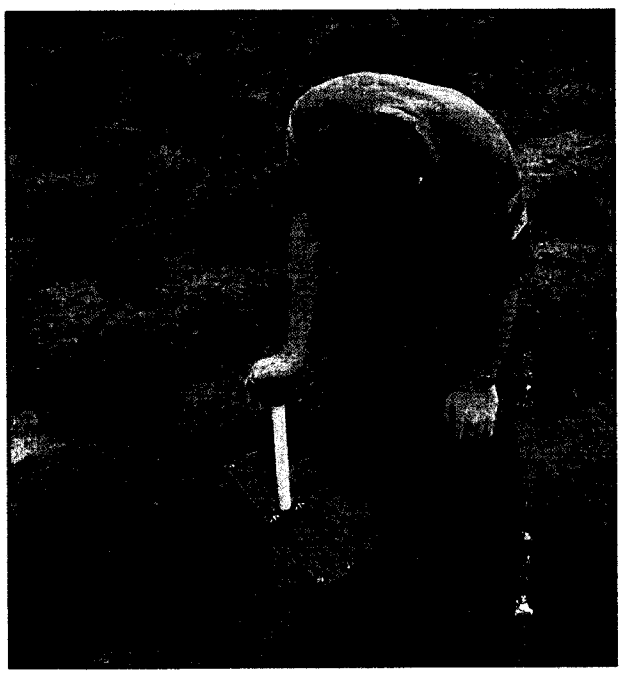

Specialized tools and techniques enable the EasyAG to be installed in soils ranging from light sand to heavy clay.

Software options for displaying the EasyAG or EnviroSMART data include our LoggerNet Datalogger Support Software or where compatible, Irrimax 5.0, Sentek's dedicated irrigation scheduling software (shown).

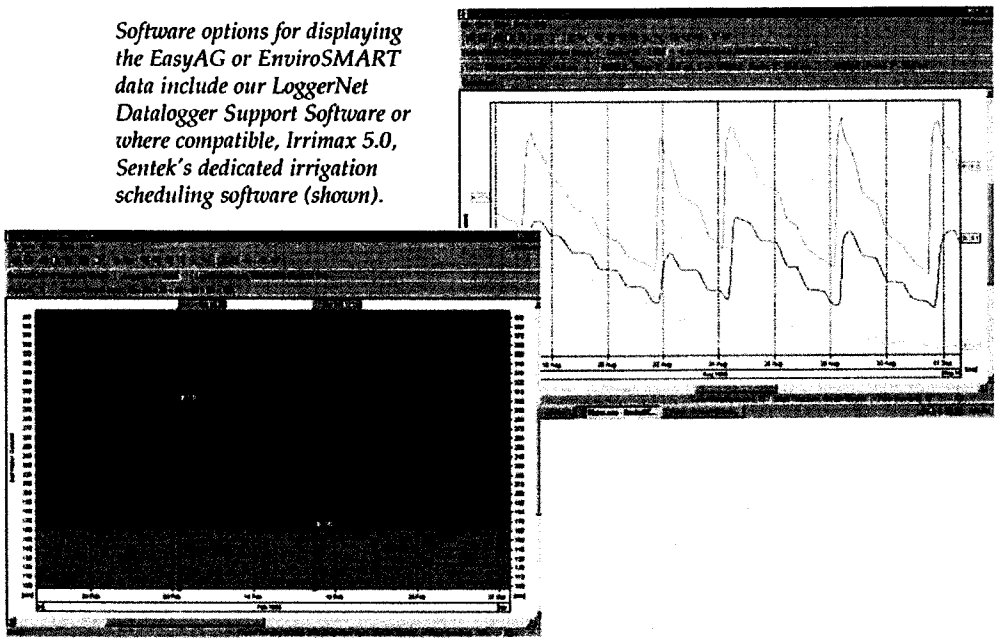

CAMPBELL SCIENTIFIC, INC.
815 W. 1800 N. • Logan, Utah 84321-1784 • (435) 753-2342 • FAX (435) 750-9540 • www.campbellsci.com

EasyAG

EasyAG is used in cultivated soils of good tilth, commonly found in vegetable production areas. The standard EasyAG probe measures water content at depths of 10 cm, 20 cm, 30 cm, and 50 cm. A longer 80 cm version is available that provides water content measurements at depths of 10 cm, 30 cm, 50 cm, and 80 cm. EasyAG is unsuitable for stony soils where the average stone size is greater than 10 mm; EnviroSMART should be used for those applications.

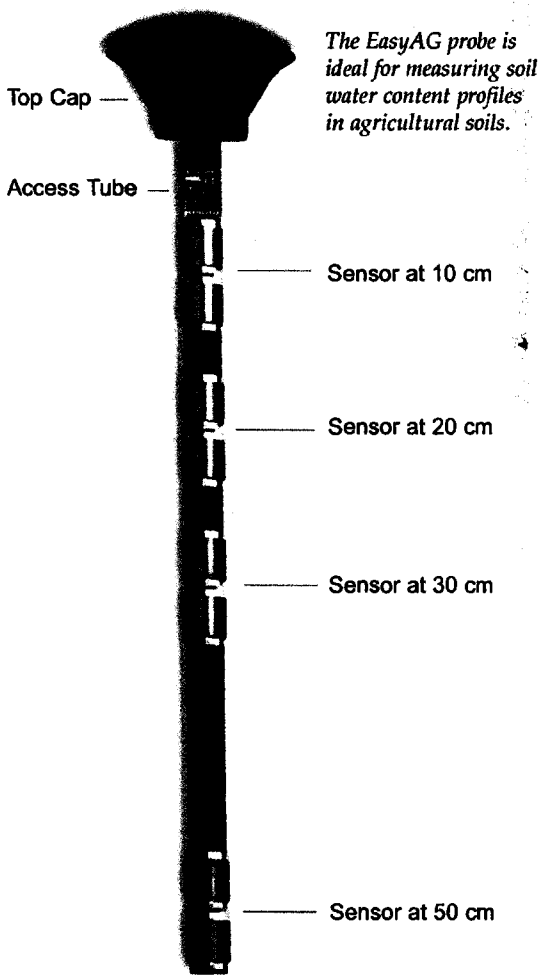

The EasyAG probe is ideal for measuring soil water content profiles in agricultural soils.

EnviroSMART

EnviroSMART is recommended for higher accuracy research measurements, measurements deeper than 80 cm, or stony soils. It is customized for individual applications by adding sensors at user-specified measurement depths. The maximum measurement depth of the standard configuration is 6 feet (2 m); deeper measurements are possible with special provisions.

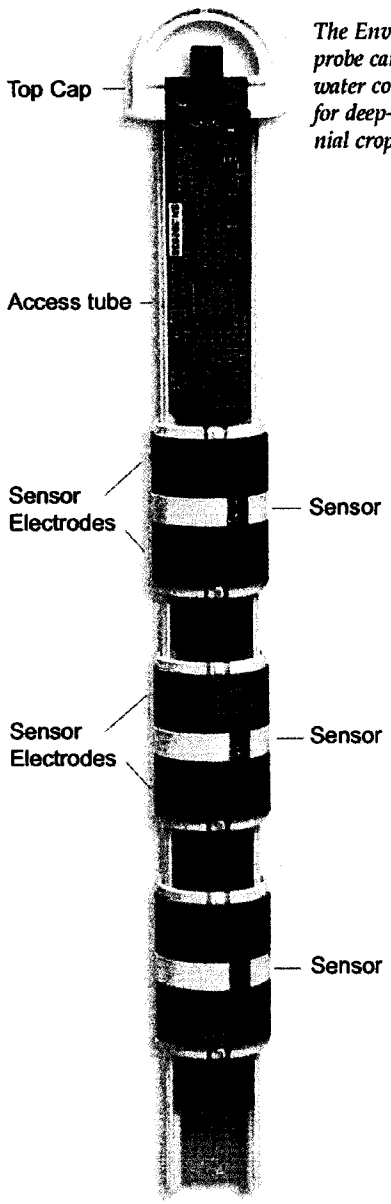

The EnviroSMART probe can provide water content profiles for deep-rooted, perennial crops.

EasyAG Specifications

	SDI-12 Output	Voltage Output
Maximum Cable Length	200 ft (60 m)*	2.0E-09 mV drop/ft cable (differential)** 1.6 mV drop/ft cable (single-ended)**
Maximum Sensors per Standard Probe	4	4
Sensor Measuring Principle	High frequency capacitance	
Output	SDI-12	Analog Voltage
Protocol Options	SDI-12	0 to 5 V (can be user specific)
Interface Measuring Principle	16-bit pulse count	
Output Resolution	16 bit	12 bit
Current Consumption	250 µA @ sleep, 66 mA @ standby, 100 mA @ sampling	0 mA @ sleep, <7 mA @ standby, 100 mA @ sampling
Accuracy when Calibrated	R^2=0.89 based on field calibrations	
Resolution	0.008%	0.025% minimum
Precision	±0.06% Volume	
Measurement Range	Oven dry to saturation	
Temperature Effects	±3%, 5° to 35°C	
Operating Temperature Range	-20° to +75°C	0° to +70°C
Time to Read One Sensor	1.1 seconds	
Sphere of Influence	99% of the reading is taken within a 10 cm radius from the outside of the access tube	
Sensor Diameter	1.04" (2.65 cm)	
Access Tube Diameter	1.26" (3.2 cm)	

**Based on SENVOLTCBL-L cable with the interface drawing 100 mA of current.
*Based on SENSDI12CBL-L cable.

EnviroSMART Specifications

	SDI-12 Output	Voltage Output
Maximum Cable Length	200 ft (60 m)*	2.0E-09 mV drop/ft cable (differential)** 1.6 mV drop/ft cable (single-ended)**
Maximum Sensors per Standard Probe	16	16
Sensor Measuring Principle	High frequency capacitance	
Output	SDI-12	Analog Voltage
Protocol Options	SDI-12	0 to 5 V (can be user specific)
Interface Measuring Principle	16-bit pulse count	
Output Resolution	16 bit	12 bit
Current Consumption	250 µA @ sleep, 66 mA @ standby, 100 mA @ sampling	0 mA @ sleep, <7 mA @ standby, 100 mA @ sampling
Accuracy when Calibrated	R^2=0.99 based on field calibrations	
Resolution	0.008%	0.025% minimum
Precision	±0.03% Volume	
Measurement Range	Oven dry to saturation	
Temperature Effects	±3%, 5° to 35°C	
Operating Temperature Range	-20° to +75°C	0° to +70°C
Time to Read One Sensor	1.1 seconds	
Sphere of Influence	99% of the reading is taken within a 10 cm radius from the outside of the access tube	
Sensor Diameter	2" (5.05 cm)	
Access Tube Diameter	2.22" (5.65 cm)	

**Based on SENVOLTCBL-L cable with the interface drawing 100 mA of current.
*Based on SENSDI12CBL-L cable.

CAMPBELL SCIENTIFIC, INC.
815 W. 1800 N. • Logan, Utah 84321-1784 • (435) 753-2342 • FAX (435) 750-9540
Offices also located in: Australia • Brazil • Canada • England • France • South Africa • Spain

Copyright © 2003, 2004
Campbell Scientific, Inc.
Printed November 2004

Measurement Device / Wireless Sensors

CR200 Family

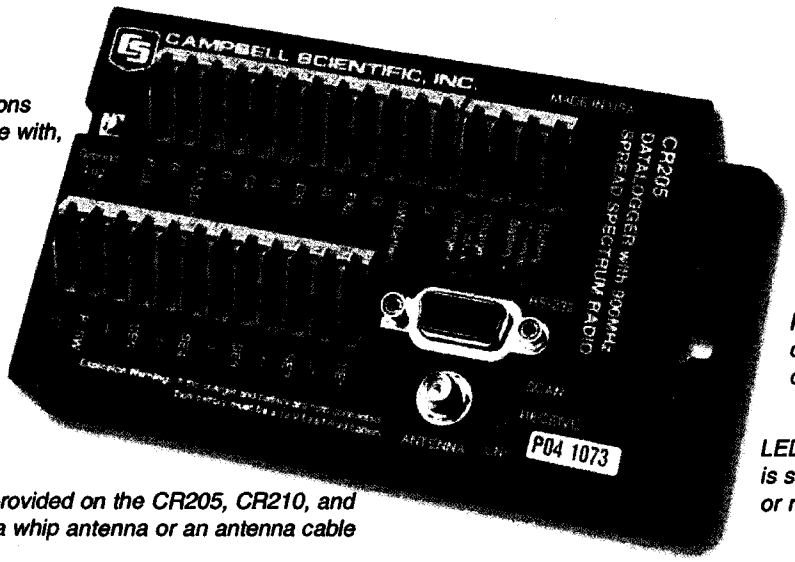

Input/Output Connections measure, communicate with, and power sensors

RS-232 Port supports communications with a computer

LEDs indicate datalogger is scanning, transmitting, or receiving

Antenna connector is provided on the CR205, CR210, and CR215 for connecting a whip antenna or an antenna cable

General Description

The CR200-series dataloggers are small measurement and control devices that measure sensors, process the results, and transmit data via their on-board spread spectrum radio (model dependent). These loggers have an operating temperature range of -40° to +50°C, a 12-bit A/D converter, a battery-backed clock, a 1 Hz scan rate, and a table-based memory structure. They communicate using the PakBus™ protocol, which is a simplified variation of Internet protocols.

Input/Output Channels

The CR200-series loggers have five single-ended analog inputs, one switch closure pulse input, one low level ac pulse input, two control ports, two excitation channels (2.5 or 5 V), and one switched battery output. One of the control ports can be used as an SDI-12 port. Input voltage range is 0 to +2500 mV with 0.6 mV resolution. Differential measurements are not supported.

Enclosures

Applications with minimal power requirements can use the ENC200 enclosure to house the logger and the #16869 sealed rechargeable battery. This 6.7" x 5.5" x 3.7" enclosure has one power connector, one antenna connector, and five compression fittings. A larger enclosure such as our ENC 10/12 or ENC 12/14 is required to house a barometer or a larger battery.

Models/Communications

The models available indicate the communications supported. All of the models support direct communications with a PC.

- **CR200**—supports direct RS-232 communications only.
- **CR205**—includes an on-board 915 MHz Spread Spectrum Radio for transmitting data to another CR205 or a Campbell Scientific RF400 Spread Spectrum Radio. The 915 MHz frequency is used in the US/Canada.
- **CR210**—includes an on-board 922 MHz Spread Spectrum Radio for transmitting data to another CR210 or a Campbell Scientific RF410 Spread Spectrum Radio. The 922 MHz frequency is used in Australia/Israel.
- **CR215**—includes an on-board 2.4 GHz Spread Spectrum Radio for transmitting data to another CR215 or a Campbell Scientific RF415 Spread Spectrum Radio. The 2.4 GHz frequency can be used in many countries worldwide.

Program/Data Storage

Programs and data are stored in a non-volatile Flash memory. Approximately 32,000 data points can be stored in the table-based memory structure.

CAMPBELL SCIENTIFIC, INC.
815 W. 1800 N. • Logan, Utah 84321-1784 • (435) 753-2342 • FAX (435) 750-9540 • www.campbellsci.com

CR205/RF400-based Wireless Sensor Networks

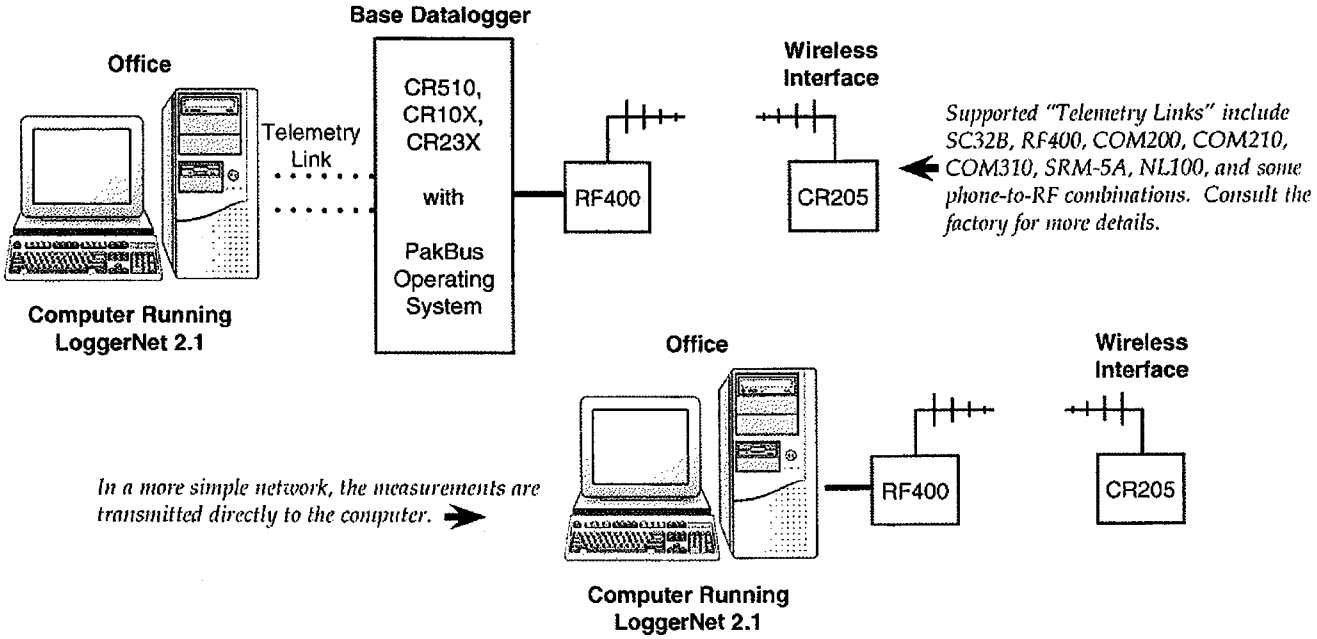

Program Development Tools

The programming language of the CR200-series loggers is CRBasic. Datalogger programs are developed using a program editor (programs cannot be created or edited in the datalogger). Program editors that can be used with these dataloggers include the CRBasic editor and Short Cut. The CRBasic editor is included in our PC400 and LoggerNet Datalogger Support Software. Short Cut can be downloaded, at no charge, from www.campbellsci.com/download.

Communication and Data Collection Tools

PC200W

PC200W, our starter communications software, supports direct communications between a PC and a CR200-series datalogger and provides numeric display of measurements. PC200W can be downloaded, at no charge, from www.campbellsci.com/download.

PC400

PC400 Datalogger Support Software supports programming, manual data collection, and data display. Both direct and spread spectrum communications are supported.

LoggerNet 2.1 or later

Besides providing all of PC400's functions, LoggerNet Datalogger Support Software supports automatic data collection and PakBus® routing.

Power Supply

Sealed rechargeable battery options include the #17365 12 V, 7 Ahr battery and the #16869 12 V, 0.8 Ahr battery. These batteries should be recharged either with a solar panel or ac power. Campbell Scientific offers 1.6 W (SP1.6-L, SP1.6) and 5 W (SP5-L, SP5,) solar panels. The SP1.6-L and SP5-L solar panels connect directly to the datalogger's terminal strip, and the SP1.6 and SP5 plug into the ENC200's power connector. Recharging the battery via ac power requires either the #15988 or #16876 wall charger. The #15988 charger connects directly to the logger's terminal strip, and the #16876 charger plugs into the ENC200's power connector.

Wireless Sensor Networks

The CR205, CR210, and CR215 can be used in a wireless sensor network. Wireless sensor networks are appealing because they are often more economical than trenching, laying conduit, and pulling wire. In some applications, cabled sensors are impractical due to man-made or natural causes, including construction, lightning, moving platforms, agricultural production, or bodies of water.

The diagrams at the top of the page depict our CR205/RF400-based wireless sensor networks. Our CR210/RF410-based and CR215/RF415-based networks are similar. All wireless sensor networks require LoggerNet 2.1 or higher software. Base dataloggers (CR510, CR10X, or CR23X) must have a PakBus operating system installed, which is available from www.campbellsci.com/upgrades.html.

Antenna Options

CR205 and CR210 Antennas

- 0 dBd, omni-directional, ½ wave, whip, right angle
- 1 dBd Dipole, includes adhesive window/wall mount and 10 ft cable
- 3 dBd, omni-directional (requires antenna cable)
- 9 dBd, Yagi (requires antenna cable)

CR215 Antennas

- 0 dBd, omni-directional, ½ wave, whip
- 13 dBd, Yagi (requires antenna cable)

Antenna Cables

- COAX RPSMA is recommended for lengths less than 10 feet
- COAX NTN is recommended for lengths greater than 10 feet (requires a surge protector kit).

Antenna Surge Protector Kits

- 14962 Surge Protector Kit for CR210 and CR205
- 16982 Surge Protector Kit for CR215

Compatible Sensors

The CR200-series loggers can measure a variety of sensors including SDI-12 sensors and 4 to 20 mA sensors. The parameters and sensors in which the CR200-series loggers can measure are listed below:

- **Barometric Pressure**—CS100, CS105, and CS115 barometers
- **Precipitation**—CS700, TE525, TE525WS, TE525MM, and 385 tipping bucket rain gauges
- **Relative Humidity**—CS500 and HMP45C Air Temperature and Relative Humidity probes
- **Snow Depth**—SR50 Ultrasonic Distance Sensor
- **Soil Volumetric Water Content**—CS625 Water Content Reflectometer (developed specifically for the CR200-series dataloggers). *Our CS616 and CS620 sensors are not compatible.*
- **Soil Water Potential**—257 Matric Potential Block. *Our 229 sensor is not compatible.*
- **Temperature**—109 Temperature Probe (developed specifically for the CR200-series dataloggers). *Other temperature probes listed on our US Price List including our 107/108 probes and thermocouples are not compatible.*
- **Water Level**—SR50 Ultrasonic Distance Sensor, SDI-12 encoders, and SDI-12 transducers (CS408, CS445). *Our DB1 Double Bubbler, non-SDI-12 encoders (CS410), and non-SDI-12 transducers (CS400, CS405, CS420, CS425, and CS431) are not compatible.*
- **Water Quality**—109 Temperature Probe and SDI-12 water quality probes. *Our CS547A, CS511, CSIM11, CSIM11-ORP, and OBS-3 probes are not compatible.*
- **Wind Speed and Direction**—014A, 034B, 03101, 03001, 05103, 05106, 05305, and CS800 sensors. *The CSAT3 3-D Sonic Anemometer is not compatible.*

Note: The CR200-series dataloggers cannot make differential measurements and are not compatible with the solar radiation, duff moisture, fuel moisture/temperature, geographic position, leaf wetness, and soil heat flux sensors listed on our price lists. Campbell Scientific's SDM devices and multiplexers are also not supported.

Specifications

Electrical specifications are valid over a -40° to +50°C range unless otherwise specified.

Analog Inputs; Digital I/O

Channels SE1 to SE5 can be individually configured for single-ended measurement or digital I/O.

Single-Ended Measurement (SE1 to SE5)

- Analog input range: 0 ≤ V < 2.5 Vdc
- Measurement resolution: 0.6 mV
- Measurement Accuracy
  - Typical: ±(0.25% of reading + 1.2 mV offset) over -40° to +50°C
  - Worst-case: ±(1% of reading + 2.4 mV offset) over -40° to 50°C

Period Averaging (SE1 to SE4)

- Maximum input voltage: 4 Vdc
- Frequency range: 0 to 150 kHz
- Voltage threshold: counts cycles on transition from <0.9 Vdc to >2.1 Vdc

Digital I/O (SE1 to SE5)

- Input/output high state: 2.1 to 3.3 Vdc
- Input/output low state: <0.9 Vdc
- Output high state: 3.3 V (no load)
- Drive current: 220 µA @ 2.7 Vdc
- Maximum input voltage: 4 Vdc

Half Bridge Measurements

- Accuracy: Relative to the excitation. Using +2.5 Vdc excitation, is ±(0.06% of reading + 2.4 mV)

Excitation Channels: (EX1 and EX2)

- Range: programmable 0, 2.5, 5 Vdc, or off (floating)
- Accuracy: ±25 mV on +2.5 Vdc range, ±125 mV on +5.0 Vdc range
- Maximum current: 25 mA on +2.5 Vdc range, 10 mA on +5.0 Vdc range

Control Ports (C1 and C2)

Digital I/O

- Voltage level when configured as input: <0.9 Vdc (low state) to >2.7 Vdc (high state)
- Voltage level when configured as output: 0 V (low state), 5 Vdc (high state) (no load)
- Logic level: TTL
- Drive current: 1.5 mA @ 4.5 V

SDI-12

- SDI-12 sensors connect to C1

Specifications (continued)

Pulse Counters

Switch Closure (P_SW)

- Maximum count rate: 100 Hz
- Minimum switch open time: 5 ms
- Minimum switch closed time: 5 ms
- Maximum bounce time: 4 ms

Pulse Count (P_SW, C1, and C2)

- Voltage threshold: count on transition from <0.9 V to >2.7 Vdc
- Maximum input frequency: 1 kHz
- Max input voltage: C1 & C2 (6.5 V), P_SW (4 Vdc)

Low Level ac (P_LL)

- Voltage threshold: <0.5 to >2V
- Minimum input: 20 mV RMS
- Maximum frequency: 1 kHz
- Maximum input: ±20 V

Note: P_LL, C1, & C2 can be used for switch closure using the battery voltage and a 20 kOhm pull-up resistor. If the dc offset is >0.5 V, then AC coupling is required.

Communications

- Serial Interface: Female RS-232 9-pin interface for logger-to-PC communications
- Onboard Spread Spectrum Radio
  - 915 MHz (CR205), 922 MHz (CR210), or 2.4 GHz (CR215)
  - 1 mile transmission range with 0 dBd ¼ wave antenna (line-of-sight), 900 MHz radios
  - 0.6 miles (1 km) transmission range with 0 dBd ½ wave antenna (line-of-sight), 2.4 GHz radio
  - Up to 10 mile range with higher gain antenna (line-of-sight)
  - RF4XX used as a base station radio
- Available radio transmission modes:
  - Always on, program controlled
  - Cycle time: 1 or 8 s cycles; on for 100 ms every period; checks for incoming communication
  - Scheduled transmission time: off until transmission time
- PakBus® packet switching network protocol

Clock Accuracy

- 8.2 minutes/month @ -40° to +50°C; 1 minute/month @ +25°C

CPU and Storage

- 128 kByte Flash Final Storage; data format is 4 bytes per data point (table-based)
- 6.5 kByte Flash Program Storage
- Fastest scan rate once per second

Switched Battery (SW BATTERY)

- Switched under program control
- 300 mA minimum current available

Power

- Battery voltage range: 7 to 16 Vdc (can program datalogger to measure internal battery voltage)
- Battery: 12 Vdc sealed rechargeable with on-board charging circuit. Alkaline cells, lithium, or other non-rechargeable battery types may be connected if the charging circuit is not used (i.e. nothing connected to charging terminals).
- Charger input voltage: 16 to 22 Vdc
- Shelf life of clock's backup battery: 5 years

Current Drain (@12 V)

- Quiescent current drain: no radio or radio powered off ~0.2 mA
- Active current drain:
  - No radio ~3 mA
  - Radio receive ~20 mA (CR205, CR210), ~36 mA (CR215)
  - Radio transmit ~75 mA (CR205, CR210, CR215)
- Average continuous current drain:
  - Radio always on ~20 mA (CR205, CR210), ~36 mA (CR215)
  - Radio in 1 s duty cycle ~2.2 mA (CR205, CR210), ~4 mA (CR215)
  - Radio in 8 s duty cycle ~0.45 mA (CR205, CR210), ~0.8 mA (CR215)

CE Compliance (as of 03/02)

Standard(s) to which conformity is declared:
EN55022: 1995 and EN61326: 1998

EMI and ESD Protection

Immunity: Meets or exceeds following standards:
ESD: per IEC 1000-4-2; ±8 kV air, ±4 kV contact discharge
RF: per IEC 1000-4-3; 3 V/m, 80-1000 MHz
EFT: per IEC 1000-4-4; 1 kV power, 500 V I/O
Surge: per IEC 1000-4-5; 1 kV power and I/O
Conducted: per IEC 1000-4-6; 3 V 150 kHz-80 MHz
Emissions and immunity performance criteria available on request.

Case

- Aluminum case with spring-loaded terminals
- Dimensions (including terminals): 5.5" x 3" x 2" (14.0 x 17.6 x 5.1 cm)
- Custom case: available for OEM applications; contact Campbell Scientific

Warranty: One year covering parts and labor.

CAMPBELL SCIENTIFIC, INC.
815 W. 1800 N. • Logan, Utah 84321-1784 • (435) 753-2342 • FAX (435) 750-9540
Offices also located in: Australia • Brazil • Canada • England • France • South Africa • Spain

Copyright © 2001, 2005
Campbell Scientific, Inc.
Printed April 2005

Preliminary Quotation

ZENO® Weather Station

A Versatile, Professional Weather Station Designed for Ease of Use and Future Upgrade.

Coastal Environmental Systems, Inc.
820 First Avenue South ♦ Seattle, Washington 98134
www.CoastalEnvironmental.com

Quotation Number: KP – 122b *Rev.Date:* *PRICES GUARANTEED FOR ONE YEAR*

PREPARED FOR:
Roger Denick
Burgess & Niple
5085 Reed Road
Columbus, OH 43220
RDenick@burnip.com

PREPARED BY:
Kelly Paletta, Products Manager
800-488-8291 x170
kpaletta@CoastalEnvironmental.com

TERMS: Net 30 (OAC)
STANDARD DELIVERY: 30 - 60 Days ARO
SHIPPING: Prepaid/Add, FOB Seattle, WA

Part Number	Weather Station Data	Commercial Price	Net Price
S1034	ZENO®-3200 Datalogger - w/Housing and Wiring Panel * 32-bit microcontroller, Motorola 68332, 16MHz, Full floating point arithmetic, 16Kb data storage memory * 14 single-ended analog inputs (7 differential) 18 bit resolution, 1-90 samples per second sofware selectable * 2 single-ended, 12 bit resolution input channels * 8 user configurable digital input channels * 6 general purpose digital input/output channels * 1 tipping bucket rain gauge input * Switched excitation AND switched power outputs * Hardware AND Software watchdog timer and power monitor * Real-time clock, battery-backed * Universal Serial Interface	1,205.56	1,130.99
S1214Z	ZENO®-3200 Full Serial I/O Ports, up to 5 serial ports depending on configuration and FREE Universal Serial Interface - configurable on any port in single or multi-drop mode	236.84	223.88
1288	ZENOSOFT® - Operating system software for ZENO®-3200. Contains menus and parameter setups for sensors, processes and data outputs.	247.37	233.83
S1122Z	CABLE - communications cable for ZENO®-3200 to PC DB9 to DB9, w/adapter, Std.	38.89	36.48
S1036	MEMORY - ZENO®-3200, 1-Mbyte Option of SRAM	178.40	169.06
S1329	MET-EXPERT Firmware: The ZENO - 3200® examines data from each and every sensor to detect common faults and ensure that the sensor is operating within range. If it is not, an alarm message is sent out and logged in the data.	477.89	451.73
S1027ZA	ENCLOSURE - ZENO®-3200, NEMA-4, Fiberglass, for agricultural stations, includes back plate and marine grade feed-throughs for up to 4 sensors	422.22	396.11
S1104Z	SENSOR - Wind Monitor speed, direction, gust, much more...- Prop and vane style	866.67	813.06
S1276Z	SENSOR - Relative humidity and air temperature, +/-3% and +/- 0.4 degrees C accuracy	742.22	696.31
S1081Z	SENSOR - Barometric Pressure, m/n IC 1220A, ±3 mBars	489.47	462.68
S1068Z	SENSOR - Precipitation, Tipping Bucket 6", resolution 0.01 inch	433.68	409.94
S1282	SENSOR - SOIL temperature, embedded thermistor type	75.56	70.88
~~S9420~~	~~SENSOR - Soil moisture TDR (qty 3 @$619 ea)~~	~~2,055.00~~	~~1,857.00~~
S1376Z	SENSOR - Present weather sensor, WIVIS optical sensor	8,000.00	7,505.19
S1114Z	SENSOR - Solar Radiation, m/n LI200SZ, Shortwave ± 10%	498.89	468.03
S1026	POWER SUPPLY - ZENO®-3200, Int, 110 VAC 12 VDC with battery backup, includes charger	231.58	218.90
S1138I	SOFTWARE - INTERCEPT® Enhanced	480.00	456.00
S80021	SPECIAL ENGINEERING SERVICES: Configuration and test	450.00	375.00
S1194ZA	TOWER - Heavy duty, 3 meter, for ZENO®-3200, includes mounting hardware for ZENO® and agricultural	510.53	482.58
	Total:	**$17,640.77**	**$16,457.65**

Continued on following page

Denick, Roger

From: Kelly Paletta [kpaletta@coastalenvironmental.com]
Sent: Monday, June 06, 2005 6:28 PM
To: Denick, Roger
Subject: Soil Moisture S9420

Attachments: Denick.kp122.BurgessNiple.doc

Denick.kp122.BurgessNiple.doc

Specs on the soil moisture sensor follow.

I learned that you can have a cable of up to 1,000 ft for this sensor. Let's use ~ $2.00/foot for cable.

Water Content Reflectometer measures the volumetric water content from 0% to saturation. It uses time-domain measurement methods, but a reflectometer (cable tester) such as the TDR100 is not required.

The probe consists of two 30 cm long stainless steel rods connected to the measurement electronics. The probe rods can be inserted from the surface or the probe can be buried at any orientation to the surface.

Features
Measures volumetric water content using time-domain reflectometry methods Designed for long-term unattended water content monitoring Accuracy ±2.5% VWC using standard calibration Resolution better than 0.1% VWC Measurement time is <500 microseconds

Specifications
Accuracy: ±2.5% VWC using standard calibration in measurement range 0% VWC to 50% VWC
Precision: 0.05% VWC
Resolution: 0.1% VWC
Rod Length: 300 mm (11.8")
Rod Diameter: 3.2 mm (0.13")
Rod Spacing: 32 mm (1.3")
Probe Head: 85 mm x 63 mm x 18 mm (3.3" x 2.5" x 0.7")

==========
Kelly Paletta
Products Manager
Coastal Environmental Systems Inc
800-488-8291 X170
kpaletta@coastalenvironmental.com
==========

South Pole Weather Report - Now Available With Your Morning Coffee! To learn more, click here: www.CoastalEnvironmental.com/newtext.html

MOBILE AUTOMATIC WEATHER STATIONS

CAMPBELL SCIENTIFIC, INC.

815 W 1800 N · Logan, UT 84321-1784 · USA · (435) 753-2342
FAX (435) 750-9540 · www.campbellsci.com
Fed. I.D. #87-0305157 · DUNS#06-798-0730

*** Please reference our Quote number on your Purchase Order ***

PROFORMA INVOICE **PRICE QUOTATION**

Quote Number: 47799
Quote Date: 06-JUN-05
Page: 1 of 5
Valid Through: 05-AUG-05

USER ADDRESS:
ROGER DENICK
BURGESS & NIPLE
5085 REED RD
COLUMBUS, OH 43220

TEL: (614) 459-2050
FAX: (614) 451-1385

RFQ#	Terms	Freight Terms	Est. Ship Date	CSI Contact
	UPON APPROVAL	PREPAID & ADD	45 DAYS ARO	DAVE MEEK

Line	Item	**CO	Description	Qty Ord	Unit	Selling Price	Ext. Price
1	NOTE		- - !!! PRELIMINARY !!!	1	EACH	0.00	0.00
2	NOTE		- - ---WEATHER STATION---	1	EACH	0.00	0.00
3	NOTE		- - ---W/ WIRELESS WATER CONTENT PROBES---	1	EACH	0.00	0.00
4	NOTE		- - ---WEATHER SENSORS / MOUNTS---	1	EACH	0.00	0.00
5	03001-L	US	03001-L RM YOUNG WIND SENTRY SET	1	EACH	575.00	575.00
5	9661	US	CABLE 22 AWG 1 TWISTED PAIR SANTOPRENE	11	FEET	0.30	3.30
5	9720	US	CABLE 22 AWG 2 TWISTED PAIR SHIELDED SANTOPRENE	11	FEET	0.54	5.94
6	019ALU	US	019ALU ALUMINUM SENSOR CROSSARM W/MOUNTING HARDWARE	1	EACH	86.25	86.25
7	LI200X-L	US	LI200X-L LI-COR PYRANOMETER (FIXED CALIBRATION)	1	EACH	333.50	333.50
7	9661	US	CABLE 22 AWG 1 TWISTED PAIR SANTOPRENE	11	FEET	0.30	3.30
8	LI2003S	US	LI2003S LI-COR PYRANOMETER BASE & LEVELING FIXTURE	1	EACH	69.00	69.00
9	025STAND	US	025STAND PYRANOMETER CROSSARM STAND	1	EACH	69.00	69.00
10	18008	FI	HMP50-L VAISALA TEMPERATURE/RH PROBE	1	EACH	385.25	385.25
10	18159	US	CABLE 24 AWG 4 CONDUCTOR SHIELDED SANTOPRENE	6	FEET	1.12	6.72
11	4020	US	41303-5A RM YOUNG 6-PLATE GILL SOLAR RADIATION SHIELD	1	EACH	115.00	115.00

AUTHORIZED SIGNATURE

**Country Of Origin

X

WARRANTY POLICY: CSI warrants products manufactured by CSI to be free from defects in materials and workmanship under normal use and service for twelve (12) months from date of shipment unless specified otherwise, subject to the following conditions:
CSI's obligation under this warranty is limited to repairing or replacing (at CSI's option) products which have been returned prepaid to CSI. CSI will return warranted equipment by surface carrier prepaid. This warranty shall not apply to any CSI products which have been subjected to modification, misuse, neglect, accidents of nature, or shipping damage. Batteries are not warranted. Under no circumstances will CSI reimburse the claimant for costs incurred in removing and/or reinstalling equipment. This warranty and CSI's obligation thereunder is in lieu of all other warranties of suitability and fitness for a particular purpose. CSI is not liable for consequential damages.

CAMPBELL SCIENTIFIC, INC.

815 W 1800 N · Logan, UT 84321-1784 · USA · (435) 753-2342
FAX (435) 750-9540 · www.campbellsci.com
Fed. I.D. #87-0305157 · DUNS#06-798-0730

*** Please reference our Quote number on your Purchase Order ***

PROFORMA INVOICE **PRICE QUOTATION**

Quote Number: 47799
Quote Date: 06-JUN-05

Valid Through: 05-AUG-05

USER ADDRESS:
ROGER DENICK
BURGESS & NIPLE
5085 REED RD
COLUMBUS, OH 43220

TEL: (614) 459-2050
FAX: (614) 451-1385

RFQ#	Terms	Freight Terms	Est. Ship Date	CSI Contact
	UPON APPROVAL	PREPAID & ADD	45 DAYS ARO	DAVE MEEK

Line	Item	**CO	Description	Qty Ord	Unit	Selling Price	Ext. Price
12	107-L	US	107-L TEMPERATURE PROBE (-35 TO +50C)	1	EACH	80.50	80.50
12	9661	US	CABLE 22 AWG 1 TWISTED PAIR SANTOPRENE	15	FEET	0.30	4.50
13	TE525MM-L	US	TE525MM-L TEXAS ELECTRONICS RAIN GAGE 0.1MM (0.00394 INCH) TIP W/9.6 INCH ORIFICE	1	EACH	408.25	408.25
13	9661	US	CABLE 22 AWG 1 TWISTED PAIR SANTOPRENE	25	FEET	0.30	7.50
14	CM6	US	CM6 6FT TRIPOD W/GROUNDING KIT	1	EACH	425.50	425.50
15	NOTE		- - ---WATER CONTENT PROFILE PROBES---	1	EACH	0.00	0.00
16	15761	US	CR215 DATALOGGER W/2.4GHZ SPREAD SPECTRUM RADIO	1	EACH	701.50	701.50
17	COAX RPSMA-L	US	COAX RPSMA-L ANTENNA CABLE LMR195 W/REVERSE POLARITY SMA & TYPE N MALE CONNECTOR	1	EACH	40.25	40.25
17	14197	--	CABLE COAX LMR195 SHIELDED POLYETHYLENE LOW LOSS (11DB/100FT @ 900MHZ)	10	FEET	0.67	6.70
18	16755	US	ANTENNA 2.4GHZ YAGI ENCLOSED 13DBD TYPE N-F W/MOUNTING HARDWARE	1	EACH	149.50	149.50
19	PS100	US	PS100 12V POWER SUPPLY W/CHARGING REGULATOR & 7AHR SEALED RECHARGEABLE BATTERY	1	EACH	241.50	241.50
20	MSX10	CN	MSX10 10W SOLAR PANEL, 15FT CABLE	1	EACH	230.00	230.00
21	15874	US	ENC 10/12 WEATHER-RESISTANT ENCLOSURE 10 X 12 INCH	1	EACH	207.00	207.00

AUTHORIZED SIGNATURE

**Country Of Origin

X

WARRANTY POLICY: CSI warrants products manufactured by CSI to be free from defects in materials and workmanship under normal use and service for twelve (12) months from date of shipment unless specified otherwise, subject to the following conditions:
CSI's obligation under this warranty is limited to repairing or replacing (at CSI's option) products which have been returned prepaid to CSI. CSI will return warranted equipment by surface carrier prepaid. This warranty shall not apply to any CSI products which have been subjected to modification, misuse, neglect, accidents of nature, or shipping damage. Batteries are not warranted. Under no circumstances will CSI reimburse the claimant for costs incurred in removing and/or reinstalling equipment. This warranty, and CSI's obligation thereunder, is in lieu of all other warranties of suitability and fitness for a particular purpose. CSI is not liable for consequential damages.

CAMPBELL SCIENTIFIC, INC.

815 W 1800 N · Logan, UT 84321-1784 · USA · (435) 753-2342
FAX (435) 750-9540 · www.campbellsci.com
Fed. I.D. #87-0305157 · DUNS#06-798-0730

*** Please reference our Quote number on your Purchase Order ***

PROFORMA INVOICE **PRICE QUOTATION**

Quote Number: 47799
Quote Date: 06-JUN-05
Page: 3 of 5
Valid Through: 05-AUG-05

USER ADDRESS:
ROGER DENICK
BURGESS & NIPLE
5085 REED RD
COLUMBUS, OH 43220

TEL: (614) 459-2050
FAX: (614) 451-1385

RFQ#	Terms	Freight Terms	Est. Ship Date	CSI Contact
	UPON APPROVAL	PREPAID & ADD	45 DAYS ARO	DAVE MEEK

Line	Item	**CO	Description	Qty Ord	Unit	Selling Price	Ext. Price
21	5962	US	ENC 10/12 OPTION W/1 CONDUIT FOR CABLES	1	EACH	0.00	0.00
21	7838	US	ENCLOSURE MOUNTS SINGLE NOTCH FOR ENC 10/12 FOR USE W/CM6, CM10, OR TOWERS	1	EACH	40.25	40.25
22	ENVIROSMART	US	ENVIROSMART SENTEK PROBE SYSTEM	1	EACH	0.00	0.00
22	SEN22212	AU	ENVIROSMART SENTEK 22212 SDI-12 INTERFACE	1	EACH	431.25	431.25
22	SEN01012	AU	ENVIROSMART SENTEK 01012 1M PROBE COMPLETE W/O INTERFACE	1	EACH	172.50	172.50
22	SEN03010	AU	ENVIROSMART SENTEK 03010 CLICK-ON WATER CONTENT SENSOR, COMPLETE	3	EACH	230.00	690.00
22	SEN80040	AU	ENVIROSMART SENTEK 80040 CUTTING EDGE YELLOW	1	EACH	11.79	11.79
22	SEN22455	AU	ENVIROSMART SENTEK 22455 PLASTIC EXPANDABLE BUNG	1	EACH	21.85	21.85
22	SENASSEMBLE	US	ENVIROSMART CSI ASSEMBLES & TESTS SENSORS ON PROBE AT USER SPECIFIED DEPTHS	1	EACH	115.00	115.00
23	SENSDI12CBL-L	US	SENSDI12CBL-L DATALOGGER TO SENTEK SDI-12 INTERFACE CABLE	1	EACH	23.00	23.00
23	2206	US	CABLE 22 AWG 3 CONDUCTOR SHIELDED PVC	200	FEET	0.36	72.00
24	NOTE		- - --- ACCESS TUBES ONLY ---	1	EACH	0.00	0.00
25	SEN21010	AU	ENVIROSMART REPLACEMENT SENTEK 21010 1.5M ACCESS TUBE ONLY	3	EACH	25.30	75.90
26	SEN22400	AU	ENVIROSMART REPLACEMENT SENTEK 22400 TOP CAP ASSEMBLY COMPLETE	3	EACH	19.55	58.65

AUTHORIZED SIGNATURE

**Country Of Origin

X

WARRANTY POLICY: CSI warrants products manufactured by CSI to be free from defects in materials and workmanship under normal use and service for twelve (12) months from date of shipment unless specified otherwise, subject to the following conditions:
CSI's obligation under this warranty is limited to repairing or replacing (at CSI's option) products which have been returned prepaid to CSI. CSI will return warranted equipment by surface carrier prepaid. This warranty shall not apply to any CSI products which have been subjected to modification, misuse, neglect, accidents of nature, or shipping damage. Batteries are not warranted. Under no circumstances will CSI reimburse the claimant for costs incurred in removing and/or reinstalling equipment. This warranty, and CSI's obligation thereunder, is in lieu of all other warranties of suitability and fitness for a particular purpose. CSI is not liable for consequential damages.

CAMPBELL SCIENTIFIC, INC.

815 W 1800 N · Logan, UT 84321-1784 · USA · (435) 753-2342
FAX (435) 750-9540 · www.campbellsci.com
Fed. I.D. #87-0305157 · DUNS#06-798-0730

*** Please reference our Quote number on your Purchase Order ***

PROFORMA INVOICE **PRICE QUOTATION**

Quote Number: 47799
Quote Date: 06-JUN-05
Page: 4 of 5
Valid Through: 05-AUG-05

USER ADDRESS:
ROGER DENICK
BURGESS & NIPLE
5085 REED RD
COLUMBUS, OH 43220

TEL: (614) 459-2050
FAX: (614) 451-1385

RFQ#	Terms	Freight Terms	Est. Ship Date	CSI Contact
	UPON APPROVAL	PREPAID & ADD	45 DAYS ARO	DAVE MEEK

Line	Item	**CO	Description	Qty Ord	Unit	Selling Price	Ext. Price
27	SEN22455	AU	ENVIROSMART SENTEK 22455 PLASTIC EXPANDABLE BUNG	3	EACH	21.85	65.55
28	NOTE		- - - --ENVIROSMART ACCESSORIES--	1	EACH	0.00	0.00
29	SEN80127	AU	SENTEK 80127 FAIR RITE BEAD	1	EACH	14.49	14.49
30	SEN80125	AU	SENTEK 80125 SILICA GEL BAG 25G (QTY 10)	1	EACH	39.10	39.10
31	NOTE		- - -- ENVIROSMART INSTALLATION TOOLS --	1	EACH	0.00	0.00
32	SEN70060	AU	ENVIROSMART SENTEK 70060 NORMALIZATION CONTAINER	1	EACH	180.55	180.55
33	SEN06021	AU	SENTEK 06021 PROBE PROGRAMMING CABLE, 6FT	1	EACH	138.00	138.00
34	SEN06025	AU	SENTEK 06025 INTELLIGENT PROBE UTILITY SOFTWARE	1	EACH	72.45	72.45
35	NOTE		- - ---DATALOGGER / ENCLOSURE / POWER	1	EACH	0.00	0.00
36	CR1000	US	CR1000 MEASUREMENT & CONTROL MODULE W/CR1000WP	1	EACH	1,552.50	1,552.50
37	RF415	US	RF415 2.4GHZ SPREAD SPECTRUM RADIO	1	EACH	488.75	488.75
38	COAX RPSMA-L	US	COAX RPSMA-L ANTENNA CABLE LMR195 W/REVERSE POLARITY SMA & TYPE N MALE CONNECTOR	1	EACH	40.25	40.25
38	14197	--	CABLE COAX LMR195 SHIELDED POLYETHYLENE LOW LOSS (11DB/100FT @ 900MHZ)	10	FEET	0.67	6.70
39	16755	US	ANTENNA 2.4GHZ YAGI ENCLOSED 13DBD TYPE N-F W/MOUNTING HARDWARE	1	EACH	149.50	149.50

AUTHORIZED SIGNATURE

**Country Of Origin

X

WARRANTY POLICY: CSI warrants products manufactured by CSI to be free from defects in materials and workmanship under normal use and service for twelve (12) months from date of shipment unless specified otherwise, subject to the following conditions:
CSI's obligation under this warranty is limited to repairing or replacing (at CSI's option) products which have been returned prepaid to CSI. CSI will return warranted equipment by surface carrier prepaid. This warranty shall not apply to any CSI products which have been subjected to modification, misuse, neglect, accidents of nature, or shipping damage. Batteries are not warranted. Under no circumstances will CSI reimburse the claimant for costs incurred in removing and/or reinstalling equipment. This warranty, and CSI's obligation thereunder, is in lieu of all other warranties of suitability and fitness for a particular purpose. CSI is not liable for consequential damages.

CAMPBELL SCIENTIFIC, INC.

815 W 1800 N · Logan, UT 84321-1784 · USA · (435) 753-2342
FAX (435) 750-9540 · www.campbellsci.com
Fed. I.D. #87-0305157 · DUNS#06-798-0730

*** Please reference our Quote number on your Purchase Order ***

PROFORMA INVOICE **PRICE QUOTATION**

Quote Number: 47799
Quote Date: 06-JUN-05
Page: 5 of 5
Valid Through: 05-AUG-05

USER ADDRESS:
ROGER DENICK
BURGESS & NIPLE
5085 REED RD
COLUMBUS, OH 43220

TEL: (614) 459-2050
FAX: (614) 451-1385

RFQ#	Terms	Freight Terms	Est. Ship Date	CSI Contact
	UPON APPROVAL	PREPAID & ADD	45 DAYS ARO	DAVE MEEK

Line	Item	**CO	Description	Qty Ord	Unit	Selling Price	Ext. Price
40	CH100	US	CH100 12V CHARGER/REGULATOR	1	EACH	189.75	189.75
41	BP12	TW / CI	BP12 12V SEALED RECHARGEABLE BATTERY, 12AHR	1	EACH	109.25	109.25
42	MSX10	CN	MSX10 10W SOLAR PANEL, 15FT CABLE	1	EACH	230.00	230.00
43	15875	US	ENC 12/14 WEATHER-RESISTANT ENCLOSURE 12 X 14 INCH	1	EACH	224.25	224.25
43	5961	US	ENC 12/14 OPTION W/1 CONDUIT FOR CABLES	1	EACH	0.00	0.00
43	7839	US	ENCLOSURE MOUNTS SINGLE NOTCH FOR ENC 12/14 FOR USE W/CM6, CM10, OR TOWERS	1	EACH	40.25	40.25
44	SPECIAL-AE	--	- - WIRELESS SYSTEM PRE-CONFIGURATION/TESTING/DOCUMENTATION	1	EACH	500.00	500.00
45	NOTE		- - ---- PC SUPPORT SOFTWARE & CABLE ---	1	EACH	0.00	0.00
46	LOGGERNET	US	LOGGERNET DATALOGGER SUPPORT SOFTWARE	1	EACH	626.75	626.75

Subtotal:	$10,535.24
Tax:	$ .00
* TOTAL USD *	$10,535.24

AUTHORIZED SIGNATURE

**Country Of Origin

X

WARRANTY POLICY: CSI warrants products manufactured by CSI to be free from defects in materials and workmanship under normal use and service for twelve (12) months from date of shipment unless specified otherwise, subject to the following conditions: CSI's obligation under this warranty is limited to repairing or replacing (at CSI's option) products which have been returned prepaid to CSI. CSI will return warranted equipment by surface carrier prepaid. This warranty shall not apply to any CSI products which have been subjected to modification, misuse, neglect, accidents of nature, or shipping damage. Batteries are not warranted. Under no circumstances will CSI reimburse the claimant for costs incurred in removing and/or reinstalling equipment. This warranty, and CSI's obligation thereunder, is in lieu of all other warranties of suitability and fitness for a particular purpose. CSI is not liable for consequential damages.

Wind Speed and Direction Sensors

R.M. Young's Wind Sentry, 03001 Anemometer and Vane, 03101 Anemometer

The Wind Sentry Anemometer and Vane accurately measure wind speed and direction. These sensors interface directly with Campbell dataloggers; no signal conditioning is required. Compatible dataloggers include the CR200-series, CR510, CR10(X), CR1000, CR23X, CR7, CR5000, and CR9000X.

The cup anemometer measures wind speed. Rotation of its cup wheel produces an ac sine wave that is directly proportional to wind speed. The frequency of the ac signal is measured by a datalogger pulse count channel, then converted to engineering units (mph, m/s, knots). The Campbell Scientific version uses shielded bearings which lowers the anemometer's threshold.

Wind direction is sensed by a potentiometer. With the precision excitation voltage from the datalogger applied to the potentiometer element, the output signal is an analog voltage that is directly proportional to azimuth of the wind direction.

An ideal application for the Wind Sentry is Wind Profile Studies. For this application, the LLAC4 4-channel Low Level AC Conversion Module can be used to increase the number of Wind Sentrys measured by one datalogger. The LLAC4 allows datalogger control ports to read the anemometer's ac signals instead of using pulse channels. Dataloggers compatible with the LLAC4 are the CR200-series (ac signal ≤ kHz only), CR1000, CR23X and CR5000.

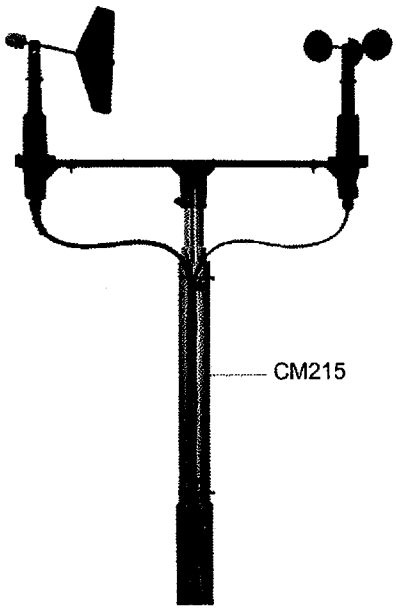

The Wind Sentry can sit atop an aluminum tripod via the CM215.

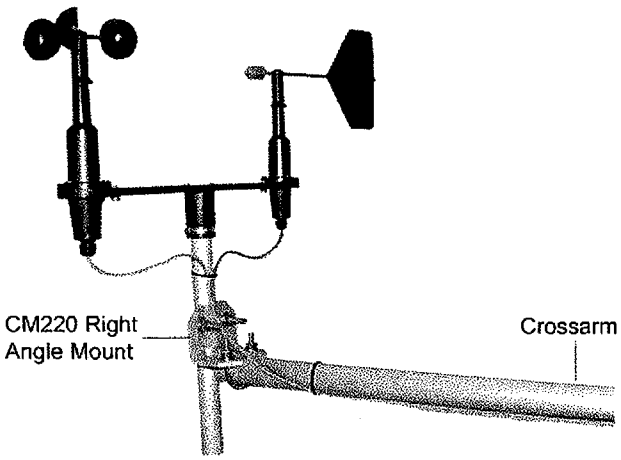

The 03001 is secured to one end of the CM206 Crossarm with the CM220 Right Angle Bracket.

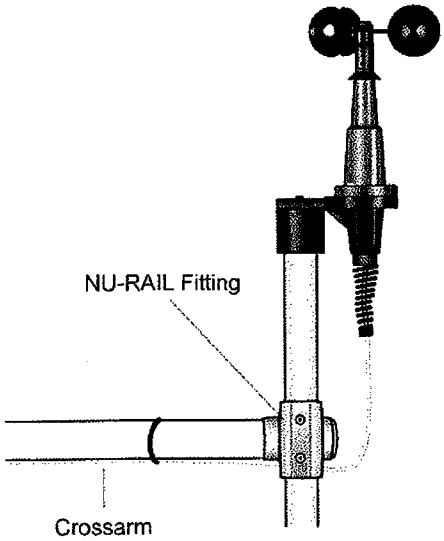

When purchased separately, the Wind Sentry Anemometer is supplied with a galvanized 10" x 3/4" -diameter threaded pipe, which mounts to a crossarm via the 1049 NU-RAIL fitting or CM220 Mount. Alternately it can mount to an aluminum tripod via the CM215.

CAMPBELL SCIENTIFIC, INC.
815 W. 1800 N. • Logan, Utah 84321-1784 • (435) 753-2342 • FAX (435) 750-9540 • www.campbellsci.com

Ordering Information

Wind Sentry Options

03001-L_	Wind Sentry Set; enter wind speed lead length, in feet, after the L, then enter wind direction lead length
03101-L_	Wind Sentry Anemometer; enter lead length, in feet, after the L.

Mounts

1049	¾" x 1" NU-RAIL Fitting for attaching the Wind Sentry to a horizontal crossarm, such as a CM202, CM204, or CM206.
17907	CM220 Right Angle Mounting Bracket for attaching the Wind Sentry to a horizontal crossarm, such as a CM202, CM204, or CM206.
17929	CM215 Sensor Mounting Kit for attaching sensor to the top of a CM110, CM115, or CM120 aluminum tripod.

Wind Speed (Anemometer) Specifications

Range:	0 to 50 m s^{-1} (112 mph), gust survival 60 m s^{-1} (134 mph)
Sensor:	12 cm diameter cup wheel assembly, 40 mm diameter hemispherical cups
Accuracy:	±0.5 m s^{-1} (1.1 mph)
Turning Factor:	75 cm (2.5 ft)
Distance Constant (63% recovery):	2.3 m (7.5 ft)
Threshold:	0.5 m s^{-1} (1.1 mph)
Transducer:	Stationary coil, 1350 ohm nominal resistance
Transducer Output:	AC sine wave signal induced by rotating magnet on cup wheel shaft 100 mV peak-to-peak at 60 rpm; 6 V peak-to-peak at 3600 rpm
Output Frequency:	1 cycle per cup wheel revolution; 0.75 m s^{-1} per Hz
Cup Wheel Diameter:	12 cm (4.7 in)
Weight:	113 g (4 oz)

Wind Direction (Vane) Specifications

Range:	360° mechanical, 355° electrical (5° open)
Sensor:	Balanced vane, 16 cm turning radius
Accuracy:	±5°
Damping Ratio:	0.2
Delay Distance (50% recovery):	0.5 m (1.6 ft)
Threshold	0.8 m s^{-1} (1.8 mph) at 10° displacement 1.8 m s^{-1} (4 mph) at 5° displacement
Transducer:	Precision conductive plastic potentiometer; 10 kohm resistance; 0.5% linearity; life expectancy 20 million revolutions. Rated 1 watt at 40°C, 0 watts at 125°C.
Transducer Output:	Analog dc voltage proportional to wind direction angle with regulated excitation voltage supplied by the datalogger
Vane Length:	22 cm (8.7 in)
Vane Weight:	170 g (6 oz)

Wind Sentry Assembly Specifications

Operating Temperature:	-50° to +50°C assuming non-riming conditions
Overall Height:	32 cm (12.6 in)
Crossarm Length:	40 cm (15.7 in) between instruments (center-to-center)
Mounting Diameter:	26.7 mm (1.05 in), mounts on standard 3/4 in. pipe

CAMPBELL SCIENTIFIC, INC.
815 W. 1800 N. • Logan, Utah 84321-1784 • (435) 753-2342 • FAX (435) 750-9540
Offices also located in: Australia • Brazil • Canada • England • France • South Africa • Spain

Copyright © 1994, 2005
Campbell Scientific, Inc.
Printed June 2005

Solar Radiation Sensors

LI-COR's LI190SB Quantum Sensor & LI200X Silicon Pyranometer

LI190SB and LI200X measure solar radiation with a silicon photovoltaic detector mounted in a cosine-corrected head. A shunt resistor in the sensor's cable converts the signal from microAmps to millivolts, allowing the LI190SB and LI200X to be measured directly by a Campbell Scientific datalogger (CR510, CR10(X), CR1000, CR23X, CR5000, and CR7).

LI190SB Quantum Sensor

LI190SB accurately measures Photosynthetic Photon Flux Density (PPFD) in both natural and artificial light. PPFD is the number of photons in the 400 to 700 nm waveband incident per unit time on a unit surface. Because PPFD describes photosynthetic activity, the LI190SB is ideal for growth chambers and greenhouses.

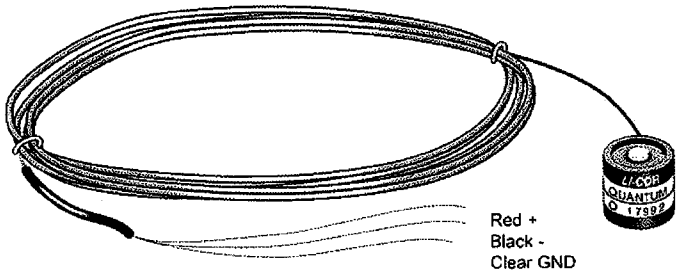

LI190SB Quantum Sensor. The LI200X has a similar appearance and identical wiring.

LI200X Silicon Pyranometer

The LI200X Silicon Pyranometer is calibrated against an Eppley Precision Spectral Pyranometer (PSP) to accurately measure sun plus sky radiation. The LI200X is used extensively in solar, agricultural, meteorological, and hydrological applications. The LI200X should not be used under vegetation or artificial lights because it is calibrated for the daylight spectrum (400 to 1100 nm).

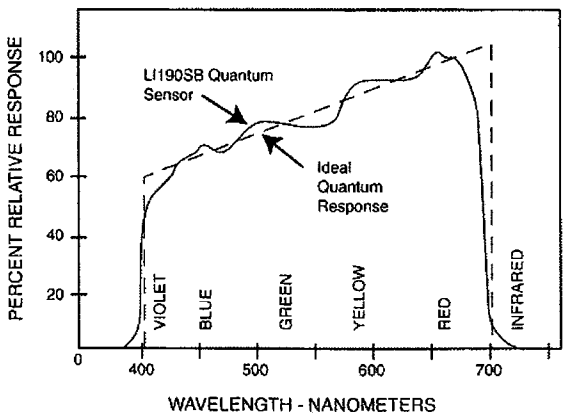

LI190SB Spectral Response

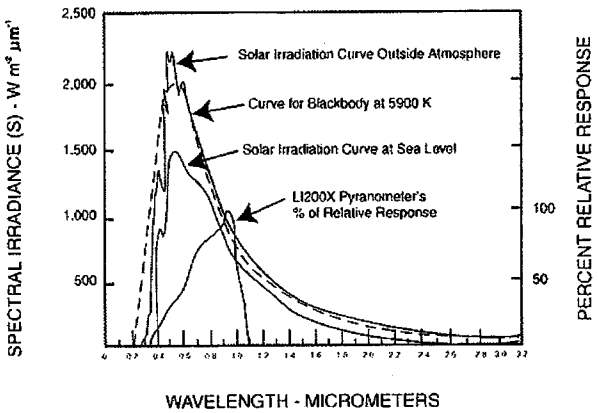

LI200X Spectral Response

CAMPBELL SCIENTIFIC, INC.

815 W. 1800 N. • Logan, Utah 84321-1784 • (435) 753-2342 • FAX (435) 750-9540 • www.campbellsci.com

Sensor Mounts

To ensure accurate measurements, the sensors are leveled with a LI2003S base/ leveling fixture, which incorporates a bubble level and three adjusting screws. The LI2003S mounts to a tripod or tower using the CM225 mount. Alternately the sensor can be attached to a 20' or 30' tower via a UTLI and UT018.

To attach the CM225 to a horizontal crossarm, such as a CM202, CM204, CM206, or 019ALU, place the u-bolt in the holes on the bottom of the bracket. ➤

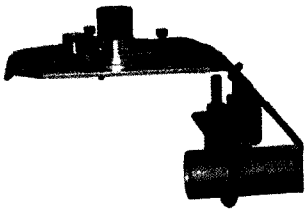

To attach the CM225 to a vertical mast or pole, place the u-bolt in the holes in the side of the bracket.

Ordering Information

LI190SB-L	Quantum Sensor with user specified lead length. Enter the lead length after the L. For example, LI190SB-L11, orders an 11' lead length.
LI200X-L	Silicon Pyranometer with user specified lead length. Enter the lead length after the L. For example, LI200X-L11, orders an 11' lead length.
LI2003S	Base and leveling fixture required to level the sensor.
17906	CM225 Mount for attaching to the LI2003S and sensor to a tripod, tower, or vertical pipe.
UTLI	Leveling Fixture & Crossarm Mount for attaching to the UT018 crossarm.
UT018	Tower Mounting Bracket with 2 ft Crossarm for attaching to a 20' or 30' tower.

Common Specifications

Stability: < ±2% change over a 1 year period
Response Time: 10 µs
Temperature Dependence: 0.15% per °C maximum
Cosine Correction: Cosine corrected up to 80° angle of incidence
Operating Temperature: -40° to +65°C
Relative Humidity: 0 to 100%
Detector: High stability silicon photovoltaic detector (blue enhanced)
Sensor Housing: Weatherproof anodized aluminum case with acrylic diffuser and stainless steel hardware
Size: 0.94" dia x 1.00" H (2.38 x 2.54 cm)
Weight: 1 oz. (28 g)

LI190SB Specifications

Calibration: ±5% traceable to the U.S. National Institute of Standards Technology (NIST)
Sensitivity: Typically 5 µA per 1000 µmoles s^{-1} m^{-2}
Linearity: Maximum deviation of 1% up to 10,000 µmoles s^{-1} m^{-2}
Shunt Resistor: 604 Ω
Light Spectrum Waveband: 400 to 700 nm

LI200X Specifications

Accuracy: Absolute error in natural daylight is ±5% maximum; ±3% typical
Sensitivity: 0.2 kW m^{-2} mV^{-1}
Linearity: Maximum deviation of 1% up to 3000 W m^{-2}
Shunt Resistor: Adjustable, 40.2 to 90.2 Ω, factory set to give the above sensitivity
Light Spectrum Waveband: 400 to 1100 nm

CAMPBELL SCIENTIFIC, INC.
815 W. 1800 N. • Logan, Utah 84321-1784 • (435) 753-2342 • FAX (435) 750-9540
Offices also located in: Australia • Brazil • Canada • England • France • South Africa

Copyright © 1993, 2005
Campbell Scientific, Inc.
Printed June 2005

Temperature Probes

Models 107 and 108

The 107 and 108 are rugged, accurate probes that measure air, soil, and water temperature in a variety of applications. These probes consist of a thermistor encapsulated in an epoxy-filled aluminum housing. The housing protects the thermistor allowing the probes to be buried or submerged. The 107 measures from -35° to +50°C, the 108 from -5° to +95°C.

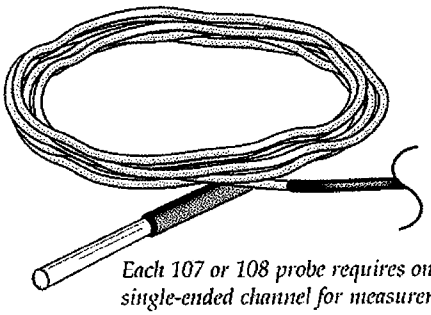

Each 107 or 108 probe requires one single-ended channel for measurement.

Sensor Mounts

When exposed to sunlight, the 107 and 108 probes must be housed in a radiation shield. If the probe is mounted to a CM6/CM10 tripod or a UT10 tower, use a model 41303-5A 6-plate radiation shield. A 41003 10-plate radiation shield and 41322 adapter may also be used when mounted to a tripod or UT10 tower. If the probe is mounted to a UT30 tower, use a UT6P radiation shield and a UT018 Mounting Bracket and Crossarm Mount.

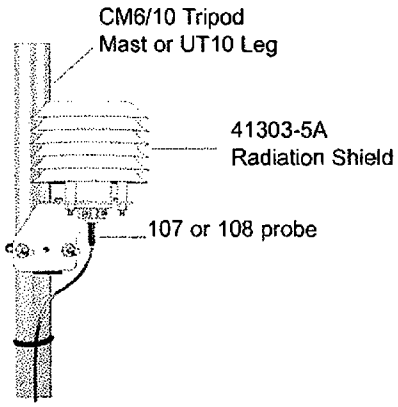

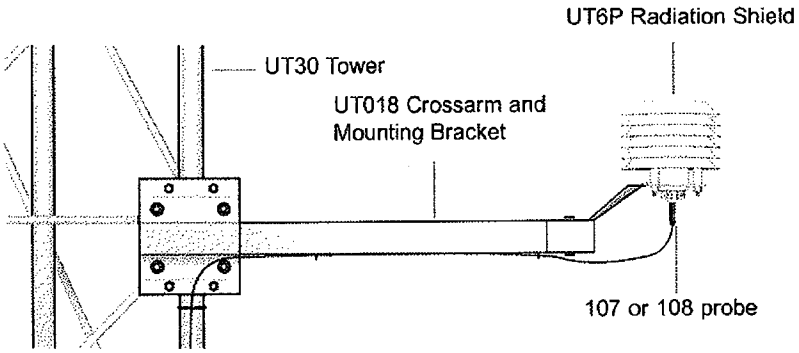

Ordering Information

Probes

107-L 107 Temperature Probe with user-specified lead length; enter the lead length (in feet) after L. Specify a 6' lead length (107-L6) for a 2 m mounting height; specify a 9' lead (107-L9) for 2 m mounting height with UT018 crossarm.

108-L 108 Temperature Probe with user-specified lead length; enter the lead length (in feet) after L. Specify a 6' lead length (108-L6) for a 2 m mounting height; specify a 9' lead (108-L9) for 2 m mounting height with UT018 crossarm.

Radiation Shield

4020 41303-5A 6-Plate Gill Radiation Shield to house a 107 or 108

CAMPBELL SCIENTIFIC, INC.
815 W. 1800 N. • Logan, Utah 84321-1784 • (435) 753-2342 • FAX (435) 750-9540 • www.campbellsci.com

Specifications

Weight:	0.3 lbs
Length:	3.125"
Diameter:	< 0.375"
Sensor:	BetaTherm 100K6A1 Thermistor

107 Probe

Temperature measurement range:	-35° to +50°C
Polynomial linearization accuracy:	Typically <±0.5°C over -38° to +50°C range, <±0.1°C over -24° to +48°C range
Interchangeability error:	Typically <±0.2°C over 0° to 50°C range increasing to ±0.4°C at -40°C
Time constant in air:	Between 30 and 60 seconds in a wind speed of 5 m sec^{-1}

108 Probe

Temperature measurement range:	-5° to +95°C
Polynomial linearization accuracy:	Typically <±0.5°C at the -5° to +90°C range
Interchangeability error:	Typically <±0.2°C over 0° to 70°C range increasing to ±0.3°C at 95°C
Time constant in air:	Between 30 and 60 seconds in a wind speed of 5 m sec^{-1}

Note: The 107B and 108B probes have become obsolete because the 107 and 108 probes can now measure soil and water temperature.

CAMPBELL SCIENTIFIC, INC.
815 W. 1800 N. • Logan, Utah 84321-1784 • (435) 753-2342 • FAX (435) 750-9540
Offices also located in: Australia • Brazil • Canada • England • France • South Africa • Spain

Copyright © 1997, 2005
Campbell Scientific, Inc.
Printed May 2005

Temperature and Relative Humidity Probe
Model HMP50

The HMP50, manufactured by Vaisala, measures air temperature with a 1000 ohm platinum resis-tance thermometer (PRT), and RH with the INTERCAP® capacitive chip. The chip is field-replaceable, as needed, and eliminates the downtime typically required for the recalibration process.

Sensor Mounts

When exposed to sunlight, the HMP50 must be housed in a 6-plate radiation shield, typically the 41303-5A. The 41303-5A radiation shield attaches to a tripod mast or tower leg. Alternately the HMP50 can be housed in the UT6P radiation shield, and then attached to a 20' or 30' tower via the UT018 Crossarm

Ordering Information

HMP50-L	Temperature and RH Probe with user-specified lead length. Enter the lead length, in feet, after the -L. For example, HMP60-L6 orders a 6 ft lead length.
9598	Replacement chip for the HMP50.
4020	41303-5A 6-Plate Gill Radiation Shield
UT6P	6-plate Radiation Shield that attaches to the UT018 Crossarm
UT018	Tower Mounting Bracket with 2 ft Cross-arm for attaching to a 20' or 30' tower.

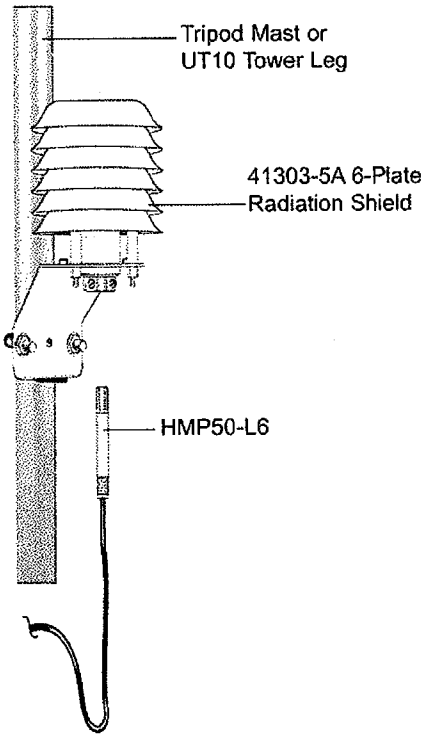

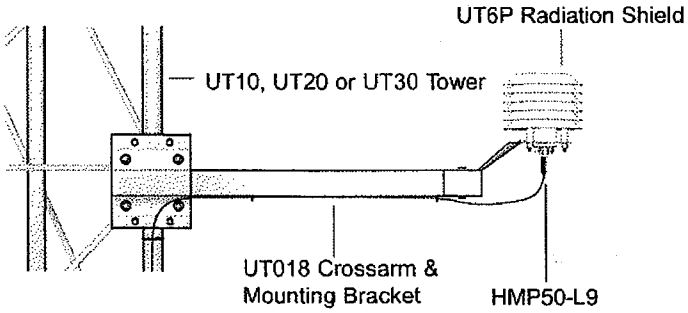

CAMPBELL SCIENTIFIC, INC.
815 W. 1800 N. • Logan, Utah 84321-1784 • (435) 753-2342 • FAX (435) 750-9540 • www.campbellsci.com

Specifications

Relative Humidity

Operating Range: 0 to 98% RH

Accuracy: 0-90% range: ±3.0%
90-98% range: ±5.0%

Temperature Dependence of Relative Humidity Measurement:

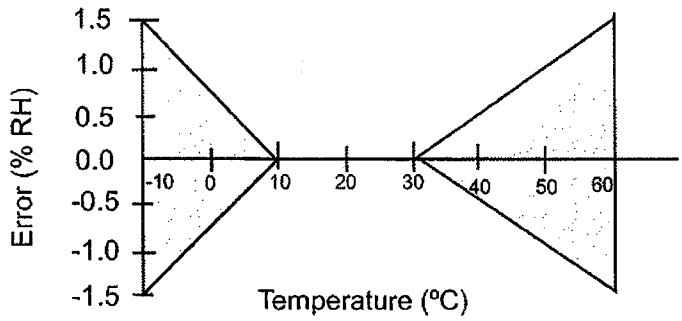

Typical Long-Term Stability: Better than ±1% RH per year

Temperature

Measurement Range: -25° to +60°C

Temperature Accuracy:

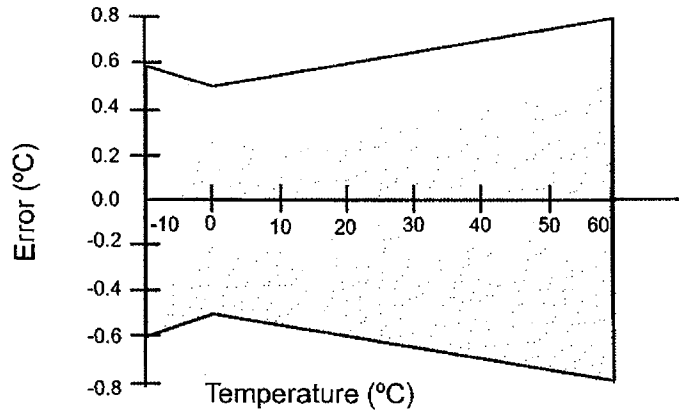

General

Supply Voltage: 7 to 28 Vdc (typically powered by datalogger's 12 V supply)

Current Consumption: 2 mA typical

Diameter: 0.47" (1.2 cm)

Length: 2.8" (7.1 cm)

Housing Material: chrome-coated aluminum and chrome-coated ABS plastic

CAMPBELL SCIENTIFIC, INC.
815 W. 1800 N. • Logan, Utah 84321-1784 • (435) 753-2342 • FAX (435) 750-9540
Offices also located in: Australia • Brazil • Canada • England • France • South Africa • Spain

Copyright © 2005
Campbell Scientific, Inc.
Printed June 2005

Rain Gages

Models TE525WS, TE525, TE525MM

The TE525 series tipping bucket rain gages are manufactured by Texas Electronics. Both the TE525WS and TE525 measure in 0.01 inch increments; the TE525MM measures in 0.1 mm increments. These gages funnel precipitation into a bucket mechanism that tips when filled to a calibrated level. A magnet attached to the tipping mechanism actuates a switch as the bucket tips. The momentary switch closure is counted by the pulse-counting circuitry of Campbell Scientific dataloggers.

The TE525WS and TE525 are compatible with Campbell Scientific's CS705 Snowfall Conversion Adapter which allows you to measure the water content of snow. The TE525 requires a recalibration when the CS705 is added or removed; the TE525WS does not. The TE525MM is not compatible with the CS705. For more information about the CS705, refer to the CS705 product literature.

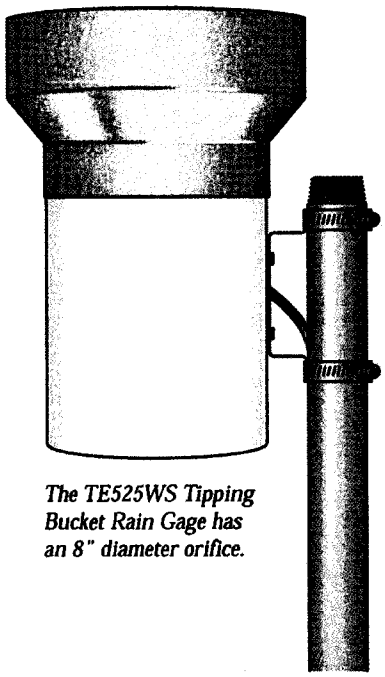

The TE525WS Tipping Bucket Rain Gage has an 8" diameter orifice.

Mounting

The gage mounts to a user-supplied threaded pole. Accurate measurements require the gages to be level.

Ordering Information

TE525WS-L__	8-inch diameter; 0.01 inch tips; user-specified lead length.* Enter lead length (in feet) after L.
TE525-L__	6-inch diameter; 0.01 inch tips; user-specified lead length.* Enter lead length (in feet) after L.
TE525MM-L__	24.5 cm diameter; 0.1 mm tips; user-specified lead length.* Enter lead length (in feet) after L.

To measure frozen precipitation with the TE525WS please consider the CS705 Snowfall Conversion Adapter.

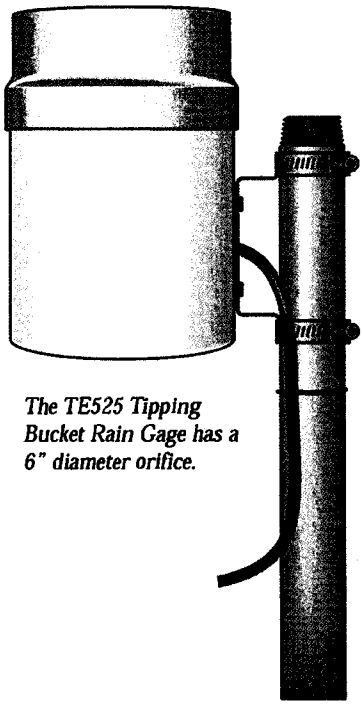

The TE525 Tipping Bucket Rain Gage has a 6" diameter orifice.

**A 25' lead length is recommended for most applications, e.g. TE525WS-L25.*

CAMPBELL SCIENTIFIC, INC.
815 W. 1800 N. • Logan, Utah 84321-1784 • (435) 753-2342 • FAX (435) 750-9540 • www.campbellsci.com

Specifications

Sensor type:	Tipping bucket/magnetic reed switch
Material:	Anodized aluminum
Temperature:	0° to +50°C
Resolution:	1 tip
Cable:	2-conductor shielded cable

	TE525WS	TE525	TE525MM	
Rainfall per tip:	0.01" (0.254 mm)	0.01" (0.254 mm)	0.004" (0.1 mm)	
Orifice diameter:	8" (20.3 cm)	6.06" (15.4 cm)	9.66" (24.5 cm)	
Height:	10.5" (26.7 cm)	9.5" (24.1 cm)	11.5" (29.21 cm)	
Weight:	2.5 lbs. (1.1 kg)	2.5 lbs. (1.1 kg)	2.7 lbs. (1.2 kg)	
Accuracy:				
Up to 1 inch/hr:	±1%	±1%	Up to 10 mm/hr:	±1%
1 to 2 inch/hr:	+0, -2.5%	+0, -3%	10 to 20 mm/hr:	+0, -3%
2 to 3 inch/hr:	+0, -3.5%	+0, -5%	20 to 30 mm/hr:	+0, -5%

CAMPBELL SCIENTIFIC, INC.
815 W. 1800 N. • Logan, Utah 84321-1784 • (435) 753-2342 • FAX (435) 750-9540
Offices also located in: Australia • Brazil • Canada • England • France • South Africa • Spain

Copyright © 1990, 2002
Campbell Scientific, Inc.
Printed March 2002

CR1000 *Measurement and Control System*

A Rugged Instrument with Research-Grade Performance

CAMPBELL SCIENTIFIC, INC.

815 W. 1800 N. • Logan, Utah 84321-1784 • (435) 753-2342 • FAX (435) 750-9540 • www.campbellsci.com

CR1000 Measurement and Control System

The CR1000 provides precision measurement capabilities in a rugged, battery-operated package. It consists of a measurement and control module and a wiring panel.

Features

- 2 Mbytes standard memory; 4 Mbytes optional memory
- Program execution rate of up to 100 Hz
- CS I/O and RS-232 serial ports
- 13-bit analog to digital conversions
- 16-bit H8S Hitachi Microcontroller with 32-bit internal CPU architecture
- Temperature compensated real-time clock
- Background system calibration for accurate measurements over time and temperature changes
- Single DAC used for excitation and measurements to give ratio metric measurements
- Gas Discharge Tube (GDT) protected inputs
- Data values stored in tables with a time stamp and record number
- Battery-backed SRAM memory and clock ensuring data, programs, and accurate time are maintained while the CR1000 is disconnected from its main power source
- Measures intelligent serial sensors without using an SDM-SIO4

The CR1000's power consumption and packaging are optimized for unattended network applications.

Storage Capacity

The CR1000 has 1 Mbyte of FLASH memory for the Operating System. The standard CR1000 provides 2 Mbytes battery-backed SRAM for CPU usage, program storage, and data storage; an optional version provides 4 Mbytes of SRAM. Data is stored in a table format. The storage capacity of the CR1000 can be increased by using a CompactFlash® card.

12-Volt Powered

Any 12 Vdc source can power the CR1000; it typically uses our BPALK or PS100 power supply. The BPALK consists of eight D-cell batteries, and the PS100 includes a sealed rechargeable battery that can be float-charged with a solar panel or ac power.

Datalogger Programming

The onboard, BASIC-like programming language supports data processing and analysis routines. Compatible software includes Short Cut, PC400, and LoggerNet. Short Cut generates straightforward datalogger programs in four steps. PC400 and LoggerNet software support datalogger program creation/editing, data retrieval, and real-time monitoring.

Input Output Terminals

Analog Inputs: Eight differential (16 single-ended) channels measure voltage levels. Resolution on the most sensitive range is 0.67 µV.

Pulse counters: Two pulse channels can count pulses from high level (5 V square wave), switch closure, or low level ac signals.

Switched voltage excitations: Three outputs provide precision excitation voltages for resistive bridge measurements.

Digital I/O ports: Eight ports are provided for frequency measurements, digital control, and triggering. Three of these ports can also be used to measure SDM devices.

Switched 12 Volt: This terminal provides unregulated 12 V that can be switched on and off under program control.

RS-232 port: A PC or laptop can be connected to this 9-pin port via an RS-232 cable.

CS I/O port: Data transfer peripherals that require power from the datalogger can be connected to this port via a cable. This port is also used for connecting the datalogger to a PC via an SC32B interface when optical isolation is required.

Peripheral Port: One 40-pin port interfaces with the CFM100 CompactFlash® module.

Operation in Harsh Environments

The standard operating range is -25° to +50°C; an extended range of -55° to +85°C is available. A CR1000 housed in an environmental enclosure with desiccant is protected from humidity and most contaminants.

Communication Protocols

The CR1000 supports the PakBus® communication protocol. PakBus networks have the distributed routing intelligence to continually evaluate links. Continually evaluating links optimizes delivery times and, in the case of delivery failure, allows automatic switch over to a configured backup route. The CR1000 also supports the Modbus protocol, which allows the CR1000 to work with "off the shelf" Modbus software packages.

Communications

Compatible telecommunication options include Ethernet, phone modems (land-line and cellular), radios, short haul modems, GOES satellite transmitters, and multi-drop modems. Real-time and historical data can be displayed on-site using a Palm OS-based PDA (requires PConnect 3.1), the CR1000KD Keyboard/Display, or a PC. The PC connects to the CR1000 via an RS-232 cable, or if optical isolation is required, via the CS I/O port and SC32B interface.

Customers can transport programs/data to a PC via CompactFlash® cards. The CFM100 module is used to store the programs/data on the card, and a SanDisk® ImageMate® card reader is used to download the programs/data to the PC.

Channel Expansion

Synchronous Devices for Measurement (SDMs)

SDMs are addressable peripherals that expand the CR1000's measurement and control capabilities. For example, SDMs are available to add control ports, analog outputs, pulse count channels, interval timers, or even a CANbus interface to your system. Multiple SDMs, in any combination, can be connected to one CR1000 datalogger.

Multiplexers

Multiplexers increase the number of sensors that can be measured by a CR1000 by sequentially connecting each sensor to the datalogger. Several multiplexers can be controlled by a single CR1000. The CR1000 is compatible with the AM16/32 and AM25T.

Applications

- Eddy covariance systems
- Wireless sensor/datalogger networks
- Mesonet systems
- Wind profiling
- Vehicle testing
- Long-term climatological monitoring, meteorological research, routine weather measurement
- Air quality
- Agriculture, agriculture research
- Soil moisture, Time Domain Reflectometry
- Water level/stage
- Aquaculture
- Water quality
- Avalanche forecasting, snow science, polar, high altitude
- Fire weather
- Geotechnical
- Historic preservation

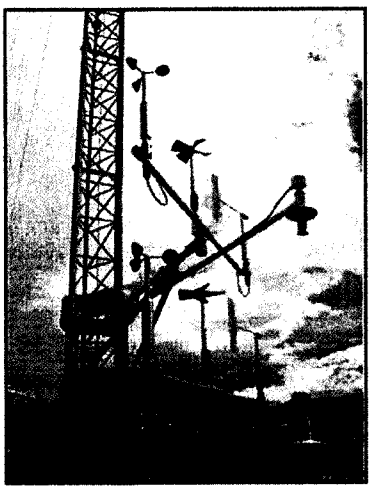

The CR1000 is compatible with the LLAC4 Low-Level AC Conversion Module. Use of the LLAC4 allows more wind sensors to be measured for wind profiling applications. Wind profiling helps customers determine if a site is a good candidate for harvesting wind.

CR1000 Specifications

Electrical specifications are valid over a -25° to +50°C range unless otherwise specified; non-condensing environment required. To maintain electrical specifications, Campbell Scientific recommends recalibrating dataloggers every two years.

PROGRAM EXECUTION RATE

10 ms to 30 min. @ 10 ms increments

ANALOG INPUTS

8 differential (DF) or 16 single-ended (SE) individually configured. Channel expansion provided by AM16/32 and AM25T multiplexers.

RANGES, RESOLUTION AND TYPICAL INPUT NOISE: Basic resolution (Basic Res) is the A/D resolution of a single conversion. **Resolution of DF measurements with input reversal is half the Basic Res.** Noise values are for DF measurements with input reversal; noise is greater with SE measurements.

Input Range (mV)	*Basic Res (µV)*	*250 µs Int. (µV RMS)*	*50/60 Hz Int. (µV RMS)*
±5000	1330	385	192
±2500	667	192	95.9
±250	66.7	19.2	19.2
±25	6.7	2.3	1.9
±7.5	2	0.62	0.58
±2.5	0.67	0.34	0.19

ACCURACY[1]:
±(0.07% of reading + offset), 0° to 40°C
±(0.14% of reading + offset), -25° to 50°C
±(0.2% of reading + offset), -55° to 85°C (-XT only)

MINIMUM TIME BETWEEN VOLTAGE MEASUREMENTS: Includes the measurement time and conversion to engineering units. For voltage measurements, the CR1000 integrates the input signal for 0.25 ms or a full 16.66 ms or 20 ms line cycle for 50/60 Hz noise rejection. DF measurements with input reversal incorporate two integrations with reversed input polarities to reduce thermal offset and common mode errors and therefore take twice as long.

250 µs Analog Integration: ~1 ms SE
1/60 Hz Analog Integration: ~20 ms SE
1/50 Hz Analog Integration: ~25 ms SE

COMMON MODE RANGE: ±5 V

DC COMMON MODE REJECTION: >100 dB

NORMAL MODE REJECTION: 70 dB @ 60 Hz when using 60 Hz rejection

SUSTAINED INPUT VOLTAGE W/O DAMAGE: ±16 Vdc max.

INPUT CURRENT: ±1 nA typical, ±6 nA max. @ 50°C; ±90 nA @ 85°C

INPUT RESISTANCE: 20 Gohms typical

ACCURACY OF BUILT-IN REFERENCE JUNCTION THERMISTOR (for thermocouple measurements):
±0.3°C, -25° to 50°C
±0.8°C, -55° to 85°C (-XT only)

ANALOG OUTPUTS

3 switched voltage, active only during measurement, one at a time.

RANGE AND RESOLUTION: Voltage outputs programmable between ±2.5 V with 0.67 mV resolution.

ACCURACY: ±(0.07% of setting + 0.8 mV), 0° to 40°C
±(0.14% of setting + 0.8 mV), -25° to 50°C
±(0.2% of setting + 0.8 mV), -55° to 85°C (-XT only)

CURRENT SOURCING/SINKING: ±25 mA

RESISTANCE MEASUREMENTS

MEASUREMENT TYPES: The CR1000 provides ratiometric measurements of 4- and 6-wire full bridges, and 2-, 3-, and 4-wire half bridges. Precise, dual polarity excitation using any of the 3 switched voltage excitations eliminates dc errors.

RATIO ACCURACY[1]: Assuming excitation voltage of at least 1000 mV, not including bridge resistor error.

$$\pm(0.04\% \text{ of reading} + \text{Offset}/V_{ex})$$

Offset values are reduced by a factor of 2 when excitation reversal is used.

PERIOD AVERAGING MEASUREMENTS

The average period for a single cycle is determined by measuring the average duration of a specified number of cycles. The period resolution is 192 ns divided by the specified number of cycles to be measured; the period accuracy is ±(0.01% of reading + resolution). Any of the 16 SE analog inputs can be used for period averaging. Signal limiting are typically required for the SE analog channel.

INPUT FREQUENCY RANGE:

Input Range	*Signal (peak to peak)[2] Min*	*Max*	*Min. Pulse W.*	*Max[3] Freq.*
±2500 mV	500 mV	10 V	2.5 µs	200 kHz
±250 mV	10 mV	2 V	10 µs	50 kHz
±25 mV	5 mV	2 V	62 µs	8 kHz
±2.5 mV	2 mV	2 V	100 µs	5 kHz

PULSE COUNTERS

Two 24-bit inputs selectable for switch closure, high frequency pulse, or low-level ac.

MAXIMUM COUNTS PER SCAN: 16.7×10^6

SWITCH CLOSURE MODE:
Minimum Switch Closed Time: 5 ms
Minimum Switch Open Time: 6 ms
Max. Bounce Time: 1 ms open w/o being counted

HIGH FREQUENCY PULSE MODE:
Maximum Input Frequency: 250 kHz
Maximum Input Voltage: ±20 V
Voltage Thresholds: Count upon transition from below 0.9 V to above 2.2 V after input filter with 1.2 µs time constant.

LOW LEVEL AC MODE: Internal ac coupling removes dc offsets up to ±0.5 V.

Input Hysteresis: 16 mV @ 1 Hz
Maximum ac Input Voltage: ±20 V
Minimum ac Input Voltage:

Sine wave (mV RMS)	*Range (Hz)*
20	1.0 to 20
200	0.5 to 200
2000	0.3 to 10,000
5000	0.3 to 20,000

DIGITAL I/O PORTS

8 ports software selectable, as binary inputs or control outputs. C1-C8 also provide edge timing, subroutine interrupts/wake up, switch closure pulse counting, high frequency pulse counting, asynchronous communications (UART), SDI-12 communications, and SDM communications.

HIGH FREQUENCY MAX: 400 kHz

SWITCH CLOSURE FREQUENCY MAX: 150 Hz

OUTPUT VOLTAGES (no load): high 5.0 V ±0.1 V; low <0.1

OUTPUT RESISTANCE: 330 ohms

INPUT STATE: high 3.8 to 5.3 V; low -0.3 to 1.2 V

INPUT HYSTERISIS: 1.4 V

INPUT RESISTANCE: 100 kohms

SDI-12 INTERFACE SUPPORT

Control ports 1, 3, 5, and 7 may be configured for SDI-12 asynchronous communications. Up to ten SDI-12 sensors are supported per port. It meets SDI-12 Standard version 1.3 for datalogger mode.

CE COMPLIANCE

STANDARD(S) TO WHICH CONFORMITY IS DECLARED: BS EN61326:2002

CPU AND INTERFACE

PROCESSOR: Hitachi H8S 2322 (16-bit CPU with 32-bit internal core)

MEMORY: Battery-backed SRAM; 2 Mbytes, 16 kbytes for program storage; 4 Mbytes optional

SERIAL INTERFACES: COM1 (CS I/O, used to interface with Campbell Scientific peripherals), COM2 (standard RS-232 communication port)

PARALLEL INTERFACE: 40-pin interface for attaching data storage or communication peripherals such as the CFM100 module

BAUD RATES: Selectable from 300 bps to 115.2 kbps. ASCII protocol is one start bit, one stop bit, eight data bits, and no parity.

CLOCK ACCURACY: ±3 min. per year (-30° to 85°C); ±15 min. per year (-55° to 85°C, -XT only)

SYSTEM POWER REQUIREMENTS

VOLTAGE: 9.6 to 16 Vdc

TYPICAL CURRENT DRAIN:
Sleep Mode: ~0.5 mA
1 Hz Sample Rate (one fast SE meas.): ~0.6 mA
100 Hz Sample Rate (one fast SE meas.): ~7.0 mA
100 Hz Sample Rate (one fast SE meas. w/RS-232 communications): <7.0 mA

EXTERNAL BATTERIES: 12 Vdc nominal; reverse polarity protected.

PHYSICAL SPECIFICATIONS

MEASUREMENT & CONTROL MODULE SIZE: 8.5" x 3.9" x 0.85" (21.6 x 9.9 x 2.2 cm)

CR1000WP WIRING PANEL SIZE: 9.4" x 4" x 2.4" (23.9 x 10.2 x 6.1 cm); additional clearance required for serial cable and sensor leads.

WEIGHT: 2.1 lbs (1 kg)

WARRANTY

Three years against defects in materials and workmanship.

---

[1]The sensor and measurement noise are not included and the offsets are the following:
Offset for DF w/input reversal = Basic Res + 1.0 µV
Offset for DF w/o input reversal = 2 Basic Res + 2.0 µV
Offset for SE = 2 Basic Res + 3.0 µV

[2]The signal is centered at the datalogger ground.

[3]The maximum frequency = 1/(Twice Minimum Pulse Width) for 50% of duty cycle signals.

CAMPBELL SCIENTIFIC, INC.
815 W. 1800 N. • Logan, Utah 84321-1784 • (435) 753-2342 • FAX (435) 750-9540
Offices also located in: Australia • Brazil • Canada • England • France • South Africa • Spain

Copyright © 2004, 2005
Campbell Scientific, Inc.
Printed April 2005

Preliminary Quotation

ZENO® Weather Station

A Versatile, Professional Weather Station Designed for Ease of Use and Future Upgrade.

Coastal Environmental Systems, Inc.
820 First Avenue South ♦ Seattle, Washington 98134
www.CoastalEnvironmental.com

Quotation Number: KP – 122b *Rev.Date:* *PRICES GUARANTEED FOR ONE YEAR*

PREPARED FOR:
Roger Denick
Burgess & Niple
5085 Reed Road
Columbus, OH 43220
RDenick@bumip.com

PREPARED BY:
Kelly Paletta, Products Manager
800-488-8291 x170
kpaletta@CoastalEnvironmental.com

TERMS: Net 30 (OAC)
STANDARD DELIVERY: 30 - 60 Days ARO
SHIPPING: Prepaid/Add, FOB Seattle, WA

Part Number	Weather Station Data	Commercial Price	Net Price
S1034	ZENO®-3200 Datalogger - w/Housing and Wiring Panel * 32-bit microcontroller, Motorola 68332, 16MHz, Full floating point arithmetic, 16Kb data storage memory * 14 single-ended analog inputs (7 differential) 18 bit resolution, 1-90 samples per second sofware selectable * 2 single-ended, 12 bit resolution input channels * 8 user configurable digital input channels * 6 general purpose digital input/output channels * 1 tipping bucket rain gauge input * Switched excitation AND switched power outputs * Hardware AND Software watchdog timer and power monitor * Real-time clock, battery-backed * Universal Serial Interface	1,205.56	1,130.99
S1214Z	ZENO®-3200 Full Serial I/O Ports, up to 5 serial ports depending on configuration and FREE Universal Serial Interface - configurable on any port in single or multi-drop mode	236.84	223.88
S1288	ZENOSOFT® - Operating system software for ZENO®-3200. Contains menus and parameter setups for sensors, processes and data outputs.	247.37	233.83
S1122Z	CABLE - communications cable for ZENO®-3200 to PC DB9 to DB9, w/adapter, Std.	38.89	36.48
S1036	MEMORY - ZENO®-3200, 1-Mbyte Option of SRAM	178.40	169.06
S1329	MET-EXPERT Firmware: The ZENO - 3200® examines data from each and every sensor to detect common faults and ensure that the sensor is operating within range. If it is not, an alarm message is sent out and logged in the data.	477.89	451.73
S1027ZA	ENCLOSURE - ZENO®-3200, NEMA-4, Fiberglass, for agricultural stations, includes back plate and marine grade feed-throughs for up to 4 sensors	422.22	396.11
S1104Z	SENSOR - Wind Monitor speed, direction, gust, much more...- Prop and vane style	866.67	813.06
S1276Z	SENSOR - Relative humidity and air temperature, +/-3% and +/- 0.4 degrees C accuracy	742.22	696.31
S1081Z	SENSOR - Barometric Pressure, m/n IC 1220A, ±3 mBars	489.47	462.68
S1068Z	SENSOR - Precipitation, Tipping Bucket 6", resolution 0.01 inch	433.68	409.94
S1282	SENSOR - SOIL temperature, embedded thermistor type	75.56	70.88
~~S0429~~	~~SENSOR - Soil moisture TDR (qty 2 @$640 ea)~~	~~2,055.00~~	~~1,837.60~~
~~S1076Z~~	~~SENSOR - Present weather sensor, WIVIS optical sensor~~	~~8,000.00~~	~~7,365.19~~
S1114Z	SENSOR - Solar Radiation, m/n LI200SZ, Shortwave ± 10%	498.89	468.03
S1026	POWER SUPPLY - ZENO®-3200, Int, 110 VAC 12 VDC with battery backup, includes charger	231.58	218.90
S1138I	SOFTWARE - INTERCEPT® Enhanced	480.00	456.00
S80021	SPECIAL ENGINEERING SERVICES: Configuration and test	450.00	375.00
S1194ZA	TOWER - Heavy duty, 3 meter, for ZENO®-3200, includes mounting hardware for ZENO® and agricultural	510.53	482.58
	Total:	**$17,640.77**	**$16,457.65**

Continued on following page

Part Number	Selected Options	Commercial Price	Net Price
S1073	ZENO®-3200 Transient Protection, All I/O Lines	342.11	323.38
S9973	SENSOR: Present Weather Laser Drisdometer (Optional substitute for S1376Z listed above)	5,675.00	4,960.00

Please Note - Many factors are used to determine the proper solar panel and battery combination for a given system...geographic location, operating temperatures, radio transmission schemes, sampling rate, etc. The solar panel and battery included in this quote is only an example. We will calculate a "power budget" at a later date. When the design is finalized the system may require a different solar/ battery configuration than the one listed here.

INTERCEPT™ PC Software

Coastal Environmental Systems' INTERCEPT™ software is your window in to the data collected by one or many ZENO® 3200 or WEATHERPAK® systems. INTERCEPT™ can be used for real-time monitoring and long-term analysis of environmental conditions. It can also forward real-time data regarding hazardous or unusual conditions.

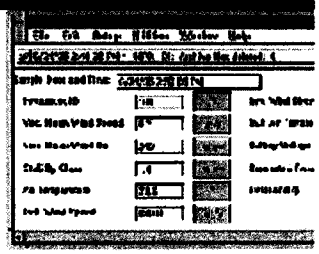

INTERCEPT™ Sc
from HazMat WEATHERPA

INTERCEPT™ Will:

- Gather and display the latest data collected by your Data Acquisition Systems.
- Transfer data to other Microsoft Windows™ applications for further display and analysis.
- Check the data for alarm setpoints in real-time, and issue alarm messages accordingly.
- Archive the data to disk.
- Because it is a Windows product - with full, context-sensitive, help facilities - INTERCEPT™ is easy to learn and operate.

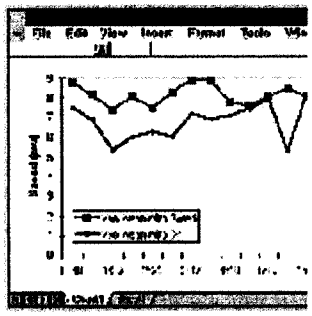

INTERCEPT™ P

INTERCEPT™ Plus maintai easy-to-use features of INTE and has a number of add-or that can be customized for y needs. Multiple serial ports f devices (radio, cell phone ar phone all in the same syster example). Connection to dat archival and reports, custom displays, and auto connectic

Communications and Display Capabilities

INTERCEPT™ receives data in real-time, using a standard or customized ZENO® 3200 or WEATHERPAK® format. The software can also poll your measurement system for missed data, on restart or after interruption. INTERCEPT™ can use a direct line, wireline modem, cellular modem, leased line modem or a radio to interface with your ZENO® 3200 or WEATHERPAK®. If you have more than one measurement system, INTERCEPT™ keeps track of all the individual communications: the software has extensive error checking to ensure that messages sent and received are not compromised. The standard INTERCEPT™ manages two serial ports simultaneously, for example allowing you to communicate with several remote WEATHERPAK®s over a radio system and a local WEATHERPAK® connected over a direct line. An expanded INTERCEPT™, with a capability for up to 8 serial ports, is also available.

The data can be viewed in real-time, in English or Metric units. Wind directions can be displayed in degrees or cardinal points. You can set high or low alarm set points on all measurements - when these alarm setpoints are exceeded, you will receive both an audible and visible message. Built-In-Test (BIT) information, informing the user of any possible sensor failures, can be displayed and logged.

All data received, and notice of significant events (such as a missed poll) are archived to disk. A new file is written each day, beginning and ending at midnight. This historical data is in simple tab-delimited ASCII form, allowing it to be viewed, printed, or exported to other Windows applications. You can carry out further graphical and statistical analysis of the data however you wish. DDE links and other data exchange mechanisms let you update databases and graphical packages in real-time.

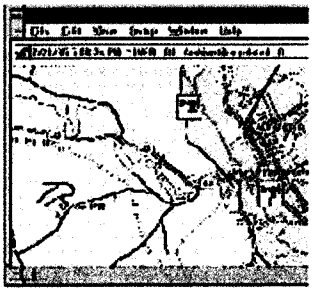

INTERCEPT™ Gra

This INTERCEPT™ is used for Road Weather Informatic (RWIS) where data is collec number of environmental mc systems with each station lo represented graphically on a

System Management
On start-up, INTERCEPT™ can poll all your instruments to download data received since the last successful connection was made. This means that no data is lost if, for example, there is a power cut during the night. Archive files are written according to the data measurement time - not the time at which the polling occurred. All alarms, and all system events (such as a missed poll), are archived to disk, and can be easily retrieved in real time. Password protection can be applied to INTERCEPT™, (ruling out the possibility of unauthorized or accidental changes to the setup.

Serial Port Expansion
The 8-port version of INTERCEPT™ allows communication to occur over up to 8 serial ports simultaneously. Since standard PCs do not support 8 serial ports, an expansion card is needed for this option.

INTERCEPT™ Network
The Network version of INTERCEPT™ lets additional PCs on a LAN access the data from one or more WEATHERPAK® or ZENO® 3200 systems in real-time. Up to 8 client copies of INTERCEPT™, running on LAN PCs, can reflect the data received by the server INTERCEPT™. (The server INTERCEPT™ need not run on the network server; however, it must have write access to it). To all intents and purposes, the client copies of INTERCEPT™ appear identical to a standard INTERCEPT™ connected directly to the measuring system.

The server INTERCEPT™ writes its archive files to a separate directory, which can be protected from access by the client copies. This means that data is protected from unauthorized or accidental deletion, while being freely available for read access by other users on the network. The Network version of INTERCEPT™ is available on NT, Windows for Workgroups, and Novell networks.

overlay. This is convenient t
when an alarm is triggered t
icon changes color and a m
on that station will reveal wh
is. A double click will reveal
information about that statio
INTERCEPT™ maintains th
features of INTERCEPT™.

INTERCEPT™ R

INTERCEPT™ RWIS is a c
version of Intercept graphic
has many other data collecti
computational demands that
specific to that application. F
information on our RWIS so
check out this version.

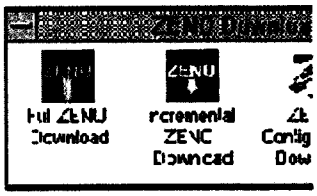

Point & Click Utilities

Want to make field data coll
programming as easy as po
click? Check out our Windo
make your life a whole lot e

Request More Information

(206) 682-6048 / (800) 488-8291
Copyright 2003 Coastal Environmental Systems, Inc. All Rights Reserved.

COASTAL ENVIRONMENTAL SYSTEMS, INC.

Soil Moisture
S1420

• Range from –10°C to +55°C •
• +/- 1.5% or +/- 0.2 dielectric accuracy •
• Rugged & versatile •

The Campbell Dielectric Probe is a versatile, rugged, self-contained sensor for the determination of the dielectric constant of a wide variety of materials. The probe applies a high frequency electric field to a sample, and through appropriate circuitry, accurately determines the dielectric constant. The dielectric constant is used to determine soil moisture.

The basic procedure for sensor installation is to make a hole with a 7/8" diameter rod to the desired sensor depth. With course or gravelly soils, it is sometimes difficult to get a snug fit between the sensor and the soil. With this situation, making an oversized hole and preparing a "grout" of the soil, for securing the sensor in place, may be necessary. (Specific instructions are included with each sensor.)

Once the sensors are installed, there is no further need for maintenance. With permanent crops, such as trees and vines, the sensors may be left in place all winter. With annual crops, where field operations are required, removal of the sensors prior to harvest is a standard practice. If the sensors are removed, simply clean them off and store in a dry place.

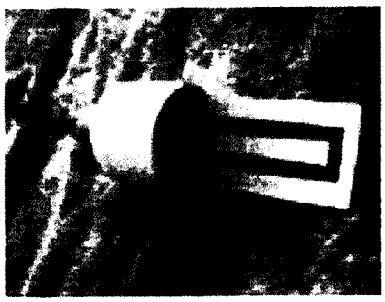

Coastal Environmental Systems, Inc. 820 1st Ave South, Seattle, WA 98134
(800) 488-8291 / (206) 682-6048 - fx: (206) 682-5658 www.CoastalEnvironmental.com

Rev 05/28/02

S1420

TECHNICAL SPECIFICATIONS

Measurement

Dielectric Constant Range:	1 to 65
Dielectric Constant Accuracy:	+/- 1.5% or +/- 0.2 (whichever is greater), typical
Soil Moisture Range:	From completely dry to fully saturated
Soil Moisture Accuracy:	In typical soils, +/- 0.02 water fraction by volume, with soil specific calibration, +/- 0.005
Temperature:	-10°C to +55°C

Environmental

Operating Temperature:	-10°C to +55°C
Storage Temperature:	-40°C to +70°C
Water Resistance:	Tolerates full immersion
Cable:	UV resistant, direct burial
Ruggedness:	Vibration and shock resistant

PHYSICAL

Size:	13 cm x 4 cm x 4 cm (approx)
Weight:	300 g (approx) (not including cable)
Sensing Volume:	Cylindrical region, 6 cm in diameter, 12 cm length (approx)

Coastal Environmental Systems, Inc. 820 1st Ave South, Seattle, WA 98134
(800) 488-8291 / (206) 682-6048 - fx: (206) 682-5658 www.CoastalEnvironmental.com

COASTAL ENVIRONMENTAL SYSTEMS, INC.

Wind Monitor 5103
S1104W • S1104Z • S1104ZR

• Easy Maintenance or Replacement •
• Extremely Rugged •
• Helicoid Propeller •
• 220 mph Survival •

Originally developed for ocean data buoy use, the wind monitor is well suited for a wide variety of wind measuring applications. Simplicity and lightweight corrosion resistant construction were principal design considerations. Slip rings and brushes have been eliminated resulting in improved reliability with lower cost. Extensive use of modern thermoplastic materials improves resistance to corrosion from the sea air environment and from atmospheric pollutants.

The wind speed sensor is an injection molded helicoid shape propeller. The propeller is four blade, 18 cm diameter x 30 cm pitch with a distance constant of 2.7 m (8.9 ft). Wind speed threshold is 1.0 m/s (2.2 mph). Propeller rotation produces an AC sine wave voltage signal with frequency directly proportional to wind speed. The AC voltage signal is induced in a centrally mounted coil by a six pole magnet mounted on the propeller shaft. The coil is located on the non-rotating central portion of the main mounting assembly, eliminating the need for slip rings and brushes.

Vane threshold is 1.0 m/s (2.2 mph) at 10 degrees. Damping ratio is 0.3. Vane position is transmitted to a precision conductive plastic potentiometer which is located in a sealed chamber just below the wind speed transducer coil. The potentiometer requires a regulated excitation voltage with a constant voltage applied to the potentiometer element, the output signal is an analog voltage directly proportional to azimuth angle. All transducer leads terminate in a junction box on the mounting post for convenience in making sensor cable connections. Five conductors are required.

Construction is principally of rigid U.V. stabilized thermoplastic with stainless steel and anodized aluminum fittings. Propeller shaft bearings and vertical shaft bearings are stainless steel precision grade ball bearings.

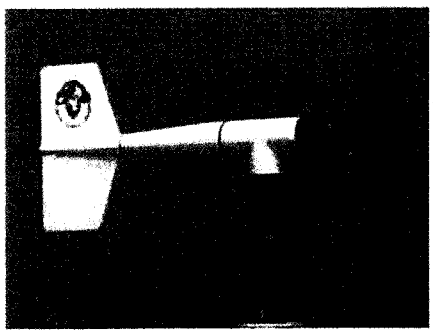

Coastal Environmental Systems, Inc. 820 1st Ave South, Seattle, WA 98134
(800) 488-8291 / (206) 682-6048 - fx: (206) 682-5658 www.CoastalEnvironmental.com

S1104W • S1104Z • S1104ZR

TECHNICAL SPECIFICATIONS

Propeller

Range:	0 to 60 m/s (117 Kts) (134 mph)
Survival:	100 m/s (194 Kts) (224 mph)
Threshold:	1.0 m/s (2.0 Kts) (2.2 mph)
	0.5 m/s (1.0 Kts) (1.0 mph) - with special bearings
Distance Constant:	2.7 m (8.9 ft)
Signal Output:	sine wave—90 Hz / 8.8 m/s
Resolution:	0.1 m/s (0.2 Kts) (0.2 mph)
Accuracy:	0.3 m/s (0.6 Kts) (0.7 mph)

Vane

Range:	360° mechanical, <355° electrical
Resolution:	1°
Accuracy:	3° (2° optional)
Survival:	100 m/s (194.3 Kts)
Threshold:	1.0 m/s (2.0 Kts)
	0.6 m/s (1.0 Kts) - with special bearings
Delay Distance:	1.3 m (4.3 ft)

PHYSICAL

Height (Overall):	37 cm (14.6 in)
Length (Overall):	55 cm (21.7 in) - includes vane and propeller
Prop Diameter:	18 cm (7.1 in)
Weight:	1.0 kg (2.2 lbs)

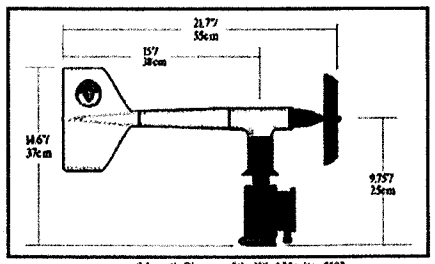

Schematic Diagram of the Wind Monitor S103

Coastal Environmental Systems, Inc. 820 1st Ave South, Seattle, WA 98134
(800) 488-8291 / (206) 682-6048 - fx: (206) 682-5658 www.CoastalEnvironmental.com

COASTAL ENVIRONMENTAL SYSTEMS, INC.

Relative Humidity and Air Temperature
S1276W • S1276Z • S1276ZR

• Very rugged •
• +/- 3% RH accuracy •
• +/- 0.3°C temperature accuracy •

The relative humidity and air temperature sensor is compact and easy to use. The relative humidity element is a hygroscopic capacitive type. It is fully interchangeable. These elements never need calibration. Instead, elements can be easily replaced without the expense and inconvenience sometimes associated with the calibration process. The membrane filter/mechanical housing of the sensor protects it from dust and dirt.

Includes YSI 44034 Thermilinear Bead for air temperature measurement.

Advantages of using a thermistor:

- Sensitivity - A thermistor is much more sensitive to temperature change than the alternative measurement components.
- Interchangeability - There are several reasons for the ability to achieve such tight interchangeability specifications:

- One is the ability to control the manufacturing process precisely.

- Another is the sensitivity of the device itself, which allows for great resolution in the measurements.

Coastal Environmental Systems, Inc. 820 1st Ave South, Seattle, WA 98134
(800) 488-8291 / (206) 682-6048 - fx: (206) 682-5658 www.CoastalEnvironmental.com

TECHNICAL SPECIFICATIONS

RH Accuracy:	+/- 3%
RH Resolution:	1% RH
RH Range:	0 - 100% RH
Operational Temperature Range:	-30°C to +60°C
Storage Temperature:	-80°C to +80°C
AT Accuracy:	+/- 0.1°C, 0°C to +70°C (+/- 0.2°C full range)
Time Constant, Max:	1 second in well-stirred oil 15 seconds in still air
Shield:	Gill multi-plate naturally ventilated shield
Typical Error In Full Sunlight:	0.5°C

Coastal Environmental Systems, Inc. 820 1st Ave South, Seattle, WA 98134
(800) 488-8291 / (206) 682-6048 - fx: (206) 682-5658 www.CoastalEnvironmental.com

COASTAL ENVIRONMENTAL SYSTEMS, INC.

Barometer 1081
S1081W • S1081Z • S1081H

• 1 hPa accuracy •

• Economical •

• High resistance to harsh environments •

The barometer 1081 is an economical, monolithic piezo-resistive pressure sensor with laser-minimal temperature compensation.

The sensor is mounted inside the WEATHERPAK® housing, or in the NEMA enclosure of the ZENO®, on a small circuit board which provides precision current excitation and signal conditioning. A pressure inlet tube extends from the sensor to a protected pressure port, which terminates under the radiation shield.

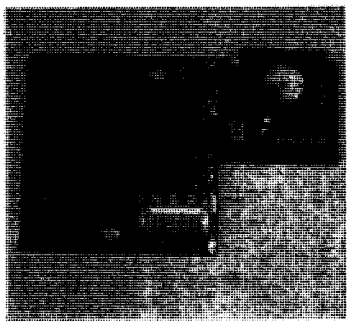

Coastal Environmental Systems, Inc. 820 1st Ave South, Seattle, WA 98134
(800) 488-8291 / (206) 682-6048 - fx: (206) 682-5658 www.CoastalEnvironmental.com

TECHNICAL SPECIFICATIONS

Measurement	
Range:	500 - 1200 hPa
Resolution:	1 hPa reported
Accuracy:	+/- 1 mBar at 22°C
	+/- 2 mBar from 0°C to +65°C
	+/- 3 mBar from -30°C to +65°C
Electrical	
Input Voltage:	+10 VDC and +5 VDC
Input Current:	3 mA (max)
Output Signal:	0 - 5 VDC after signal conditioning
Connectors:	4 pin header
Environmental	
Operating Temperature:	-40°C to +85°C
Compensated Temperature:	0°C to +50°C
PHYSICAL	
Size:	32 mm (H) x 47 mm (W) x 20 mm (D) including circuit board
Weight:	17 g (0. 6 oz)

Coastal Environmental Systems, Inc. 820 1st Ave South, Seattle, WA 98134
(800) 488-8291 / (206) 682-6048 - fx: (206) 682-5658 www.CoastalEnvironmental.com

COASTAL ENVIRONMENTAL SYSTEMS, INC.

Soil Temperature
S1282W • S1282Z

• Thermistor type •
• High accuracy •
• Good interchangeability •
• Rugged •

How the thermistor is manufactured:

Powder metal oxide mixes are precisely formulated and pressed into densely packed disks. These disks are sintered to achieve the characteristic "slope" of the thermistor. The disks are then metallized to allow for electrical contact. Calibration is accomplished by use of a patented method of material removal to achieve the final interchangeability specification. The thermistor is encapsulated with epoxy or glass to isolate it from the measurement environment. 100% of the thermistors are measured at multiple temperatures to insure that the resistance and slope are within the device's interchangeability specification. Interchangeability thermistors are manufactured under US Patents 2970411 and 3316765, and under various foreign patents.

Advantages of using a thermistor:

- Sensitivity - A thermistor is much more sensitive to temperature change than the alternative measurement components.

- Interchangeability - There are several reasons for wanting to achieve such tight interchangeability specifications:

- One is the ability to control the manufacturing process precisely.

- Another is the sensitivity of the device itself, which allows for great resolution in the measurements.

Coastal Environmental Systems, Inc. 820 1st Ave South, Seattle, WA 98134
(800) 488-8291 / (206) 682-6048 - fx: (206) 682-5658 www.CoastalEnvironmental.com

S1282W • S1282Z

TECHNICAL SPECIFICATIONS

Range:	-50°C to +50°C
Accuracy:	+/- 0.15°C over full range
Time Constant, Max.:	1 sec. in well-stirred oil, 15 sec. in still air
Cable:	15 ft (standard)

Coastal Environmental Systems, Inc. 820 1st Ave South, Seattle, WA 98134
(800) 488-8291 / (206) 682-6048 - fx: (206) 682-5658 www.CoastalEnvironmental.com

COASTAL ENVIRONMENTAL SYSTEMS, INC.

Pyranometer
S1114W • S1114Z

• Error less than +/- 5% •

• Global solar radiation •

• Durable photodiode •

• Designed for agricultural, meteorological, and hydrological use •

This pyranometer has been used extensively in solar energy studies for site evaluation and monitoring, passive system analysis, irrigation scheduling, and other environmental studies.

The pyranometer features a silicon photovoltaic detector, mounted in a fully cosine-corrected miniature head. The pyranometer may be hand-held or mounted at any required angle, provided that reflected radiation is not a significant portion of the total.

For clear, unobstructed daylight conditions, this pyranometer compares favorably with first class thermopile-type pyranometers, but at a lower cost. The spectral response does not cover the full range of the solar spectrum, but the error induced is less than +/- 5% under most conditions of natural daylight.

The pyranometer should not be used under vegetation or artificial lights, because it has been calibrated for the daylight spectrum.

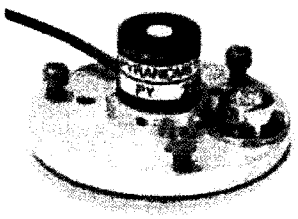

Coastal Environmental Systems, Inc. 820 1st Ave South, Seattle, WA 98134
(800) 488-8291 / (206) 682-6048 - fx: (206) 682-5658 www.CoastalEnvironmental.com

TECHNICAL SPECIFICATIONS

Range:	400 - 1100 nm
Sensitivity:	90 µA per 1000 Wm^{-2}
Accuracy:	Under natural daylight conditions, typical error is +/- 5%
Stability:	< +/- 2% change over a 1 year period
Temperature Dependence:	+/- 0.15% per °C maximum
Impedance:	147 ohms
Linearity:	+/- 1% for 0 to 3000 Wm^{-2}
Response Time:	10 µs
Relative Humidity:	0 - 100%
Detector:	High stability silicon photovoltaic detector (blue enhanced)

PHYSICAL

Sensor Housing:	Weatherproof anodized aluminum case Acrylic diffuser Stainless steel hardware
Size:	2.38 cm (diameter) x 2.54 cm (height) (0.94 in x 1 in)
Weight:	28 g (1 oz.)
Cable:	3 m (10 ft) (standard)

Coastal Environmental Systems, Inc. 820 1st Ave South, Seattle, WA 98134
(800) 488-8291 / (206) 682-6048 - fx: (206) 682-5658 www.CoastalEnvironmental.com

COASTAL ENVIRONMENTAL SYSTEMS, INC.

Tipping Bucket/ Rain Gauge
S1068W • S1068Z

• Rugged aluminum housing •
• Completely automatic •
• 0.01" accuracy •

This sensor consists of a gold anodized aluminum collector funnel with a knife edge that diverts the water to a tipping bucket mechanism. The mechanism is so designed that one alternate tip of the bucket occurs for each 0.01 inch of rainfall. Connecting the sensor to the ZENO® 3200 data logger, or to the WEATHERPAK® will allow record keeping of accumulated rainfall.

The spent water drains out of the bottom of the housing, so the sensor requires no attention or servicing of any kind. The aluminum housing is covered with a white baked enamel surface to withstand years of exposure to the environment. This sensor is factory calibrated, and due to the nature of its operation, should not require field calibration. Occasional cleaning of debris from the filter screen may be required.

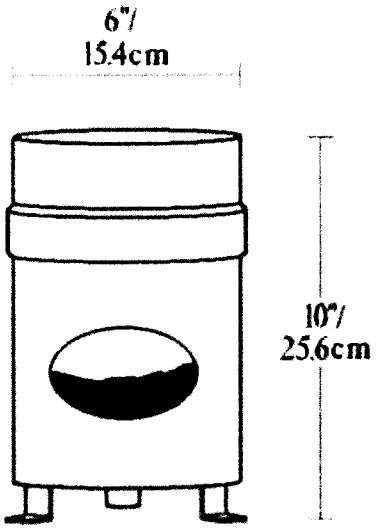

Coastal Environmental Systems, Inc. 820 1st Ave South, Seattle, WA 98134
(800) 488-8291 / (206) 682-6048 - fx: (206) 682-5658 www.CoastalEnvironmental.com

Rev 03/16/05

TECHNICAL SPECIFICATIONS

Resolution:	0.01" (0.25 mm)
Accuracy:	1.0% at 2"/hr. or less
Average Switch Closure Time:	135 ms
Maximum Bounce Settling Time:	0.75 ms
Maximum Bounce Closure Time:	0.25 ms
Maximum Switch Rating:	30 VDC @ 2 A, 115 VAC @ 1 A
Temperature Limits:	0°C to +52°C (+32°F to +125°F)
Humidity Limits:	0 to 100%

PHYSICAL

Height:	10" (25.6 cm)
Weight:	2.5 lbs (1.13 kg)
Receiving Orifice Diameter:	6" (15.4 cm)
Cable:	15 ft, 2-conductor

Vaisala Weather Transmitter WXT510

														PRICE
Weather Transmitter		**WXT510**	**A**	**A**					**0**			**0**		
Measurement parameters	**Wsd+RH+T+P+R**			**A**										$1,985
	Default setting				**A**									
Communication interface	**SDI-12 v 1.3, 1200 baud, 7,E,1**					**A**								
	RS-232, Standard ASCII auto, 19200 baud,8,N,1					**B**								
	RS-485, Standard ASCII polled, 19200 baud, 8,N,1					**C**								
	RS-422, Standard ASCII auto, 19200 baud, 8,N,1					**D**								
	RS-422 NMEA 0183 v3.0, 4800 baud, 8,N,1					**E**								
Heating	**None**						**0**							
	Heating for wind and rain measurements						*1*							$85
Connector	**No connector, bushing accessories**							**A**						
	8-pin M12 male connector and bushing accessories							*B*						$50
Cable	**No cable**								**A**					
	2 meters long 8-pin M12 cable								*B*					$55
	10 meters long 8-pin M12 cable								*C*					$95
Installation kit	**None**									**0**				
	Space holder for future option									*1*				
Supporting software	**No configuration tool**										**0**			
	Configuration tool (software and service cable)										*1*			$50
Manual	**No manual**											**A**		
	English											**B**		
Maintenance Contract	**No**												**0**	
													TOTAL	
													QTY	
													TOTAL VALUE	

Selections in bold are included in the prices of the basic versions.
Selections in italic are available at an extra price.
Shaded sections indicate typical selections.

Example of order code with typical settings:

WXT510	**A**	**A**	**B**	**0**	**A**	**A**	**0**	**0**	**B**	**0**

Accessories and Spare Parts:

Description:	**Order Code:**	**PRICE**
WXT510 PTU Module Spare Part	WXT510PTUSP	$195

VAISALA

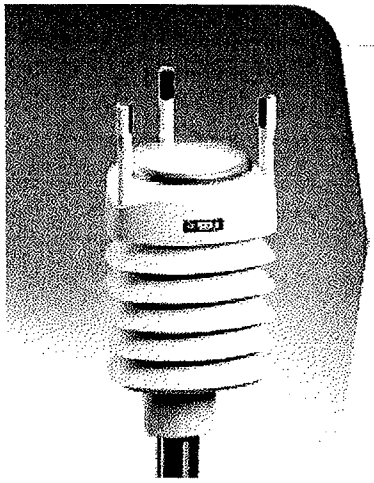

Vaisala Weather Transmitter WXT510

The WXT510 revolutionizes weather measurement: it offers a full set of sensors in one instrument, enabling you to easily set up a weather station. WXT510 measures wind speed and direction, liquid precipitation, barometric pressure, temperature and relative humidity — all a single device! WXT510 is compact, durable, simple to install and easy to integrate. As the instrument has no moving parts, it requires little to no maintenance. WXT510 provides unparalleled flexibility due to its various options, opening new possibilities for weather measurement.

The WXT510 is based on Vaisala's latest sensor technology. It combines advanced design with the decades of experience in environmental measurements.

Technical specifications

Wind speed	
Range	0...60 m/s
Accuracy	±0.3 m/s or 2%, whichever is greater
Wind direction	
Range	0...360°
Accuracy	±2°
Liquid precipitation	
Rainfall	cumulative accumulation after latest automatic or manual reset
Accuracy	5%*
Rain duration	counting each ten second increment whenever droplet detected
Rain intensity	one minute running average in ten second steps

* Due to the nature of the phenomenon, deviations caused by spatial variations may exist in precipitation readings, especially in short time scale. The accuracy specification does not include possible wind induced error.

Barometric pressure	
Range	600...1100 hPa
Accuracy	±0.5 hPa at 0...30 °C (+32...+86 °F) ±1 hPa at -52...+60 °C (-60...+140 °F)
Air temperature	
Range	-52...+60 °C (-60...+140 °F)
Accuracy at +20 °C (+68 °F)	±0.3 °C (±0.5 °F)
Relative humidity	
Range	0...100 %RH
Accuracy	±3 %RH within 0...90 %RH ±5 %RH within 90...100 %RH

For more information, please contact:
VAISALA Oyj
Tel. +358-(0)9-894 91
weather.transmitter@vaisala.com

Related documents

- WXT510 Order Guide (File size 15 Kb)
- WXT510 brochure française (File size 426 Kb)
- WXT510en brochure (File size 214 Kb)

Copyright © Vaisala 1998-2003.
Legal notice

P.O. Box 26, FIN-00421 Helsinki, FINLAND
Tel: +358 9 894 91
Fax: +358 9 8949 2485
Email: weather.transmitter@vaisala.com
www.vaisala.com

Vaisala Weather Transmitter WXT510
The Most Essential of Weather

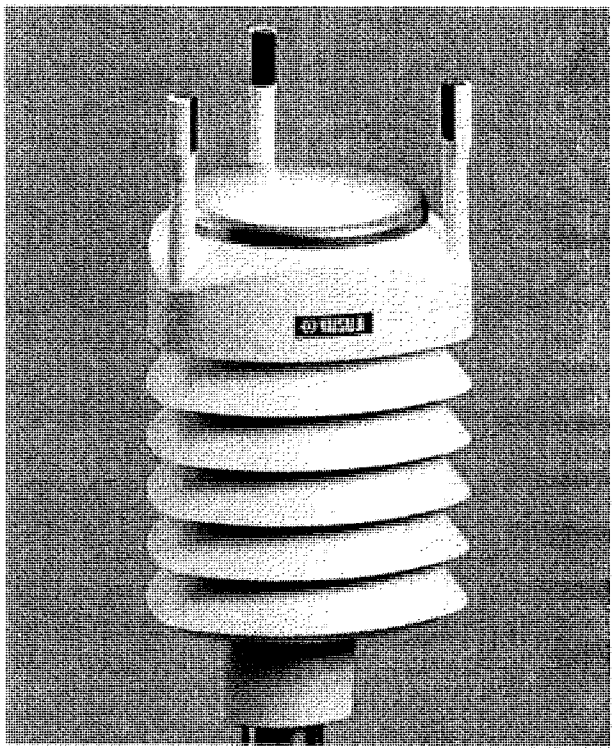

The Vaisala Weather Transmitter WXT510 makes building weather stations easier than ever. It combines decades of experience and the latest innovations on weather instruments into a compact and durable package.

Features/Benefits

- Six most essential weather parameters combined in one instrument
- Accurate and stable measurement
- Proven Vaisala sensor technology:
  - Vaisala WINDCAP® Ultrasonic Wind Sensor for wind speed and direction
  - Vaisala RAINCAP® Sensor for advanced precipitation measurement
  - Vaisala BAROCAP® Sensor for barometric pressure
  - Vaisala THERMOCAP® Sensor for temperature
  - Vaisala HUMICAP® Sensor for relative humidity
- No moving parts
- Low power consumption
- Compact and light weight
- Fast and simple to install
- Low maintenance
- WXT Configuration Tool for PC

The Vaisala Weather Transmitter WXT510 is a compact and lightweight multi-sensor instrument that measures the most essential weather parameters. It is a configurable product that can measure wind speed and direction, liquid precipitation, barometric pressure, temperature and relative humidity — all in one transmitter.

Affordable weather intelligence

The demand for accurate weather information is constantly increasing. In addition to professional meteorology, there are also numerous businesses that are weather sensitive, even though measuring the environment is not their actual core operation.

To meet the growing needs for easy-to-access weather data, the Vaisala Weather Transmitter WXT510 has been developed. It combines the modern sensor technology, advanced design and decades of experience in environmental measurements resulting a high quality instrument that reliably measures all essential weather parameters. This makes the WXT510 an optimal building block for dense weather measurement networks, and other weather stations used in multiple applications.

The WXT510 is truly flexible and it can be configured to meet most user requirements. The transmitter is easy to install with its one-bolt-mounting method. Easy and fast installation, as well as low power consumption make it ideal for use in weather stations or applications where light weight and compactness are an advantage. As the WXT510 has no moving parts, it is durable and has long maintenance intervals. The materials used are also highly resistent against UV radiation and corrosion.

Proven Vaisala technology

Accurate measurement begins with the sensors. Vaisala has decades of experience in designing and manufacturing weather sensors with field proven reliability and accuracy.

Accurate and Stable Measurement

Wind measurement

Both wind speed and direction are measured using the advanced Vaisala WINDCAP® Sensor. The sensor uses ultrasound to determine horizontal wind speed and direction. The array of three equally spaced ultrasonic transducers on a horizontal plane is an ideal, Vaisala proprietary design. The design ensures accurate wind measurement from all wind directions, without blind angles or corrupted readings.

The wind sensor has no moving parts, which makes it maintenance free. The measurement range for wind speed is from 0 to 60 m/s and for wind direction from 0 to 360°.

Precipitation measurement

The precipitation measurement is based on the Vaisala RAINCAP® Sensor, which detects the impact of individual rain drops. The signals exerting from the impacts are proportional to the volume of the drops. Hence, the signal from each drop can be converted directly to the accumulated rainfall.

Compared to traditional precipitation gauges, the Vaisala RAINCAP® Sensor gives more detailed information about precipitation. The WXT510 measures accumulated rainfall, rain intensity and duration of the rain — all in real time. Due to the measurement method, flooding, clogging as well as wetting and evaporation losses in rain measurement are eliminated.

The Vaisala RAINCAP® Sensor is the only maintenance-free precipitation sensor on the market.

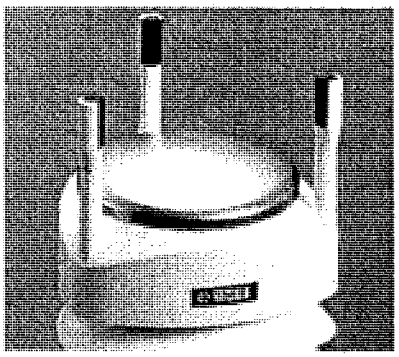

The WXT510 measures accumulated rain fall, rain intensity and duration of the rain in real time.

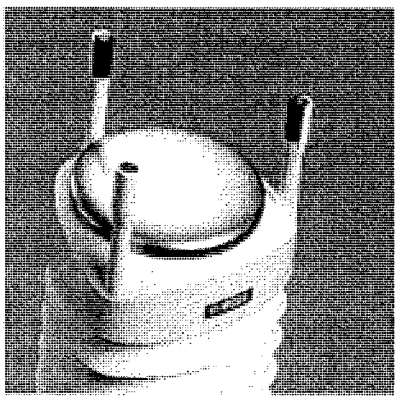

The patented ultrasonic based Vaisala WINDCAP® Sensor ensures accurate wind measurement from all wind directions.

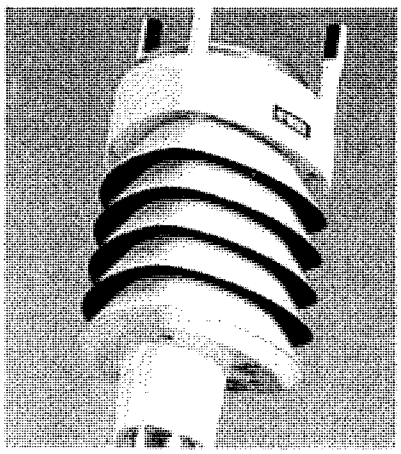

Barometric pressure, temperature and humidity sensors are combined in an advanced PTU module placed inside the specially designed radiation shield.

PTU module for barometric pressure, temperature and humidity

Barometric pressure, temperature and humidity measurements are combined in an advanced PTU module utilizing capacitive measurement method for each parameter.

Barometric pressure is measured using the silicon-based Vaisala BAROCAP® Sensor. The sensor has minimal hysteresis and excellent repeatability, as well as outstanding temperature and long-term stability. The measurement range for pressure is from 600 to 1100 hPa.

Temperature measurement is based on the ceramic Vaisala THERMOCAP® Sensor. The measurement range is from -52 to +60 °C.

Humidity measurement is based on the Vaisala HUMICAP® technology. The Vaisala HUMICAP® Sensor is highly accurate and it offers excellent long-term stability in a wide range of environments and negligible hysteresis. The measurement range for humidity is 0...100 %RH.

The whole PTU module is replaceable and available as a spare part.

The PTU module is mounted in a specially designed radiation shield. The shield protects the sensors from both scattered and direct solar radiation and precipitation. The plastic material in the plates offers excellent thermal characteristics and UV stabilized construction. The white outer surface reflects radiation, while the black inside absorbs accumulated heat.

VAISALA

P.O. Box 26, FIN-00421 Helsinki, FINLAND
Tel: +358 9 894 91
Fax: +358 9 8949 2485
Email: weather.transmitter@vaisala.com
www.vaisala.com

Simple to Install, Easy to Integrate

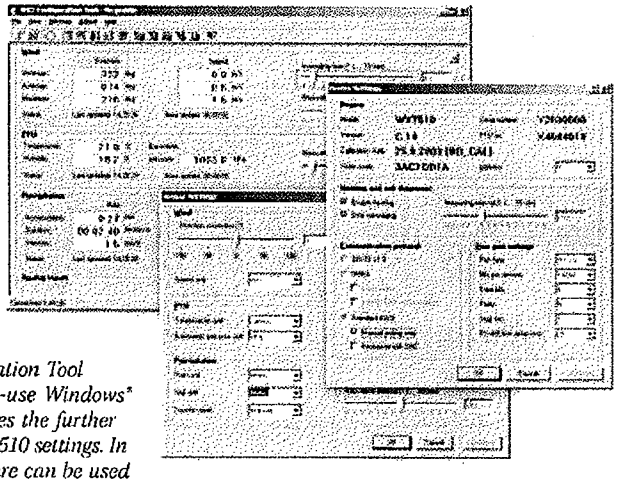

The WXT Configuration Tool includes an easy-to-use Windows® software that enables the further adjustment of WXT510 settings. In addition, the software can be used as a WXT510 user interface / display in a PC environment.

Heating to ensure constant data availability

In order to have measurement data constantly available and ensure correct measurement also during snowfall, the WXT510 offers heating for the wind and rain sensors. The heating circuit is separate from the operational power, which makes it possible to use separate supplies. The nominal input level for heating voltage is 12 V or 24 V (with automatic switch-over), either DC, AC or rectified AC. The WXT510 has an automatic control circuit that switches the heating on only at low temperatures.

Low power consumption and wide input voltage range

The Vaisala Weather Transmitter WXT510 is an excellent choice for applications where power consumption is a critical factor. During the idle mode the device typically consumes less than 0.1 mA.

The WXT510 has a wide input voltage range. Any 5... 30 VDC power supply can be used as long as it meets all applicable safety regulations.

Easy settings

The WXT510 is supplied pre-configured from the factory. If the factory settings are needed to be altered, the user friendly configuration tool, Windows® based WXT Configuration Tool, is available. Averaging times, output mode settings etc. are easy to change if required. The WXT Configuration Tool can also be used as a display for the WXT510 transmitter.

Flexible output options

The Vaisala Weather Transmitter WXT510 communicates with the host via a bi-directional serial line. It offers a choice of four configurable serial interfaces: SDI-12, RS-232, RS-485 and RS-422.

The screw terminals inside the bottom part of the transmitter are easy to access. For extra convenience an industry standard 8-pin M12 connector at the bottom of the transmitter is available as an option.

Easy installation

The Vaisala Weather Transmitter WXT510 has been designed considering easy installation. After assembling the calibrated PTU module, the WXT510 only needs to be mounted, aligned, and connected to the data logger and the power source.

The WXT510 can be mounted either on top of a pole mast or on to a cross arm. In both cases the mounting procedure is very simple. For facilitating the installation to the pole mast and eliminating the risk of misalignment during the use an optional mounting kit is available. With the mounting kit the north alignment needs to be performed only once.

Negligible maintenance need

The Vaisala Weather Transmitter WXT510 is calibrated at the factory and requires very little maintenance. The only maintenance actions are cleaning the transmitter when necessary and replacing the PTU module. Both rain and wind measurements are practically calibration free. The PTU unit has a recommended calibration interval of two years.

Technical Data

Wind

Wind speed	
Range	0...60 m/s
Response time	0.25 s
Available variables	average, maximum and minimum
Accuracy	± 0.3 m/s or ±2% whichever is greater
Output resolution	0.1 m/s (km/h, mph, knots)
Units available	m/s, km/h, mph, knots
Wind direction	
Azimuth	0...360°
Response time	250 ms
Available variables	Average, maximum and minimum
Accuracy	± 2°
Output resolution	1°
Measurement frame	
Averaging time	1...600 s (= 10 min), at one second steps on the basis of 0.25 second samples
Update interval	1...3 600 s (= 60 min), at one second steps

Liquid Precipitation

Rainfall	cumulative accumulation after latest automatic or manual reset
Collecting area	60 cm²
Output resolution	0.01 mm (0.001 in)
Accuracy	5% *
Units available	mm, in
Rain duration	counting each ten second increment whenever droplet detected
Output resolution	10 s
Rain intensity	one minute running average in ten second steps
Range	0...200 mm/h (broader range with reduced accuracy)
Output resolution	0.1 mm/h (0.01 in/h)
Units available	mm/h, in/h
Hail	cumulative amount of hits against collecting surface
Output resolution	0.1 hits/cm² (1 hits/in²)
Units available	hits/cm², hits/in², hits
Hail duration	counting each ten second increment whenever hailstone detected
Output resolution	10 s
Hail intensity	one minute running average in ten second steps
Output resolution	0.1 hits/cm²h (1 hits/in²h)
Units available	hits/cm²h, hits/in²h, hits/h

* Due to the nature of the phenomenon, deviations caused by spatial variations may exist in precipitation readings, especially in short time scale. The accuracy specification does not include possible wind induced error.

PTU module = Barometric Pressure, Air Temperature and Relative Humidity

Barometric Pressure

Range	600...1 100 hPa
Accuracy	±0.5 hPa at 0...+30 °C (+32...+86 °F)
	±1 hPa at -52...+60 °C (-60...+140 °F)
Output resolution	0.1 hPa, 10 Pa, 0.0001 bar, 0.1 mmHg, 0.01 inHg
Units available	hPa, Pa, bar, mmHg, inHg

Air Temperature

Range	-52 ... +60 °C (-60...+140 °F)
Accuracy (for sensor element) at +20 °C (+68 °F)	±0.3 °C (±0.5 °F)
Accuracy over temperature range (see graph)	

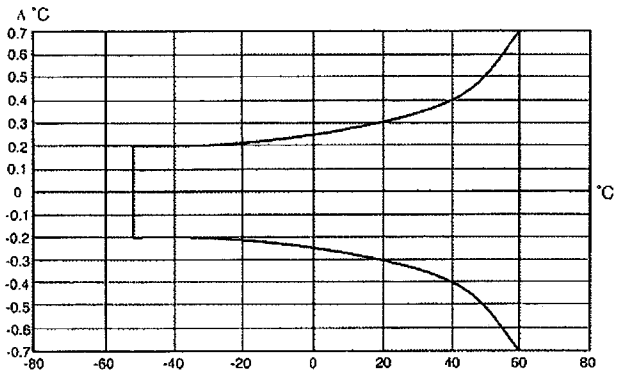

Output resolution	0.1 °C (0.1 °F)
Units available	°C, °F

Relative Humidity

Range	0...100 %RH
Accuracy	±3 %RH within 0...90 %RH
	±5 %RH within 90...100 %RH
Output resolution	0.1 %RH

PTU Update Interval

Update interval	3...3 600 s (= 60 min), at one second steps

P.O. Box 26, FIN-00421 Helsinki, FINLAND
Tel: +358 9 894 91
Fax: +358 9 8949 2485
Email: weather.transmitter@vaisala.com
www.vaisala.com

Technical Data, Dimensions

General

Self-diagnostic	separate supervision message, unit/status fields to validate measurement quality
Start-up	automatic, < 10 seconds from power on to the first valid output
Communication protocols	SDI-12 v1.3, ASCII automatic & polled, NMEA-0183 v3.0 with query option
Port H/W	SDI-12, RS-232, RS-485, RS-422
Baud rate	1 200, 2 400...115 200
Operating temperature	-52...+60 °C (-60...+140 °F)
Storage temperature	-60...+70 °C (-76...+158 °F)
Operating humidity	0...100 %RH
Dimensions	
Height	240 mm (9.4 in)
Diameter	120 mm (4.7 in)
Weight	650 g (1.43 lbs)

Power Supply

Input Voltage	5...30 VDC
Power consumption on average	
minimum	0.07 mA @ 12 VDC (in SDI-12 mode)
maximum	13 mA @ 30 VDC (with continuous measurement of all parameters)
typical	3 mA @ 12 VDC (with default measuring intervals)
Heating voltage	options: DC, AC, full wave rectified AC
recommended ranges	12 VDC ±20%, 1.1 A max.
	24 VDC ±20%, 0.6 A max.
	68 V_{pp} ±20% (AC), 0.6 A_{rms} max.
	34 V_p ±20% (f/w rect. AC), 0.6 A_{rms} max.
absolute max	30 VDC
	84 V_{pp} (AC)
	42 V_p (f/w rect. AC)

Electromagnetic compatibility

Complies with EMC standard: EN61326-1:1997 + Am1:1998 + Am2:2001: Generic Environment.

Dimensions

Dimensions in mm (inches).

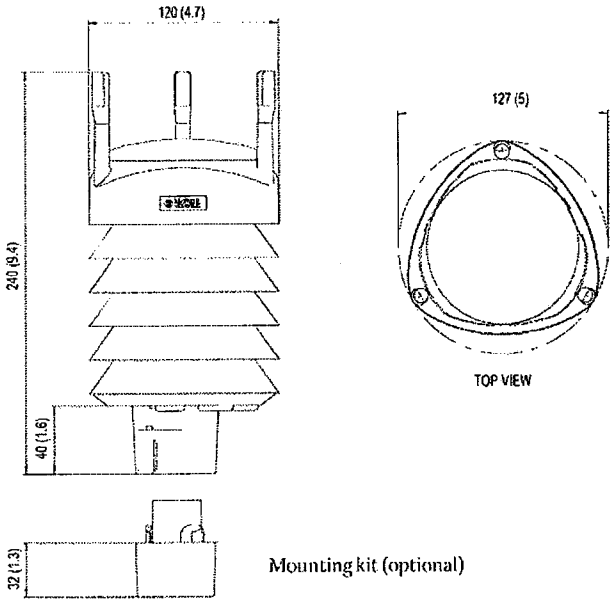

Mounting kit (optional)

BAROCAP®, HUMICAP®, RAINCAP®, THERMOCAP® and WINDCAP® are registered trademarks of Vaisala.
Specifications subject to change without prior notice.
© Vaisala Oyj

CE

Incorporates Latest Sensor Technology

Operating Principles of Wind and Rain Measurement

Vaisala WINDCAP® Sensor

The Vaisala WINDCAP® Sensor enables wind measurement with no moving or wearing parts. The measurement of wind speed and direction is based on sonic technology.

The Vaisala WINDCAP® Sensor is used in Vaisala Weather Transmitter WXT510 and Vaisala Ultrasonic Wind Sensor WS425.

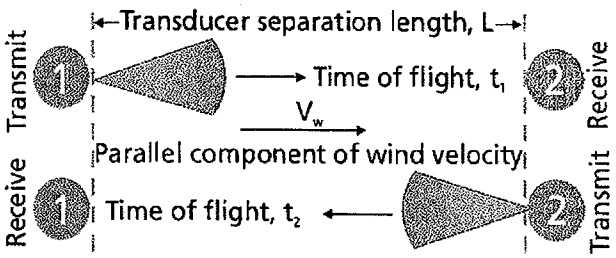

For static speed of sound V_s: $\frac{1}{t_1} = \frac{V_s + V_w}{L}$ and $\frac{1}{t_2} = \frac{V_s - V_w}{L}$

Combine to remove V_s: $V_w = \frac{L}{2}\left(\frac{1}{t_1} - \frac{1}{t_2}\right)$
Solve for V_w

Time-of-flight for a sonic impulse from the transmit transducer to the receive transducer is determined for both directions. Simple algebra allows solving for the parallel component of wind velocity independently of the static speed of sound.

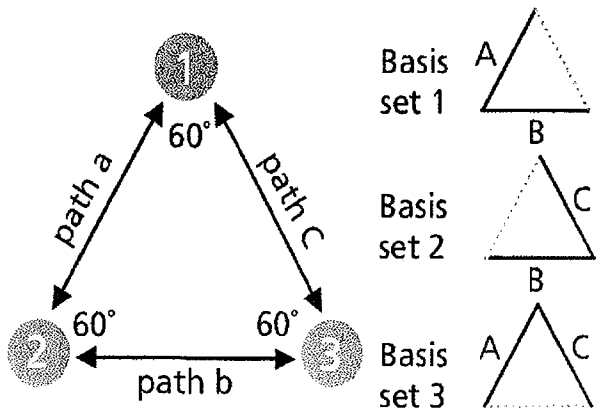

The equilateral triangle configuration of the three transducers provides three possible sets of basis vectors. The combinations yield bi-directional measurements on the paths labeled A, B and C. These measurements are used to determine the wind velocity components parallel to each of the three paths.

Vaisala RAINCAP® Sensor

The precipitation measurementy used in the Vaisala Weather Transmitter WXT510 is based on Vaisala's proprietary RAINCAP® technology. This acoustic rain measurement technology measures rainfall literally drop by drop, which means that the measurement is not affected by evaporation or wetting losses. In addition, the measurement is immune to flooding induced errors, because the sensor does not collect water.

The Vaisala RAINCAP® Sensor has no moving parts and therefore it requires practically no maintenance.

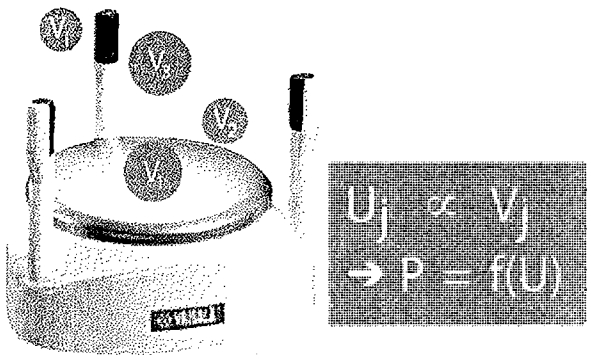

The precipitation sensor detects the impact of individual raindrops. The voltage signals U_j resulting from the impacts are proportional to the volume of the drops V_j and therefore, the signal of each drop can be directly converted to accumulated precipitation P.

weather inc.

Advanced Weather
Reporting For An
Unpredictable World

1165 National D
Sacramento, CA

Tel (916) 928-1C
Fax (916) 928-1
EMAIL sglanden
http://www.allwe

Date: 6-Jun-05

Quotation # : 111667

To: Burgess & Niple
5085 Reed Rd.
Columbus, OH 43220
Attn: Roger Denick
Fax#:
Phone#: (614) 459-2050
email: rdenick@burnip.com

Valid for 90 Days

TERMS: Per Standard All Weather Inc Terms and Conditions of Sale

TAMS QUOTATION

Part #	Qty	Description	Price	Ext. Price
9602	1	Basic Transmitter Unit with Automatic Compass (WS, WD, TEMP, RH)	$ 5,162.50	$ 5,162.50
9610	1	Metview Software, Includes TAMSTERM Software, 9611	$ 57.70	$ 57.70
96033	1	Silicon Cell Pyranometer Kit includes: 3120 Silicon Cell Pyranometer (Global Radiation)	$ 980.00	$ 980.00
6011-A	1	Rainfall Sensor	$ 1,418.00	$ 1,418.00
4501	1	Soil / Water Temperature Probe: 3 element thermister	$ 153.00	$ 153.00
9605	1	Transmitter Case UHF Radio Kit includes: UHF Radio, Power Regulator, Radio Modem, Stub Antenna	$ 2,667.50	$ 2,667.50
9606	1	Receiver Case UHF Radio Kit includes: UHF Radio, Power Regulator, Radio Modem, Stub Antenna	$ 2,752.50	$ 2,752.50
96003	1	Weather Proof Transmitter Case	$ 1,510.00	$ 1,510.00
96004	1	Weather Proof Receiver Case	$ 1,090.00	$ 1,090.00
96006	1	Boom Adaptor, Antenna , optional sensors	$ 52.50	$ 52.50
96005	1	10 foot self guying tripod	$ 855.00	$ 855.00
96011	1	220V Power Adaptor, 1200ma	$ 130.00	$ 130.00
96037	1	18 watt Solar Panel	$ 812.50	$ 812.50
96019	1	15 ft Cable Sensor Package to Case	$ 190.00	$ 190.00
96024	1	50 ft Cable, RS232 Computer to Handheld Display	$ 135.00	$ 135.00
96026	1	Cable, Auxiliary Sensor Adaptor	$ 325.00	$ 325.00
96031	1	220V RS485 to RS232 Convertor Kit	$ 480.00	$ 480.00
		Total TAMS System Price:		$ 18,771.20

NOTES: Civil Works, shipping charges and applicable taxes are the buyer's

SPECIFICATIONS

General

Input Power:
- **Voltage:** 11-16VDC
- **Current:** 50mA typical (no radio)

Serial Output:
- RS-485
  - **baud rate:** 4800
  - **max. distance:** 4,000'
- RS-232
  - **baud rate:** 4800
  - **max. distance:** 100'

Environmental Parameters

	Low	*High*
Operating Ambient Conditions		
System (except displays)		
Temperature	-40°F (-40°C)	130°F (55°C)
Humidity	0%	98% condensing
Wind		100 mph
Displays		
Temperature	0°F (-18°C)	122°F (50°C)
Humidity	0%	98% non-condensing
Storage Ambient Conditions		
System (except displays)		
Temperature	-55°F (-48°C)	135°F (57°C)
Humidity	0%	98% condensing
Displays		
Temperature	0°F (-18°C)	135°F (57°C)
Humidity	0%	98% non-condensing

Met Station

Wind Speed:
- **Range:** 2 to 55 mph
- **Accuracy:** ±1 mph or ±5% of reading (whichever is greater)
- **Resolution:** 1 mph
- **Threshold:** 2 mph

Wind Direction:
- **Range:** 0-360°
- **Accuracy:** ±5° RMSE
- **Resolution:** 10°

Temperature (subject to constraints of natural aspiration):
- **Range:** -40 to +130°F (-40 to +55°C)
- **Accuracy:** -40 to -10°F (-40 to -24°C) ±3°F/±2°C
  -9 to +110°F (-23 to +43°C) ±1°F/±1°C
  +110 to +130°F (+43 to +55°C) ±3°F/±2°C
- **Resolution:** 1°F/1°C

Humidity (subject to constraints of natural aspiration):
- **Range:** 0-100% RH
- **Accuracy:** ±3% from -40 to +130°F (-40 to +55°C)
- **Resolution:** 1%

Barometric Pressure (subject to constraints of measurement at high wind speeds):
- **Range:** 18 to 32 in. Hg (610 to 1084 mb)
- **Accuracy:**
  - -4 to +149°F (-20 to +65°C) case temp.:
    - ±0.03 in. Hg (±1 mb) typ.
    - ±0.075 in. Hg (±2.5 mb) max.
  - -40 to -4°F (-40 to -20°C) case temp.:
    - ±0.125 in. Hg (±4.2 mb) max.
- **Resolution:** 0.01 in. Hg/0.1 mb

Size: 8.5"L x 6.75"H x 2.0"D (216mm x 171mm x 51mm)
Weight: 2 lbs. (0.9 kg) maximum

Tripod
Tubing Material: aluminum
Height (fully extended): 10'

Compass
Range: 0-359°
Accuracy: ±3° (with compass oriented horizontally to earth within ±15°)
Resolution: 1°

Radio
Frequency: 467.75 MHz
RF Output Power: 2W
Sensitivity: 1 μV for less than 1 x 10E-6 BER

Battery
Type: Sealed dry cell lead acid
Capacity: 12V, 5 amp hours
Max. Recommended Storage Time: 24 months @25°C (decreasing with increasing temp.)

Battery Charger
Input Voltage: 12-18VDC
Charge Current: 750mA (typical)
Battery Charge Time (from full discharge): 7.5 hours
Trickle Current: 40mA (typical)

Control/Display
Power: 6 or 12 AA batteries, optional lithium batteries, or 9-15 Vdc external source
Operating Range: 24 hours continuous operation with alkaline batteries
Serial Output: RS-232 asynchronous, 1200 baud, no parity
Size: 9"L x 3.75"H x 1.7"D (229mm x 95mm x 43mm)
Weight: 2 lbs. (0.9 kg) maximum
Serial Output to Met Station: RS485

TETHERSONDE/RADIOSONDE

VAISALA

Vaisala DigiCORA Tethersonde System

The tethered approach to researching the atmospheric boundary layer

VAISALA

Vaisala Tethersonde TTS111

- **High-resolution PTU and wind measurement**
- **Precision sensors that are easy to change in the field**
- **Lightweight, easy to operate**

APPLICATIONS

- Tethered meteorological and air quality research
- Agricultural, forestry and acoustic research
- Profiler and SODAR comparisons
- Measurement of inversion height and atmospheric stability

The Vaisala Tethersonde TTS111 is an intrinsic part of the Vaisala DigiCORA Tethersonde System. Specially designed for atmospheric boundary layer measurement, it accurately measures PTU and wind speed/direction. The optional Vaisala Tethered Ozonesonde TTO111 can also be used to acquire ozone data. Up to six Tethersondes can be attached at the desired points on the tetherline beneath a blimp-shaped tethered balloon. The tethered balloon is raised to a maximum altitude of 3 km by the Vaisala Electric Winch TTW111 and then lowered.

The Tethersonde's transmitter operates in the 400 - 406 MHz meteorological band. The user can select the transmitter frequency. Pressure, temperature, and humidity (PTU) are measured by the same tried-and-true sensors used in Vaisala radiosondes. Best of all, the sensor modules are sealed, consumable components. They can be discarded after their usable lifetime and replaced with a fresh module, rather than returned to the factory for expensive re-calibration. A single 9V alkaline or lithium battery powers the Tethersondes. Optional external battery packs are available for extended flight times.

Wind speed is measured with a patented three-cup anemometer and a light-chopper tachometer. The anemometer is very sensitive and has a very low starting speed. The Tethersonde's aerodynamic wind vanes and a small digital compass are used to measure wind direction. The compass is very accurate and easy to calibrate in the field.

A typical Vaisala DigiCORA Tethersonde System will comprise:

- Vaisala Sounding Processor SPS220T
- DigiCORA III laptop (MWLAPPC) as standard
- TT12SW Windows™-based software
- RM21 antenna set (400 MHz telemetry antenna with preamplifier)
- Up to six Vaisala Tethersondes
- Vaisala Electric Winch TTW111 with tetherline
- Vaisala Tethered Balloon TTB Series
- Optional Vaisala Tethered Ozonesonde TTO111
- Optional Vaisala External Battery Pack TTP111 (6 AA batteries)

The following off-the-shelf spare parts are available:

- URR20 UHF receiver
- UPP210A receiver processor
- MWP210 main power supply
- MWI210 Ethernet card

TECHNICAL INFORMATION

TEMPERATURE
F-THERMOCAP® CAPACITIVE WIRE

Measuring range	-50 ... +60 °C
Resolution	0.1 °C
Response time **	0.2 s
Repeatability of calibration *	0.15 °C
Uncertainty in sounding ***	0.5 °C
Reproducibility in sounding ****	0.2 °C

HUMIDITY
H-HUMICAP® THIN FILM CAPACITOR

Measuring range	0 ... 100 %RH
Resolution	0.1 %RH
Response time @ +20°C **	< 0.5 s
Repeatability of calibration *	2% RH
Uncertainty in sounding ***	5% RH
Reproducibility in sounding ****	3% RH

PRESSURE
BAROCAP® SILICON SENSOR

Measuring range	500 ... 1080 hPa
Resolution	0.1 hPa
Repeatability of calibration *	0.4 hPa
Uncertainty in sounding ***	1.5 hPa
Reproducibility in sounding ****	0.5 hPa

WIND SPEED
3-CUP ANEMOMETER

Measuring range	0 ...20 m/s
Resolution	0.1 m/s

WIND DIRECTION
DIGITAL COMPASS

Measuring range	0 ...360°
Resolution	1°

ANALOG TO DIGITAL CHANNELS

Measuring range	0 ...2.000 VDC
Resolution	0.001 VDC

OZONE CHANNELS

Current measuring range	0 ...10.000 µA
Current resolution	0.003 µA
Temperature measuring range	0 ... +40 °C
Temperature resolution	0.1 °C

TRANSMITTER

Modulation	GFSK
Frequency	400...406 MHz
Adjustable frequency steps	10 kHz
Bandwidth	< 20 kHz
Power	+12 dBm (nominal) or 16 mW

GENERAL

Dimensions	approx. 145 cm x 32 cm x 32 cm
Power source	9 V battery
Power consumption	100 mA
Weight incl. sensors and internal battery	300 g
Operating temperature	0 ... +50 °C
Storage conditions:	RH <85%, 5 ... +40 °C

* Standard deviation of differences between two successive repeated calibrations, k = 2 confidence level

** Step response to 63.2 % @ 6m/s flow @ 1000hPa

*** 2-sigma (95,5 %) confidence level (k=2), cumulative uncertainty including repeatability, long-term stability, effects due to measuring conditions, dynamic effects (such as response time) and effects due to measurement electronics

**** standard deviation of differences, in twin soundings divided by 2

Vaisala reserves the right to change the specifications without prior notice.

VAISALA

Your Partner in All Weather

Vaisala Oyj
Helsinki, Finland
Tel. +358 9 894 91
Fax +358 9 894 9227

Vaisala GmbH
Hamburg, Germany
Tel. +49 40 839 030
Fax +49 40 839 03 110

Vaisala Ltd
Birmingham, UK
(Traffic Weather Products only)
Tel. +44 121 683 1200
Fax +44 121 683 1299

Vaisala Ltd
Newmarket, UK
(Upper Air and SurfaceWeather Products only)
Tel. +44 1638 576 200
Fax +44 1638 576 240

Vaisala SA
Paris, France
Tel. +33 1 30 57 27 28
Fax +33 1 30 96 08 58

Vaisala SA
Meyreuil, France
(Thunderstorm Systems only)
Tel. +33 4 42 12 64 64
Fax +33 4 42 12 64 74

Vaisala Inc.
Woburn, MA, USA
Tel. +1 781 933 4500
Fax +1 781 933 8029

Vaisala Inc.
Columbus, OH, USA
(Aviation Weather Systems only)
Tel. +1 614 873 6880
Fax +1 614 873 6890

Vaisala Inc.
Boulder, CO, USA
Tel. +1 303 499 1701
Fax +1 303 499 1767

Vaisala Inc.
Tucson, AZ, USA
(Thunderstorm Systems and Data only)
Tel. +1 520 806 7300
Fax +1 520 741 2848

Vaisala Inc.
Sunnyvale, CA, USA
(Surface Weather Products only)
Tel. +1 408 734 9640
Fax +1 408 734 0655

Vaisala Inc. Regional Office
London, ON, Canada
Tel. +1 519 679 9563
Fax +1 519 679 9992

Vaisala KK
Tokyo, Japan
Tel. +81 3 3266 9611
Fax +81 3 3266 9610

Vaisala Pty Ltd
Hawthorn, Vic , Australia
Tel. +61 3 9818 4200
Fax +61 3 9818 4522

Vaisala Beijing
Representative Office
P.R.China
Tel. +86 10 6522 4041
Fax +86 10 6522 4051

Vaisala Regional Office Malaysia
Kuala Lumpur, Malaysia
Tel. +60 3 2169 7776
Fax +60 3 2169 7775

For more detailed contact information and for other Vaisala locations visit us at: www.vaisala.com

Ref. B210350EN-A

Detailed Profiles of the Atmospheric Boundary Layer

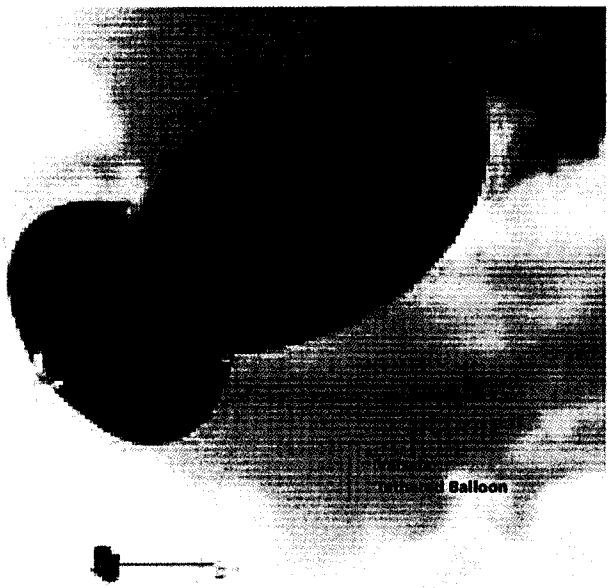

The Vaisala DigiCORA Tethersonde System gives the research meteorologist a detailed profile of the atmospheric boundary layer by raising and lowering a single Vaisala Tethersonde.

The system can also be used as a tower to measure atmospheric conditions over time at multiple levels. In this case, the Vaisala Sounding Processor SPS220T and PC-based workstation will sequentially process signals from up to six Tethersondes attached at various heights along the tetherline.

Up to six Vaisala Tethersondes

Each Vaisala Tethersonde measures temperature, humidity, pressure, wind speed and wind direction. Optional Vaisala Tethered Ozonesondes are also available. Six additional A/D channels are provided for user-supplied sensors with the appropriate outputs.

The Vaisala DigiCORA Tethersonde System is easy to transport. Set-up is accomplished in a few minutes, even at remote sites.

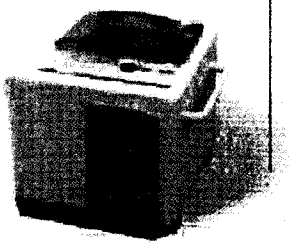

Vaisala Electric Winch with tetherline

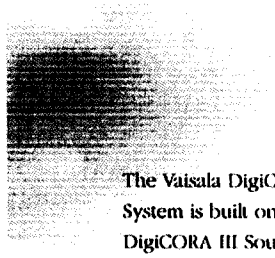

The Vaisala DigiCORA Tethersonde System is built on the Vaisala DigiCORA III Sounding System. A typical system will comprise:

- Vaisala Sounding Processor SPS220T
- Notebook PC with Windows 2000®-based application software package
- Antenna with pre-amplifier
- Vaisala Electric Winch with tetherline
- Vaisala Tethered Balloon
- Up to six Vaisala Tethersondes
- Options: Vaisala Tethered Ozonesonde and external battery packs

The Vaisala Sounding Processor SPS220T houses the receiver and data processor. It decodes the digital data received from the Tethersondes and passes it, via an Ethernet connection, to a notebook PC for analysis and archiving. Vaisala's Windows 2000®-based TT12SW software is used to control the SPS220T receiver, as well as to acquire the Tethersonde serial numbers and sensor coefficients. The TT12SW software also provides tabular and graphical presentations of the data acquired from each Tethersonde and the optional Tethered Ozonesonde. Flight files can be archived and replayed later. The Tethersondes transmit data to the SPS220 Sounding Processor in the 400 to 406 MHz meteorological band.

Applications

- Air pollution studies
- Meteorological research
- Agricultural, forestry and acoustic research
- Profiler and SODAR comparisons
- Measurement of inversion height and atmospheric stability

Optional components: Vaisala Tethered Ozonesonde and external battery packs

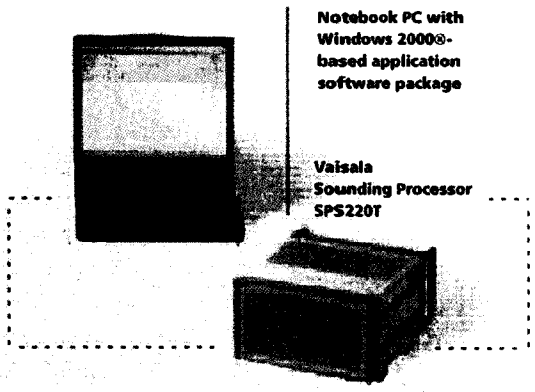

Notebook PC with Windows 2000®-based application software package

Vaisala Sounding Processor SPS220T

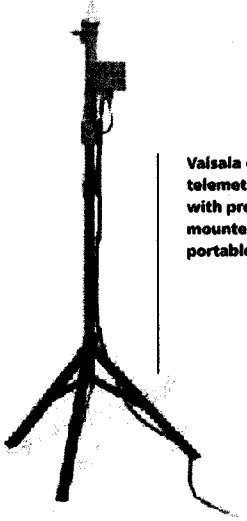

Vaisala 400 MHz telemetry antenna with pre-amplifier mounted on optional portable tripod

Vaisala Tethersonde

Up to six lightweight Vaisala Tethersondes can be deployed at the same time. Their temperature, humidity and pressure sensors are the same tried and true sensors used in the Vaisala Radiosonde RS90 and the Vaisala Rocketsonde. Attached or removed from the tetherline in seconds, they are easy to deploy in the field. Best of all, the sensor modules are sealed, consumable components that can be discarded after their usable lifetime and replaced with a fresh module, rather than returned to the factory for expensive re-calibration.

The Tethersondes are powered by a single 9V alkaline or lithium battery, and optional external battery packs are available for extended flight times.

Tethered balloons are available in a variety of sizes. Filled with helium or hydrogen, they are deployed by means of the Vaisala Electric Winch. Tetherlines of various lengths and break strengths are available.

Flexibility with DigiCORA III

Since the Vaisala DigiCORA Tethersonde System is based on the Vaisala DigiCORA III Sounding System, Vaisala GPS radiosonde and 1680 MHz Radiotheodolite operations can be undertaken with the same system. Modular upgrades consisting of software packages, Sounding Processor cards and antennas can significantly expand the system's capabilities. Conversely, the system can be provided as a modular upgrade to existing DigiCORA III Sounding Systems.

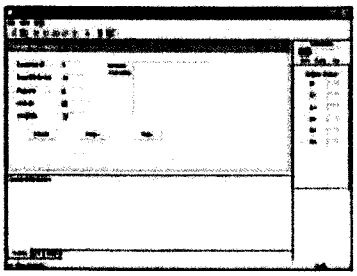

The main screen of the Vaisala DigiCORA Tethersonde System software.

Vaisala Service Contract

The Vaisala Service Contract, Level 1, is included in the price of the Vaisala DigiCORA Tethersonde System. This contract is valid for the 12 months following delivery upon signing of the Service Agreement. The Level 1 Service and Maintenance Contract includes:

- Software upgrades containing new features as they become available
- User guide upgrades as they become available

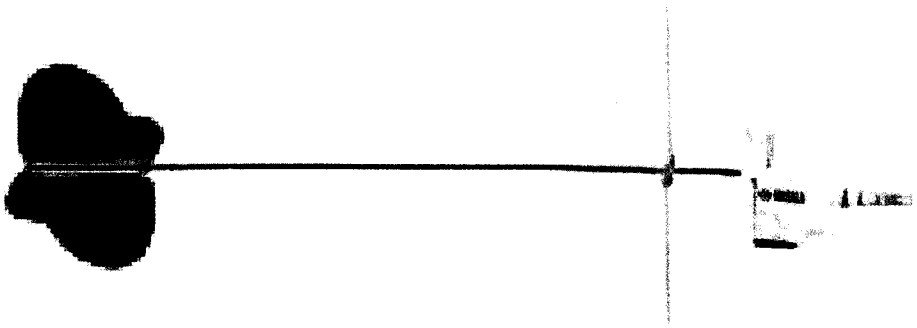

About Vaisala

Vaisala sensors, instruments and systems are used the world over by organizations that need to measure the environment with great accuracy and consistency.

The Vaisala Group is a successful international technology company that develops and manufactures electronic measurement systems and equipment for meteorology, the environmental sciences, traffic safety and industry.

Vaisala employed over 1,100 skilled professionals and achieved net sales of EUR 183.5 million in 2001. Exports accounted for 96% of net sales. Vaisala's A-series shares are listed on the Helsinki Exchanges.

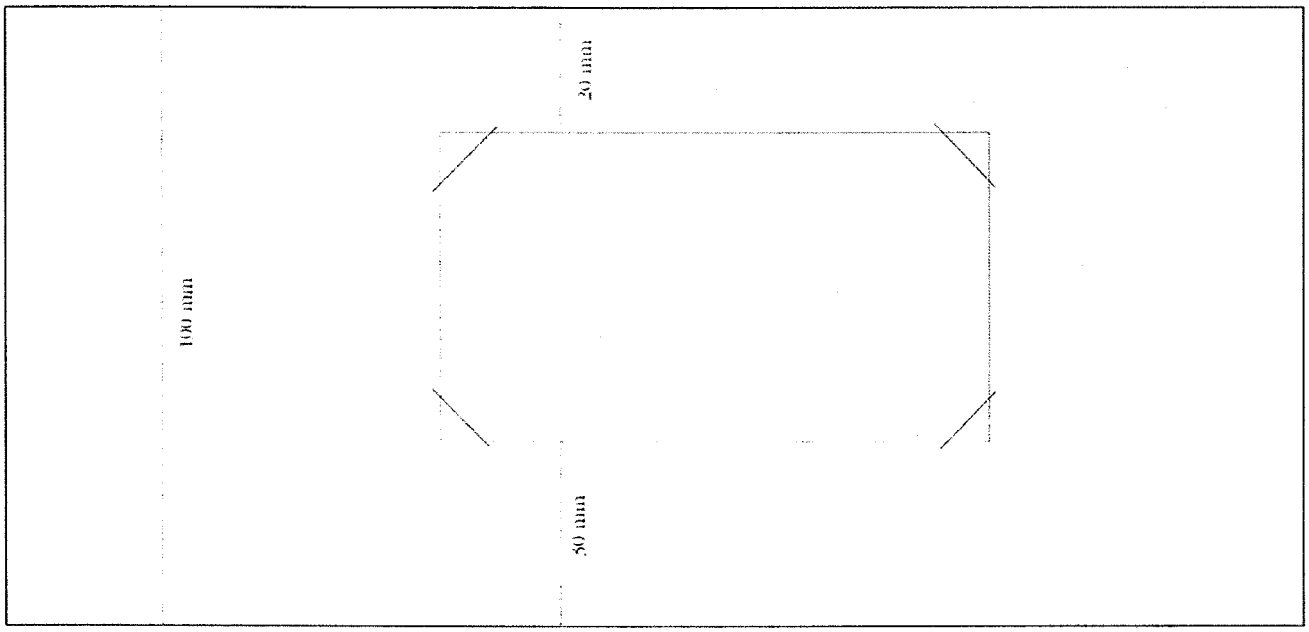

VAISALA

Vaisala Tethered Ozonesonde

- **Reliable and accurate ozone measurement**
- **High resolution and sampling rate**
- **RF interference eliminated**
- **Pump temperature monitoring**
- **Advanced software package**

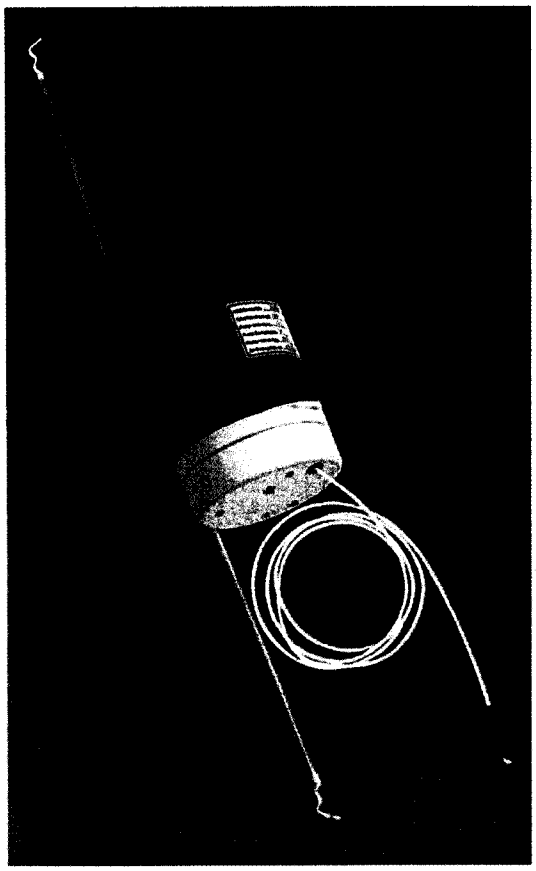

The Vaisala Tethered Ozonesonde is a re-usable instrument consisting of an ozone sensor and an ozone interface card mounted in an insulated flight container. The ozone sensor combines an electrochemical cell and a non-reactive gas sampling pump to provide efficient and consistent ozone measurement. The Tethered Ozonesonde is connected to the Vaisala DigiCORA Tethersonde System tetherline and linked by a flexible cable to a Vaisala Tethersonde. Ozone data along with temperature, pressure, humidity, wind speed/direction data are transmitted to the Vaisala DigiCORA Sounding Processor and workstation PC, which automatically process the sounding data.

ECC OZONE SENSOR

The ECC ozone sensor reliably and accurately detects ozone on the basis of an iodide redox reaction. The sensor's electrochemical cell consists of two platinum electrodes in separate anode and cathode chambers, immersed in potassium iodide solutions of different concentrations. The chambers are linked by an ion bridge. As air containing ozone flows into the cathode solution, a chemical reaction occurs resulting in a potential difference between the cathode and anode chambers. This produces a small, measurable current across the ion bridge. The electrical current generated is in proportion to the rate at which ozone enters the cell. The current is measured and ozone concentration data is relayed to the Vaisala Tethersonde, which transmits the ozone and meteorological data to the receiving equipment. The software calculates the ozone concentration, or partial pressure, taking into account the pump flow rate, air pressure and pump temperature.

OZONE INTERFACE CARD

The Vaisala Tethered Ozonesonde is supplied with an ozone interface card that converts the low-level signals from the ECC sensor to an output that is compatible with the Vaisala Tethersonde's A/D channels. The interface card is housed with the ECC in the insulated flight container.

TECHNICAL INFORMATION

OZONE SENSOR ECC

Dimensions (including weatherproof insulated flight container)	650 x 210 x 114 mm L(rod) x H x W mm
Weight	600 grams including battery
Operating temperature	0 to 40 °C
Operating pressure	Sea level to 500 hPa

The specifications of the ECC sensor are given by the manufacturer. The ECC has been used up to an altitude of 40 km and 3 hPa. The evaporation of the sensor liquids limits the measuring time to 2-3 hours. The temperature inside the flight box must be above 0 °C. For details on the accuracy of the sensor, please refer to the appropriate Vaisala User's Guide.

START-UP KIT

A start-up kit that contains all the required equipment and materials needed to test and prepare the ECC sensor is available from Vaisala.

OZONE INTERFACE

Manufactured by Vaisala
Fits into the ozone sensor's casing
RF - protected

CURRENT MEASUREMENTS

Measuring range	0 ... 10 uA
Accuracy	+/- 0.010 uA
Resolution	0.003 uA

CURRENT MEASUREMENTS

Measuring range	0 ... 40.0 C
Accuracy	+/- 0.1 C
Resolution	+/- 0.03 C

SAMPLING RATE (AVERAGE)

Ozone current	1.0 s
Temperature	1.0 s
Power consumption	5.0 mW

The ECC Ozone Sensor in combination with the Vaisala DigiCORA Tethersonde System Ozonesonde Interface has been tested according to the applicable provisions of the EU directives and has been found to be in conformance with them.

VAISALA

Your Partner in All Weather

Vaisala Oyj
Helsinki, Finland
Tel. +358 9 894 91
Fax +358 9 894 9227

Vaisala GmbH
Hamburg, Germany
Tel. +49 40 839 030
Fax +49 40 839 03 110

Vaisala Ltd
Birmingham, UK
(Traffic Weather Products only)
Tel. +44 121 683 1200
Fax +44 121 683 1299

Vaisala Ltd
Newmarket, UK
(Upper Air and SurfaceWeather Products only)
Tel. +44 1638 576 200
Fax +44 1638 576 240

Vaisala SA
Paris, France
Tel. +33 1 30 57 2728
Fax +33 1 30 96 0858

Vaisala SA
Meyreuil, France
(Thunderstorm Systems only)
Tel. +33 4 42 12 6464
Fax +33 4 42 12 6474

Vaisala Inc.
Woburn, MA, USA
Tel. +1 781 933 4500
Fax +1 781 933 8029

Vaisala Inc.
Columbus, OH, USA
(Aviation Weather Systems only)
Tel. +1 614 873 6880
Fax +1 614 873 6890

Vaisala Inc.
Boulder, CO, USA
Tel. +1 303 499 1701
Fax +1 303 499 1767

Vaisala Inc.
Tucson, AZ, USA
(Thunderstorm Systems and Data only)
Tel. +1 520 806 7300
Fax +1 520 741 2848

Vaisala Inc.
Sunnyvale, CA, USA
(Surface Weather Products only)
Tel. +1 408 734 9640
Fax +1 408 734 0655

Vaisala Inc. Regional Office
London, ON, Canada
Tel. +1 519 679 9563
Fax +1 519 679 9992

Vaisala KK
Tokyo, Japan
Tel. +81 3 3266 9611
Fax +81 3 3266 9610

Vaisala Pty Ltd
Hawthorn, Vic., Australia
Tel. +61 3 9818 4200
Fax +61 3 9818 4522

Vaisala Beijing
Representative Office
P.R.China
Tel. +86 10 65224041
Fax +86 10 65224051

Vaisala Regional Office Malaysia
Kuala Lumpur, Malaysia
Tel. +60 3 2169 7776
Fax +60 3 2169 7775

For more detailed contact information and for other Vaisala locations visit us at: www.vaisala.com

Ref. B210349EN-A

VAISALA

Vaisala Sounding Processor SPS220T

- **The data receiver and processor of the Vaisala DigiCORA Tethersonde System**
- **Receives pressure, temperature, humidity, wind speed/direction data from the tethersondes, pre-processes it and sends it to the PC workstation**
- **Optional radiosonde data reception**

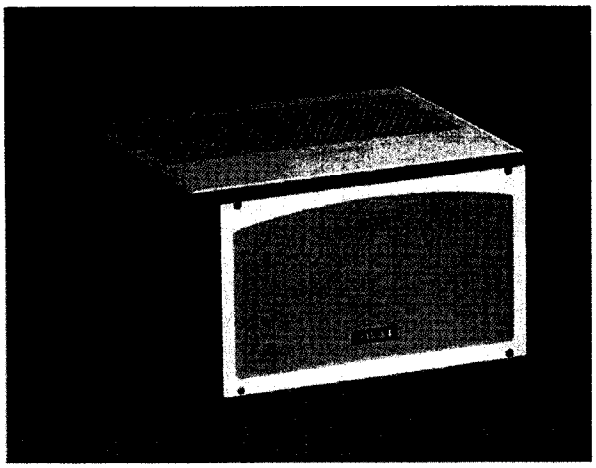

APPLICATIONS

- Tethered meteorological and air quality research
- Agricultural, forestry and acoustic research
- Profiler and SODAR comparisons
- Measurement of inversion height and atmospheric stability

The Vaisala Sounding Processor SPS220T is the data receiver and processor in the Vaisala DigiCORA Tethersonde System. Vaisala Tethersondes transmit signals to the SPS220T, which receives them, pre-processes them, and outputs the decoded PTU, wind speed and wind direction data directly to a workstation PC. This data is is of great value to meteorologists researching a wide variety of weather phenomena.

Vaisala Tethersondes measure barometric pressure, temperature, relative humidity, wind speed and wind direction, and transmit signals in the 400-406 MHz meteorological band. The signals consist of sensor readings and sensor-specific calibration coefficients. The SPS220T decodes the GFSK modulated and encrypted data, and outputs it in ASCII format without meteorological corrections or adjustments. The SPS220T also checks for errors in the transmission frames. It does not output data frames in which errors are detected.

The SPS220T receiver frequency is controlled by the Vaisala DigiCORA Tethersonde System workstation and Windows® software.

A typical Vaisala DigiCORA Tethersonde System will comprise:

- Vaisala Sounding Processor SPS220T
- Laptop PC
- Windows®-based DigiCORA Tethersonde software
- 400 MHz telemetry antenna with preamplifier
- Up to six Vaisala Tethersondes
- Vaisala Electric Winch TTW111 with tetherline
- Vaisala Tethered Balloon TTB Series
- Optional Vaisala Tethered Ozonesonde TTO111

The following off-the-shelf spare parts are available:

- URR20 UHF receiver
- UPP210A receiver processor
- MWP210 main power supply
- MWI210 Ethernet card

TECHNICAL INFORMATION

GENERAL

Dimensions	235 x 285 x 150 mm
Desktop casing	
Power consumption	25 W
Mains voltage	90 ... 132 V or 175 ... 246 V
Mains frequency	47 ... 63 Hz
Weight	3.5 kg
Humidity	Non-condensing
Operating temperature	5° C ... 45° C
Storage temperature	-55° C ... 70° C

RECEIVER

Reception	FM / GFSK
Frequency	400.15 ... 406 MHz
IF bandwidth (6 dB)	20 kHz or 300 kHz
Input impedance	50 Ohm
Antenna connector	Lemo EPS.00.240.NTN
Pre-amplifier powered through antenna	
Connector	12 V, 60mA

VAISALA

Your Partner in All Weather

Vaisala Oyj
Helsinki, Finland
Tel. +358 9 89491
Fax +358 9 8949227

Vaisala GmbH
Hamburg, Germany
Tel. +49 40 839 030
Fax +49 40 839 03 110

Vaisala Ltd
Birmingham, UK
(Traffic Weather Products only)
Tel. +44 121 683 1200
Fax +44 121 683 1299

Vaisala Ltd
Newmarket, UK
(Upper Air and SurfaceWeather Products only)
Tel. +44 1638 576 200
Fax +44 1638 576 240

Vaisala SA
Paris, France
Tel. +33 1 30 57 2728
Fax +33 1 30 96 0858

Vaisala SA
Meyreuil, France
(Thunderstorm Systems only)
Tel. +33 4 42 12 6464
Fax +33 4 42 12 6474

Vaisala Inc.
Woburn, MA, USA
Tel. +1 781 933 4500
Fax +1 781 933 8029

Vaisala Inc.
Columbus, OH, USA
(Aviation Weather Systems only)
Tel. +1 614 873 6880
Fax +1 614 873 6890

Vaisala Inc.
Boulder, CO, USA
Tel. +1 303 499 1701
Fax +1 303 499 1767

Vaisala Inc.
Tucson, AZ, USA
(Thunderstorm Systems and Data only)
Tel. +1 520 806 7300
Fax +1 520 741 2848

Vaisala Inc.
Sunnyvale, CA, USA
(Surface Weather Products only)
Tel. +1 408 734 9640
Fax +1 408 734 0655

Vaisala Inc. Regional Office
London, ON, Canada
Tel. +1 519 679 9563
Fax +1 519 679 9992

Vaisala KK
Tokyo, Japan
Tel. +81 3 3266 9611
Fax +81 3 3266 9610

Vaisala Pty Ltd
Hawthorn, Vic., Australia
Tel. +61 3 9818 4200
Fax +61 3 9818 4522

Vaisala Beijing
Representative Office
P.R.China
Tel. +86 10 65224041
Fax +86 10 65224051

Vaisala Regional Office Malaysia
Kuala Lumpur, Malaysia
Tel. +60 3 2169 7776
Fax +60 3 2169 7775

For more detailed contact information and for other Vaisala locations visit us at: www.vaisala.com

Ref. B210347EN-A

VAISALA

Vaisala Electric Winch TTW111

- **Stainless steel and aluminum construction resists corrosion**
- **Variable speed**
- **Case mounted and hand-held controls for ease of use**
- **Clean, compact design for easy transport**
- **Emergency stop features for safe operation**

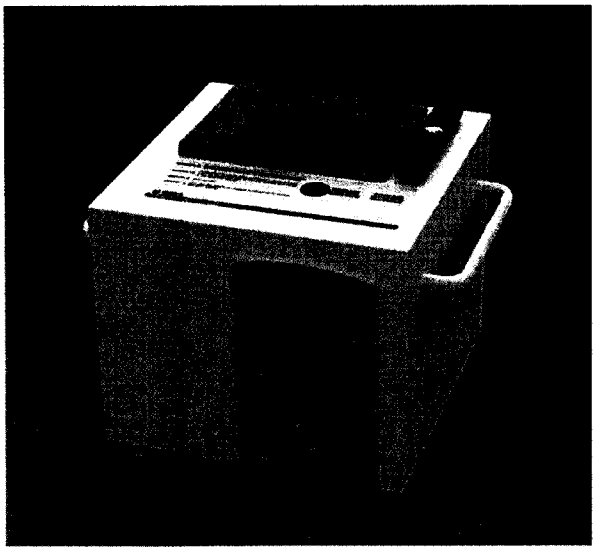

RAPID RETRIEVAL

The Vaisala Electric Winch TTW111 enables rapid retrieval of a tethered balloon or kite under heavy wind loading. Speed and winding direction can be operated with either a case mounted or hand-held controller. The high-torque drive train minimizes speed variation under changing loads.

SAFE AND EASY TO USE

Stop switches are provided on both the case-mounted and hand-held controllers. In addition, an emergency stop bar and drum cover switch halt winch operation in the event of an emergency. A level-winding mechanism distributes the tetherline evenly on the drum, assuring smooth line feed and minimizing line abrasion. Drum flange guards prevent line fouling. The electrical circuitry has built-in protection against overload and overheating. A self-braking worm gear drive assures line feed control even during loss of power. In the event of power loss, a manual crank can be used to retrieve the balloon and instrumentation. The compact design of the winch allows for ease of transportation.

RELIABLE AND RUGGED FOR THE LONG-TERM

The Vaisala Electric Winch is constructed of high-quality stainless steel and aluminum for rugged use and long-term reliability. Ceramic guides, stainless steel line guides and a ball-bearing drive train minimize wear. The winch drum and level-wind are driven by a 1 HP, high-torque industrial motor, tooth-belt drive and worm gear transmission.

TECHNICAL INFORMATION

GENERAL

Speed	Variable 0-1.8 m/s (0 - 5.8 ft/s) @ 34 kg (75 lbs) load
Maximum load	34 kg (75 lbs)
Drum capacity	15.2 cm (6 in.) diameter, 14.0 cm (5.5 in.) wide drum with 22.9 cm (9 in.) diameter flange
Drive train	1.0 HP dc motor with 20:1 worm drive
Operating temperature	0ºC (32ºF) to 50ºC (+122ºF)
Power requirements	95-240 Vac, 50/60 Hz, 10 A max.

MAXIMUM LINE LENGTHS

3 km (10,000 ft) with 110 kg (240 lbs) test line
2 km (7,000 ft) with 165 kg (360 lbs) test line

DIMENSIONS

Including handles and skids

Width	55.9 cm (22 in.)
Depth	46.5 cm (18.3 in.)
Height	47.5 cm (18.7 in.)
Weight	48.6 kg (107 lbs)

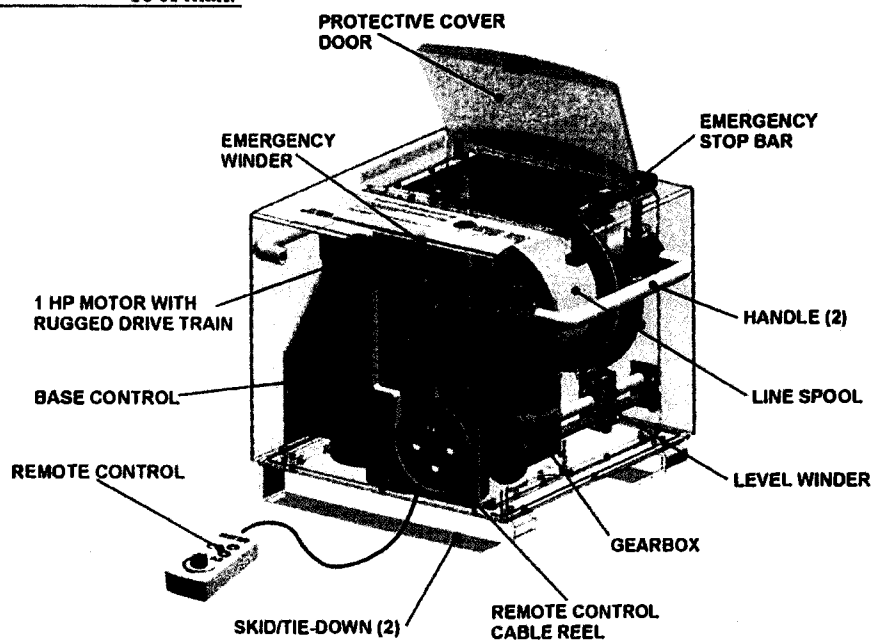

VAISALA

Your Partner in All Weather

Vaisala Oyj
Helsinki, Finland
Tel. +358 9 894 91
Fax +358 9 894 9227

Vaisala GmbH
Hamburg, Germany
Tel. +49 40 839 030
Fax +49 40 839 03 110

Vaisala Ltd
Birmingham, UK
(Traffic Weather Products only)
Tel. +44 121 683 1200
Fax +44 121 683 1299

Vaisala Ltd
Newmarket, UK
(Upper Air and SurfaceWeather Products only)
Tel. +44 1638 576 200
Fax +44 1638 576 240

Vaisala SA
Paris, France
Tel. +33 1 30 57 27 28
Fax +33 1 30 96 08 58

Vaisala SA
Meyreuil, France
(Thunderstorm Systems only)
Tel. +33 4 42 12 64 64
Fax +33 4 42 12 64 74

Vaisala Inc.
Woburn, MA, USA
Tel. +1 781 933 4500
Fax +1 781 933 8029

Vaisala Inc.
Columbus, OH, USA
(Aviation Weather Systems only)
Tel. +1 614 873 6880
Fax +1 614 873 6890

Vaisala Inc.
Boulder, CO, USA
Tel. +1 303 499 1701
Fax +1 303 499 1767

Vaisala Inc.
Tucson, AZ, USA
(Thunderstorm Systems and Data only)
Tel. +1 520 806 7300
Fax +1 520 741 2848

Vaisala Inc.
Sunnyvale, CA, USA
(Surface Weather Products only)
Tel. +1 408 734 9640
Fax +1 408 734 0655

Vaisala Inc. Regional Office
London, ON, Canada
Tel. +1 519 679 9563
Fax +1 519 679 9992

Vaisala KK
Tokyo, Japan
Tel. +81 3 3266 9611
Fax +81 3 3266 9610

Vaisala Pty Ltd
Hawthorn, Vic , Australia
Tel. +61 3 9818 4200
Fax +61 3 9818 4522

Vaisala Beijing
Representative Office
P.R.China
Tel. +86 10 65224041
Fax +86 10 65224051

Vaisala Regional Office Malaysia
Kuala Lumpur, Malaysia
Tel. +60 3 2169 7776
Fax +60 3 2169 7775

For more detailed contact information and for other Vaisala locations visit us at: www.vaisala.com

Ref. B210216en-B

VAISALA
www.vaisala.com

Head Office
Vaisala Oyj
P.O. Box 26, FIN-00121 Helsinki
Finland
Tel. +358 9 8949 91
Fax +358 9 8949 2227

Europe
Vaisala GmbH
Schnackenburgallee 41 d
D-22525 Hamburg, Germany
Tel. +49 40 839 030
Fax +49 40 839 03 110

Vaisala SA
2, rue Stéphenson (escalier 2bis)
F-78181 Saint-Quentin-en-Yvelines
Cedex, France
Tel. +33 1 3057 2728
Fax +33 1 3096 0858

Vaisala SA
(Thunderstorm Systems only)
Aix-en-Provence Office
7, Europarc Ste Victoire
F-13590 Meyreuil, France
Tel. +33 4 4212 6464
Fax +33 4 4212 6474

Vaisala Ltd
(Traffic Weather Products only)
Birmingham Operations
Vaisala House
349 Bristol Road
Birmingham B5 7SW, UK
Tel. +44 121 683 1200
Fax +44 121 683 1299

Vaisala Ltd
(Upper Air and Surface Weather
Products only)
Newmarket Office
Unit 9, Swan Lane, Exning
Newmarket, Suffolk CB8 7FN, UK
Tel. +44 1638 576 200
Fax +44 1638 576 240

North America
Vaisala Inc.
100 Commerce Way
Woburn, MA 01801-1068, USA
Tel. +1 781 933 4500
Fax +1 781 933 8029

Vaisala Inc.
(Aviation Weather Systems only)
Columbus Operations
7450 Industrial Parkway
Plain City, Ohio 43064-9005, USA
Tel. +1 614 873 6880
Fax +1 614 873 6890

Vaisala Inc.
Boulder Operations
194 South Taylor Avenue
Louisville, CO 80027, USA
Tel. +1 303 499 1701
Fax +1 303 499 1767

Vaisala Inc.
(Surface Weather Products only)
Sunnyvale Office
1288 Reamwood Ave.
Sunnyvale, CA 94089-2233, USA
Tel. +1 408 734 9640
Fax +1 408 734 0655

Vaisala Inc.
(Thunderstorm Systems
and Data only)
Tucson Operations
2705 E. Medina Road
Tucson, AZ 85706, USA
Tel. + 1 520 806 7300
Fax + 1 520 741 2848

Vaisala Inc.
Regional Office Canada
P.O. Box 2241, Station "B"
London, Ontario N6A 4E3
Canada
Tel. +1 519 679 9563
Fax +1 519 679 9992

Asia and Pacific
Vaisala KK
42 Kaguragaka 6-Chome
Shinjuku-Ku
Tokyo 162-0825, Japan
Tel. +81 3 3266 9611
Fax +81 3 3266 9610

Vaisala Oyj
Beijing Representative Office
Wangfujing Grand Hotel
Room 520
57, Wangfujing Street
Beijing 100006,
People's Republic of China
Tel. +86 10 6522 4050
Fax +86 10 6522 4051

Vaisala Oyj
Regional Office Malaysia
Level 36, Menara Citibank
165 Jalan Ampang
50450 Kuala Lumpur
Malaysia
Tel. +60 3 2169 7776
Fax +60 3 2169 7775

Vaisala Pty Ltd
3 Guest Street
Hawthorn, VIC 3122
Australia
Tel. +61 3 9818 4200
Fax +61 3 9818 4522
ABN 58 006 500 616

Please look for other
Vaisala locations at
www.vaisala.com

CE

Ref. B210368en-A

VAISALA

VaisalaTethered Balloon TTB Series

- **Part of the Vaisala DigiCORA Tethersonde System**
- **Economical and portable – in a rugged canvas carrying case**
- **High payload lift-to-volume ratio**
- **Deployable up to an altitude of 3 km**
- **Highly visible – international orange color**
- **Aerodynamically stable**
- **Optional automatic deflation device**

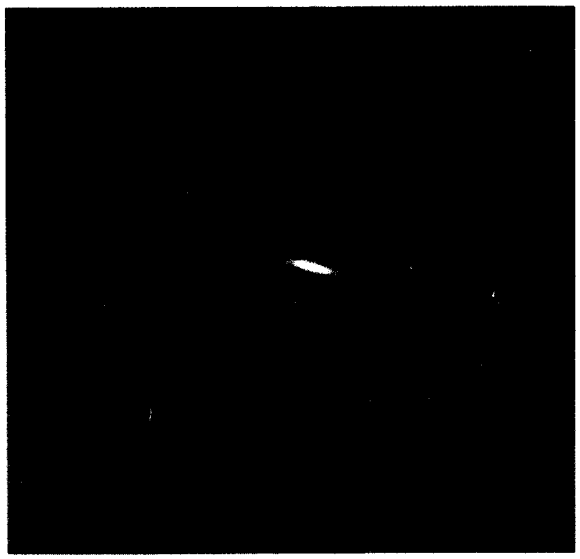

APPLICATIONS

- Air pollution sensor platform
- Radar target platform
- Boundary layer research

PROVEN RELIABILITY

The Vaisala Tethered Balloon TTB Series is used to provide lift for the Vaisala Tethersonde TTS111 and Tethered Ozonesonde TTO111. From the Arctic to the Antarctic, from the Sahara Desert to tropical rain forests, its reliability has been proven in years of field research.

AUTOMATIC PRESSURE COMPENSATION

The Tethered Balloon automatically compensates for changes in external pressure during normal ascent. It maintains its aerodynamic shape and presents a low drag coefficient at any rated altitude and wind load.The Tethered Balloon will quickly pay for itself in reduced helium or hydrogen use and the associated transportation costs of heavy cylinders.

EXCELLENT PAYLOAD-TO-VOLUME RATIO

The standard Tethered Balloon is made of 3.0 mil urethane film (optionally available in 1.5 mil film). This material has several times the shear and tear strength of standard balloon polyethylene and gives the Tethered Balloon its high lift-to-volume ratio. Its payload-to-volume ratio is about four times that attained with conventional rubberized nylon on dacron material.

EASY TO INFLATE AND DEFLATE

The Tethered Balloon is easy to handle in turbulent launch and recovery situations. The fill valve is mounted in the nose section of the balloon. This allows the operator to inflate and deflate the balloon while controlling the tether point in the prevailing wind – a decided advantage when one person is operating the system in gusty winds. The Vaisala Tethered Balloon TTB Series is aerodynamic and suitable for use in winds of up to 15 m/s.

TECHNICAL INFORMATION

MODEL PAYLOADS AND DIMENSIONS

TTB125 (1.5 mil)	
Length	3.8 m / 12.5 ft
Diameter	1.85 m / 5.75 ft
Payload (sea-level)	2.7 kg / 5.9 lbs
TTB127 (1.5 mil)	
Length	4.4 m / 14.5 ft
Diameter	2.0 m / 6.5 ft
Payload (sea-level)	4.20 kg / 9.2 lbs
TTB325 (3.0 mil)	
Length	3.8 m / 12.5 ft
Diameter	1.85 m / 5.75 ft
Payload (sea-level)	2.2 kg / 4.8 lbs
TTB327 (3.0 mil)	
Length	4.4 m / 14.5 ft
Diameter	2.0 m / 6.5 ft
Payload (sea-level)	3.6 kg / 7.9 lbs
TTB329 (3.0 mil)	
Length	5.2 m / 16.0 ft
Diameter	2.3 m / 7.5 ft
Payload (sea-level)	5.45 kg / 12.0 lbs

Payload specifications listed are at sea level. Payload capacity will diminish as launch site altitude increases. Example: payload lift capacity is approximately 17% less at 1700 meters. Selection of the appropriate Tethered Balloon is dependent on the total payload to be lifted and any regulatory restrictions in the anticipated flight zone. Payload is the combination of Tethersondes (up to six can be flown simultaneously), Ozonesondes, tetherline, and wind drag on the tetherline. To calculate an estimated payload add the following:

- 300 g / Tethersonde deployed
- 600 g / Tethered Ozonesonde deployed
- 0.63 g/m of 240# test line deployed (up to 3000 m) (Diameter of 240# is .65 mm)
- 0.95 g/m of 360# test line deployed (up to 2000 m) (Diameter of 360# test line is 1.25 mm)

Wind drag is a function of the length of line deployed, wind speed, and the condition of the tetherline (old, frayed line will cause more wind drag). We recommend that the user procure at least one size larger to compensate for this effect.

The user is responsible for determining any regulatory restrictions on tethered balloon flights. Should balloon size be restricted, Vaisala offers custom versions of the Tethered Balloon with internal tethers allowing the "stacking" of multiple balloons to achieve greater lift capability. Vaisala's TTD111 Tethered Balloon Automatic Deflation Device is also available for deflating the balloon should it break free of its mooring.

VAISALA
Reliable.

Vaisala Oyj
Helsinki, Finland
Tel. +358 9 894 91
Fax +358 9 894 92227

Vaisala GmbH
Hamburg, Germany
Tel. +49 40 839 030
Fax +49 40 839 03 110

Vaisala Ltd
Birmingham, UK
(Road Weather Products only)
Tel. +44 121 683 1200
Fax +44 121 683 1299

Vaisala Ltd
Newmarket, UK
(Upper Air and Surface Weather Products only)
Tel. +44 1638 576 200
Fax +44 1638 576 240

Vaisala SA
Paris, France
Tel. +33 1 30 57 2728
Fax +33 1 30 96 0858

Vaisala SA
Meyreuil, France
(Thunderstorm Systems only)
Tel. +33 4 42 12 6464
Fax +33 4 42 12 6474

Vaisala Inc.
Woburn, MA, USA
Tel. +1 781 933 4500
Fax +1 781 933 8029

Vaisala Inc.
Columbus, OH, USA
(Aviation Weather Systems only)
Tel. +1 614 873 6880
Fax +1 614 873 6890

Vaisala Inc.
Boulder, CO, USA
Tel. +1 303 499 1701
Fax +1 303 499 1767

Vaisala Inc.
Tucson, AZ, USA
(Thunderstorm Systems and Data only)
Tel. +1 520 806 7300
Fax +1 520 741 2848

Vaisala Inc.
Sunnyvale, CA, USA
(Surface Weather Products only)
Tel. +1 408 734 9640
Fax +1 408 734 0655

Vaisala Inc. Regional Office
London, ON, Canada
Tel. +1 519 679 9563
Fax +1 519 679 9992

Vaisala KK
Tokyo, Japan
Tel. +81 3 3266 9611
Fax +81 3 3266 9610

Vaisala Pty Ltd
Hawthorn, Vic., Australia
Tel. +61 3 9818 4200
Fax +61 3 9818 4522

Vaisala Beijing
Representative Office
P.R.China
Tel. +86 10 8526 1199
Fax +86 10 8526 1155

Vaisala Regional Office Malaysia
Kuala Lumpur, Malaysia
Tel. +60 3 2169 7776
Fax +60 3 2169 7775

For more detailed contact information and for other Vaisala locations visit us at: www.vaisala.com

All specifications subject to change without notice.

Ref. B210348EN-B

CE

TECHNICAL INFORMATION

TEMPERATURE
F-THERMOCAP® CAPACITIVE WIRE

Measuring range	-50 ... +60 °C
Resolution	0.1 °C
Response time **	0.2 s
Repeatability of calibration *	0.15 °C
Uncertainty in sounding ***	0.5 °C
Reproducibility in sounding ****	0.2 °C

HUMIDITY
H-HUMICAP® THIN FILM CAPACITOR

Measuring range	0 ... 100 %RH
Resolution	0.1 %RH
Response time @ +20°C **	< 0.5 s
Repeatability of calibration *	2% RH
Uncertainty in sounding ***	5% RH
Reproducibility in sounding ****	3% RH

PRESSURE
BAROCAP® SILICON SENSOR

Measuring range	500 ... 1080 hPa
Resolution	0.1 hPa
Repeatability of calibration *	0.4 hPa
Uncertainty in sounding ***	1.5 hPa
Reproducibility in sounding ****	0.5 hPa

WIND SPEED
3-CUP ANEMOMETER

Measuring range	0 ...20 m/s
Resolution	0.1 m/s

WIND DIRECTION
DIGITAL COMPASS

Measuring range	0 ...360°
Resolution	1°

ANALOG TO DIGITAL CHANNELS

Measuring range	0 ...2.000 VDC
Resolution	0.001 VDC

OZONE CHANNELS

Current measuring range	0 ...10.000 µA
Current resolution	0.003 µA
Temperature measuring range	0 ... +40 °C
Temperature resolution	0.1 °C

TRANSMITTER

Modulation	GFSK
Frequency	400...406 MHz
Adjustable frequency steps	10 kHz
Bandwidth	< 20 kHz
Power	+12 dBm (nominal) or 16 mW

GENERAL

Dimensions	approx. 145 cm x 32 cm x 32 cm
Power source	9 V battery
Power consumption	100 mA
Weight incl. sensors and internal battery	300 g
Operating temperature	0 ... +50 °C
Storage conditions:	RH <85%, 5 ... +40 °C

* Standard deviation of differences between two successive repeated calibrations, k = 2 confidence level

** Step response to 63.2 % @ 6m/s flow @ 1000hPa

*** 2-sigma (95,5 %) confidence level (k=2), cumulative uncertainty including repeatability, long-term stability, effects due to measuring conditions, dynamic effects (such as response time) and effects due to measurement electronics

**** standard deviation of differences, in twin soundings divided by 2

Vaisala reserves the right to change the specifications without prior notice.

VAISALA

Your Partner in All Weather

Vaisala Oyj
Helsinki, Finland
Tel. +358 9 894 91
Fax +358 9 894 9227

Vaisala GmbH
Hamburg, Germany
Tel. +49 40 839 030
Fax +49 40 839 03 110

Vaisala Ltd
Birmingham, UK
(Traffic Weather Products only)
Tel. +44 121 683 1200
Fax +44 121 683 1299

Vaisala Ltd
Newmarket, UK
(Upper Air and SurfaceWeather Products only)
Tel. +44 1638 576 200
Fax +44 1638 576 240

Vaisala SA
Paris, France
Tel. +33 1 30 57 2728
Fax +33 1 30 96 0858

Vaisala SA
Meyreuil, France
(Thunderstorm Systems only)
Tel. +33 4 42 12 6464
Fax +33 4 42 12 6474

Vaisala Inc.
Woburn, MA, USA
Tel. +1 781 933 4500
Fax +1 781 933 8029

Vaisala Inc.
Columbus, OH, USA
(Aviation Weather Systems only)
Tel. +1 614 873 6880
Fax +1 614 873 6890

Vaisala Inc.
Boulder, CO, USA
Tel. +1 303 499 1701
Fax +1 303 499 1767

Vaisala Inc.
Tucson, AZ, USA
(Thunderstorm Systems and Data only)
Tel. +1 520 806 7300
Fax +1 520 741 2848

Vaisala Inc.
Sunnyvale, CA, USA
(Surface Weather Products only)
Tel. +1 408 734 9640
Fax +1 408 734 0655

Vaisala Inc. Regional Office
London, ON, Canada
Tel. +1 519 679 9563
Fax +1 519 679 9992

Vaisala KK
Tokyo, Japan
Tel. +81 3 3266 9611
Fax +81 3 3266 9610

Vaisala Pty Ltd
Hawthorn, Vic , Australia
Tel. +61 3 9818 4200
Fax +61 3 9818 4522

Vaisala Beijing
Representative Office
P.R.China
Tel. +86 10 65224041
Fax +86 10 65224051

Vaisala Regional Office Malaysia
Kuala Lumpur, Malaysia
Tel. +60 3 2169 7776
Fax +60 3 2169 7775

For more detailed contact information and for other Vaisala locations visit us at: www.vaisala.com

Ref. B210350EN-A

Preliminary Quotation

UPPER AIR MEASUREMENT SYSTEM

A Versatile, Professional Weather Station Designed for Ease of Use and Portability.

Coastal Environmental Systems, Inc.
820 First Avenue South ♦ Seattle, Washington 98134
www.CoastalEnvironmental.com

Quotation Number: KP - 123 *Rev.Date:* June 6, 2005 *PRICES GUARANTEED FOR ONE YEAR*

PREPARED FOR:
Roger Denick
Burgess & Niple
5085 Reed Road
Columbus, OH 43220
RDenick@burnip.com

PREPARED BY:
Kelly Paletta, Products Manager
800-488-8291 x170
kpaletta@CoastalEnvironmental.com

TERMS: Net 30 (OAC)
STANDARD DELIVERY: 30 - 60 Days ARO
SHIPPING: Prepaid/Add, FOB Seattle, WA

Weather Station, Data (0001)

PART NO.	DESCRIPTION		Commercial Price	Net Price
SR2K2	Ground Station: Base Station • Receiving Station • Ground Check/Calibration Station • GPS Antenna • GPS Repeater Antenna • *LAPTOP PC and associated software* *This system reports wind speed and direction, air temperature, relative humidity and barometric pressure.*		45,720.00	**41,148.00**
M2K2	GPSonde: Radiosonde	Each, (Qty 1-500)	181.12	**172.06**
		(Qty 501-1200)	174.00	**165.29**

Portable upper-air sounding system

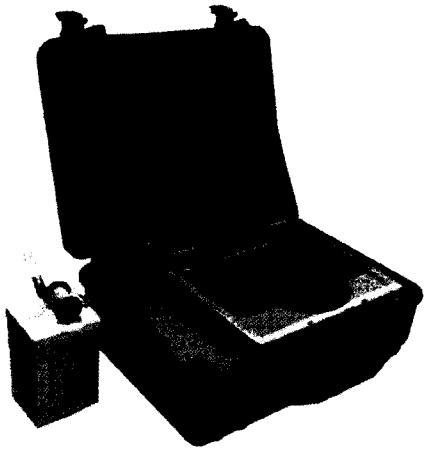

SR2K2 P

Distinctive feature of the SR2K2-P ground station consists in its integration into a small and robust suit case. The system is operated through a laptop which can be placed inside the case too, greatly facilitating transportation from one site to another.

Functionalities

Processing of raw data

Reference GPS station for differential calculation

Data archiving on hard disk or any digital support

Real time Data display
Listing and/or graphical

Sonde programming interface

GPS repeater for indoor initialization

Ground check system for T and U sensors

Editing of WMO code messages

Data transmission through Ethernet network

Laptop PC with Windows 2000 OS

Auto-tests with diagnostic display facilitating the maintenance

Omni directional antennas
easy handling and installation

Portability

Light and robust case

Dimensions 500 x 395 x 185

Weight: 9 kg

Transportation tube for 403 MHz antenna

Power supply : AC-110/220V – DC-24V

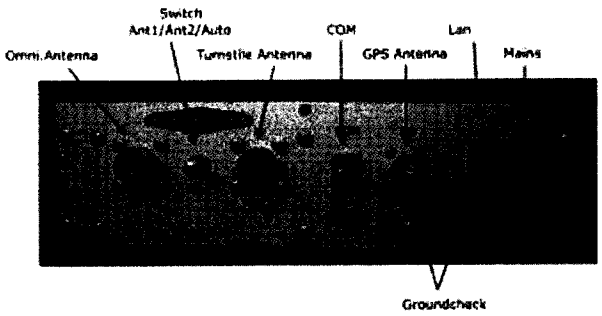

SR2K2-P – Side view – Connector panel

MODEM – Z.A de l'orme à bonnet – 91750 CHEVANNES - France
Tél : (33) **1.64.99.77.52** - **Fax** : (33) **1.64.99.77.53**
Http //www.meteomodem.com

SR2K2-P UPPER-AIR SOUNDING SYSTEM DIAGRAM

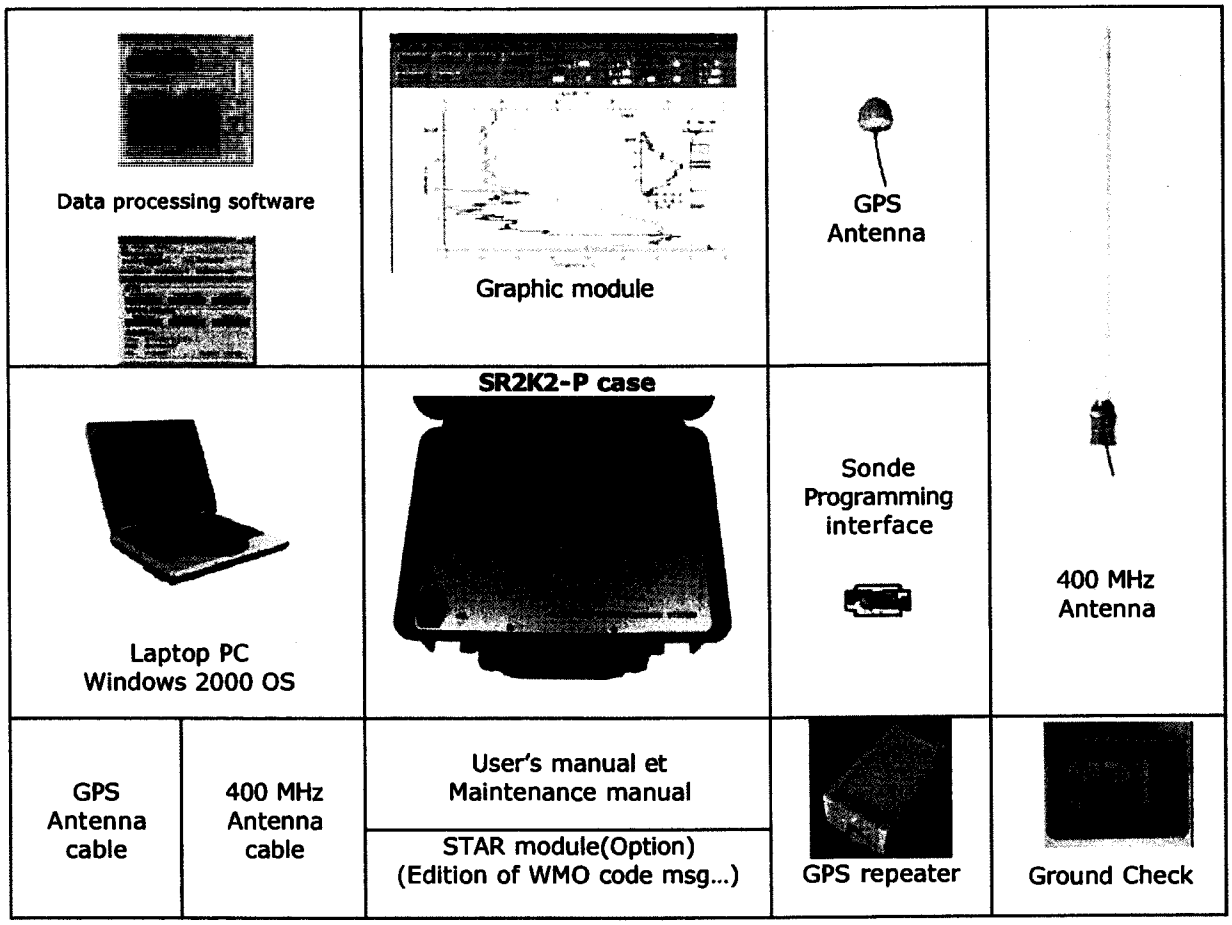

SR2K2-P TECHNICAL SPECIFICATIONS

GENERAL

Dimensions	: 500 mm – 395 mm – 185 mm
Weight	: 9 kg
Power drain	
12V-DC	: 4 W
110/220V-AC	: 10 VA
Output interfacing	: Standard USB port
Sonde prog. interface	: cable with connector
GPS receiver	: 12 channels
Workstation	: laptop PC
Compatibility	: GPSonde GL98 and M2K2

TELEMETRY

Receiver	: 400–406 MHz digital synthesizer
Range	: 250 Km
Modulation	: PSK

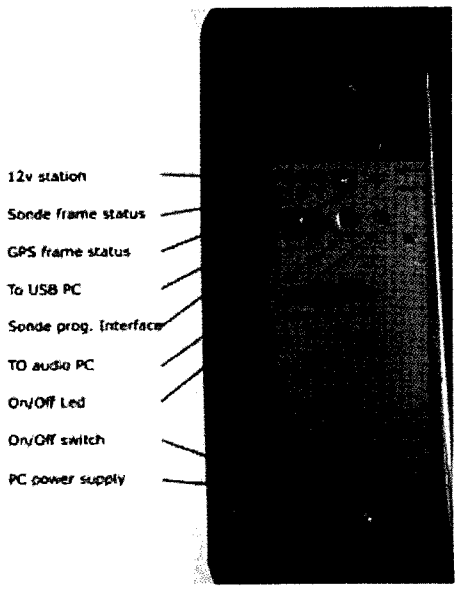

MODEM – Z.A de l'orme à bonnet – 91750 CHEVANNES - France
Tél : (33) **1.64.99.77.52** - **Fax** : (33) **1.64.99.77.53**
Http //www.meteomodem.com

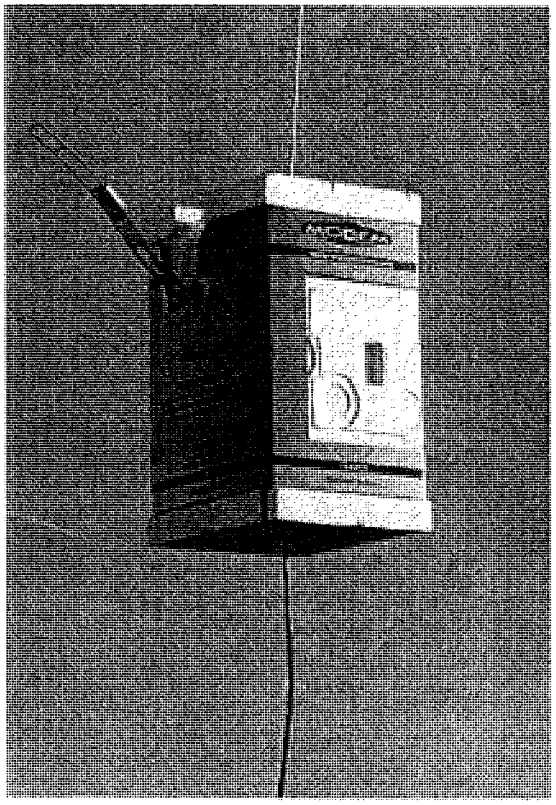

GPSonde M2K2

Issued from the former GPSonde GL98, the new M2K2 is totally compatible with all MODEM ground stations.
The new design brings the following improvements :

- Size and weight
- General Performance
- Electronic integration
- Microprocessor capability
- Additional entries for others sensors
- New generation GPS board
- Humidity and temperature accuracy
- Energy consumption
- Transmitter in full compliance with recommendations of the European ETSI EN302054 standard

Main Features

FULLY-CODED NEW GENERATION GPS
BETTER ACCURACY AND INITIALISATION TIME

PRESSURE DERIVED FROM GPS ALTITUDE WITH TEMPERATURE AND HUMIDITY PARAMETER CORRECTION
(LAPLACE LAW)

SENSORS CALIBRATION STORED ON EEPROM

GROUND CHECK FACILITY WITH BUILT-IN GPS REPEATER FOR INDOOR INITIALIZATION

400 TO 406 MHZ DIGITAL SYNTHESISER
NARROW BANDWIDTH
EN302054 STANDARD COMPLIANCE

200 KHZ STEP FREQUENCY SETTING

DIGITAL TRANSMISSION IN 1 SEC CYCLES

LOW ENERGY CONSUMPTION

BATTERIES LIFE > 3 HOURS

3-YEAR SELF LIFE

NEW HIGH PERFORMANCE
RE-PROGRAMMABLE MICROPROCESSOR

MICROPROCESSOR ALLOWS 3 MORE POSSIBILITIES TO CONNECT ADDITIONNAL SENSORS (OZONE, METHANE...)
NO NEED OF INTERFACE BOARD

BETTER TEMPERATURE ACCURACY THANKS TO NEW MICROPROCESSOR (12 BIT)

SENSOR BOOM NEW DESIGN ALLOWS A BETTER RESPONSE TIME AND DUCTILITY OF HUMIDITY SENSOR

POSSIBILITY TO BE DELIVERED WITHOUT GPS
(RADAR TRACKING)

MODEM Z.A de l'orme à bonnet 91750 CHEVANNES
Tél (33) 1.64.99.77.52 - Fax : (33) 1.64.99.77.53
Http //www meteomodem.com

SUMMARY OF TECHNICAL SPECIFICATIONS

GPSonde M2K2 RADIOSONDE:

GENERAL

Dimensions	: 92 x 107 x 160 mm
Weight	210 g (including batteries)

TEMPERATURE

Sensor type	: Thermistor
Measurement range	: +55° to –90°
Resolution	: 0.1°C
Absolute accuracy	: +/- 0.5°C
Response time	: <2s
Measurement rate	: 1 Hz
Calibration adjustment	: Calibration prior launch
Factory calibration	: Stored in EPROM

PRESSURE

Range	: 1050 to 3 hPa
Accuracy	: ±2 hPa at 1050 hPa; ±0.5 hPa at 10 hPa
Resolution	: 1 hPa at 1050 hPa; 0.1 hPa at 20hPa

WIND MEASUREMENT

General	: DGPS with C/A code altitude
Altitude Range	: Unlimited with authorisation
Position accuracy	: 10 m
Horizontal Wind accuracy	: 0.15 m/s
Wind direction accuracy	: 2 °
Position resolution	: 0.01 m
Horizontal wind resolution	: 0.01 m/s
Wind direction resolution	: 0.1 °
Measurement rate	: 1 Hz

BATTERIES

Technology	: 1.5V Alkaline
Autonomy	: >3 h
Package	: 4-battery pack

HUMIDITY

Sensor type	: Capacitor
Measurement range	: 0% to 100%
Resolution	: 1%
Absolute accuracy	: +/-5%
Response time	: <2s
Measurement rate	: 1 Hz
Calibration adjustment	: Calibration prior launch
Factory calibration	: Stored in EPROM

TRANSMITTER

Frequency range	: 400 to 406 MHz
Frequency step	: 200 KHz
Frequency setting	: Programming interface
Maximum drift	: +/- 2 KHz
Output Power	: 300 mW
Modulation type	: Digital PSK 4800 bauds

CALIBRATION

Factory calibration	: Stored on EPROM
Ground Check	: Prior launch

SR2K2 GROUND STATION

GENERAL

Dimensions	: Half 19" unit - Width: 235 mm – Depth: 310 mm – Height: 132 mm
Weight	: 3.5 kg
Consumption	: 15 W
Output	: 2 serial links (connection to PC)
Programming interface	: Front panel connector with cable
GPS	: 12-channel receiver
Workstation	: SR2K2 can be operated from a laptop or desktop computer

TELEMETRY

Built-in receiver	: 400 – 406 MHz digital Synthesiser
Tracking range	: 250 Km
Modulation	: PSK

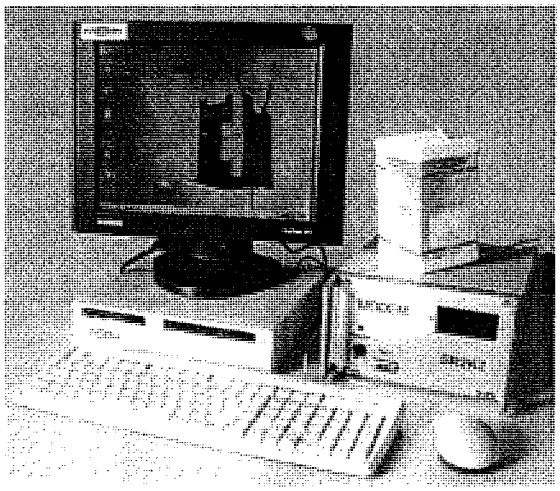

MODEM – Z A de l'orme à bonnet 91750 CHEVANNES
Tél : (33) 1.64.99.77.52 - Fax (33) 1.64.99.77.53
Http //www meteomodem com

BACKGROUND AIR POLLUTION MONITORING STATION

AIR INSTRUMENTS & MEASUREMENTS, LLC

[mailing] **PMB 391, 3579 E. Foothill Blvd, Pasadena CA 91107, USA** aimanalysis@earthlink.net
[physical] **2275 E. Foothill Blvd, Pasadena, CA, 91107, USA** http://www.aimanalysis.com

From the Desk of Harry C. Lord, Direct Tel: (626) 791-1912, Direct Fax: (626) 791-2739

QUOTATION NO: AQ 05- 5344
DATE: May 31, 2005
PREPARED FOR: Roger Denick, Burgess & Nipple
REF: Your telephone Call
APPLICATION: Ambient Air Monitoring

Thank you for the opportunity to submit this proposal.

Item	Qty	P/N	Description	Price
1	1	8506	AIM Patented & Proven Open-Path Analyzer(*), to monitor SO2, O3, NO, NO2 (summed as NOx) & SPM at ppb levels, using dispersive UV spectroscopy and DOAS signal processing With integral projection optics (double-pass), over 5 to 25m, to a reflector assembly, and back including in-line flow-through calibration cell, Laser pointer alignment device, and Protective sunshade Under control of the embedded PC	$37,500

(*) *The AIM open-path design has NOTHING in contact with the sample, eliminating the possibilities of corrosion, absorption, or other reactions from the potentially highly corrosive flue gas stream. This design is proven in over 1000 compliance monitoring installations Worldwide.*

2	1	1850	Display PC for both systems, with 4-20ma outputs, Relays for fault alarms and system controls, Display of concentration and alarms system set-up, data logging, Optional Remote (modem) communications [PC Anywhere].	$ 2,995
3.	1	1670	Wireless output to points up to 20 mi away, with high gain antenna and 115 kbps data rate	$1,495
Optional:				
4.	1	1849	Local display and keypad	$ 650
5	1	8302	AIM Patented & Proven Open-Path Analyzer(*), to monitor CO and HC at ppm levels using NDIR spectroscopy With integral projection optics (double-pass) over 5 to 15m, to a reflector assembly, and back including in-line flow-through calibration cell, Laser pointer alignment device, and Protective sunshade Under control of an embedded PC	$23,995

6	2	TriP	Tripods for field erection of the telescope and retroreflector assemblies	$1250 each
7	1		One trip, up to 5 man-days on site, installation start-up supervision, & operator training [including all expenses]	.....$6,000
			Additional days, (Plus living expenses at cost)	.....$350/day

In addition or alternately, AIM agrees to provide up to one week training at our plant at time of final system check-out, at no charge; with the trainees responsible for their own travel and living expenses.

6 1 Recommended Spare Parts for 2 & 5 Years Operation of 8500 Series:

Item	P/N	Description	Unit Price	2yr	5yr	
Consumables For each system....						
1.1	5974	UV Source	$ 795.00	2	5	per system
For up to 10 systems						
1.2	1562	D2D12 SSR	$ 240.00	2	4	
1.3	1879	D1712 DIGITAL I/O	$ 750.00	1	1	
1.4	5710	ASSY, SENSOR P.S.	810.00	1	1	
1.5	1880	COM2-PDI RS422/485, 2 CH	$ 665.00	1	1	
1.6	2243	T.E. COOLER	$1,240.00	1	1	

7 1 Recommended Spare Parts for Add-on of 8300 Series

No additional spares recommended.

Quotation firm for 60 days *For any questions regarding this quotation, please call AIM at 626-791-1912*
Terms: see below (*) *or E-mail: aimanalysis@earthlink.net*
Delivery: typ 75 days, [≤ 90 days] after receipt of L/C or order deposit
FOB/FCA: Pasadena (LA), CA *Standard warranty applies [12 mos after installation; or 18 mos after shipment]*

(*) terms (Standard) – for International Delivery [if delivery to US, consult factory for alternate terms]

Either (a) Confirmed Irrevocable Letter of Credit payable at sight, drawn on a Los Angeles bank, partial shipments allowed; or (b) 50% with Order Placement, Balance payable prior to shipment; or (c.) for an additional financing fee of 8 % of the project pricing, AIM can offer US Ex/Im Bank Financing, with FCIA insurance, with payments delayed up to 90days after shipment.

Wire-Transfer Banking Details: Air Instruments & Measurements, LLC
Account No. 100 003880; Bank Routing (ABA) No: 122237748
Bank: Western State Bank, 1801 Huntington Dr, Duarte, CA 91010
Tel: (626) 357-9611; Fax: (626) 358-9613

AIM Model 8500

AIR INSTRUMENTS & MEASUREMENTS, LLC

DUV Open-Path Gas Analyzer, for Ambient Air Monitoring

MEASURING any or all:
NO, NO_2, NH_3, $HONO$, O_3, H_2O_2, SO_2, SO_3, Cl_2, ClO_2, BTX, and others

The AIM Model 8500 open-path analyzer incorporates the most advanced technology available, and is derived from AIM's popular 5000 Series EPA compliant analyzers.

The Model 8500 employs DOAS (differential optical absorption spectroscopy), with a patented PLS pattern recognition processing of the dispersive UV spectral signature, with digital signal processing and communications. Outputs include 4-20 MA analog, Programmable digital outputs, and modem interface [optional]

The Model 8500 is available as a high resolution limited wavelength range analyzer, or low resolution broad wavelength range, or the combination of the two. The high sensitivity achieved with UV spectroscopy allows measurements typically from ppb to ppm levels, and optical pathlengths of 10's to 100's of meters.

The Model 8500 was developed from more than 30 years of practical field in-situ, open-path ansd remote sensing IR and UV experience, in over 4,000 installations in 35 countries.

FEATURES

- ***Open-Path*** - No sample contact
- ***Fast Response Time*** - Fraction of a second – allows prompt detection, analysis and adjustments/warnings.
- ***High Sensitivity*** - Accurate measurements from ppb level concentrations and higher.
- ***High Precision*** - $\leq$ 1 % of Range
- ***High Accuracy*** - $\leq$ 1% of Range
- ***Low Drift*** - $\leq$ 1% of Range over 24 hours [zero and span]
- ***EPA Compliant*** - With an in-line internal calibration cell for manual or automatic cylinder gas calibrations.
- ***Reliable Design*** -The Model 8500 Analyzer features a simple, low-maintenance, rugged design. The dispersive system with a 2048 array detector and no moving parts, and the PC based signal processing insure long-term trouble-free operation.

Air Instruments & Measurements, LLC
PMB 391 3579 E. Foothill Blvd, Pasadena, CA 91107 USA
(626) 791-1912 Fax: (626) 791-2739

URL: http://www.aimanalysis.com
e-mail: sales@aimanalysis.com

Bulletin 8500A 5/02

MODEL 8500 DISPERSIVE UV ANALYZER

Principle of operation: UV absorption spectroscopy; pattern recognition Differential Absorption Optical Spectroscopy [DAOS]

Sampling Technique: The Sample is measured in place in the Ambient air

Analysis and Spectral Ranges: The Model 8500 UV absorption analyzer takes a complete spectra over the range selected, typically from below 200 nm to above 450 nm

Ambient temperature: 32°F to 105°F (0°C to 40°C) standard; (Extended range available with temperature control)

Power: 115 V ±10%, 10 amp, 50/60 Hz; 230 V ±10%, 5 amp, 50/60 Hz

INTRODUCTION to DOAS

DOAS stands for *Differential Optical Absorption Spectroscopy*, a name first applied in Europe in the 1980's, but an analytical technique that has been used in laboratories for at least 50 years. Its primary benefits are the ability to quantitatively and simultaneously measure many different analytes within a sample with low detection limits. AIM applies this in our Models 5600, 8647A and 9050.

In the AIM systems, a dispersive spectrometer captures a spectra of the sample or standard being analyzed. [A spectra is the recording of the absorption strength as a function of wavelength.] Absorption spectroscopy follows very well-known and predictable rules. If two analytes both absorb at the same wavelength, for example, the resulting absorption will be the sum of the two individual absorptions. *Therefore it is possible to mathematically treat the signal produced, to eliminate interferences, and to produce the spectrum for each analyte being sought.* The ability to differentiate between adjacent absorption features is improved with increased system resolution. In addition, modern pattern recognition signal processing techniques [such as AIM's proprietary PLS SVD software] allow the analysis of such low concentrations that no recognizable patterns are apparent when inspecting the spectra.

Standards Preparation - The first step is to record (or otherwise obtain) spectra for the specific analytes being sought, as well as the other analytes that might be present, at the same set of system operating parameters [i.e. resolution, etc] over a range of concentrations above and below the levels anticipated or sought in the samples. These spectra are stored in memory.

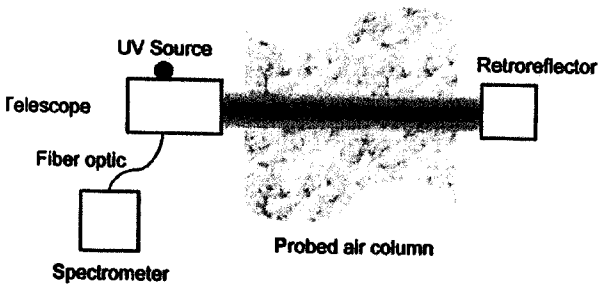

System Optical Set-Up - The analytical technique may be best known for its application to *Open-Path monitoring*, typically either single-pass [where the source is located at one end, and the detector at the other] or double-pass [where the source and detector are located at one end, and a reflector is located at the other]; but many other systems and applications exist [AIM applies it to remote sensing, in-situ monitoring and extractive analysis].

Sample Analysis - Modern analyzers allow the capture of a spectrum generally in less than 0.1 sec [most AIM systems capture the data within 10 msec]. Multiple spectra may be collected and added to improve Signal/Noise, and/or individual spectra may be analyzed to record changes as a function of time. Specific pre-selected analytes may be quantified by analyzing their specific absorption features, but also other "unknowns" can be analyzed by searching through a library of absorption spectra. In addition, the spectra can be stored for subsequent analysis for even a broader list of potential sample components.

Spectral Analysis - Since the absorption spectrum is a fundamental physical property, it is possible to compute the concentration of the absorbing gas directly from the measured spectra, without "calibrating" the analyzer each time with known concentrations of reference gases. This significantly reduces the time and cost of the analysis. However AIM does recommend the periodic introduction of cal gases as an independent verification of the credibility of the data.

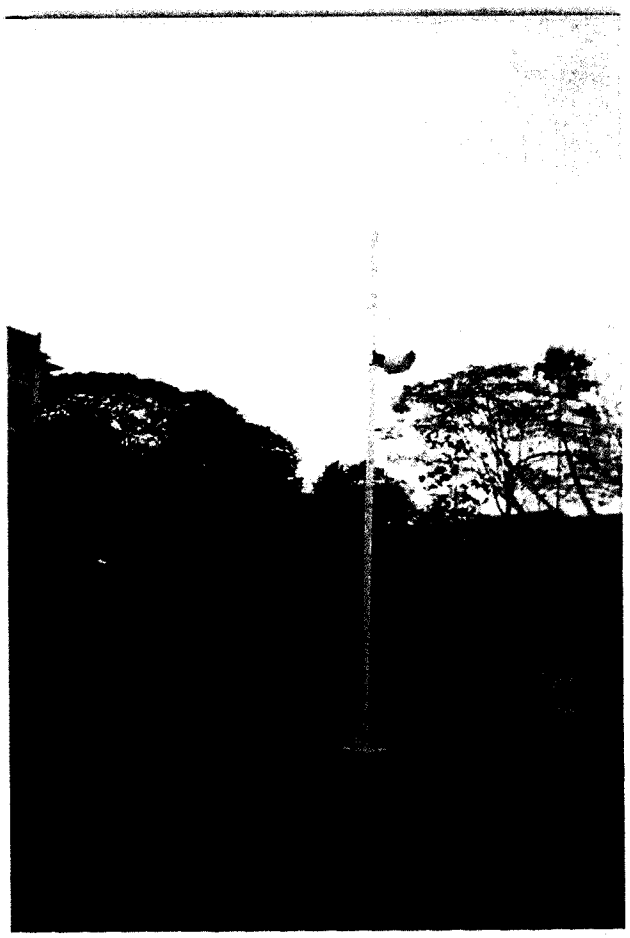

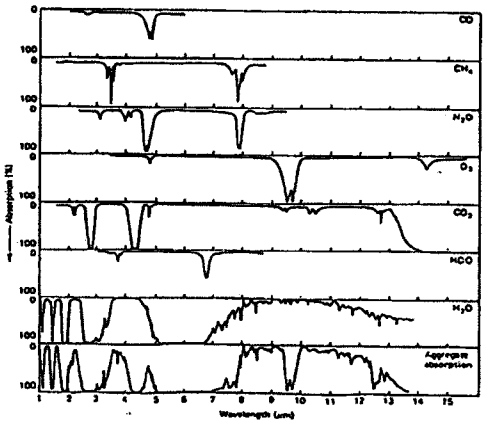

AIM Model 8300

AIR INSTRUMENTS & MEASUREMENTS, LLC

NDIR Open-Path Gas Analyzer, for Ambient Air Monitoring

MEASURING any or all:
CO, CO_2, CH_4, HC, N_2O, HCl, Higher levels of NO, SO2 & others

The Model 8300 NDIR analyzer employs GFC (gas filter correlation spectroscopy), as well as dual wavelength ratioing, to insure that the measurements are independent of transmitted light intensities, with digital signal processing and communications. Outputs include 4-20 MA analog, Programmable digital outputs, and modem interface [optional]

The Model 8300 is most typically used for pathlengths of 10 to 50m, which will produce mid to high ppb detection limits for most analytes, but longer pathlengths are available, [Note NO and SO2 are weak absorbers in the IR, so UV should be used for high sensitivity measurements].

H2O and CO2 are known interferences in the IR. AIM avoids them by applying GFC where practical, selecting measurement absorption bands outside of those of the interfering gases, and/or also measuring the interference and subtracting.

The Model 8300 was first introduced as an R&D tool more than 25 years ago, and has been developed from more than 30 years of practical field in-situ, open-path and remote sensing experience, in over 4,000 installations in 35 countries.

FEATURES

- ***Open-Path*** - No sample contact
- ***Fast Response Time*** – Seconds – allows prompt detection, analysis and adjustments/warnings.
- ***High Sensitivity*** - Accurate measurements from ppb level concentrations and higher.
- ***High Precision*** - $\leq$ 1 % of Range
- ***High Accuracy*** - $\leq$ 1% of Range
- ***Low Drift*** - $\leq$ 1% of Range over 24 hours [zero and span]
- ***EPA Compliant*** - With an in-line internal calibration cell for manual or automatic cylinder gas calibrations.
- ***Reliable Design*** -The Model 8300 Analyzer features a simple, low-maintenance, rugged design. The PC based signal processing insure long-term trouble-free operation.

Air Instruments & Measurements, LLC
PMB 391 3579 E. Foothill Blvd, Pasadena, CA 91107 USA
(626) 791-1912 Fax: (626) 791-2739
http://www.aimanalysis.com; aimanalysis@earthlink.net

Bulletin 8300B 7/00

AIR INSTRUMENTS & MEASUREMENTS, INC. Air Instruments & Measurements, LLC
PMB 391, 3579 E. Foothill Blvd, Pasadena, CA 91107 USA 626-791-1912, Fax 626-791-2739
aimanalysis@earthlink.net http://www.aimanalysis.com

Open-Path Ambient Air Analyzers

Ambient air analyzers are often required or desired for environmental compliance monitoring of the surrounding (ambient) air, as well as for greenhouse gas studies. AIM offers several different ambient air analyzers based upon open-path (remote sensing) monitoring, or in special research applications requiring high reproducibility and sensitivity, extractive gas analysis. Only the open-path is discussed here.

Why Open-Path?

AIM has specialized in the development and application of analyzers that offer the highest level of reliability and accuracy. This is accomplished by measuring the sample in place as it exists in the real-world. Many years of experience has shown that collecting a sample [manually or automatically] allows the sample composition to be modified. Absorption on the walls of the collecting hardware, condensation, reaction, etc all can affect the sample integrity. In addition, automated sample collection adds hardware, increasing maintenance and replacement parts requirements. Measurement of the sample in place eliminates both the possibility of the sample composition being changed [and hence affecting accuracy], and also reduces maintenance requirements by eliminating the sampling systems, pumps, filters, valves, etc

What Systems are Available?

Our first open-path analyzer was a multi-component NDIR double-pass analyzer, developed in the late 1980's, our Model 8300 system with the analyzer and retroreflector separated by up to 25m, with the 3" telescope, and distances of 100s of meters up to 1 Km with larger telescopes.

In addition we offer our Model 8500 open-path **DOAS** based dispersive UV [DUV] analyzer, with an 8" telescope and retroreflector array, for high sensitivity single or multi-component ambient air monitoring of NO, SO2, BTX, Cl2, ClO2, NH3, etc and our Model 8647B combination DUV and DIR DOAS analyzer. All systems are designed to be fully EPA compliant.

Short or Long Pathlengths?

There are two primary applications for the Open-Path analyzers. One is for large area or fenceline monitoring. These devices normally have optical pathlengths of hundreds of meters to 1KM or even more. A primary benefit of this long pathlength is that unsophisticated systems can easily provide high sensitivity [since from Beer's Law, absorption of light is proportional to concentration times the optical pathlength], and will provide an averaged value over this distance. But this benefit can easily become a limitation, as it can be radically biased by atmospheric turbulence, scintillation, and/or one or more emission points within the beam trajectory. Therefore AIM developed a new high sensitivity short path ambient air monitor.

The short pathlength high sensitivity ambient air monitor is particularly well suited for urban locations, allowing the direct measurement in place (without sampling) but in a physically limited and

controllable location… typically at physical separations of 5 to 15m (or double-pass optical pathlengths of 10 to 30m).

How is this accomplished? Why don't other companies offer this possibility?

There are at least four ways to obtain high system sensitivity, to measure low ppb ambient air concentrations. Extending the optical pathlength is simply one of them. The other three that AIM applies are:

(a) Averaging multiple measurements – averaging will improve the S/N by the $\sqrt{}$(# samples). Since the detection limit is generally defined as 2x the noise level, improving S/N (signal to noise) will allow detection of lower concentrations. However the traditional systems employing scanning spectrometers are limited in the number of samples that can be averaged and still provide a reasonable response time. However, the AIM system time for a single measurement is 10 msec, as we employ a 2048 element array detector allowing ALL wavelengths to be collected simultaneously. One hundred scans can be performed in 1 second, and 10,000 scans in 100 seconds (which is less than 2 minutes). (The square root of 10,000 is 100!)

(b) Increased spectrometer resolution – Increasing resolution significantly increases the absorption strength for most gases at atmospheric pressure. However, scanning systems must balance resolution with speed of response. The higher the resolution [where increased resolution means that the wavelength range ($\Delta\ \lambda$) sampled is smaller], the longer a scanning system takes to scan the range of wavelengths to be sampled. The AIM system does NOT scan, and hence can increase the resolution as much as is desired, and in fact could theoretically use all 2048 detector elements to ONLY measure the gas of interest [such as BTX or benzaldehyde or ClO2, etc].

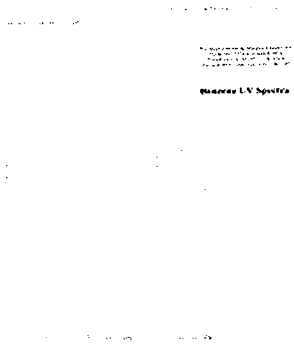

Normal Resolution

An example of high resolution is displayed here.

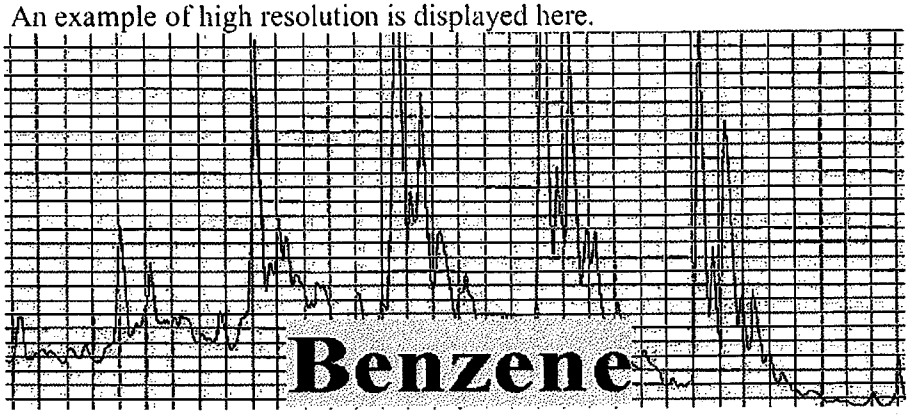

(c) sample a different wavelength with a stronger absorption coefficient …as we see in fact each of the major lobes of the benzene spectra is actually several different absorption lines being averaged together. The higher resolution allows the separation and measurement of each of these lines. AIM locks onto this entire high resolution spectra and applies DOAS signal processing for its measurement.

Introduction to DOAS

DOAS stands for *Differential Optical Absorption Spectroscopy*. This name was first applied in Europe in the 1980's, but the analytical technique has been used in laboratories for at least 50 years. Its primary benefits are the ability to quantitatively and simultaneously measure many different analytes within a sample with low detection limits.

A device is used to capture a spectra of the sample or standard being analyzed. [A spectra is the recording of the absorption strength as a function of wavelength]. Typical devices are dispersive spectrometers or fourier transform spectrometers, for recording spectra in the UV, visible and/or IR. Alternately a tunable laser-based system might be applied. In addition, today, a PC is generally used for its high-speed processing as well as its data storage capabilities.

Absorption spectroscopy follows very well-known and predictable rules. If two analytes both absorb at the same wavelength, for example, the resulting absorption will be the sum of the two individual absorptions. *Therefore it is possible to mathematically treat the signal produced, to eliminate interferences, and to produce the spectrum for each analyte being sought.* The ability to differentiate between adjacent absorption features is improved with increased system resolution. In addition, modern pattern recognition signal processing techniques allow the analysis of such low concentrations that no recognizable patterns are apparent when visually inspecting the spectra.

Standards Preparation - The first step is to record (or otherwise obtain) spectra for the specific analytes being sought, as well as the other analytes that might be present, at the same set of system operating parameters [i.e. resolution, etc] over a range of concentrations above and below the levels anticipated or sought in the samples. These spectra are stored in memory.

System Optical Set-Up - The analytical technique is best known for its application to *Open-Path monitoring*, typically either single-pass [where the source is located at one end, and the detector at the other] or double-pass [where the source and detector are located at one end, and a reflector is located at the other]; but other systems exist [for example the AIM SCAQMD remote vehicle exhaust analyzer is a DOAS system with an eight-pass open-path optical projection system].

Alternately the sample may be brought into a sample cell, and measured in place in the cell.

Sample Analysis - Modern analyzers allow the capture of a spectrum generally in less than a second. Multiple spectra may be collected and added to improve Signal/Noise, and/or individual spectra may be analyzed to record changes as a function of time. Specific pre-selected analytes may be quantified by analyzing their specific absorption features, but also other "unknowns" can be analyzed by searching through a library of absorption spectra. In addition, the spectra can be stored for subsequent analysis for even a broader list of potential sample components.

Spectral Analysis - Since the absorption spectrum is a fundamental physical property, it is possible to compute the concentration of the absorbing gas directly from the measured spectra, without "calibrating" the analyzer each time with known concentrations of reference gases. This significantly reduces the time and cost of the analysis. However AIM does recommend the periodic introduction of cal gases as an independent verification of the credibility of the data.

Air Instruments & Measurements, LLC
PMB 391, 3579 E. Foothill Blvd, Pasadena, CA 91107 USA 626-791-1912 Fax 626-791-2739
aimanalysis@earthlink.net http://www.aimanalysis.com

UV References

AIM's dispersive UV was first developed 10 years ago. The Model 5000 is the extractive version, Model 5600 is the in-situ open-path stack gas analyzer, Model 8500 is the open-path ambient air monitor and the 9050 series is the probe version of the stack gas analyzer. They have been sold to hundreds of installations and licensed to international partners. Selected references are attached.

The 8500 open-path ambient air monitor is a unique design. It has resulted from many years experience with open-path monitoring in stacks and across-the road (for vehicle exhaust monitoring).

Our current UV customers include:

One system.... Ric Opp ,
Ponderay Newsprint Co
422767 Highway 20
Usk, WA 99109-9771,
E-Mail Address:opprl@bowater.com
Tel: (509) 445-2123; Fax: (509) 445-1233

One system... Shang Hua, Chief Engineer
Wuzhong Instrument Co. Ltd
67 Chao Yang St, Litong District
Wuzhong City, Ningxia 751100, China
[86] 0953 392 9069 Fax: [86] 0953 392-9110
WZ.SH@163.com

One system.... Jorson [Jung-Chang] Lai
No. 4, Zen-Yi St.,
Fong-Shan City, 830, Taiwan
E-Mail Address: jorson@ms12.hinet.net
Tel: [886] 7 -740-3245; Fax: [886] 7-740-1693

And three systems... Wang Chong
TINA Instrumentation Inc
Beijing, China

AIR INSTRUMENTS & MEASUREMENTS, LLC
PMB 391 3579 E. Foothill Blvd, Pasadena, CA 91107 USA 626-791-1912 Fax: 626-791-2739
e-mail: aimanalysis@ earthlink.net WWW ... http://www.aimanalysis.com

INTRODUCTION to DOAS

DOAS stands for *Differential Optical Absorption Spectroscopy*, a name first applied in Europe in the 1980's, but an analytical technique that has been used in laboratories for at least 50 years. Its primary benefits are the ability to quantitatively and simultaneously measure many different analytes within a sample with low detection limits. AIM applies this in our Models 5600, 8647A and 9050.

In the AIM systems, a dispersive spectrometer captures a spectra of the sample or standard being analyzed. [A spectra is the recording of the absorption strength as a function of wavelength.] Absorption spectroscopy follows very well-known and predictable rules. If two analytes both absorb at the same wavelength, for example, the resulting absorption will be the sum of the two individual absorptions. *Therefore it is possible to mathematically treat the signal produced, to eliminate interferences, and to produce the spectrum for each analyte being sought.* The ability to differentiate between adjacent absorption features is improved with increased system resolution. In addition, modern pattern recognition signal processing techniques [such as AIM's proprietary PLS SVD software] allow the analysis of such low concentrations that no recognizable patterns are apparent when inspecting the spectra.

Standards Preparation - The first step is to record (or otherwise obtain) spectra for the specific analytes being sought, as well as the other analytes that might be present, at the same set of system operating parameters [i.e. resolution, etc] over a range of concentrations above and below the levels anticipated or sought in the samples. These spectra are stored in memory.

System Optical Set-Up - The analytical technique may be best known for its application to *Open-Path monitoring*, typically either single-pass [where the source is located at one end, and the detector at the other] or double-pass [where the source and detector are located at one end, and a reflector is located at the other]; but many other systems and applications exist [AIM applies it to remote sesning, in-situ monitoring and extractive analysis].

Sample Analysis - Modern analyzers allow the capture of a spectrum generally in less than 0.1 sec [most AIM systems capture the data within 10 msec]. Multiple spectra may be collected and added to improve Signal/Noise, and/or individual spectra may be analyzed to record changes as a function of time. Specific pre-selected analytes may be quantified by analyzing their specific absorption features, but also other "unknowns" can be analyzed by searching through a library of absorption spectra. In addition, the spectra can be stored for subsequent analysis for even a broader list of potential sample components.

Spectral Analysis - Since the absorption spectrum is a fundamental physical property, it is possible to compute the concentration of the absorbing gas directly from the measured spectra, without "calibrating" the analyzer each time with known concentrations of reference gases. This significantly reduces the time and cost of the analysis. However AIM does recommend the periodic introduction of cal gases as an independent verification of the credibility of the data.

Signal Processing Strategy

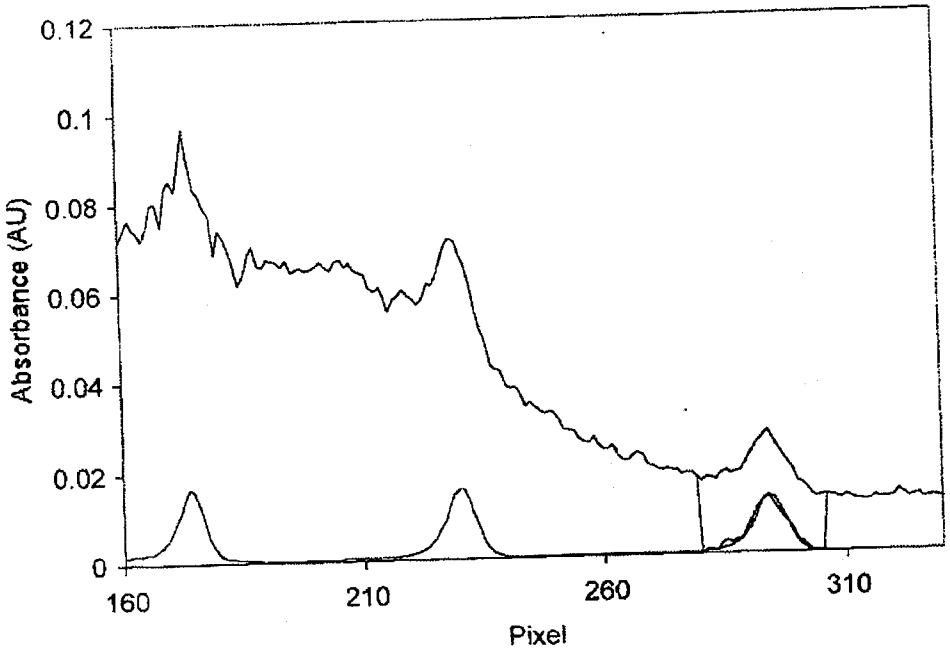

Extract spectrum

↓

Baselining

↓

SVD CLS

↓

Cal. Adjustment

↓

27.3 ppm-m NO

RECEIVED
JAN 22 2009
U.S. TRADE AND DEVELOPMENT AGENCY

FEASIBILITY STUDY FOR THE INTEGRATED CLIMATOLOGY, AGRO-METEOROLOGICAL, AIR POLLUTION FORECAST AND WARNING, COMPUTATION AND TRAINING CENTER FOR THE ROMANIAN NATIONAL METEOROLOGICAL ADMINISTRATION

INTEROPERATE PROJECT

FINAL REPORT

4. Bound copy

This report was funded by the U.S. Trade and Development Agency (TDA), an export promotion agency of the United States Government. The opinions, findings, conclusions, or recommendations expressed in this document are those of the author(s) and do not necessarily represent the official position or policies of TDA

December, 2008

BURGESS & NIPLE, INC.

The U.S. Trade and Development Agency

The U.S. Trade and Development Agency (USTDA) advances economic development and U.S. commercial interests in developing and middle income countries. The agency funds various forms of technical assistance, early investment analysis, training, orientation visits and business workshops that support the development of a modem infrastructure and a fair and open trading environment.

USTDA's strategic use of foreign assistance funds to support sound investment policy and decision-making in host countries creates an enabling environment for trade, investment and sustainable economic development. Operating at the nexus of foreign policy and commerce, USTDA is uniquely positioned to work with U.S. firms and host countries in achieving the agency's trade and development goals. In carrying out its mission, USTDA gives emphasis to economic sectors that may benefit from U.S. exports of goods and services.

Mailing and Delivery Address: 1000 Wilson Boulevard, Suite 1600, Arlington, VA 22209-3901
Phone: 703—875--4357 Fax: 703—875—4009 Web site: www.ustda.gov email: infoustda.gov

TABLE OF CONTENTS

		Page
I.	EXECUTIVE SUMMARY	1
II.	EXISTING SYSTEMS AND TECHNICAL SOLUTIONS FOR INTEGRATION (TASKS 1 AND 2)	3
	A. Initial Meeting and Work Plan	3
	B. Model Usage for Existing and Future Conditions	3
	C. Numerical Weather Modeling in Romania – Current Situation	3
	D. Future Plans for Numerical Weather Prediction	11
	E. Agricultural Models	17
	F. Database Management	22
III.	COMPUTING NEEDS ASSESSMENT TO SUPPORT MODELS (TASK 3)	77
	A. General	77
	B. Introduction	78
	C. Assessment of Requirements and current Capabilities	79
	D. Proposed System	81
	E. Training Facility and Methods	91
IV.	METEOROLOGICAL TRAINING NEEDS ASSESSMENT (MET-TRAIN) (TASK 4)	82
	A. Background	82
	B. Needs	83
	C. Existing Courses	85
	D. Training Assessment and Recommendations	86
V.	EVALUATION OF THE SOCIAL, ECONOMIC, ENVIRONMENTAL AND POLITICAL IMPACT GENERATED BY THE PROPOSED SYSTEM (TASK 5)	93

VI. CONSULTATIVE NATIONAL WORKSHOP FOR ASSESSING THE PROPOSED METEOROLOGICAL SYSTEM AND SUBSYSTEMS (TASK 6)

B&N Workshop 106

RNAM Worshop 126

WinDigita Workshop 156

VII. ASSESS THE REQUIRED EQUIPMENT AND ASSOCIATED INVESTMENTS FOR THE INTEROPERATE PROJECT, AND DEVELOP A PHASED IMPLEMENTATION PLAN (TASK 7).

A. Assessment of the Required equipment..... 168

B. Analyze Available Suppliers of the Configurations Recommended Above 171

C. The Estimated Cost –effectiveness of the Proposed System 171

D. Implementation Schedule 173

E. Summary of Equipment Suppliers and Cost 174

F. Sensor Cost Estimate 175

G. Summary of Recommended Cost 175

H. Summary of Minimal Cost 177

I. List – Potential Suppliers of Sensors and Computing Equipment 178

Attachment A – High Performance Computing Facility
The Ohio State University Supercomputer Center Report

Attachment B – Interoperate Equipment Data Details – 136 Page Optional Supplement

LIST OF TABLES

Table No.	Description	Page
1	RNMA Storage Pools	81

INTEROPERATE Romania Project

Final Report

I. EXECUTIVE SUMMARY

The INTEROPERATE Feasibility Study Project was developed by the Romania National Meteorological Agency (RNMA) to improve the ability of the agency to collect and interpret meteorological data and to develop needed predictions and warnings for public dissemination. It was funded by a U.S. Trade and Development Agency grant of $340,100 awarded to Romania in August 2004. Burgess & Niple, Inc. (B&N) was awarded a contract to prepare the feasibility study, with assistance from subconsultants, Innovative Hydrology and The Ohio State University/Ohio Supercomputer Center of the United States, and 3CTotalConsult and WinDigita of Bucharest, Romania. The work began in June of 2005 with a meeting of the consultants and RNMA senior staff in Bucharest. The scope of the study and report includes an assessment of existing equipment and methods, an assessment of methods of coordination of new database systems with existing SIMIN and DESWAT database systems, identification of computer systems needed to perform simulations and manage database systems, identification of training needs, and identification of environmental and developmental effects of implementing INTEROPERATE. The report addresses these requirements.

The project also includes the purchase and installation of three sets of sensors to determine their suitability for use in the project. These are present weather sensors, soil moisture sensors, and a mobile automatic weather station. These have been delivered, installed and have functioned satisfactorally. A tethersond air quality monitoring system was planned as part of the pilot study, but was deleted due to excessive cost of purchase.

Flooding and related damages in Romania are severe. For 2005, effects are as follows:

<u>Flooding damage in Romania for the calendar year 2005</u>

Locations affected:	*1734*
Number of weather-related deaths	*76*
Estimated cost of damage	*EU 1.7 Bil ($1.2Bil)*
Households damaged	*93,976*
Businesses damaged	*1063*
Agricultural area damaged	*656,392 Ha*
Roadways of all types damaged or destroyed	*15,500 km*

Bridges and culverts damaged or destroyed *913*
Railway damaged or destroyed *24km*
Flood control structures damaged or destroyed *630*

The required investment for a recommended system and a minimal or starter system is estimated to be in the range of $3-4 million initial cost, and $1-1.5 million annual cost, depending on the option selected, with details as shown in the table below.

			Minimum Facility		Recommended Facility	
			Total Cost	***Annual Cost***	***Total Cost***	***Annual Cost***
TOTAL, All Costs	Sensors, Computer, RDBM		$2,743,445	$420,089	$3,711,557	$613,089
Amortized Cost	6-yr life at 6% interest:		$556,919		$753,446	
TOTAL Annual Cost				$977,008		$1,366,535

While it may be impossible to eliminate the harmful effects of flood and drought, the report provides many ways to reduce the level of risk and damage, and to increase agricultural production, primarily through better sensors, analytical development of critical information, and resulting public warnings and actions. Even an improvement of 0.1% in agriculture output from the better data would repay the investment in one year. But the greatest, and un quantifiable improvement would be in lives, injury, and economic damage that can be reduced or eliminated. Clearly a worthwhile investment viewed in the Romanian National perspective.

TASK I & 2

EXISTING SYSTEMS AND TECHNICAL SOLUTIONS FOR INTEGRATION

EXISTING SYSTEMS AND TECHNICAL SOLUTIONS FOR INTEGRATION (TASKS 1 AND 2)

A. Initial Meeting and Work Plan

Existing data systems were reviewed with RNMA staff in Bucharest to determine existing equipment, software, and institutional arrangements for operating the data storage and management systems for the RNMA. The initial meeting was held in May 2005, and a memorandum report describing the characteristics of the system was written and reviewed by all participants. A revised version of that report became the basis for the subsequent steps.

B. Model Usage for Existing and Future Conditions

ANM is interested in evaluating various models and model characteristics related to the field of general weather modeling, air pollution modeling, and agro-meteorology modeling. Only the weather modeling and agro-meteorology modeling will be addressed at this time.

ANM desires general improvements to forecasts, especially severe weather events, and a better response to the incidents. This would include severe weather warning and detection. ANM provided a number of models that they are interested to use operationally, but most importantly identified the need for very high resolution modeling (2-3 km) following the development trend of the two consortia in which ANM is involved. These consortia are ALADIN and the involvement in the AROME model, and COSMO in the form of the LMK model. ANM is also interested in investigating new and developing models in which are supported by a consortium.

C. Numerical Weather Modeling in Romania – Current Situation

There are three models included in the Numerical Weather Prediction effort in Romania. These models consist of the ALADIN, HRM and MM5 models. A description of these models as provided by Doina Banciu and Victor Pescaru follows.

1. ALADIN (Aire Limitée Adaptation Dynamique développement InterNaltional)

The first of the three models is ALADIN. ALADIN is a limited area model developed inside the ALADIN project (htttp://www.cnrm.meteo.fr/aladin/) initiated by Meteo-France. It was especially designed for the simulation of the meso-scale scale phenomena. Built in a very flexible manner, it is possible to be integrated over different domains in varying resolutions from tens down to 1-2 kilometers (in the case of the non-hydrostatic version). During the more than 10 years of the project existence the model was continuously improved and developed, and is likely the most popular numerical weather model operating in Europe.

Like its global counterpart Arpege (*Courtier et al.*, 1991), Aladin is a spectral, primitive equation model. ALADIN includes hydrostatic/non-hydrostatic, eulerian/semi-Lagrangian scheme options, DFI initialization and more recently 3D VAR data assimilation.

The model contains a complete physical package (*Geleyn et al.*, 1994):

- d-two stream radiation scheme (*Ritter and Geleyn, 1992*) including long- and short-wave fluxes in the atmosphere and at the surface; full cloud - radiation feedback; diagnostic derivation of cloud cover (from relative humidity and convection).

- Grid-scale precipitation scheme including simple microphysics (*Kesller, 1969, Clough and Franks, 1991*).

- Mass flux convection scheme (*Bougeault 1985*) including small scales features.

- Level-1 scheme of vertical diffusion in the atmosphere, similarity theory (*Louis, 1979*) at the surface.

- Friction due to the sub-grid orography.

- Two-layer soil model.

- Parameterization of the surface processes: *Interaction Soil Biosphere Atmosphere (ISBA, Noilhan and Planton, 1989, Giard and Bazile, 2000.*

Using different configurations, the model is used for specific tasks:

a) Forecast (direct integration - 001): hydrostatic/non-hydrostatic.
b) Post processing (927).
c) Interpolation from one grid to another (927).
d) Preprocessing of the surface fields (923).
e) Data assimilation:
   - Optimal interpolation analysis (701)
   - Variational analysis (3D VAR, 3D FGAT – 131)
f) Research:
   - Perturbation studies: linear tangent model (501)
     adjoint model (401)
   - Singular vector computation (801).

The Numerical Weather Prediction System at the National Institute of Meteorology and Hydrology in Bucharest, based on the ALADIN model, has been used operationally since 1997 (when it was implemented on a DEC ALPHA platform).

The operational applications were built following the limited computing power, with strong constraint on domain size and used configurations (for the time being only 4 configuration of the model are used: a, b, c, and d)

At present, the ALADIN model is integrated on a SUN E4500 platform (8-CPU 400GHz, 64 bytes architecture) twice per day over two different domains up to 48 forecast range.

For the time being the model is run in dynamical adaptation mode. The French global model, ARPEGE, following a special agreement with Meteo France, supplies the initial and boundary conditions. The file retrieval is done by ftp from a dedicated server (localized in Toulouse).

By using a 2TL Semi-lagrangian scheme, the model time step is set up at 450s for the integration at 10km resolution, and 900s for the 24 km resolution.

The integration time:

- For 48h integration at 10 km resolution: 40 minutes on SUN Enterprise 4500.
- For 48h integration at 24 km resolution: 22 minutes on SUN Enterprise 4500.

The operational suite includes the post processing (every 3 hours), the generation of standard output (GRIB format routed towards the visualization systems in Bucharest and to the Regional Meteorological Centers), statistical adaptation (MOS, Kalman filter) of the direct model output and verification procedures. Additional graphical products (meteograms, pseudo – satellite images, height of specific isotherms, stability indexes, etc) are automatically generated; they are available on the ALADIN website.

The ALADIN model results are used as input data for the wave models (WAM, VAGROM) and for the diffusion and transport of pollutants models (MEDIA).

2. High Resolution Model (HRM)

Characteristics

- Rotated latitude/longitude grid
- Mesh sizes between 0.25° (~ 20 km); 41 x 37 points
- Arakawa C-grid, second order centered differencing
- Hybrid vertical coordinate, 20 layers
- Split semi-implicit time stepping; Dt = 300s

- Lateral boundary formulation due to Davies
- Radiative upper boundary condition as an option
- Fourth-order horizontal diffusion, slope correction
- Adiabatic implicit non-linear normal mode initialization
- Integration up 78 hours, twice per day.

Physical Parameterizations

- d-two stream radiation scheme (*Ritter and Geleyn, 1992*) including long- and short-wave fluxes in the atmosphere and at the surface; full cloud - radiation feedback; diagnostic derivation of partial cloud cover (rel. hum. and convection).
- Grid-scale precipitation scheme including parameterized cloud microphysics (*Doms and Schättler, 1997*).
- Mass flux convection scheme (*Tiedtke, 1989*) differentiating between deep, shallow and mid-level convection.
- Level-2 scheme of vertical diffusion in the atmosphere, similarity theory (*Louis, 1979*) at the surface.
- Two-layer soil model including snow and interception storage.
- Three-layer version for soil moisture as an option.

The model results are used as input data for INPUFF pollution forecast model.

3. **MM5 Model (PSU/NCAR mesoscale model)**

Model Characteristics (present implementation)

- Non-hydrostatic version.

- Full operational implementation on a SUN Enterprise 3500 workstation (4 processors).

  - Initial and boundary conditions from GFS and the sea surface temperature from ETA model.

- Regular polar stereographic projection Δx=15 Km (103 x 79 points), 25 vertical levels; Δt=45 s.

Physical Parameterizations (present implementation)

- Cloud effects are considered, but only surface atmospheric radiation effects are taken into account.
- Moisture Physics: Simple ice (Dudhia).
- Grid-scale precipitation scheme including parameterized cloud.
- Microphysics (Doms and Schdttler, 1997).
- Convection scheme: Grell
- Vertical diffusion: TKE (Burk-Thompson, 1989).
- Surface energy budget used to calculate ground temperature.
- Horizontal diffusion of perturbation temperature.

4. ALADIN Model

Hydrostatic Version

Simulations were carried out for the same configuration used within the operational suite at 10 km resolution (100 x 100 points, 41 vertical levels, Δt=450s).

Integration time for 48 hours forecast using 8CPU: 20 minutes (in comparison with 40 minutes on SUN platform using 8 processors).

Non-Hydrostatic Version

The non-hydrostatic version is included in the ALADIN code, which is activated by a simple switch.

In order to demonstrate the functionality of the model at 2.5 km, there were carried out several simulations for the severe weather event of 28th of August 2004, when tornadic winds (waterspouts), intense electric activity, sporadic hail and exceptionally amount of precipitation (190 l/m^2 cumulated in 12 h, at Constanta -on the shore, 318 l/m^2 cumulated in 24 h at Pantelimon-in land) were registered in the southeastern part of Romania.

A preoperational suite (24-hour forecast) was fully installed on the cluster platform. Due to the computing power limitation, the predefined domain size was set up to about 500 x 500 km, considered to be large enough for the simulation of local severe weather phenomena. For the analyzed case the domain was localized on the southeastern Romania, but depending on the requirements, it can be centered to other locations or even enlarged if more computing power will be available.

Integration time for 6-hour forecast (216 x 216 points, 41 vertical levels, Δt=60s)

- on SUN platform (E4500,) 8 CPU: ~ 5h 30minutes
- on Linux cluster 8 CPU: ~ 3h 30 minutes
- on Linux cluster 20 CPU: ~ 2h 12 minutes
- on Linux cluster 28 CPU: ~ 2h 11 minutes!

5. LM Model

The LM (Local Model) developed within the COSMO project was implemented on the Linux cluster platform and simulations at 7 and 2.8 km proved its functionality. The model is to be run twice per day up to 78-hour forecast for a domain covering Romania (16 –32° E, 42 – 51°N).

Characteristics

- Rotated latitude/longitude grid.
- Generalized terrain-following vertical coordinate, 35 layers at 14 km, 50 levels at 2.8 km.
- Arakawa-C grid, second order centered differencing.

- Time Integration: Second-order leapfrog HE-VI (horizontally explicit, vertically implicit) time-split integration scheme by default. Options for:

  a. a two time-level 2-nd order Runge-Kutta split explicit scheme/
  b. a three time-level #d semi-implicit scheme.

- Numerical Smoothing: 4-th order linear Horizontal diffusion with options for a monotonic version including an orographic limiter. Rayleigh dumping in upper layers. 3-d divergence damping and off-centering in split time steps.
- Initial Conditions – interpolated initial data from various coarse-grid driving models (GME and LM in present configuration) or from the continuous LM data assimilation stream. Option for user-specified idealized initial fields.
- Lateral Boundary Conditions – 1-way nesting by Davies –type lateral boundary formulation. Option for periodic boundary conditions.
- Top Boundary Conditions: Options for rigid lid condition and Rayleigh dumping layer.
- Initialization; Digital filter initialization of unbalanced initial states with options for adiabatic and diabatic initialization.

Physical Parameterization

- Sub-Grid-Scale Turbulence: Prognostic TKE closure at level 2.5 including effects from sub-grid scale condensation and from thermal circulations.
- Surface Layer Parameterization: Surface layer scheme based on TKE including laminar turbulent roughness layer.
- Grid-Scale Cloud and Precipitation: Cloud-water condensation and evaporation by saturation adjustment. Precipitation formation by a bulk microphysics parameterization including vapor, cloud water, rain and snow with column equilibrium for the precipitating phases. Option for a new bulk scheme including cloud ice. Option for a 3-d precipitation transport.

- Sub-Grid-Scale Clouds: Sub-grid scale cloudiness is interpreted by an empirical function depending on relative humidity and height. Corresponding cloud water content is also interpreted.
- Moist Convection: *Tiedtke (1989)* mass-flux convection scheme with equilibrium closure based on moisture convergence. Option for the *Kain-Fritsch* 91992) convection scheme with non-equilibrium CAPE-type closure.
- Radiation: δ-two stream radiation scheme (*Ritter and Geleyn, 1992*).
- Soil Model: Two layer soil model after (*Jacobsen and Heise, 1992*) employing the extended force-restore method; snow and interception storage are included. Option for a new multi-layer version of the model based on the direct numerical solution of the heat conduction equation.
- Terrain and Surface Data: All external parameters of the model are available at various resolutions for a predefined region covering Europe.

Code and Parallelization

- Modular code structure using standard Fortran-90 constructs.
- Parallelization done by horizontal domain decomposition.
- *Message Passing Interface* (MPI) is used for message passing on distributed memory machines.

D. Future Plans for Numerical Weather Prediction

Like for almost National Meteorological Services, the main goal of ANM is the general improvement of the forecasts, especially for severe weather events. Improved forecasts will provide a more accurate characterization of weather events (both in lead time, and magnitude).

The models expected to be integrated operationally are very high resolution models (2-3 km) following the development trend of the two consortia in which ANM is involved, ALADIN (AROME model) and COSMO (LMK model). The Weather Research and Forecast (WRF) model will also be described.

1. AROME Model

AROME is project driven by Meteo France in order to prepare a system meant to become operational at 2.5 - 3 km resolution. (AROME - **A**pplication of **R**esearch to **O**perations at **Me**soscale) joint by ALADIN consortium within the ALADIN-2 project (AROME Limited Area Decentralised International Network). The concept of AROME model (non-hydrostatic, convection-resolving model) is similar to MM5, WRF, and LM. Its main mission is to improve forecasts of short-range mesoscale events (such as convection), QPF and low-level weather forecasts.

The dynamic core of the AROME model is ALADIN non-hydrostatic (a robust one at rather low costs, but with very good quality of simulation) and the physics is derived from Meso-NH system (www.aero.obs-mip.fr/mesonh/). Data assimilation is similar to ALADIN-3DVar, with much more mesoscale data (low-level, satellite, radar).

AROME Numerics

- Spectral LAM with linear collocation grid and rectangular truncation i.e., no spectral aliasing.
- Semi-Lagrangian advection.
- Dynamics derived from Laprise's system: terrain-following mass vertical coordinate, compressible non-hydrostatic equations.
- Discrete 2nd-order accurate, preserving energy and angular momentum.
- NH dyn variables: vertical divergence, NH mass departure.
- SI time-step, iteration of nonlinear terms, spectral solver.

AROME Physics

- Microphysics: ICE3: 6 species of water (vapor, cloud liquid, rain, cloud ice, graupel, and snow).

- Turbulence: 1D version of the MesoNH scheme (prognostic TK, Bougeault-Lacarrère mixing length closure).

- Radiation: from ECMWF (SW = Fouquart-Morcrette, LW = RRTM), 6 visible spectral bands, over 140 IR bands, ozone and aerosols.

- Surface: external software (towns, vegetation, sea, lakes, snow) with pluggable slow- and fast-hydrology, prognostic marine mixed layer.

AROME Costs

- The un-un-optimized grid-point cost is 3 times ALADIN, probably 2 times after optimization.

- The increase in grid size means a factor dx.dy.dt = 4 x 4 x 7 i.e. AROME is about 300 times more expensive than 10-km for the same lead time and domain.

The AROME model will be implemented at ANM. Simulations on the case of August 28, 2004 (the same case used for NH-ALADIN simulation) have been carried out at Meteo-France. The results of these experiments emphasized the importance of meso-scale data assimilation.

2. Weather Research Model (WRF)

The United States is currently engaged in a new model called the Weather Research and Forecast (WRF) model. Development led by the National Center of Atmospheric Research (NCAR), National Oceanographic and Atmospheric Administration (NOAA) Forecast Systems Lab (FSL), and NOAA/National Center for Environmental Prediction (NCEP). There are additional partnerships with AFWA, Federal Aviation Administration (FAA), and National Research Laboratory (NRL).

There are two efforts that are closely coupled. The first effort is the Advanced Research WRF (ARW), which is undergoing development within the academia and amongst weather research entities. The second effort is named the Non-hydrostatic

Mesoscale Model (NMM), which is developed to be run operationally at the National Center of Environmental Prediction (NCEP) in the United States. WRF represents the latest in regional modeling with grid points down to just a few km in horizontal distance.

WRF model characteristics include the following:

- Includes research and operational models.
- Highly modular, single source code with plug-compatible modules.
- State-of-the-art, transportable, and efficient in a massively parallel computing environment.
- Design priority for high-resolution (non-hydrostatic) applications.
- Integrates full compressible non-hydrostatic equations on a mass-based terrain-following coordinate.
- Can be run either for idealized or real-data cases.
- Options for on and two-way interactive nests.
- Contains a prototype moving nest.

3. PROS and CONS

WRF has much finer horizontal resolution than the MM5. WRF effective resolution is:

$$\sim 7*\Delta x,$$

while MM5 effective resolution is

$$\sim 10*\Delta x.$$

WRF ice microphysics is improved over MM5.

WRF-NMM is a large subset of WRF where they dynamical core is developed by NOAA/NWS/NCEP/ WRF-NMM is a freely available community model. The product is well supported by several online user forums and regular tutorial classes.

WRF-NMM has been tested on the following platforms:

Vendor	Hardware	O.S.	Compiler
IBM	SP Power-*x*	AIX	vendor
SGI	MIPS	IRIX	vendor
HP/COMPAQ/DEC	Alpha	Tru64	vendor
Various	IA-32	LINUX	PGI
Various	Opteron	LINUX	PGI

The Weather Research and Forecasting (WRF) model is a next generation mesoscale numerical weather prediction system designed to serve both operational forecasting and atmospheric research needs. The effort to develop WRF has been a collaborative partnership, principally among the National Center for Atmospheric Research (NCAR), the National Oceanic and Atmospheric Administration (NOAA) – National Centers for Environmental Prediction (NCEP) – Forecast Systems Laboratory (FSL), the Air Force Weather Agency (AFWA), the Naval Research Laboratory, and the Federal Aviation Administration (FAA).

There are two main varieties of the WRF model, differing in that one is entirely operational and the other is used generally for research application. The NCAR WRF-ARW (Advanced Research WRF) is the research version of the WRF, which has a slightly more complex dynamical core. The NCEP WRF-NMM (non-hydrostatic Mesoscale Model) is the operational version of the WRF model. A significant difference in the WRF-ARW and the WRF-NMM is the initialization and the dynamical core. Physics and software framework are shared between the WRF-ARW and the WRF-NMM. The characteristics of the WRF model are as follows:

<u>WRF-ARW</u>

- Terrain-following hydrostatic pressure vertical coordinate.
- Arakawa C-Grid.
- 2nd or 3rd order Runge-Kutta split-explicit time differencing.

- 2nd to 6th order horizontal and vertical advection schemes.
- Conserves mass, momentum, dry entropy, and scalar using flux form prognostic equations.

WRF-NMM

- Terrain-following hybrid (sigma-pressure) vertical coordinate.
- Arakawa E-grid.
- Explicit time differencing.
- Conserves mass, kinetic energy, enstrophy, and momentum, as well as a number of additional first order and quadratic quantities using 2nd order finite differencing.

In general both versions of the WRF model are:

- Highly modular, single source code with plug-compatible modules.
- State-of-the-art, transportable, and efficient in a massively parallel computing environment.
- Non-hydrostatic with a hydrostatic option implemented at run time.

The popularity of the WRF model is growing throughout the world. WRF forecasts are being made in Europe by the Institute of Atmospheric Sciences (ISAC) of the Italian National Research Council (CNR), and by the National Observatory of Athens. The National Observatory of Athens is providing forecast of Europe, while CNR is providing forecasts for Italy.

The WRF-NMM model is a freely available community model. WRF supported platforms are shown in the table below.

Vendor	Hardware	OS	Compiler
Apple (*)	G4/G5	MacOS	IBM
Cray Inc.	X1, X1e	UNICOS	Cray
	Opteron	Linux	PGI
HP/Compaq	Alpha	Tru64	Compaq
	Itanium-2	Linux	Intel
		HPUX	HP
IBM	Power-3/4/5; BG/L (**)	AIX	IBM
SGI	Itanium-2	Linux	Intel
	MIPS	IRIX	SGI
Sun (*)	UltraSPARC	Solaris	Sun
various	Xeon and Athlon	Linux	PGI, Intel, Pathscale
	Itanium-2 and Opteron		

(*) dm-parallel not supported yet; (**) Experimental, not released

It is recommended that RNMA continue to their participation within both the ALADIN and COSMO consortiums. RNMA has a great deal to gain from community models. RNMA is on course to adapt the AROME model for their use, and this should be further encouraged and continued.

It is also recommended that WRF be also incorporated into operations, likely at the expense of further MM5 development. The WRF community offers a great deal of support internationally. As is always the case in the United States, the meteorological modelers embrace the needs of modelers from other countries, especially those from national agencies. Quite often there is assistance offered for travel and subsistence for international scientists. It is suggested that benchmark tests be made with WRF to fully understand the processing requirements within the RNMA environment.

E. Agricultural Models

The RNMA has identified a need to improve agricultural models in order to maximize domestic crop yields. In particular, RNMA would like a model to simulate soil moisture for growing winter wheat and maize. RNMA has requested information regarding agricultural Decision Support System (DSS) to help support and maximize the effectiveness of crop selection and production in Romania.

DSS are used in agriculture for tactical, strategic, and policy level decision support. In essence data is collected, analyzed, and linked with appropriate decision rules that identify actions to assist in producer decision making. DSS rules are not developed to make a single recommendation but rather to provide decision makers with choices. DSS should be seen as a source of valuable tactical information. In the case of the RNMA there is a great desire to provide a tool to help producers to plan ahead and limit the losses associated with extreme weather events, especially drought. A well structured DSS will also be able to integrate science, economics, resource use, and environmental impact. For instance, with regard to economics, a given crop may provide greater yields but a low market price may in essence negate the greater yields, where a crop with lower yields but a much greater market price would be suggested.

Decision support has been available to agricultural producers for decades, though the use of DSS in agriculture is declining. The barriers to the wholesale adoption of agricultural DSS generally consist of a lack of connection between the scientist and the producer. The agricultural DSS often originate within the academia. This often has led to the development of a DSS that is too difficult to use while providing only limited information. An ineffective DSS is generally attributed to a poor understanding among researchers of how agricultural DSS are used by producers. This can be mitigated by designing a DSS in conjunction with targeted users. This way the DSS is most likely to have a positive impact on addressing agricultural decision processes.

An ideal DSS integrates the expert knowledge, management models, and timely data to assist producers with daily operational and long-range strategic decisions. The ultimate challenge is to produce a product that can be synthesized easily and quickly by the producers, without this the DSS system will likely be largely ignored by the producer.

With these concepts in mind, agricultural DSS supporting producers in Romania should be tightly coupled to climate modeling. Dialogue should be encouraged between the researchers building the application and the agricultural producers so that DSS function will result in something useful for the producer.

Up to now, RNMA has used a series of agricultural models which serves two purposes; the first is to characterize soil water conditions and the other is to plan and manage irrigation. The model effort is the basis of a DSS. These models are described below.

1. **Operational Models**: Soil Water Balance (SWB) and CROPWAT

- **SWB** is a very simple soil water balance model made in Excel spreadsheet for estimating soil moisture content at different depths levels (0-20 cm, 0-50 cm and 0-100 cm) for two crops: winter wheat and maize. T he model is run every week and requires as input the following data: the amount of rainfall and reference crop evapotranspiration for the previous week, crop coefficients and the initial soil water content at the beginning of the analyzed period. Model output: the available soil moisture (mc/ha), soil moisture deficit or excess and % of available soil water capacity. Depending of these percents a classification by humidity limit classes is made (extremely drought, strongly drought, moderate drought, and satisfactory supply, excess).

- **CROPWAT** is a software application for irrigation planning and management, developed by the Land and Water Development Division of FAO and is used operationally only for calculation crop reference evapotranspiration (ETo), that is input into the SWB model. CROPWAT uses the FAO (1992) *Penman-Monteith* method for calculating the reference crop evapotranspiration. The program uses a flexible menu system and file handling, and extensive use of graphics. As climatic input data, CROPWAT requires decadal or monthly means values of minimum and maximum air temperature, relative humidity, sunshine duration and wind speed. This estimation together with decadal/monthly rainfall, crop and soil data is used in daily crop water requirement, irrigation requirements and soil moisture balance simulations, and also in the assessment of production under rain-fed conditions or deficit irrigation.

2. **Research Models:** CROPWAT, CERES-Wheat, CERES-Maize, AFRCWheat

CERES-Wheat and CERES-Maize are included in a Decision Support System for Agrotechnology Transfer (DSSAT). These models simulate crop growth, development

and yield formation, and are used for research purposes such as: climate variability/ change impact assessment on agricultural crops, application of medium and long-range weather forecasts in combination with agro-meteorological models to estimate and forecast soil moisture deficit and crop yield, etc. Generally, these dynamic models requires as input: daily climatic data (minimum and maximum air temperature, relative air humidity, rainfall, net radiation or sunshine duration and wind speed), crop and soil data.

3. Soil Moisture Models

MDA Federal, formerly Earth Satellite Corporation, has been calculating soil moisture values for agricultural areas around the world since 1970. The CropCast crop model runs on a daily basis. The model combines the physiological modeling and statistical modeling to provide crop forecasting system. The model is designed to run at various resolutions ranging from 1 km to 48 km. CropCast currently has three main subsystems, and environmental diagnostic model, a soil moisture budget and a yield forecasting system. The CropCast model has been operational for over 20 years in Europe. It is currently run for maize and wheat in Romania. The model has shown to have yield forecast accuracies of 5-8% two months before harvest.

The model provides soil moisture conditions for both topsoil and subsoil moisture. The yield subsystem provides maximum potential crop yield, crop yield loss to date and expected end-of-year yield. The yield loss subsystem contains features that allow for integration of remote sensing data for extreme events. Because of costs of the data, remote sensing is only used in targeted areas to ascertain extreme risks when they are available. The entire CropCast modeling system is designed for seamless use in a GIS. All output files can be provided in shape files. Examples of output are rainfall, evapotranspiration, soil moisture, and crop condition and yield loss.

The CropCast environmental model subsystem contains a feature that allows for integration of various weather sources, as well as radar and satellite data if available.

MDA is willing to offer their existing model for use and subsequent modification by RNMA. In this scenario, RNMA would run CropCast at their convenience and modify model output to meet the precise needs of the agro-meteorological function. MDA has tied this information into a DSS application which can be viewed at:

http://www.earthsat.com/misc/frdss/index_mapping.html

MDA represents one of only a few agricultural modeling solutions that are commercially supported. Most of the modeling and DSS solutions are developed and maintained within the academia within Universities specializing in agriculture. The main issue with the MDA solution is that it has been developed to run over a vast area, and to meet the needs of the agricultural and agro-political interest groups in mind. Quite often when an application is built to meet the needs of many, the special needs of any one entity are not specifically well addressed.

It is clear that any off-the-shelf agro-meteorological model or DSS would need to be modified gain the most effective solution for RNMA and the agricultural producers in Romania. It is strongly recommended that the needs of the producer be clearly understood prior to investing in a solution. An interview process between the researcher and the producer would help define the basis of the expectations of agricultural modeling, and specifically the rules to be defined within a DSS. In other words, the approach suggested for RNMA would be to build an agricultural decision support function that will specifically address issues important to the producers in Romania.

MDA provides an acceptable system to start with that generally meets the requirements set forth in ISS-AGRO. Modifications to CropCast to take advantage of the RNMA monitoring network will certainly enhance the effectiveness of the model. Of course an accurate prediction of long range climate conditions will enhance the usefulness of the information for producers that are trying to decide which crops to grow, and when to plant crops. More research and a research plan should be engaged to ascertain gains from long range climate forecasting, especially related to water conditions.

F. Database Management

The Romanian subconsultant for database and data management, WinDigita, coordinated with RNMA over a period of many months in 2005 and 2006 to assess the data being generated by RNMA operations, and the current methods of data storage and processing (TOR Task 1), and the expectations of RNMA for the future course of the agency.

This Feasibility Study, and the resulting INTEROPERATE project, are intended to form a core element of Romania's National Crisis Management System, and to select a database system that fully supports this intent. The information on existing meteorological data management gathered as described above will be used to develop designs that will integrate with and extend the existing SIMIN infrastructure and data transfer facility (TOR Task 2), and will provide the RNMA with an optimal data storage facility capable of integrating data from SIMIN, DESWAT and WATMAN into a unified database system (Task 3B of the TOR).

The information developed in cooperation with RNMA has been integrated into the report "Interoperate Project Feasibility Study of Relational Database Management Systems for the Romanian National Meteorological Administration." That report begins on the following page.

The report provides the technical performance required in the preceding sections, and identifies specific equipment meeting RNMA's needs. Equipment from other manufacturers meeting these identified needs may be equally acceptable to RNMA.

Feasibility Study of Relational Database Management Systems for Romanian National Meteorological Administration

Burgess & Niple, Inc. and WinDigita

INTEROPERATE PROJECT

SUMMARY

I. Introduction 24
II. Description and inventory of the existing system 24
III.A. Objectives of the existing systems 24
III.B. Overall architecture of the existing system 25
III.C. Inventory of the existing system 31
III.C.1. Types of Data 31
III.C.2. Hardware and Software Inventory 33
III.C.3. HR Inventory 34
III.D. Existing data exchange channels and protocols 34
III.D.1. Internal Data Flows 34
III.D.2. External Data Flows 36
III. RDBMS requirements and needs 39
IV.A. Architectural and functional requirements 39
IV.B. HR Requirements 42
IV.C. Development/Programmatic requirements 42
IV.D. Administrative/Operational requirements 43
IV.E. Integration requirements with currently developing projects 45
IV.F. Licensing and Pricing considerations 49
IV.G. Cross-Platform considerations 55
IV. Proposed system and future recommendations 57
V.A. Proposed System Architecture 58
V.B. Envisioning of the new data exchange mechanisms 59
V.C. Hardware needs 62
V.D. Software needs 64
V.E. New HR allocation 66
V. Conclusions 66
ANNEX A – Minimal and Recommended Hardware configurations 68
Minimal Configuration 68
Recommended configuration 72

I. Introduction

RNMA have done a lot in terms of database services strategy, during past projects. Main idea around database storage in this *momentum* is to strengthen the HQ capabilities in terms of *operational data storage services*. There is a need of establishing a common format, a *schema*, to which every data producer and/or consumer should or must adhere. Describing such a schema is determining the data about data, the so called *metadata*. Starting with this premises, we can envision, at least for HQ location, at the national level, the "*Romanian Operational Meteorological Database*" (ROMDB) as the main tool for achieving operational proficiency from perspective of essential services like data acquisition, storage, management (optimization, scalability, retrieval, security, etc.) and flow;

In this document we will cover important issues like current capabilities, current and future forecasted needs and requirements, as well as the new proposed architecture for ROMDB;

II. Description and Inventory of the Existing System

In this section we will try to compile an inventory of the existing system inside RNMA and to provide our understanding of the functional aspect of it. In this section we will try to compile an inventory of the existing system inside RNMA and to provide our understanding of the functional aspect of it.

The present situation was achieved by means of the SIMIN (*National Integrated Meteorological System)* project which addressed Romania's primary objective of modernizing and integrating the nations various resources and real-time detection capabilities, and also facilitates the exchange of data at the Local, Regional, and Global levels.

III.A. Objectives of the Existing Systems

In order to have a clear idea about the existing system we should understand the objectives and reasoning of it, at the time. So, the SIMIN system was thought to:

- Modernize and Integrate Meteorological Surveillance Sensors
  - Radar Systems (S and C band)
  - Lightning Detection Network

- Satellite – Meteosat 7 & MSG
- Automated Weather Stations
- Hydro-Met Buoy Observations
- Legacy sensor data
- WMO data.

- Enhance National and Regional (local) Forecaster's Decision Support Systems Integrated Real Time Sensor information

  - NWP Mesoscale Models - ALADIN and MM5
  - Forecasting and Nowcasting tools.

- Upgrade Communication Infrastructure
  - National / Regional – VSAT
  - SIMINcast - Broadcast (VSAT) of data to all Regional Forecast Centers
  - Surface Observation collection – GSM/SMS
  - Subscribers – Dedicated Lines and PSTN.

Improve the Dissemination of Forecasts, Warnings and Alerts to Agencies and the Public.

III.B. **Overall Architecture of the Existing System**

The SIMIN system is a distributed architecture with one national center, connected to multiple regional sites. It supports all types of users, with a suite of tools dependent on the operational need of each user. The Figure 1 illustrates the top level SIMIN architecture.

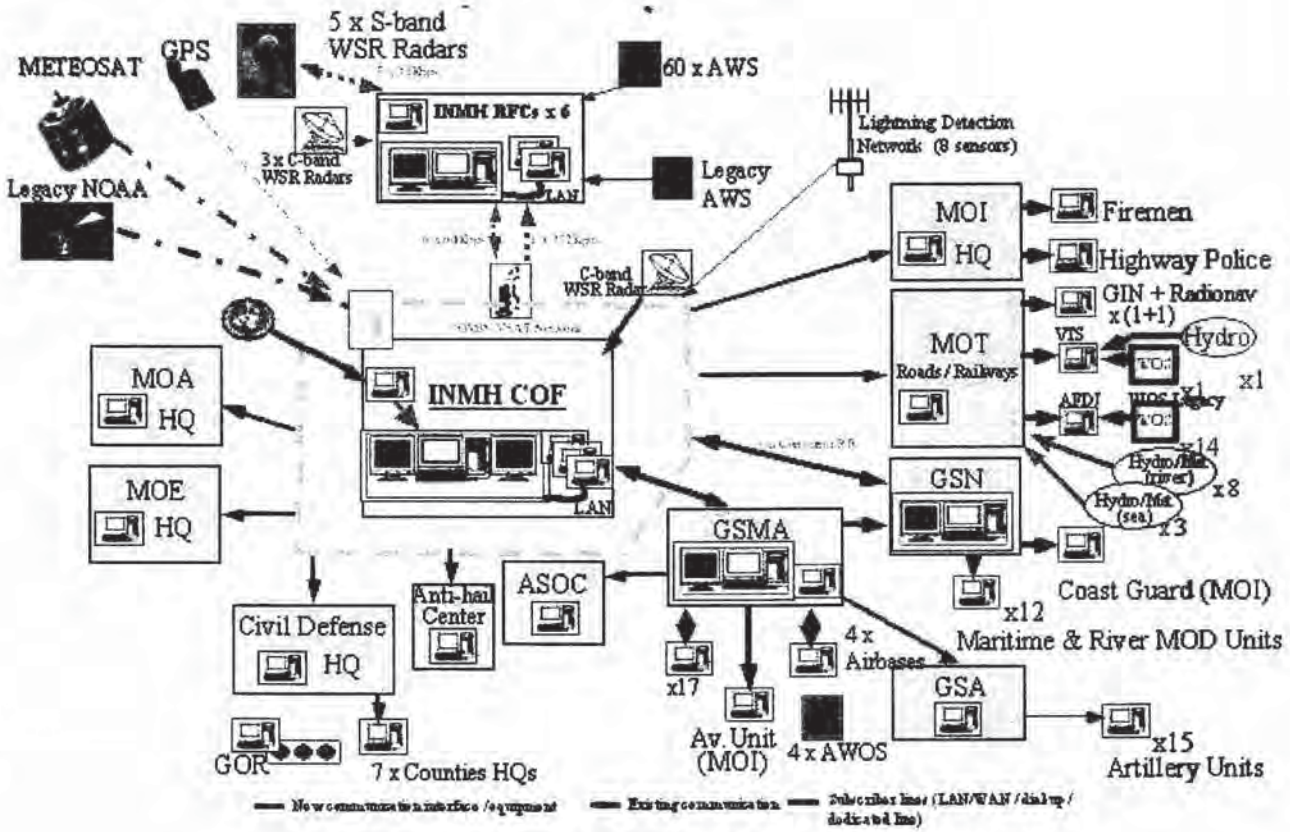

Figure 1 Top-Level SIMIN Architecture

Figure 2 is showing the primary forecasting sites (including the Central Operations Facilities – COF and Regional Forecast Centers -RFC and observation system providing the necessary data for RNMA to fulfill its tasks.

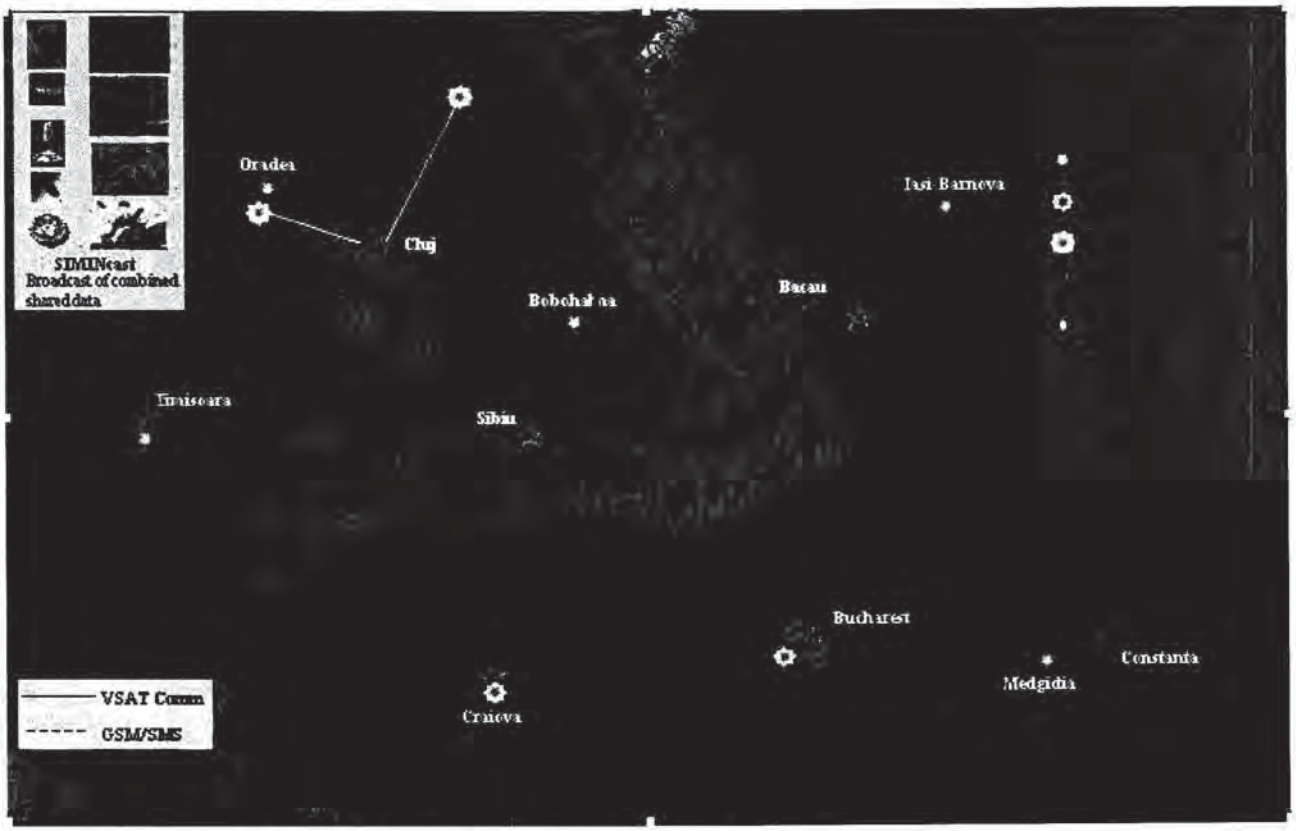

Figure 2 Primary forecasting centers and observation system

The observation system is shortly described in the following pages:

1. Surface Observation Network

From the beginning is necessary to mention that the Romanian surface observation network is a hibrid one, containing both automated and manual stations.

Surface Observation Processing (SOP) supports collection, validation, and distribution of all surface observations in the country. SOP is involving three levels of processing sites: local, regional and central.

SOP Local Site

When there is an automated station the Local Site SOP application (SOP-LS) retrieves raw measured data and derived data calculated in the station, for further processing, decoding, local display,

and archiving. Messages are generated from the measured parameters and supplemented with human observations, then automatically sent to the Regional Collecting Center using GSM/SMS text messaging technology. The SOP-LS supports automated stations like Vaisala MAWS 301 and 201 stations, Vaisala MILOS 500, Thies AWS 7800, and Thies DL 15. From the manual stations, messages are entered by the observer into a mobile phone, and sent as GMS/SMS text messages to the Regional Center.

SOP Regional Collection

The Regional Collection SOP application (SOP-RC) collects hydro-meteorological messages sent from all automated and manual observation stations assigned to the Regional Center. It supports manual data editing and validation of the received data and generates collective messages of multiple stations in standard formats, according to WMO regulations and national practices. All data are decoded and stored in the local database, allowing the display in alphanumeric and graphic format. Messages (grouped into a single collective product) are automatically sent to the National Center via the SIMIN Communications WAN.

There are 7 regional collecting centers (located in Sibiu, Bacau, Cluj, Timisoara, Craiova, Bucuresti, and Constanta) corresponding to the Regioan Forecasting Centers.

The regional collection center SOP application hereafter referred to as SOP-RC, was installed at the seven (7) collection centers. Six are at RNMA RFCs and one at the Muntenia Center. The regional collection center SOP receives the surface observations from the local SOP applications assigned to that center, validates the data against regional criteria, and formats the data into a single collective product according to the interface defined herein and exchanged with the IRNMS for distribution throughout the SIMIN system.

SOP National Collection

The National Collection Center SOP application (SOP-NC) supports all required capabilities of the SOP-LS and SOP-RC applications, with additional features to support national operational responsibilities. It is part of Central Operations Facility (COF) in Bucharest.

2. Radar Network

Radar network encompasses five WSR-98D S-band radars and four (4) C-band radars (2 from EEC and 2 from Gematronik. Data from the C-band radars is converted to 88D/98D formats, to facilitate integration with all applications in the system.

The following table summarizes the physical components of the radar network:

Site ID	City	County	Lat / Lon	Elev(m)	Equipment type
RDIS	Barnova	Iasi	47.167 / 27.633	102	WSR-98D S-band (2912MH
RDMD	Medgidia	Constanta	44.250 / 28.267	64	WSR-98D S-band (2965MH
RDBB	Bobohalma	Mures	46.360 / 24.225	523	WSR-98D S-band (2945MH
RDTM	Timisoara	Timis	44.311 / 23.868	85.5	WSR-98D S-band (2935MH
RDOD	Oradea	Bihor	47.033 / 21.900	136	WSR-98D S-band (2965MH
RDBU	Bucuresti	-	44. 511 / 26.079	90	Legacy C-band EEC
RDCV	Craiova	Dolj	44.311 / 23.868	192	Legacy C-band EEC
RDOR	Oradea	Bihor	47.092 / 21.943	249	Legacy C-band Gematronik
RDBM*	Baia Mare	Maramures	47.731 / 23.673	1307	Legacy C-band Gematronik

*) Operational since 2004, but still does not send data in national radar network

There are applications, on every radar site, that build radar products from raw data. The archiving of these products is done at every Regional Meteorological Center (for own radar and for 1-2 neighbor radars) and at RNMA HQ (for every radar). Exceptionally, on demand of every Regional Meteorological Center, raw data are archived too, on site. Through VPN (Virtual Private Network) subsets of radar products are transmitted at Bucharest (RNMA HQs). For more information on this please consult "Data Inventory" document, accompanying this deliverable.

Figure 2 Radar National Coverage in Romania

The 8 operational radars contribute with data for national radar mosaic which is generated every 10 minutes at RNMA HQs. National radar mosaic is available in 3 types of products: first elevation reflectivity, echotop and maximum reflectivity on column. RNMA has allocated one server for national mosaic and integration software which uses spatial and temporal criteria for radar data selection.

In addition, Romania has the hardware and software capacity of incorporating the radar data from EEC and GEMATRONIK equipments in national radar mosaic.

3. Satellite Receiving System

RNMA is receiving in real time manner numerical data and images transmitted by geostationary meteorological satellites (MSG1 – first METEOSAT of the second generation; METEOSAT-7), NOAA/AVHRR and EPS satellites. RNMA performs primary transformations on data and stores it.

4. Lightning Detection Network (LDN)

The network is formed by eight SAFIR 3000 sensors providing national coverage at approximately 1Km accuracy, for both cloud-to-cloud and cloud-to-ground lightning. The information received from the LDN is distributed throughout the system in near real-time to support integrated forecast operations.

The network is able to efficiently detect storm cells and supply precise information about trajectories and warnings of imminent risks of storms with electrical discharges. Lightening information is integrated with radar products being the base of immediate and very short term forecasts for severe phenomena associated with profound convection (intense rains, hail, wind intensification, electrical discharges). Several researches are made in regard with phenomenal analysis of thunders, of electrical structures and mechanisms associated with connecting clouds and adaptation of network parameters to particular meteorological conditions in Romania. The methodology of electrical discharges forecast is still in development.

5. Romanian Upper-Air Network

It consists of three operational radiosonding stations located at Bucharest, Cluj-Napoca and Constanta. All the three stations are equipped with DigiCORA systems upgraded during year 2004 to Loran C for using RS-92 KL sondes and, alternatively, Vaisala GPS sondes RS-92 SGP.

III.C. Inventory of the Existing System

We will identify the existing types of data, available hardware, software and human resources in terms of the database services. Based on these inventories (coupled with initial and current objectives) of the system we will determine then the requirements for the futureproposed system.

III.C.1. Types of Data

Essentially inside an organization we can subdivide the data in two main categories:

- Unstructured data
- Structured data

There are several categories of unstructured data: Electronic Documents, Emails, Intranets and Extranets; There is no coherent policy of the management of unstructured data and is beyond this document's scope to address this issue;

In our discussions with ANM staff we were informed about **different types of structured data**:

1. **"National Surface" Observation Data (NSOD)**, collected at the Regional Centers from observation stations and stored in MS Access databases and used by the SOP applications (data is stored for the last 90 days). At the Regional Center data files are transferred to Bucharest through the Communication Gateway, stored in MS SQL Server and then stored in the Oracle "Climatological" database (~ data for 800 parameters is stored). Every month data is moved from the "operational" database to the historical one. This data is logically divided into 2 groups:

   - *Rapid flow data* – regular sensor data and some calculated data based on it. The client application is doing this calculation and there is also a Java application, which is filtering data for exporting purposes;

   - *Slow flow data* – manually entered data, additional data from observation stations l undr the responsabilty of the Regional meteorological Offices, monthly and annually reports.

2. **"Vertical Atmospheric Data Profiles"** collected from radio-sounding stations. From data catalog one may know exactly where the TEMP and PILOT files are stored on a machine owned by AEROLOGY Department.

3. **Radar** – this data is not stored in any database, there is a need to capture data from NEXRAD format, transform and store in some kind of database in order to be used.

4. **Satellite** – RNMA receive in real time manner numerical data and images transmitted by geostationary meteorological satellites (MSG1 – first METEOSAT of the second generation; METEOSAT-7), NOAA/AVHRR satellites and EPS satellites. RNMA performs primary transformations on data and store it. It's important to mention that this kind of data is not stored in any database.

5. **National Network of Electrical Discharges (SAFIR)** – International surface and upper air data is stored in a collection of files in alphanumeric format. It worth to mention that is a need of storing them in an organized database, in BUFR format.

6. **Models Output** – All the output of the models is partially stored on DVDs or CDs. RNMA personnel of every department consume time with this activity (burning the media, labeling and archiving the DVDs/CDs).

7. **GIS Data** – the existing GIS layouts are categorized on interests fields, represented on several scales (1:5000, 1:25000, 1:50000), containing diverse information (hydrological network, road network, railways network, cities, use/covering of lands/fields, hidrotechnical contructions, numerical model of lands/fields). The storage of information (e.g. shapefiles) is on CDs. The format of GIS data is ESRI specific (ArcGIS v9.1). Current licenses of RNMA for GIS package do not permit access to meteorological parameters stored in RDBMSes.

All the modeling applications used in ANM are using more or less the types of data listed above, doing data transformation operations, initial state data importing and results data exporting. These operations are done in each specific departments of ANM based on what models are using, and in some cases data is exchanged in between departments. There is also a DOS based data storage system called CLICOM which is not integrated with the Oracle database.

For a complete and detailed inventory of the data inside RNMA please consult the EXCEL file (Data inventory for Operational Meteorological Database.XLS).

III.C.2. Hardware and Software Inventory

In terms of database services RNMA owns following hardware running appropriate software:

- 1 Oracle 8i Standard Edition
- 2 Microsoft SQL Server 2000 – Standard Edition
- 14 MS Access

Hardware

- Oracle Database Server is a COMPAQ PROLIANT ML 570 Server with 2 x Intel Pentium III Xeon 900 MHz Processors, 2 MB Level 2 writeback cache per

processor, 2 x 1GB SDRAM DIMM, 5 x 36.4 GB Pluggable Ultra3 SCSI 15K rpm Universal Hard Drive, DLT 40/80 GB Tape Drive Internal Carbon.

- 2 SQL Server 2000 – 4 CPU 3.0 GHz, 1Gb RAM, 80Gb HDD.
- 14 RFC PCs – 4 CPU 2.8 GHz, 256 Mb RAM, 80 Gb HDD.

III.C.3. **HR Inventory**

In present RNMA database related staff is composed by:

- Oracle DBA to National Center.

III.D. **Existing Data Exchange Channels and Protocols**

III.D.1. **Internal Data Flows**

Existing system sends data from the surface observation stations to the Regional Center (ACCESS database) by automated GSM modem or by manual GSM phone. Data moves on to the National Climatological Database (with a SQL server and an Oracle database) which is now used for permanent storage of data.

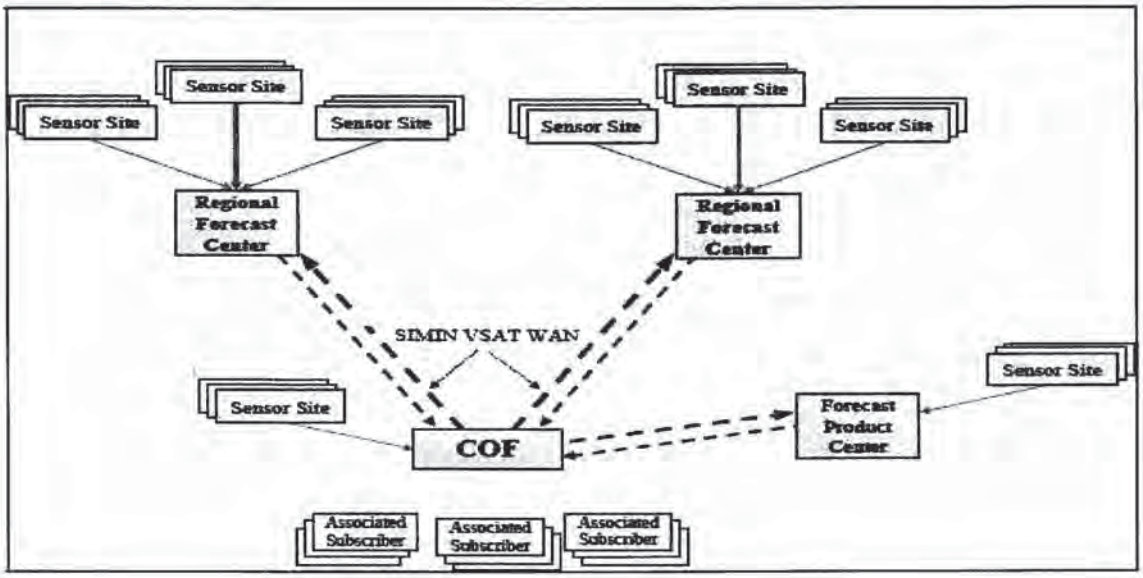

RNMA considers a new operational database essential for storing and using national and international surface, upper air, radar, satellite data, t models output etc. New models and existing models would be provided with data from this database. The sketch below indicated the relationship of the items noted above.

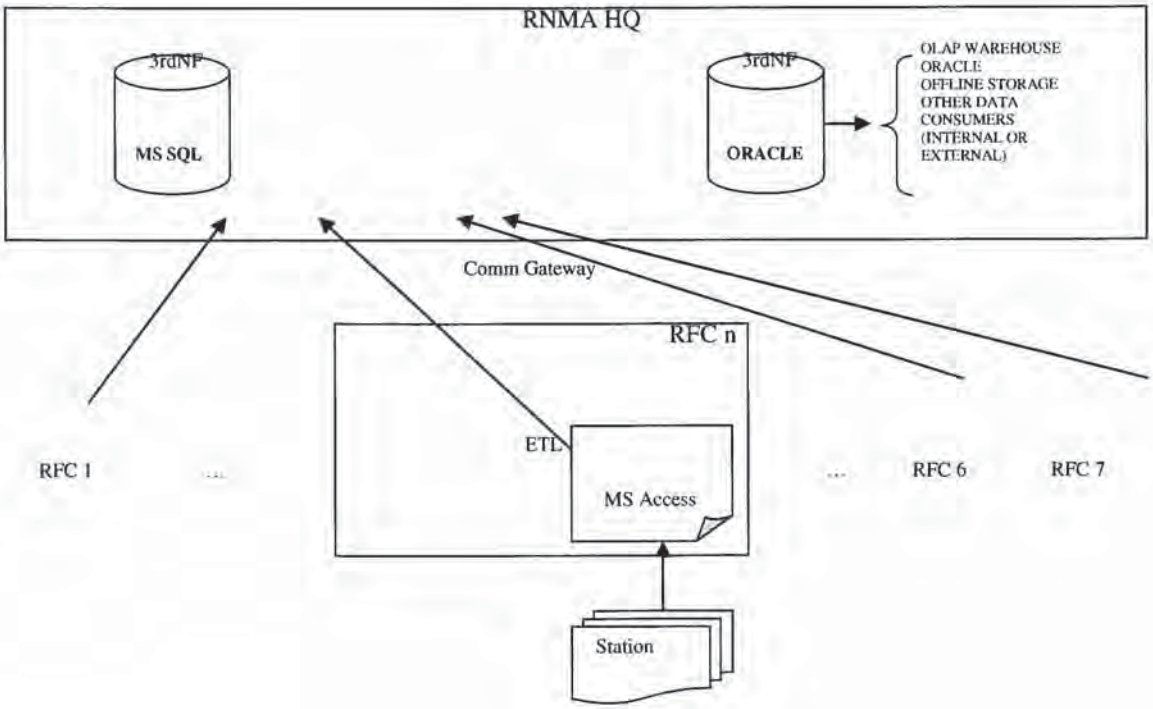

Need to integrate the (old) CLICOM /DOS with the existing Oracle database at least temporarily. CLICOM uses historical data from Oracle Database (now, the same data exist in the both systems) and there may be reasons to keep using a modified CLICOM.

A major question is how to store and use the radar data. (The data format for DESWAT is yet undetermined). Also, the use of satellite data and its storage must be considered.

INTEROPERATE needs to provide a data warehouse with hardware, software, and human capability improvements.

III.D.2. **External Data Flows**

1. As a member of WMO (World Meteorological Organization), RNMA exchanges observation and forecast data within GTS (Global Telecommunication System), in alphanumeric codes and binary standard format.

International flow of data: RNMA receive following types of meteorological message: Synop (8 /day), Temp, Metar, Amdar, Climat Synop(1/month), Climat TEMP(1/month), AFTN messages , ECMWF Gribs, LFPW Gribs, T4 Charts, BUFR data.

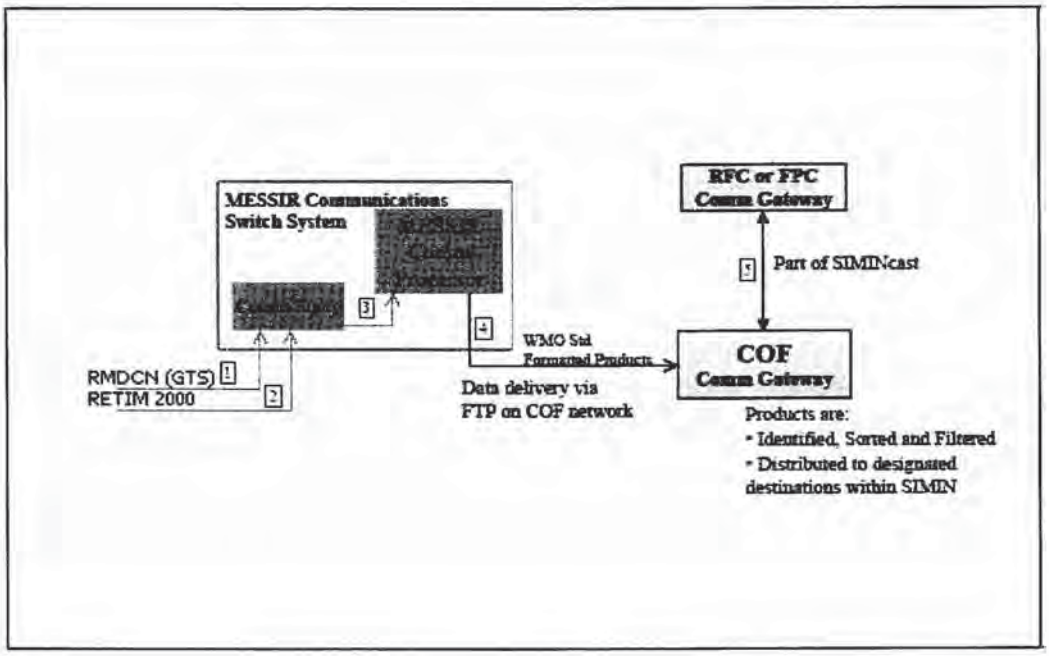

2. Data received from ECMWF through RMDCN are distribute to Comm Gateway and to other PCs3. Data received from different external organizations in order to assure initial and boundary data for limited area numerical weather prediction models integrated locally (via ftp)

- Meteo France (France): data from the global model ARPEGE , input for ALADIN model.

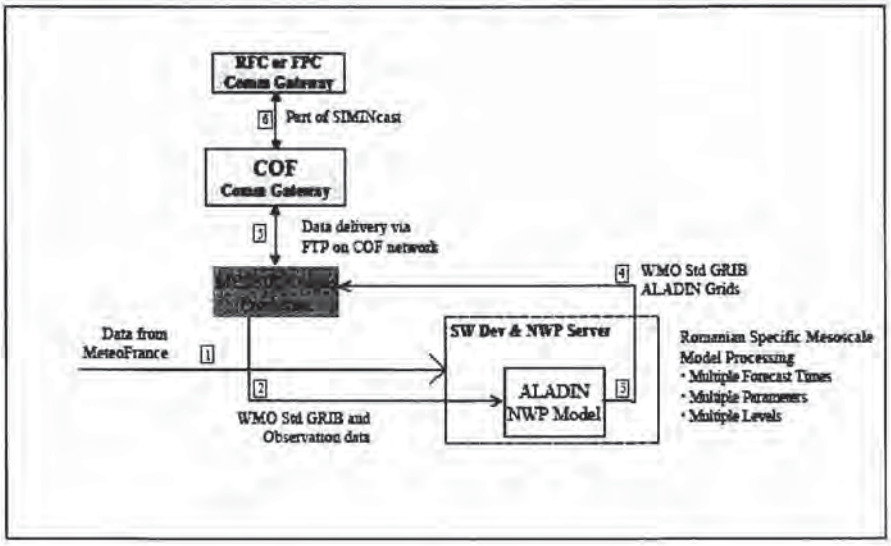

- Deutscher Wetterdienst (Germany): data from GME , input for HRM and LM models

- National Centers for Environmental Prediction (USA) : data from GFS- Global Forecasting System (, input for MM5 model and transmitted to visualization systems as well.

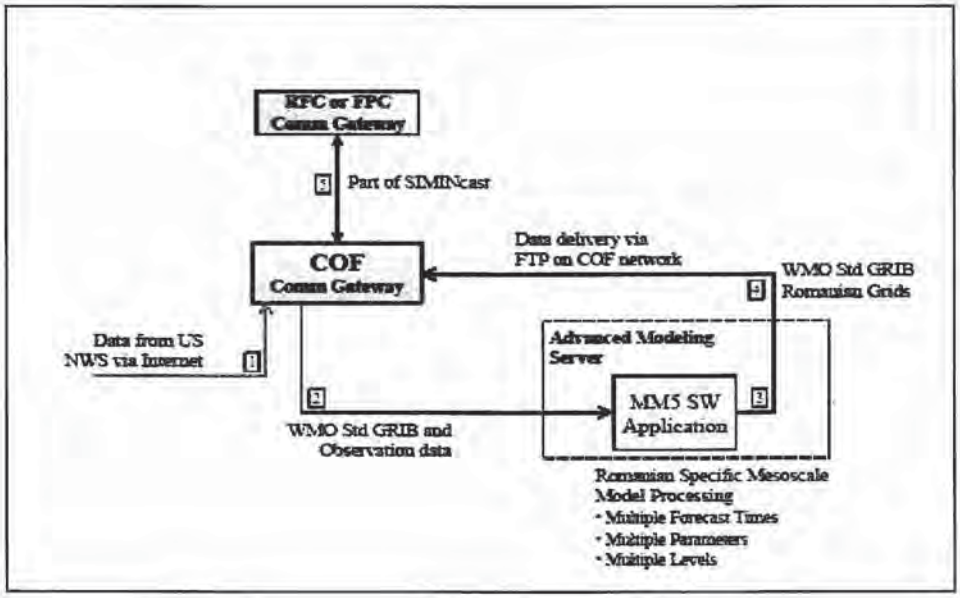

For more information see the Excel file with data inventory.

III. RDBMS Requirements and Needs

We split the requirements in different categories: architectural, human resrouces, development / programmatic, administrative / operational and integration; Based on these requirements we will determine the proposed system and future recommendations;

IV.A. Architectural and Functional Requirements

RNMA is a complex organization. It has several locations hierarchically disposed, heterogeneous IT systems (hard and software-wise) and limited staff for management (administering, auditing, monitoring, disaster recovery) of the system. The chosen RDBMS must meet following categories of architectural and functional requirements:

- ***3rd Normal Form*** – Inside available data sources we were more than surprised about that fact that the ERD (Entity Relationship Diagrams) are not at the 3rd level of normal form (3rdNF). We strongly recommend redesign and remodeling of all "databases" into at least 3rdNF flavor, to ease the migration to the new RDBMS; If it is not possible the redesign of the existing databases and applications, we strongly recommend the future RDBMS to contain 3NF ERD integrated with the old one (see "Integration") bellow.

- ***2 PC Transaction and Concurrency*** – It's very important to understand that a true database solution must adhere to the 2PC (2 phase commit) principle. 2PC is the very easy way of differentiating the files that stores data (MS Access, Excel, FoxPro, dumb text/binary files, etc.) from true databases (MS SQL Server. Oracle, IBM DB2). Basically the transactions are first „logged" into a log file and then are entirely „committed" into the storage file itself or completely "rolled back". As we know, a transaction must succeed or fail 100%, there is not middle way; If there is a fault (e.g. power outage, hard drive fault) inside (say after A3) a chain of transactions (A1, A2, …, A10) that compose a bigger transaction (A), the "logged" transactions (A1, A2, A3) must be "rolled back" and therefore the bigger transaction (A) fail entirely. The concurrency of database transactions must meet the ACID criteria: Atomicity, Consistency, Isolation and Durability; It's beyond the scope

of this document to insist more on the "transaction philosophy" in database world, but as a conclusion: only 2PC system have the chance to be considered ACID compliant;

- ***GIS Capable*** – Existing geodata should be ported to a RDBMS-based GIS system. The GIS package (ESRI) must support the chosen RDBMS. The new GIS system should permit, on one hand, operative access to the new ROMDB, and on the other hand, the migration of the existing layouts (shapefiles for ArcGIS 9.1) into the RDBMS. For this is necessary the acquiring of new licenses for the new GIS package (e.g. ArcSDE) too.

- ***Auto Manageability*** – The RDBMS should auto-tune in order to reduce the manual tuning. It's a proven fact that the DBAs do not tune the RDBMSes as good as internal auto-tune engines; Of course there will still be some manual operations, but minimal.

- ***Scalability*** – RNMA will evolve to a more and more demand regarding the needs of data storage space, speed of access to the data, ways of processing this data and so on. The proposed system will provide a way of supporting these natural increasing of demands vertically and horizontally. Vertical scalability is the ability of a system to scale by upgrading the physical machine by adding more processors, more memory and more hard disks (also named scale-in). Horizontal scalability (also named scale out) is when the system is formed by many servers (nodes) that act as one (cluster). The recommendation is to choose an RDBMS that supports both 32bit and 64bit iron; in this way we can be assured that if the situation imposes so, the database can be easily upgraded from 32bit to 64bit machines. Also we add here the need for asynchronous messaging and support for notifications based on a specific event; without these features it is hard to manage to growing of databases in a consistent manner.

- ***Agility*** – The RDBMS should support changes without disrupting the activity of RNMA. Backup and restore operations, as well as, every other operation on the databases should all happen "on line." The configuration parameters should be changed without restarting the services. Upgrades, installation of patches should impact at a minimal level the uptime of the RDBMS.

- ***Interoperability*** – Given the heterogeneous character (from IT point of view) of every research environment center, it's highly recommended that the RDBMS will interoperate

with as many as possible technologies and platforms as possible; The data exchange should happen without considerable amount of effort; This feature should be built in the cost of the RDBMS "box."

- ***Integration*** – Often confused with interoperability, integration is the ability of a system to be incorporated or "glued" with existing one without disrupting the operations inside RNMA. There are several approaches on the market based on EAI (Enterprise Application integration) or EDI (Enterprise Data Integration).

- ***Data Analysis*** – The business intelligence component it's very important for RNMA. The future RDBMS must provide a powerful engine for BI and multidimensional storage structures, plus a powerful multidimensional query language;

- ***Performance*** – The system must meet the performance needs of RNMA in terms of data access speed (transactions per minute) and cost/transaction (the total cost of the system divided to the number of transaction per minute that system can perform). At the moment the situation is like this: IBM DB2 UDB 8.2 is, by far, the most performant RDBMS under Windows OS (~3.200.000 tpmC) but MS SQL Server 2005 Standard Edition has the best price/transaction (0.99 $/transaction). There are many benchmarks: TPC-C (concurrent transactions), TPC-App (for business-to-business applications) and TPC-H (for decision support systems). The most important, in our case, is TPC-C. For a complete and up-to-date situation of this classification please visit www.tpc.org site (Transaction Processing Consortium). These classifications are very volatile; therefore we do not include them here.

- ***High Availability*** – The data layer in every multi-tier system is the most important component. Databases are mission critical IT artifacts, so they need special high availability features The planned and unplanned downtimes must be minimized, in order to keep all the operational processes up ad running inside RNMA;

- ***N-Tier Systems*** – The database is the physical representation of data layer (back-end) in an n-tier system. Other two layers are business logic layer (middleware) and presentation layer (front-end). Existing RNMA applications are exceptional from presentation layer point of view, but lack in the other two layers of the architecture;

- ***Service Oriented Architecture (SOA)*** – This is a new paradigm in the industry that states the obvious fact of the software viewed as a "service"; via services RNMA could interoperate with external entities. We also strongly support the implementation in a SOA manner for RNMA's internal department too;

IV.B. HR Requirements

RNMA must hire or outsource appropriate staff in order to keep RDBMS up and running with as many 9s as possible (99.999… %). In every location where an RDBMS exists, there should be hired a DBA (Database Administrator). We recommend that the newly hired persons pose at least one ***industry recognized official certification*** on RDBMSes available on the market (e.g. Microsoft Certified DBA – MCDBA, Oracle DBA).

The staff should attend ***periodical training*** in form of instructor-led classes, self-paced courses, books, workshops and conferences, in order to keep or improve the level of competency in regards with the running RDBMS. The amount of training time is 10-15% of the total available working time (excluding holidays and vacancies);

We encourage the organization of ***periodical internal meetings*** with every DBA on RNMA. These consultative off-line activities are good occasions of building the team, discussing the hot issues and solving the main problems that involve usually a collective and unanimous decision;

IV.C. Development/Programmatic Requirements

RDBMS must provide a very strong development platform in order to improve and innovate the ways the data is used. In today's world every RDBMS have already an ANSI-SQL compliant dialect, but we refer here to other types of programming languages, like OOP (Object Oriented Programming) languages; It's best to have incorporated inside database engine at least one runtime of a major language running ***in-process*** as opposed to out of-process ones. In-process has the advantage of speed because the communication between hosting RDBMS and hosted runtime shares the same memory address space.

Most of the times when a RDBMS is acquired the future owner does not take into account the available ***compatible development tools***. The development tools are very important in order to shorten the

time-to-market of the new RNMA "products". This is the reason why we consider the existence of development tools crucial in evaluation of which RDBMS, RNMA should decide.

The development Environment should include a RAD (***Rapid Application Development***) tool that covers all the stages of developing a solution (code editing, debugging, building and deploying);

IV.D. Administrative/Operational Requirements

To solve the integration between different data producers and data consumers is necessary to create an integrated, unified, data storage system containing all the data collected/used/produced in ANM, in order to support operational tasks inside the organization.
This **central data storage system** will be logically composed by two main components:

1. **Online transaction processing** (***OLTP***) system for day-by-day data collection/ operations.

   Transactions are those simple ACID (Atomic, Consistent, Isolated and Durable) operations that are composed, in part, by DML (Data Manipulation Language) instructions (e.g. SELECT, INSERT, UPDATES, DELETE) and, in part, by the logic of it (essentially "IF"s and "LOOP"s), that either succeed at all (COMMIT), or fail entirely (ROLLBACK); This OLTP system's principal aim is to handle very fast (seconds) and easy, as many as possible simultaneous "transactions";

   The amount of data manipulated in one request is, usually, small and received responses from the CDSS are considerable small in size.

   It is highly expectable that these systems to be very responsive. In this case we refer characteristics like time of response, maximum number of simultaneous currently running transactions and cost per transaction.

   In this kind of data store, actual data will be stored in a relational way.

   It doesn't have any sense to store old data, obsolete information in this place.

2. **Data Warehousing and Online Analytical Processing (*OLAP*)** system for historical data analyses and processing. An important clarification here is that we do not store the binary data here (BUFR, GRIB, etc.), but the extracted numerical data for time series of every parameter contained in binary files. We can imagine multidimensional data structures based on time, place and height for example.

The OLAP system's principal aim is to store and manage pre-aggregated historical data available for complex queries, like multi dimensional queries (a.k.a. cubes), in order to cover a vast majority of possible interrogations, on historical data, in a reasonable amount of time (couple of minutes) and spending a reasonable amount of space on storing media (e.g. hard-drives).

In this kind of request/response sequence, huge amount of data is queried and processed.

It is highly expectable that these systems to be able to answer most complex types of queries based on various combination of dimensions of the cubes.

This data warehouse is storing historical data in a multidimensional way.

It makes sense to move here the actual data, as it becomes "obsolete", for archiving and analyses purposes, freeing up the OLTP part of CDSS.

From here we can deduct that we need, on one hand, a way of determining what cubes we need, and, on the other hand, a mechanism to populate the cubes with old-became data, - mechanism having several names: "data transformation", "data warehousing feeding", "data integration services" etc.).

Designing a cube consists, basically, on identifying the required dimensions (e.g. time, regions, etc) and the scale of each (e.g. daily, monthly, yearly, and respectively countries, counties, towns etc.);

Establishing a data warehouse population strategy involves, among other things, - preparing brute data from several sources for import into the data warehouse, - homogenize the prepared data by making it comparable, regardless on which is the source

of the data,- and determining the schedule and channels for sending the data to the warehouse.

The **unified database (UD)** will store all the data collected from the sources mentioned above and also from other institutions. In order to store all different types of data it is necessary to be designed a general **(universal) data structure (UDS)** which will allow the warehousing of heterogeneous data types and structures.

All the data introduced in this data warehouse will be "converted" to the UDS, and available for the use of any interested "database consumers". In this way any data consumer will have the collect data for one place and in one format.

The **conversion tools** have to be developed for all different types of applications to be "plugged in" in the UD as "producers" and/or "consumers". All the plugged in components have to be listed, analyzed and the conversion tools have to be developed or acquired.

Support and upgrading policy of the RDBMS producer has a major impact in RNMA's operations and budgets. The recommendation here is to choose a producer that provides minor upgrades and service packs free of charge in a public channel (e.g. download);

Security issues are discovered all times after a software product is launched. This is the case for every RDBMS producer. Critical updates or **security patches** for the software are released as soon as possible in order to fix those security breaches. These updates are usually provided for free.

IV.E. Integration Requirements with Currently Developing Projects

We have identified following major stakeholders in environment marketplace:

- Ministries:
  - Ministry Of Environment and Water Management
  - Ministry of Agriculture, Forests and Rural Development

- NAAR – National Administration "Apele Romane" (Romanian Waters)
  - INHGA – National Institute of Hydrology and Water Management
  - NSI – National Institute of Statistics
  - Others.

It is beyond this study to identify all the projects inside these institutions but we mention only the biggest projects in Romania at the moment; There are several major projects that can impact or can be influenced by INTEROPERATE. Following projects have underway developing activities in this field:

- DESWAT
- WATMAN
- NAAR PHARE WINS

The **Destructive Waters (DESWAT)** project, which aims to minimize the socio-economic impact of extreme meteorological events and accidental pollution spills. The project will also facilitate international and regional cooperation through the exchange of hydro meteorological information. DESWAT will develop an interactive weather processing system to ingest and analyze a massive volume of data from various sources (weather station sensors, radars, satellites). The system will quickly interpret this data (running large-scale river forecast models) and generate forecast products. These forecasts will be delivered to the public and external interfaces as required by the Government of Romania. The DESWAT project will use resources and technology being acquired as part of the Romanian National Integrated Meteorological System (SIMIN project). This is a project of the Romanian National Institute of Hydrology and is being carried out by an US company. The DESWAT river flood forecasting models will feature interactive capability to produce rapid issuance and updates of river forecasts.

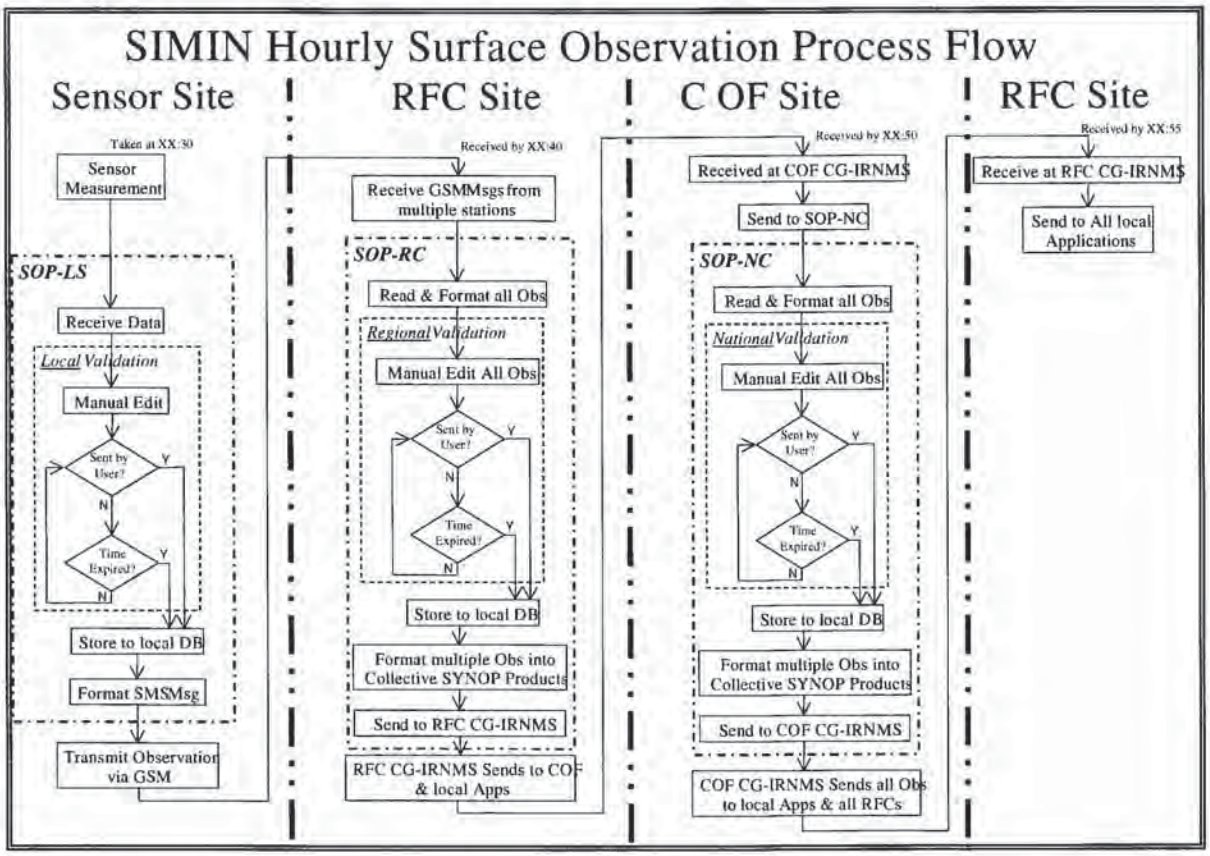

To support the Decision Support System (DSS), a package of forecasting models for the water resource system has to be added, as well as a monitoring and control system (SIMIN and DESWAT) and of the hydro-technical systems (WATMAN task). The integration of the hydrological informational system together with data from different hydro-technical systems will feed procedures (simulation, optimization, expert system, etc.) for DSS in each Romanian basin. The main task of **WATMAN (Waters Management)** is to design the architecture of the DSS and the linkage with other systems. The DSS will benefit from the meteorological forecast models (e.g., Aladin, MM5, etc.) and hydrological forecast models (e.g., NWS package of models, Toplets coupled with MM5, and other EU models), pollutant dispersion models, and optimum water supply models. All these, perhaps, will make use of our project's recommendations concerning data storage and transmission.

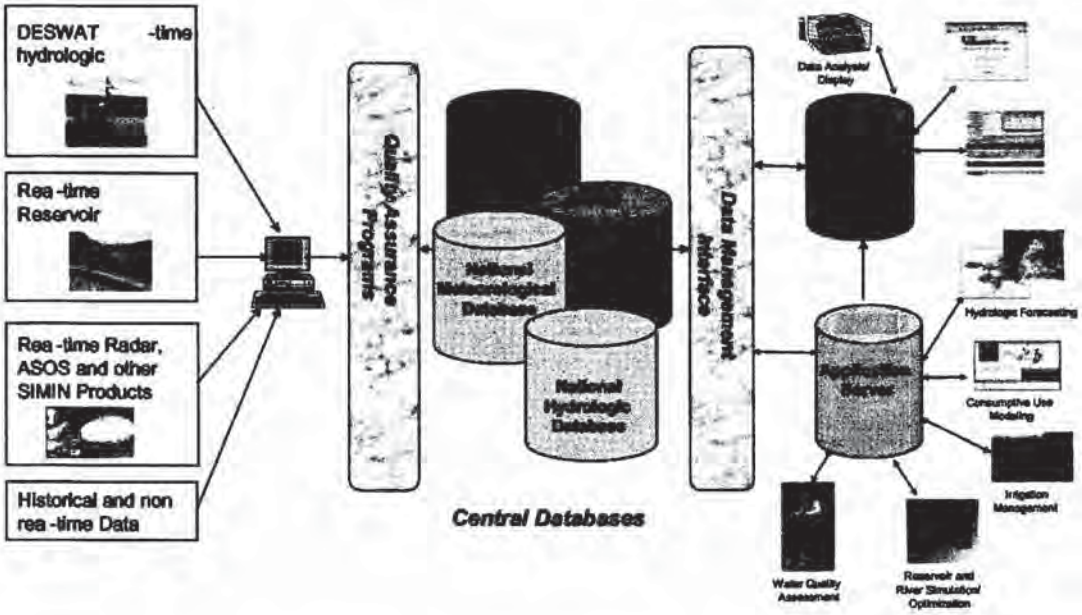

Within WATMAN, a decision support system (DSS) for integrated water management is being designed and implemented to assist in developing WFD's RBMPs and PMs, including:

- International survey of DSS for integrated water management, describing individual models and their respective applications, data requirements (including topographical and cadastral information), use of GIS platforms in data management, analysis or presentation.

- Current applications of DSS in Romania, describing the current computer-assisted applications of DSS for water management in Romania, including data requirements, software tools and outputs, and indicate whether the models are used to support real time decision making or to support research and analytical studies on water management issues.

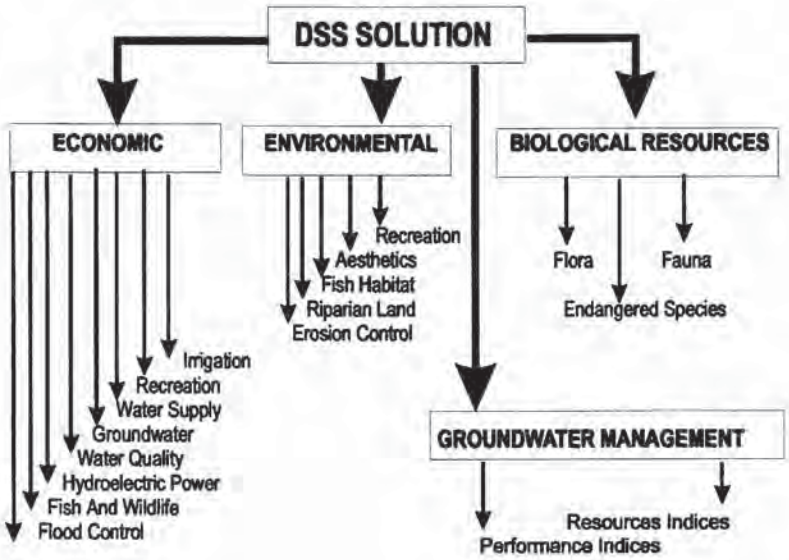

Elaboration of DSS for integrated water management in Romania developing and adapting international models and DSS to Romanian water management problems.

IV.F. Licensing and Pricing Considerations

Understanding the direct and indirect costs of deploying and managing an enterprise database solution allows RNMA to make a more informed decision when considering which database is best for their organization. Knowing all components of the licensing models and the new multicore technology and how these influence the overall cost is a crucial step in understanding database pricing.

RNMA should take into account some licensing and pricing issues:

- **Editions and Add-Ons Costs** – Depending on edition and the number of add-ons included in the box, the cost of the RDBMS increase quite much; usually there are four levels of editions (free, basic, standard and enterprise. In the following table is a comparison of the editions of the top 3 RDBMSes on the market;

Tier	Features	Sample Products	Price
Free	Limited database functionality Memory limits, database size limits, functionality limits	SQL Server Express Edition	$0
Basic	Basic database functionality Simplified Management Tools Basic security Up to 2 CPUs, memory limits	Microsoft SQL Server Workgroup Edition Oracle Standard Edition One DB2 Express Edition	$500–$5,000 per CPU
Standard	Availability Full database functionality Basic management tools Up to 4 CPUs or nodes	Microsoft SQL Server Standard Edition Oracle Standard Edition DB2 Workgroup Edition	$5,000–$15,000 per CPU
Enterprise	High availability Scalability High-end management tools Enterprise security No CPU limit	Microsoft SQL Server Enterprise Edition Oracle Enterprise Edition DB2 Enterprise Server Edition	$25,000–$40,000 per CPU

Note: All prices are per processor and reflect pricing for purchases within the United States and are in United States dollars. Pricing based on information available on vendor Web sites. For Romania, additional discounts may apply.

When it comes to add-ons, usually vendors try to charge the buyer. For RNMA we strongly recommend to choose something that includes at least OLAP, Data Mining and Management Tools add-ons. Following is a comparison table for add-ons.

	Microsoft SQL Server	Oracle	IBM
Enterprise Edition	$24,999	$40,000	$25,000
Management Tools Add-on	Included	$3,000 (Diagnostics Pack) $3,000 (Tuning Pack) $3,000 (Configuration Mgmt Pack) $3,000 (Change Mgmt Pack) Total = $12,000	$9,910 (Recovery Expert) $10,000 (Performance Expert) Total = $19,910
OLAP Server Add-on	Included	$20,000 (OLAP Option)	$28,000 (OLAP Server)
Data Mining Add-on	Included	$20,000 (Data Mining Option)	$60,000 (Intelligent Miner)
Total Cost	**$24,999**	**$92,000**	**$132,910**

Note: All prices are per processor and reflect pricing for purchases within the United States and are in United States dollars. Pricing based on information available on vendor Web sites. For Romania, additional discounts may apply;

- **Per processor vs. per core licensing** – Vendors have different approaches about a core inside a processor. Because of the technological advance, in processor industry we are in situation where inside 1 physical processor there are 2 or more cores.

  Specifically, multicore is a technological innovation that improves database performance. Intel and AMD ship processors with two or more cores starting from 2005. Multicore expands the amount of threads available to an application. As a result of this, modern enterprise usage with concurrent workloads highly benefit from the additional threads. Because leading enterprise operating systems and most applications are ready to support the multithreaded environment, multicore chips deliver performance increases of more than 50 percent. This is yet another way in which Moore's law works to benefit database customers.

  However, the enterprise database industry has widely taken the position that a core is equal to a processor, for per processor licensing models (we don't discuss here per device/per user/per seat licensing model). IBM charges per core (for their RISC line) and Oracle has adopted a policy of charging 0.75 times the number of cores in a system, rounded up to the nearest whole number (e.g. 1 dual-core proc: 0.75 x 2 cores = 1.5, rounded up to 2 for licensing purposes). Microsoft has adopted a multicore licensing policy, in which it continues to reduce enterprise software costs by licensing physical processors, not cores, for Microsoft software licensed on a per processor basis. In other words, licensing requirements for per-processor software will be determined by the number of processors, not cores.

  The following graph shows the impact of multicore pricing on enterprise database editions. SQL Server 2005 Enterprise Edition, when installed on a four-processor server, will require four processor licenses for a total cost of about $100,000

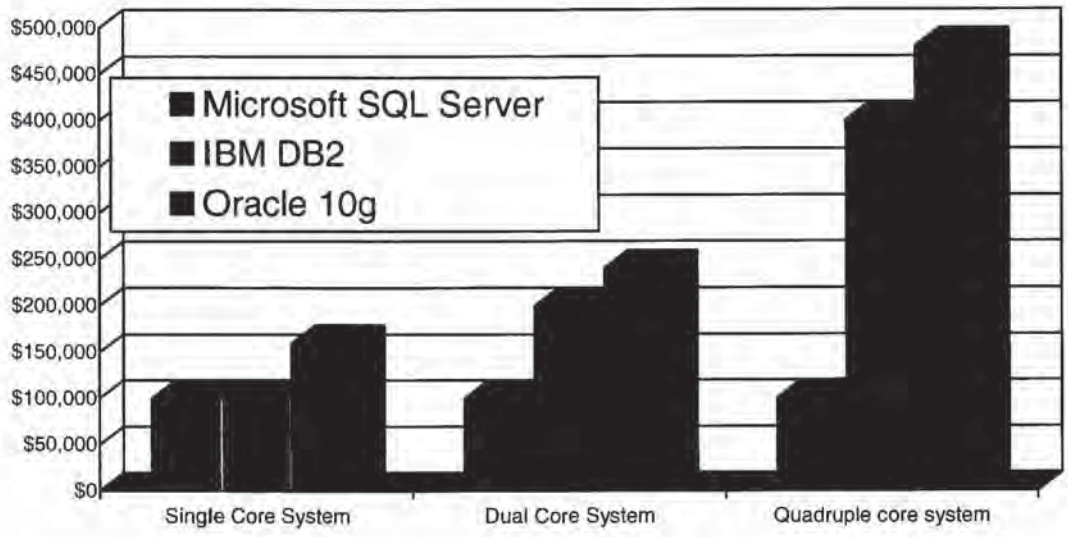

Note: All prices are for purchases within the United States and are in United States dollars. Pricing based on information available on vendor Web sites. For Romania, additional discounts may apply.

- **Maintenance costs** – Usually, the yearly maintenance costs is equal with 20-25% of the list price. Because Oracle and IBM prices are usually higher than Microsoft's, this can impact also the maintenance and support costs too.

Maintenance gives customers the right to newer versions of the software. Vendors normally offer different levels of support, ranging from business hours support all the way up to dedicated, on-site support. In contrast to Microsoft, Oracle and IBM require a maintenance agreement for the provision of service packs and security patches.

Given the longevity of databases, it's important to consider the much higher ongoing cost required to maintain an Oracle or IBM database.

Microsoft's Software Assurance gives customers automatic access to new technology and provides productivity benefits, support, tools, and training to help efficiently deploy and use software. In addition to new version rights, benefits include:

- Spread Payments
- Home Use Program (HUP)
- Employee Purchasing Program (EPP)
- TechNet Plus and TechNet Managed Newsgroups
- Problem Resolution Support (PRS)
- Extended Hotfix Support
- "Cold" Backups for Disaster Recovery

- Corporate Error Reporting (CER)
- Enterprise Source Licensing Program (ESLP)
- Windows Preinstallation Environment (WinPE)
- Microsoft E-Learning
- Training Vouchers

More information on Microsoft's Software Assurance program is available at http://www.microsoft.com/licensing/programs/sa/default.mspx.

Free support is available from Microsoft via public "Knowledge Base" – http://support.microsoft.com. As paid support, Microsoft has a service called "PREMIER Support" which can be extended not only for database, but also for entire platform (NOS, desktops, file services, directory services, messaging, application services). This is an expensive service (the price is open to negotiation and could range from 30.000 USD to 50.000 USD per 10 yearly incidents, depending on desired deliverables needed by RNMA) provided by consulting department inside Microsoft Romania subsidiary.

- **Total cost of ownership (TCO)** – After looking at the cost of database software, the next step is to bring everything together with a comparison of total cost of ownership (TCO). Independent third-party studies have determined that SQL Server offers lower TCO across multiple cost categories, with the largest savings usually coming from ongoing operations. In fact, a study by NerveWire found that SQL Server's cost advantages versus the competing product translated into a 47 percent cost savings over the three-year period covered in the survey. The results of the study are summarized as follows.

Application Type	Cost	SQL Server TCO	Competing Product TCO	Percentage Savings
Cross Organizational Applications (100+ users)	Ongoing Operations	$511,928	$926,078	45%
	Design & Development	$158,381	$181,875	13%
	Software Licensing	$75,000	$225,000	67%
	Hardware	$101,500	$221,500	54%
	Maintenance	$64,500	$145,125	56%
	Training	$12,627	$31,388	60%
	Total TCO	**$923,936**	**$1,730,966**	**47%**
Departmental Applications (50-100 users)	Ongoing Operations	$209,411	$312,886	33%
	Design & Development	$37,474	$49,274	24%
	Software Licensing	$15,000	$45,000	67%
	Hardware	$34,300	$74,300	54%
	Maintenance	$12,900	$29,025	56%
	Training	$1,681	$3,643	54%
	Total TCO	**$310,767**	**$514,128**	**40%**

IV.G. Cross-Platform Considerations

In institutions like RNMA there are several platform used, starting from different flavours of Linux, UNIX, Sun and Windows. The database product should provide the interoperability needed for such a heterogeneous environment.

In out opinion is not an important issue the cross-platform issue, meaning on what OS can the RDBMS run (except MS SQL, every RDBMS product can run under UNIX/Linux operating systems). It is more important to research the cross-platform issue, in the light of client-server connectivity. Can a UNIX client connect to a database that runs on Windows OS? Can a Windows client run on a database that runs in a Unix OS? The short answer to that is yes. Regardless the RDBMS, there are client stacks/libraries for other operating systems.

The least obvious cross-platform option is MS SQL. For MS SQL there are several free options to connect from clients under UNIX/Linux environment:

- A **TDS driver** is available as open-source from www.freetds.org; from the site we learn that "FreeTDS is a free implementation of the TDS (Tabular Data Stream) protocol that is

used by Sybase and Microsoft for their database products. It implements TDS 4.2, 5.0, 7.0 and 8.0, and can communicate with any Sybase or Microsoft SQL Server. FreeTDS comes with a low level library (the TDS layer) along with a number of APIs (Application Programming Interfaces). The APIs are DB-Lib, CT-Lib, and ODBC. A JDBC driver has also been contributed under a BSDish license and is available from the download page. It does not require the FreeTDS C libraries."

- **ODBC drivers** are available as open source downloads from http://www.iodbc.org/. Here we learn that "iODBC is the acronym for Independent Open DataBase Connectivity, an Open Source platform independent implementation of both the ODBC and X/Open specifications. It is rapidly emerging as the industry standard for developing solutions that are language, platform and database independent. What is the iODBC Value Proposition? The ability to develop applications independent of back-end database engine, operating system, and for the most part programming language. Although ODBC and iODBC are both 'C' based Application Programming Interfaces (APIs) there are numerous cross language hooks and bridges from languages such as: C++, Java, Perl, Python, TCL etc. iODBC has been ported to numerous platforms, including: Linux (x86, Itanium, Alpha, Mips, and StrongArm), Solaris (Sparc & x86), AIX, HP-UX (PA-RISC & Itanium), Digital UNIX, Dynix, Generic UNIX 5.4, FreeBSD, MacOS 9, MacOS X, DG-UX, and OpenVMS."

  ODBC is the acronym for Open DataBase Connectivity, a Microsoft Universal Data Access standard that started life as the Windows implementation of the X/Open SQL Call Level Interface specification. Since its inception in 1992 it has rapidly become the industry standard interface for developing database independent applications. Is is also the emerging standard interface for SQL based database engines replacing many of the first generation Embedded SQL and proprietary call level interfaces provided by database engine and database connectivity middleware vendors alike.

- **JDBC drivers** - Java Database Connectivity is an application program interface (API) specification for connecting programs written in Java to the data in popular databases. The application program interface lets you encode access request statements in structured query language (SQL) that are then passed to the program that manages the database.

Microsoft provides a free JDBC driver for SQL Server that runs on both Unix and Windows. Downloads are available here:

http://www.microsoft.com/downloads/details.aspx?familyid=07287B11-0502-461A-B138-2AA54BFDC03A&displaylang=en for SQL 2000 SP3

and

http://www.microsoft.com/downloads/details.aspx?familyid=e22bc83b-32ff-4474-a44a-22b6ae2c4e17&displaylang=en for SQL 2005.

- **XML queries** – SQL provide very simple way of accessing data formatted as XML (de facto standard when it comes to interoperability). Every stored procedure can be transformed in a web service and every **SELECT** query can return XML formatted data by appending "**FOR XML**" clause.

- **NET drivers** that run on UNIX are available from Mono project (www.go-mono.org). "Mono provides the necessary software to develop and run .NET client and server applications on Linux, Solaris, Mac OS X, Windows, and UNIX. Sponsored by Novell (http://www.novell.com), the Mono open source project has an active and enthusiastic contributing community and is positioned to become the leading choice for development of Linux applications."

IV. Proposed System and Future Recommendations

Given the previous evaluations Microsoft's solution it's most recommended cost-wise. IBM DB2 would integrate better with the supercomputing system but it's very expensive. Microsoft SQL Server 2005 is a robust solution that can be implemented at reasonable costs for RNMA. If the key factor is the price then MS SQL is the best option. However, if the key factor here is the level of integration and the supercomputing system is IBM-based then the best option is IBM DB2. As exchange mechanisms the most feasible solution is VPN-based. Following is a more detailed description of the future system. In term of human resources, RNMA need to invest more on training and education.

V.A. **Proposed System Architecture**

The SOA data collection system which is based on MS Access now has to be upgraded to a real 2PC (two phase commit), ACID compliant, high available, cost effective and manageable database server solution (software and hardware) and also the data replication mechanism has to be redesigned in order to be moved to the VPN network communication.

The future system will be tailored on organizational configuration of RNMA. There is a central location and 7 subsidiaries connected to collection stations; therefore the resulting hierarchical composition replication configuration of the national database system it's obvious.

At RFC site we propose an optional EAI (Enterprise Application Integration) tool like Microsoft Biztalk Server, or an ETL (Extract, Transform, Load) tool for transporting data from MS Access and other non-2PC data sources into the new databases; Microsoft SQL Server comes with several editions: Express, Workgroup, Standard, Enterprise, Developer and Mobile.

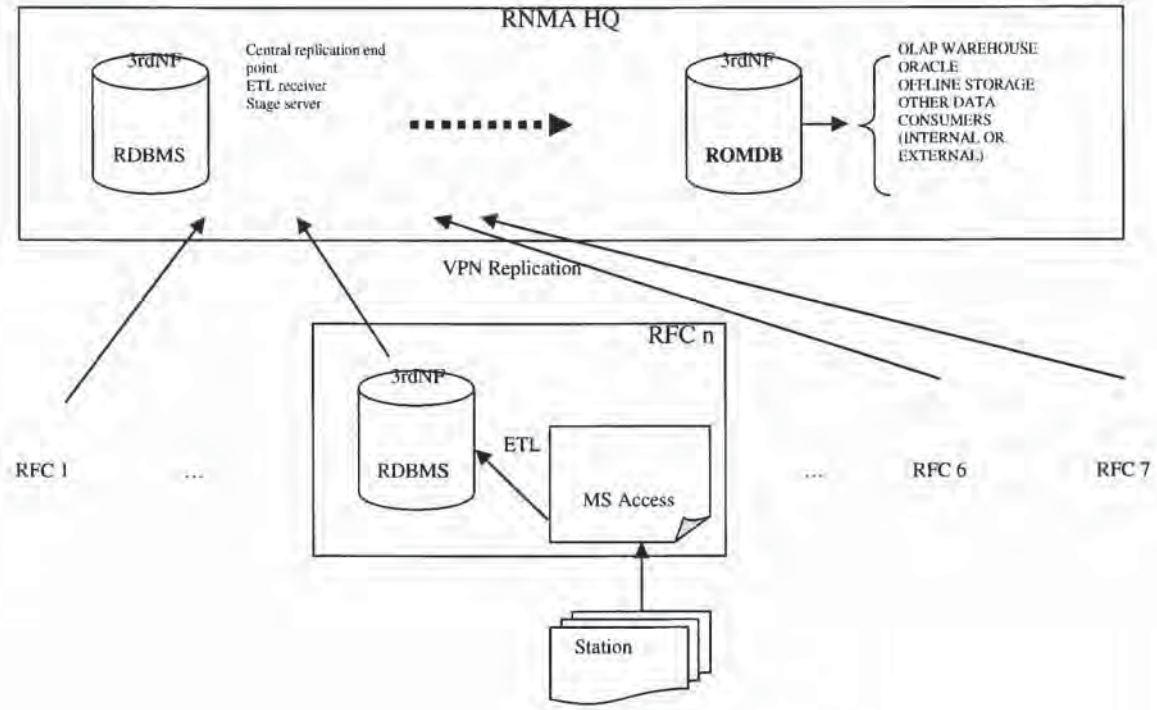

MS Access and RDBMS will integrate via ETL (Extract, Transform, Load) tools. These tools will provide the needed features for transforming data from a non-3rdNF/non-2PC environment into the new RDBMS. These two data repositories will run side by side for a period of time. The length of this timeframe depends on how quick the old applications (that consumes MS Access data) will be ported to consume the RDBMS data. In time this system will evolve into a pure 100% RDBMS oriented one. MS Access data repository will disappear being replaced entirely by chosen RDBMS.

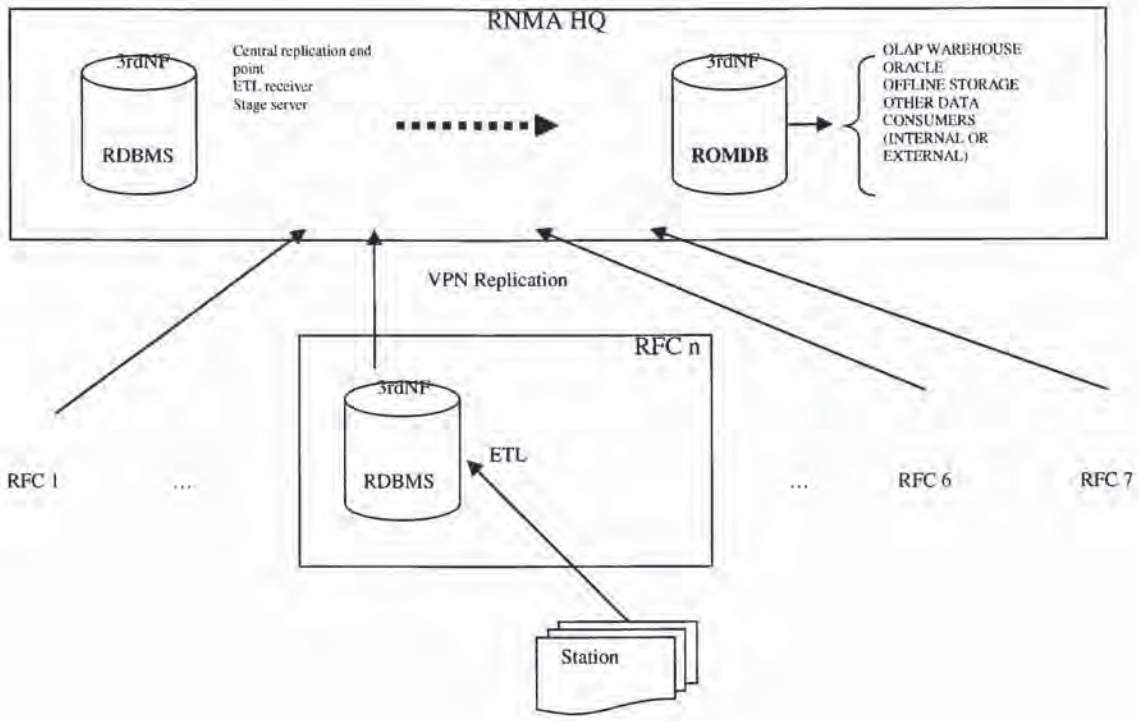

Every mission critical RDBMS server should be doubled by a hot backup. Every 2PC system has a way of keeping an online hot backup server with the help of log shipping-like technologies. The hot backups should be decided by RNMS staff based on the mission critical criteria.

V.B. Envisioning of the new data exchange mechanisms

The actual data acquisition system should be upgraded to accommodate faster and more reliable data collection from the branch offices, using the newest technology on the market and with minimum changes to the existing system.

The data exchange system has to be designed taking into account that RNMA organization has territorially distributed branches, and has to be implemented in multi-location configurations because there is a need for real time data communication.

The application should optimize data transport between different databases of the organization using customized routes and scenarios. Importance degrees could be set for certain information in order to prioritize data transmission. Other features could be data/information transmission management, communication monitoring, specific reports.

Main identified features for the new internal data exchange mechanism are:

- Data replication takes place between geographically distributed locations and a central headquarter (both ways) which allows a real time centralization and/or sharing of information with data auditing, journaling, routes configuration, storage/transportation redundancy, data synchronization between database servers, automatic system status (on/off) awareness.

- Robust data synchronization between different layers of the national system in order to provide live data feed for the modeling system.

- Multiroute data replication tool between distributed databases on a multi tier tree-like architecture (possible replication routes can look like Sensor Station -> ... -> Regional Forecasting Centre -> ... -> Centre Forecasting Centre, or subsegments of this, and back).

- The application should based on a universal data model (meta-database) in order to be able to transport any type of sensor data organized in both existing structures or from future projects.

- The replication mechanism will use configurable routes and time intervals, according to user's requirements.

- Easy interfacing with any type of data sources for import and export of information with other systems.

- Capability of rebuild of database in case of various failures (operating system software, database management system, hardware failure) using the last backup and data from linked systems.

- Intuitive interface for features management and different reports on transfer completion, problems appeared etc.

- Tool for assistance in decisions regarding equipment and communication maintenance on the basis of their performances.

Exchanging data with external entities could be easily achieved adopting SOA (Service Oriented Architecture) architecture. In this way the communication of RNMA with international organization will be based on "schema contracts" tat defines the format of exchanged files and the method of access to data.

In terms of data warehousing and data backup strategy RNMA will, most probably, adopt the OLTP-OLAP-BACKUP data flow:

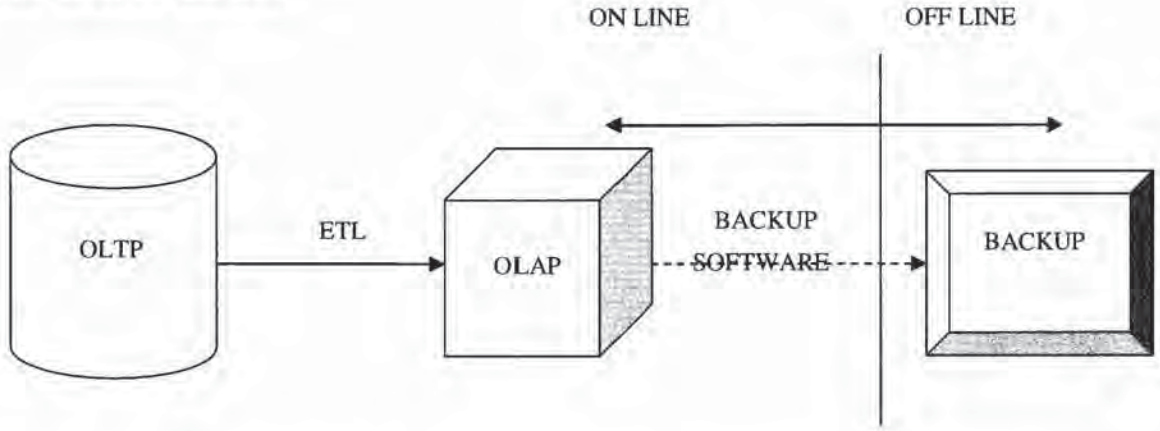

Please do not confuse the safety backup (copy or duplication of data) with high availability (back-up of service). For high availability we can recommend two backup approaches:

- "Cold" backup – stored on tapes, therefore an off line storage media; if the system fail then the restore process must be initiated; in this configuration a downtime (matter of hours) of data services must be considered (depending on how much data is going to be restored).

- "Hot backup" – a separate server copying every transaction on the main server; if the main server (cluster) fail, then the hot backup enters into action; In this configuration the downtime is a matter of minutes and the backup of data becomes a backup of service too (transforming this option into a high availability-based one); This option with Microsoft SQL Server 2005 does not require a separate license for hot backup server, unless the passive server has more processors than the active server, and the active server is licensed under the per processor model. Still a cold back-up is required on an offline storage media (in order to duplicate the data).

V.C. Hardware Needs

There is clear distinction, hardware wise, between the 2 major needs:

- Data storage/warehousing power needs
- Computing/processing power needs (for this please consult "Feasibility Study of a High Performance Computing Facility for the Romanian National Meteorological Administration" Deliverable)

Description of OLTP/OLAP approach

- The **central data storage system** will have a double role in storing OLTP data and OLAP data. These systems can be installed on 2 separate machines which should be a cluster database server and a smaller server as a hot (online) backup system, at RNMA in Bucharest.

- Also, we are suggesting the acquisition of **database servers at the Regional Centers** (7) in order to move or synchronize the MS Access application to a Server-like database management system (e.g. Microsoft SQL Server 2000/2005) to upgrade the data collection system.

	Minimum	Recommended
RNMA HQ central replication endpoint	1 node RAID 5, 10000 rpm, 8 MB cache, HDD Node Configuration: 1 processor 3 GHz 2 GB RAM	2 nodes RAID 5, >10000 rpm, 16 Mb cache HDD Node Configuration: 2 processors 4 GHz 4 GB RAM
RNMA HQ hot backup server	1 processor 3 GHz RAID 5, 10000 rpm, 8 MB cache, HDD 2 GB RAM	2 processors 4 GHz RAID 5, >10000 rpm, 16 Mb cache HDD 4 GB RAM
RNMS RFC servers (7 servers)	1 processor 3 GHz 1 GB RAM	1 dual-core proc 3 GHz 2 GB RAM

Note: If the operating system under which system will run will be Windows based, be sure to require equipment that is HCL compliant. For more information see http://www.microsoft.com/whdc/hcl/search.mspx. If the above configurations become obsolete at the moment of hardware bid, please reconsider updating those configurations appropriately;

For the size of hard drives please consider using the SAN of supercomputing system at the central location. This is why we didn't specify the storage size of the hard drives. This parameter will also depend on the future amount of data;

Regarding the vendors please choose among Cray, SGI, IBM, and HP given the local presence of these companies in Romania. IBM seems to have an advantage given the fact they will provide, most probable, the super computing system. We highly recommend RNMA not to acquire non-brand/no-name equipments.

Possible price quotations, based on IBM and HP offers, are given below:

Type/Level of hardware	Price
HQ Operational failover cluster – 1 node	$4500
HQ Operational failover cluster – 2 nodes	$6500
HQ central replication endpoint – 1 node	$4500
HQ central replication endpoint – 2 nodes	$6500
Hot backup server	$6500
Branch servers	$7500

For detailed minimal and recommended hardware configuration of RDBMS servers please consult ANNEX A

- For the processing power needs we refer to the super computing system used for modeling purposes. For this please consult the supercomputing document "A High Performance Computing Facility for the Romanian National Meteorological Administration."

V.D. Software needs

Microsoft SQL Server 2005 will be implemented around the RNMA sites and developers will develop databases on separate machines. For developers, we recommend separate machines and licenses.

	QTY per proc recommended	Unit Price	TOTAL
MS SQL Ent Ed	1	$23,911	$23,911
MS SQL Std Ed	7	$5,737	$40,159
MS SQL Dev Ed	2	$50	$100
GRAND TOTAL:			$64,170

Please note that every licensed client have the right to use Ms SQL Personal Edition for free.

In some cases per user/per device licensing model is more convenient and should be carefully investigated before making the buying decision.

For sure implementing these new servers will imply some additional costs in terms of new development effort for in house applications. These tools are, at the moment, pure client-server applications (two tier). This implies that there is no middleware or business logic layer in this configuration. We highly recommend redesign of these applications in the "n-tier" fashion. Building a strong "business logic" layer will provide RNMA with great reusability and agility in terms of information systems. Considering average costs of Junior/Senior developers we provide an approximate estimation of involved costs:

Type/Level of service	Daily rate	Man-days	TOTAL
Junior DBAs/Devs	€ 150	25	€ 3750
Senior DBAs/Devs	€ 300	50	€ 15000
Project Management	€ 400	10	€ 4000
	TOTAL	85	€ 22750

Services could include:

- Database Schema Design (ERD – Entity Relationship Diagram)
- Development (writing code for applications and database itself)
- Moving Access Applications to RDBMS with minimal operational impact
- Moving GIS layouts into RDBMS
- Replication system (design and implementation)
- Documentation and training for new developed systems.

Other services that should be taken into account but are hard to be estimated in the scope of this feasibility study:

- Training for DBAs on the chosen RDBMS
- Technical support (hardware and software, including OS).

V.E. New HR allocation

We have two choices here: one is to invest in one or two high qualified (senior) individual that is able to manage in a centralized way, the other one is to hire 7 DBA's (6+1) with medium-skills that will manage the system according to well established policies.

Following is the situation of the needed personnel, for this system to operate in good conditions:

Level of qualifications	No.	Monthly Salary (net per person)	Yearly training costs (per person)
Senior DBA	2	€ 600	€ 600
Junior DBA	6	€ 300	€ 600
DB Developer (optional)	1	€ 500	€ 600
TOTAL	10		

Even there are 7 RFC, one of them (Muntenia) is in the same location with HQ so it can be administered by one of Senior DBAs.

V. Conclusions

Here are the key points regarding the database strategy inside RNMA:

- "*Romanian Operational Meteorological Database*" (ROMDB) is an important step in RNMA's strategy regarding database services. The central an regional locations must be consolidated un uniformized with an unified database both in terms of database platform and database entity relationship management. The replication of the data will transfer data around this distributed system in order to make available all the needed data at the corresponding level.

- We strongly encourage the upgrade of the regional Access data repositories to a robust 2PC flavor of RDBMS and the implementation of a replication mechanism via existing VPN.

- At the central location we believe is appropriate a failover configuration in order to assure high availability of the system

- At the moment, allocated human resources are insufficient and the additional training is required for existing staff.

- Choosing among available RDBMSes products on the market is a matter of price, easy of use and administer, easy to upgrade and availability of DBA's.

- Migration effort should be minimized choosing the right database solution.

ANNEX A – Minimal and Recommended Hardware Configurations

Minimal Configuration

HQ Operational failover cluster - 1 node	
Processor	Intel Xeon 3.2 Ghz, dual core, 1066MHz FSB, EM64T, 2x2MB cache L2
RAM	2GB PC2-5300 DDR2 667MHz fully buffered registered ECC
	12 DIMM slots, support for up to 48GB, support for memory mirroring, hot-spare memory
HDD	3 x 73GB HDD SAS hot swap, 10000 RPM
	3 x 146GB HDD SAS hot swap, 10000 RPM
Optical drive	CD-RW/DVD-ROM combo drive
Controller HDD/RAID	SAS controller, 256MB RAM, battery backup for cache, support for RAID 0, 1, 5, 10
Power supply	Two redundant power supply, hot-swap, 2 x 835W
Video	Integrated on motherboard, 16MB RAM
Network Interface	2 x Integrated Gigabit Ethernet 10/100/1000Mbps, full duplex, wake-on-LAN, Alert Standard Format 2.0, TCP Offload Engine, failover network
Slots	2 x PCI-Express x8 or 2 x PCI-X 64 bit/133MHz
	2 x PCI-Express x4
Ports	1 x Serial port; 6 x USB 2.0 (two on front panel); 2 x RJ-45; 1 x RJ-45 for system management; 2 x VGA port (one on front panel); 1 x SAS external connector
System management	Continuously monitors system environmentals (temperatures and voltages), operating system status, critical system components such as processors, VRMs, memory, fans, power supplies.
	Automatic notification and alerts; LAN and systems management interconnect remote access; Remote media (Virtual CD and floppy); Secure Socket Layer (SSL) and Lightweight Directory Access Protocol (LDAP); System power control.
	Predictive Failure Analysis (PFA) on HDDs, memory, VRMs, processors, and fans to help alert the system administrator of imminent component failure.
Case	2U rackmountable
Fans	Redundant, hot-swap, variable speed
Warranty	3 years on-site

HQ central replication endpoint - 1 node	
Processor	Intel Xeon 3.2 Ghz, dual core, 1066MHz FSB, EM64T, 2x2MB cache L2
RAM	2GB PC2-5300 DDR2 667MHz fully buffered registered ECC
	12 DIMM slots, support for up to 48GB, support for memory mirroring, hot-spare memory
HDD	3 x 73GB HDD SAS hot swap, 10000 RPM
	3 x 146GB HDD SAS hot swap, 10000 RPM
Optical drive	CD-RW/DVD-ROM combo drive
Controller HDD/RAID	SAS controller, 256MB RAM, battery backup for cache, support for RAID 0, 1, 5, 10
Power supply	Two redundant power supply, hot-swap, 2 x 835W
Video	Integrated on motherboard, 16MB RAM
Network Interface	2 x Integrated Gigabit Ethernet 10/100/1000Mbps, full duplex, wake-on-LAN, Alert Standard Format 2.0, TCP Offload Engine, failover network
Slots	2 x PCI-Express x8 or 2 x PCI-X 64 bit/133MHz
	2 x PCI-Express x4
Ports	1 x Serial port; 6 x USB 2.0 (two on front panel); 2 x RJ-45; 1 x RJ-45 for system management; 2 x VGA port (one on front panel); 1 x SAS external connector
System management	Continuously monitors system environmentals (temperatures and voltages), operating system status, critical system components such as processors, VRMs, memory, fans, power supplies.
	Automatic notification and alerts; LAN and systems management interconnect remote access; Remote media (Virtual CD and floppy); Secure Socket Layer (SSL) and Lightweight Directory Access Protocol (LDAP); System power control.
	Predictive Failure Analysis (PFA) on HDDs, memory, VRMs, processors, and fans to help alert the system administrator of imminent component failure.
Case	2U rackmountable
Fans	Redundant, hot-swap, variable speed
Warranty	3 years on-site

HQ hot backup server – 1	
Processor	Intel Xeon 3.2 Ghz, dual core, 1066MHz FSB, EM64T, 2x2MB cache L2
RAM	2GB PC2-5300 DDR2 667MHz fully buffered registered ECC
	12 DIMM slots, support for up to 48GB, support for memory mirroring, hot-spare memory
HDD	3 x 73GB HDD SAS hot swap, 10000 RPM
	3 x 146GB HDD SAS hot swap, 10000 RPM
Optical drive	CD-RW/DVD-ROM combo drive
Controller HDD/RAID	SAS controller, 256MB RAM, battery backup for cache, support for RAID 0, 1, 5, 10
Power supply	Two redundant power supply, hot-swap, 2 x 835W
Video	Integrated on motherboard, 16MB RAM
Network Interface	2 x Integrated Gigabit Ethernet 10/100/1000Mbps, full duplex, wake-on-LAN, Alert Standard Format 2.0, TCP Offload Engine, failover network
Slots	2 x PCI-Express x8 or 2 x PCI-X 64 bit/133MHz
	2 x PCI-Express x4
Ports	1 x Serial port; 6 x USB 2.0 (two on front panel); 2 x RJ-45; 1 x RJ-45 for system management; 2 x VGA port (one on front panel); 1 x SAS external connector
System management	Continuously monitors system environmentals (temperatures and voltages), operating system status, critical system components such as processors, VRMs, memory, fans, power supplies.
	Automatic notification and alerts; LAN and systems management interconnect remote access; Remote media (Virtual CD and floppy); Secure Socket Layer (SSL) and Lightweight Directory Access Protocol (LDAP); System power control.
	Predictive Failure Analysis (PFA) on HDDs, memory, VRMs, processors, and fans to help alert the system administrator of imminent component failure.
Case	2U rackmountable
Fans	Redundant, hot-swap, variable speed
Warranty	3 years on-site

Branch servers – 1	
Processor	Intel Xeon 3.2 Ghz, dual core, 1066MHz FSB, EM64T, 2x2MB cache L2
RAM	1GB PC2-5300 DDR2 667MHz fully buffered registered ECC
	12 DIMM slots, support for up to 48GB, support for memory mirroring, hot-spare memory
HDD	3 x 73GB HDD SAS hot swap, 10000 RPM
	3 x 146GB HDD SAS hot swap, 10000 RPM
Optical drive	CD-RW/DVD-ROM combo drive
Controller HDD/RAID	SAS controller, 256MB RAM, battery backup for cache, support for RAID 0, 1, 5, 10
Power supply	Two redundant power supply, hot-swap, 2 x 835W
Video	Integrated on motherboard, 16MB RAM
Network Interface	2 x Integrated Gigabit Ethernet 10/100/1000Mbps, full duplex, wake-on-LAN, Alert Standard Format 2.0, TCP Offload Engine, failover network
Slots	2 x PCI-Express x8 or 2 x PCI-X 64 bit/133MHz
	2 x PCI-Express x4
Ports	1 x Serial port; 6 x USB 2.0 (two on front panel); 2 x RJ-45; 1 x RJ-45 for system management; 2 x VGA port (one on front panel); 1 x SAS external connector
System management	Continuously monitors system environmentals (temperatures and voltages), operating system status, critical system components such as processors, VRMs, memory, fans, power supplies.
	Automatic notification and alerts; LAN and systems management interconnect remote access; Remote media (Virtual CD and floppy); Secure Socket Layer (SSL) and Lightweight Directory Access Protocol (LDAP); System power control.
	Predictive Failure Analysis (PFA) on HDDs, memory, VRMs, processors, and fans to help alert the system administrator of imminent component failure.
Case	2U rackmountable
Fans	Redundant, hot-swap, variable speed
Warranty	3 years on-site

Recommended Configuration

HQ Operational failover cluster - 2 nodes	
Processor	2 x Intel Xeon 3.2 Ghz, dual core, 1066MHz FSB, EM64T, 2x2MB cache L2
RAM	4GB PC2-5300 DDR2 667MHz fully buffered registered ECC
	12 DIMM slots, support for up to 48GB, support for memory mirroring, hot-spare memory
HDD	3 x 73GB HDD SAS hot swap, 10000 RPM
	3 x 146GB HDD SAS hot swap, 10000 RPM
Optical drive	CD-RW/DVD-ROM combo drive
Controller HDD/RAID	SAS controller, 256MB RAM, battery backup for cache, support for RAID 0, 1, 5, 10
Power supply	Two redundant power supply, hot-swap, 2 x 835W
Video	Integrated on motherboard, 16MB RAM
Network Interface	2 x Integrated Gigabit Ethernet 10/100/1000Mbps, full duplex, wake-on-LAN, Alert Standard Format 2.0, TCP Offload Engine, failover network
Slots	2 x PCI-Express x8 or 2 x PCI-X 64 bit/133MHz
	2 x PCI-Express x4
Ports	1 x Serial port; 6 x USB 2.0 (two on front panel); 2 x RJ-45; 1 x RJ-45 for system management; 2 x VGA port (one on front panel); 1 x SAS external connector
System management	Continuously monitors system environmentals (temperatures and voltages), operating system status, critical system components such as processors, VRMs, memory, fans, power supplies.
	Automatic notification and alerts; LAN and systems management interconnect remote access; Remote media (Virtual CD and floppy); Secure Socket Layer (SSL) and Lightweight Directory Access Protocol (LDAP); System power control.
	Predictive Failure Analysis (PFA) on HDDs, memory, VRMs, processors, and fans to help alert the system administrator of imminent component failure.
Case	2U rackmountable
Fans	Redundant, hot-swap, variable speed
Warranty	3 years on-site

HQ Operational failover cluster - 2 nodes	
Processor	2 x Intel Xeon 3.2 Ghz, dual core, 1066MHz FSB, EM64T, 2x2MB cache L2
RAM	4GB PC2-5300 DDR2 667MHz fully buffered registered ECC
	12 DIMM slots, support for up to 48GB, support for memory mirroring, hot-spare memory
HDD	3 x 73GB HDD SAS hot swap, 10000 RPM
	3 x 146GB HDD SAS hot swap, 10000 RPM
Optical drive	CD-RW/DVD-ROM combo drive
Controller HDD/RAID	SAS controller, 256MB RAM, battery backup for cache, support for RAID 0, 1, 5, 10
Power supply	Two redundant power supply, hot-swap, 2 x 835W
Video	Integrated on motherboard, 16MB RAM
Network Interface	2 x Integrated Gigabit Ethernet 10/100/1000Mbps, full duplex, wake-on-LAN, Alert Standard Format 2.0, TCP Offload Engine, failover network
Slots	2 x PCI-Express x8 or 2 x PCI-X 64 bit/133MHz
	2 x PCI-Express x4
Ports	1 x Serial port; 6 x USB 2.0 (two on front panel); 2 x RJ-45; 1 x RJ-45 for system management; 2 x VGA port (one on front panel); 1 x SAS external connector
System management	Continuously monitors system environmentals (temperatures and voltages), operating system status, critical system components such as processors, VRMs, memory, fans, power supplies.
	Automatic notification and alerts; LAN and systems management interconnect remote access; Remote media (Virtual CD and floppy); Secure Socket Layer (SSL) and Lightweight Directory Access Protocol (LDAP); System power control.
	Predictive Failure Analysis (PFA) on HDDs, memory, VRMs, processors, and fans to help alert the system administrator of imminent component failure.
Case	2U rackmountable
Fans	Redundant, hot-swap, variable speed
Warranty	3 years on-site

HQ hot backup server – 2	
Processor	2 x Intel Xeon 3.2 Ghz, dual core, 1066MHz FSB, EM64T, 2x2MB cache L2
RAM	4GB PC2-5300 DDR2 667MHz fully buffered registered ECC
	12 DIMM slots, support for up to 48GB, support for memory mirroring, hot-spare memory
HDD	3 x 73GB HDD SAS hot swap, 10000 RPM
	3 x 146GB HDD SAS hot swap, 10000 RPM
Optical drive	CD-RW/DVD-ROM combo drive
Controller HDD/RAID	SAS controller , 256MB RAM, battery backup for cache, support for RAID 0, 1, 5, 10
Power supply	Two redundant power supply, hot-swap, 2 x 835W
Video	Integrated on motherboard, 16MB RAM
Network Interface	2 x Integrated Gigabit Ethernet 10/100/1000Mbps, full duplex, wake-on-LAN, Alert Standard Format 2.0, TCP Offload Engine, failover network
Slots	2 x PCI-Express x8 or 2 x PCI-X 64 bit/133MHz
	2 x PCI-Express x4
Ports	1 x Serial port; 6 x USB 2.0 (two on front panel); 2 x RJ-45; 1 x RJ-45 for system management; 2 x VGA port (one on front panel); 1 x SAS external connector
System management	Continuously monitors system environmentals (temperatures and voltages), operating system status, critical system components such as processors, VRMs, memory, fans, power supplies.
	Automatic notification and alerts; LAN and systems management interconnect remote access; Remote media (Virtual CD and floppy); Secure Socket Layer (SSL) and Lightweight Directory Access Protocol (LDAP); System power control.
	Predictive Failure Analysis (PFA) on HDDs, memory, VRMs, processors, and fans to help alert the system administrator of imminent component failure.
Case	2U rackmountable
Fans	Redundant, hot-swap, variable speed
Warranty	3 years on-site

Branch servers – 2	
Processor	Intel Xeon 3.2 Ghz, dual core, 1066MHz FSB, EM64T, 2x2MB cache L2
RAM	2GB PC2-5300 DDR2 667MHz fully buffered registered ECC
	12 DIMM slots, support for up to 48GB, support for memory mirroring, hot-spare memory
HDD	3 x 73GB HDD SAS hot swap, 10000 RPM
	3 x 146GB HDD SAS hot swap, 10000 RPM
Optical drive	CD-RW/DVD-ROM combo drive
Controller HDD/RAID	SAS controller, 256MB RAM, battery backup for cache, support for RAID 0, 1, 5, 10
Power supply	Two redundant power supply, hot-swap, 2 x 835W
Video	Integrated on motherboard, 16MB RAM
Network Interface	2 x Integrated Gigabit Ethernet 10/100/1000Mbps, full duplex, wake-on-LAN, Alert Standard Format 2.0, TCP Offload Engine, failover network
Slots	2 x PCI-Express x8 or 2 x PCI-X 64 bit/133MHz
	2 x PCI-Express x4
Ports	1 x Serial port; 6 x USB 2.0 (two on front panel); 2 x RJ-45; 1 x RJ-45 for system management; 2 x VGA port (one on front panel); 1 x SAS external connector
System management	Continuously monitors system environmentals (temperatures and voltages), operating system status, critical system components such as processors, VRMs, memory, fans, power supplies.
	Automatic notification and alerts; LAN and systems management interconnect remote access; Remote media (Virtual CD and floppy); Secure Socket Layer (SSL) and Lightweight Directory Access Protocol (LDAP); System power control.
	Predictive Failure Analysis (PFA) on HDDs, memory, VRMs, processors, and fans to help alert the system administrator of imminent component failure.
Case	2U rackmountable
Fans	Redundant, hot-swap, variable speed
Warranty	3 years on-site

Accessories (optional)

RACK 42U + ACCESORII	
Rack	Rack 42U with perforated front door, improved air flow for a fan-free environment, thermally optimized to support high heat and power loads, six side-wall compartments to support 1 U-high power distribution units (PDU)s and switches without taking up valuable rack space, cable management system, easy to install and remove side panels, front door hinged on either side to provide flexibility to open in either direction, split rear door for improved serviceability and access, front and rear doors and side panels include locks and keys; made by the same vendor as for the servers
Flat-Panel Monitor Console Kit	1U 17" TFT, 1280x1024, Brightness: 250 cd/m2, Contrast:400:1, Viewing angle: 150 degrees to 115 degrees (H/V); PS/2 keyboard with built-in navigation system, touchpad and trackpoint; made by the same vendor as for the servers.
KVM Switch	16 x RJ-45 ports, 1 x RS232 port, 2 x PS/2, 1 x VGA for console, KVM cables for connecting the servers
UPS	3000VA, 6 x IEC 320-C13, 1 x 1 IEC 320-C20 (PDU support), Connections for management: USB, serial, and 10/100 Network Module, rackmountable 2U, 1 hot-swappable internal battery provides more than four minutes of run time at a load of 2700W, supports up to four extend run battery packs for approximately 90 additional minutes of run time
Multiple power outlet	Multiple outlet 220V-240V, 50/60Hz, 7 output connectors IEC 320 C13, 1 input connector IEC 309 C20, 15A
Power cords	For connecting the servers to UPS

TASK 3

COMPUTING NEEDS ASSESSMENT TO SUPPORT MODELS

III. COMPUTING NEEDS ASSESSMENT TO SUPPORT MODELS (TASK 3)

A. General

Existing and potential future modeling approaches were reviewed under the TOR Task 3, with RNMA staff in Bucharest to determine existing equipment, software, and institutional arrangements for data input and modeling for the Romanian National Meteorological Agency. The initial meeting was held in May 2005, and a Memorandum report describing the characteristics of the system was written and reviewed by all participants. A revised version of that Memorandum report became the basis for the subsequent steps.

The United States subconsultant for matching modeling intents and needs with computer capabilities, The Ohio State University and the Ohio Supercomputer Center, coordinated with RNMA to identify the governing parameters. The computer demands for expected modeling programs were quantified based on the climatological modeling needs, as the air pollution and agricultural modeling needs are smaller and can be met by relatively small computers. The primary components of a high performance computing facility were identified as to manufacturer, models, and cost.

The information developed in cooperation with RNMA has been integrated into the Interoperate Project Feasibility Study of Relational Database Management Systems for the Romanian National Meteorological Administration.

B. Introduction

As part of the INTEROPERATE project, the Romanian National Meteorological Administration (RNMA) desires to purchase a high performance computer (HPC) system to support numerical weather prediction simulations as well as storage of weather observations. This system must support both operational meso-scale weather models as well as a variety of related research applications. The system must integrate with other aspects of the INTEROPERATE project, such as remote sensing devices and Doppler radar imaging. Moreover, given that the system will provide daily weather forecasting information for all of Romania, the system must be a production-grade, highly available solution integrating high performance computing resources with data storage. Both short-term storage of weather forecast data products and longer-term archival storage of reduced forecast data as well as remote sensing and radar data must be supported.

This report presents one possible system which could fulfill RNMA's needs. The report consists of two parts. The first part assesses the computing needs and current capabilities of RNMA with respect to meso-scale weather forecasting, and will present a number of design criteria which must be met by a system which would fulfill RNMA's needs. The second part of the report will present two system configurations and explain how those systems would meet the design criteria.

C. Assessment of Requirements and Current Capabilities

1. Computational Requirements

RNMA's primary application is meso-scale weather forecasting. There are several widely used applications in this space, including MM5 and its successor WRF in the United States, and ALADIN and AROME in Europe. While these codes vary in their numerical approaches, like many other classes of scientific computing applications their performance characteristics are dominated almost entirely by memory bandwidth. Systems with *high memory bandwidth* – that is, a very high rate of sustained data transfer between the processors and main memory -- have been demonstrated to have superior performance on meso-scale weather forecasting applications compared to systems with higher peak floating point performance but lower memory bandwidth. High memory bandwidth has therefore been identified as a key design criterion.

2. Data Storage Requirements

While meso-scale weather forecasting is RNMA's main computing application, the data products from the forecast computations are not the sole type of data that they need to store. Satellite and Doppler radar imaging data must also be stored, along with remote sensing data generated by other components of the INTEROPERATE project. Very broadly speaking, these data fall into two very broad categories, operational and archival. Operational data is primarily the full output of the meso-scale weather forecasts and is relatively ephemeral; currently RNMA only keeps forecast output for 17 days, although they would like to extend that to an *operational data lifetime of 30 days* if possible. A lifetime of at least 30 days for operational data has therefore been identified as a key design criterion. Archival data, on the other hand, is to be kept for as long as possible – preferably forever. Examples of archival data include satellite and Doppler radar imagery and reduced forecast output.

3. Operational Requirements

RNMA forecasts weather for the entire nation of Romania, which includes several mountainous regions prone to flash flooding. As a result, RNMA requires a very

high degree of *redundancy and fault tolerance* from its production computing system. Single points of failure need to be minimized or eliminated wherever possible, in all aspects of the system. Moreover, the system should have sufficient capacity to keep running the production forecasts in the face of hardware failures in a significant fraction of the system, at the expense of RNMA's research applications if need be. As a result, redundancy and fault tolerance have been identified as key design criteria.

4. Current Capabilities

RNMA currently has two local computing systems used for meso-scale weather forecasting, a Sun E4500 system with eight processors and a 28-processor cluster of commodity systems running Linux. Most of RNMA's production forecasting runs are done using the Sun E4500. Compiler problems on the Linux cluster system are cited as the main reasons of that system's lack of adoption; *vendor compiler support* is considered critical and therefore a key design criterion.

Planning for future collaborations with other European countries is another important consideration. Many other European nations have discussed the computational aspects of weather modeling projects, but relatively few discuss a complete data lifetime solution from acquisition through transfer and storage to numerical modeling, data reduction, and archiving. Upon Romania's entry to the European Union, RNMA would also have access to the HPC facility at the European Center for Medium range Weather Forecasting (ECMWF), which is a cluster of IBM Power4 p690 systems. *Compatibility with ECMWF* is therefore seen as an important part of any future system acquisition and a key design criterion.

With regard to data storage, RNMA currently has several separate pools of online storage allocated to particular projects, with a total capacity of approximately 1.2 terabytes. Offline storage is currently done to a variety of media, including optical (recordable CDROMs and DVDs) and magnetic (4mm DAT). Because the offline storage is handled separately for each type of data, there is to the authors' knowledge no master index of all the data and no automated way of recalling offline data back to online storage. This situation could be remedied with *hierarchical storage management of*

archival data, using a centralized data archive such as a magnetic tape library. As a result, hierarchical storage management for archival data is seen as a key design criterion.

Table 1: RNMA Storage Pools

Project	Current Capacity (GB)	Space Currently Used (GB)	Current Growth Rate (GB/month)	Projected Growth Rate (GB/month)
Climatological Database	50	15	0.5	2
Forecast Data	~50(?)	~50(?)	31	100
Radar Data	604(?)	604(?)	25.4	25.4
Satellite Data	500	500(?)	100-150	100-150

D. **Proposed System**

As described in the previous section, RNMA's computing and operational requirements result in the following design criteria:

- High Memory Bandwidth
- Redundancy and Fault Tolerance
- Vendor Compiler Support
- Operational Data Lifetime of 30 Days
- Compatibility with ECMWF
- Hierarchical Storage Management of Archival Data.

A computations and data storage system has been proposed for RNMA's needs. The recommended system provides the technical performance required in the preceding section and identifies specific equipment meeting their needs. Equipment from other manufacturers with equal characteristics and capabilities may be equally acceptable to RNMA. The equipment characteristics provided are in Attachment A.

TASK 4

METEOROLOGICAL TRAINING NEEDS ASSESSMENT (MET-TRAIN)

IV. METEOROLOGICAL TRAINING NEEDS ASSESSMENT (MET-TRAIN) (TASK 4)

A. Background

The benefits of developing a training program for any National Meteorological Agency are significant. Training programs serve to continuously infuse developing science and technology into existing operations. This serves to maintain a level of expertise that is consistent within a national program as well as current with the domestic and international research and development. A continuous training program that is constantly updated with new and emerging interpretive tools and methods will assure the best application of the existing observation equipment in Romania. A well conceived training program will enhance and stimulate learning. This will in turn allow the atmospheric scientists of Romania to provide the best possible service.

The National Meteorological Agency of Romania has made a significant investment of purely technological solutions, such as a Doppler radar network, local-scale surface data, upper air radiosonde observations, lightening detection network, hydrological buoy sensors, MSG receiving and processing systems, central and regional forecast centers, and a VSAT communication network. Much of this new infrastructure was made available as recently as 2003 as part of the implementation of the SIMIN program.

The RNMA has developed its own meteorological training program in 2004 as part of a National School of Meteorology (NSM), with two training facilities in Bucharest and one in the Dobrogea-Constants district office. Among the courses organized during the past two years, those on nowcasting were attended by more than 100 specialists. Nowcast training was focused on meteorological and aeronautical forecasts. There has also been a great deal of interest in hydrological and water management, in particular hydro-meteorological risk phenomena where 55 specialists participated in the sessions.

There is a great desire to enhance the NSM as a way to integrate the meteorological community in Romania with the general European meteorological community. An advanced NSM will allow for such programs as regional NWP education and provide a state-of-the-art training centre in south-east Europe.

B. Needs

1. General

The RNMA requires training not only in meteorological practices but also general information technology.

General training needs cited by RNMA related to meteorological practices include the following:

- Organize theoretical courses and seminars for the NWP topics covering a wide range of spatial and temporal scales: from local scales (using LES techniques) to the regional climatic scale;

- Organize practical work for the numerical weather prediction models use and exploitation (including the implementation aspects) of different degree of complexity, followed by individual or group mini-projects;

- Provide training for the use of diagnostic, validation and visualization tool;.

- Provide training for coupling NWP models with other models (hydrological, agro-meteorological, pollutant transport and dispersion) to approach the acute economic and social problems involving meteorological and climatic factors;

- Organize discussions and workshops on thematic or regional interest;

- Establish a dedicated page on the NSM web site for the dissemination of common interest NWP information and forum discussions.

General training needs related to Information Technology have been identified as follows:

2. **Supercomputer**

1. Training for the supercomputer monitoring operator.

2. Training for the supercomputer administration (system architecture, OS administration, access and security administration, queuing system etc).

3. Training for supercomputer users:

   a. System architecture
   b. Operating system
   c. Fortran & C compiling environment
   d. Program debugging
   e. Introduction to parallel programming (MPI, Open MP, porting MPI programs)
   f. Optimization and profiling
   g. Batch system and results storage.

4. Training for maintenance of the supercomputer support systems (air conditioning, electric supply, etc.)

3. **Databases**

1. Training for database administrators (installation and configuration, maintenance, design, save and restore functions, optimizing, security and administration of users etc.).

2. Training for the administrators of OS on which the databases are run; training for network administrators.

3. Training for database users (presentation on interface - working procedures, access, updating, storage, etc).

4. Training for the database operator (surveillance of database parameters, available space, bands handling etc.).

C. **Existing Courses**

Courses organized by NMA/NSM

- **Basic Education** (designed for the NMA's new employees), including NWP modules

  - Basic courses on meteorology
  - Weather prediction

- ***Ongoing Education***

  - General meteorology
  - Radar meteorology
  - Agrometeorology
  - Agrometeorological measurements and observations
  - Nowcasting warning
  - Course on Solar Radiation
  - GPS systems use in meteorology
  - How to use the SIMIN application

- ***Meteorological Specialized Training***

  - Satellite meteorology
  - Radar meteorology and nowcasting
  - Radar meteorology, nowcasting and severe weather warnings

- ***Complementary Training***

  - Basic knowledge in UNIX
  - C language elements
  - Windows XP
  - Introductory courses on GIS
  - How to use GIS
  - Implementation and configuration of surface observation procedure

- ***Long Distance Education***

  - Meteorological measurements and observations
  - Introductory courses on satellite meteorology

- ***International Courses***

  - Doppler Radar and Satellite Meteorology for Nowcasting.

D. **Training Assessment and Recommendations**

1. Meteorology

Elements of the training should cover the most important meteorological topics and challenges to Romania. The following topics should be relevant in Romania and should be part of a national meteorological training program. The RNMA has already incorporated many of these topics within their existing courses. The courses that are included as a topic under the existing training program are indicated by a " * " appended to the heading. It may be appropriate to modify and upgrade these existing courses in consideration of the new programs, equipment and procedures being implemented under INTEROPERATE.

Residence training in the following meteorological subjects would be held at regular intervals, usually not more than once per year. Distance training course would of course be available on an as-needed basis. The instructors would be comprised of various specialists from RNMA who have in mind the specific needs of the meteorological community in Romania.

Climate Variability

A climate variability program would integrate research on climate and global change especially focusing on the impact of global change on weather conditions in Romania.

Convective Weather

This course would discuss the basic principles of warm season convective weather with the aim of improving the prediction of severe weather.

Emergency Management

This would describe the involvement of RNMA as part of an Emergency Management function. A review of meteorological events that would trigger an Emergency Management function would be discussed, detailing the RNMAs role in Emergency Management.

Hydrology/Flooding

This would describe various elements of hydrology, such as, runoff processes, stream-flow routing, and urban flooding. The importance of anticipating hazardous weather and the associated community risk should be discussed.

Mesoscale Meteorology*

This course would describe and discuss mesoscale meteorological processes that are important in Romania and the region in general. Mesoscale convective systems and the use of radar in mesoscale analysis would be reviewed.

NWP (Modeling)

This course would describe the model fundamentals focusing on the models used in Romania. Each model will be discussed and fully characterized. Such things as Ensemble Models will be described with advantages and disadvantages thoroughly discussed.

Quantitative Precipitation Forecasting (QPF)

An overview of Quantitative Precipitation Forecasting will be provided. Synoptic and Meso-scale phenomena that contribute to high QPF will be reviewed, especially in the vicinity of mountains where orographic enhancement can create more precipitation than is forecasted from NWP models.

Radar Meteorology*

This would be a workshop on radar applications in Mesoscale Meteorology which will focus on severe weather and extreme precipitation episodes.

Satellite Meteorology*

A course in Satellite Meteorology will train the Meteorologist on feature identification using environmental satellites. An example of these features can be such things as cloud types to evidence of dynamic processes. Using satellite to validate NWP forecasts is a good subject of discussion.

Winter Weather

This will focus on winter weather conditions, and local forecasting techniques to help augment NWP predictions. Subjects such as icing assessment, and precipitation regimes based on trough characteristics are excellent topics.

Agro-Meteorology Modeling *

This will focus on the tools used for Agro-Meteorology, specifically models as well as surface observation network and implications of climate variability on long range predictions.

Air Pollution Meteorology *

This will introduce elementary air pollution measurements and parameters. Meteorological events that contribute to exceptional events will be discussed, along with the characteristics of models that are used for air pollution guidance in Romania.

2. Information Technology

With the addition of a supercomputer and various software solutions there will be training required for the staff that is responsible for maintaining the supercomputer and supporting sub-systems. Most, if not all, of this training would be available commercially from the entity that has provided the respective solution. It is suggested that there be at least two specialists trained in each subject areas. One specialist would serve a primary function for support, and the other specialists will be used in the event the primary specialist is not available. Specialists can also serve primary or secondary support functions in more than one area, especially those areas that are closely related, such as System Administration and System Programming.

A typical budget for training an IT staff in topics provided below would be on the order of $50,000 USD. This would not include staff time.

Supercomputer System Administration (Security and Operating System)

This would not be offered as a continuous training program, but rather training for at least two individuals that will be tasked with administering the supercomputer. It is suggested that the training be provided directly by the supercomputer manufacturer, and not through third parties.

Supercomputer System Operations

This would not be offered as a continuous training program, but rather training for at least two individuals that will be tasked with operating the supercomputer. It is suggested that the training be provided directly by the supercomputer manufacturer, and not through third parties.

Supercomputer System Programming

This would not be offered as a continuous training program, but rather training for at least two individuals that will be tasked with system programming on the supercomputer. It is suggested that the training be provided directly by the supercomputer manufacturer, and not through third parties.

Database Administration

This would not be offered as a continuous training program, but rather training for at least two individuals that will be tasked with database administration. It is suggested that the training be provided directly by the database supplier, and not through third parties.

Database Programming

This would not be offered as a continuous training program, but rather training for at least two individuals that will be tasked with database programming. There a shorter course provided by those using the database, and not necessarily

populating the database. It is suggested that the training be provided directly by the database supplier, and not through third parties.

Application Programming (FORTRAN, MPI-IBM, Parallel Systems Programming)

This would be offered on a continuous basis for the scientists involved in writing or modifying programs, in particularly numerical prediction models. It is extremely important that the scientist know how to efficiently program in order to take the best advantage of the supercomputer resources.

Web Programming (HTML, PHP, APACHE, JAVASCRIPT, CGI programming)

The Web interface has provided an excellent medium for the display of information and is widely accepted and used throughout the world. Web programming will provide a great assistance as a front end to the database, providing meteorological data dissemination. The Web can also be used as an interface to an online distance learning program, to carry out at least part of the expanded training suggested above for inclusion in INTEROPERATE.

E. Training Facility and Methods

It will be important to have a combination of both resident and distance training courses. Training should also strongly consider distance courses of other countries and communities, especially in the case where the equipment being used or the science being applied is identical to that of other countries. An example of this is the COMET program and specifically the Meteorology Education & Training program of the United States. Many of the courses, such as the theory of radar, or interpretation or radar would be applicable to scientists all over the world. If the RNMA would like to adapt the training to Romania or the general Eastern European region, the general framework of these courses can be adapted to regional weather issues.

Great gains can be made from a well structured distance learning program. This will allow every student to listen to the most effective instructor for a given topic. Students can review the material as needed. Though there are some drawbacks by not having the resident course interaction with other students, still a great deal of information can be conveyed through an effective online distance training course.

TASK 5

EVALUATION OF THE SOCIAL, ECONOMIC, ENVIRONMENTAL AND POLITICAL IMPACT GENERATED BY THE PROPOSED SYSTEM

TASK 5

EVALUATION OF THE SOCIAL, ECONOMIC, ENVIRONMENTAL AND POLITICAL IMPACT GENERATED BY THE PROPOSED SYSTEM

GENERALITIES

On the background of the climate change occurring at global scale, atypical and hazardous phenomena, dramatically intense, are being happening in Romania, especially in the latest years.

Thus, in 2005, floods from overflowing by water courses, discharges and damages to dams and small storages, water flows on mountain sides, as well as the hazardous weather phenomena (especially wind gusts, hail and thunder strikes) affected every county in Romania, along with 1734 localities. The overall damage value was estimated at 5,975,201.5 thou. RON (approximately 1,707,200 thou. Euro).
http://www.mmediu.ro/ape/inundatii%202005/raport%20cmsu.pdf

76 people were killed. 93,976 houses and households, along with 1063 economic units were damaged and more than 656,392 ha. of agricultural land were severely affected. The infrastructure suffered heavy damage, as follows, by categories: 9860.63 km of county and commune roads, 560.4 km of national roads, 2465.84 km of streets in localities, 2644.9 km of forest roads, 913 bridges and small bridges, 23.8 km of rail road, water supply networks, power and telephone networks.

There were also severely damaged 630 hydrotechnical buildings serving to the defence against floods, mainly dams, reinforcement and bank defence works, water flow regularizations, all requiring urgent restoring.

Forecasting and preventing the effects of hazardous meteo-hydrological events, as well as initiating programs to increase population safety - not only at national, but also at trans-boundary level are priorities of the Romanian Ministry of the Environment and Sustainable Development (MMDD), that has launched and approved for financing a series of programs for the management of crisis situations in the field of hydro-meteorology and waters, as are the projects SIMIN, DESWAT and WATMAN.

Implementing these national programs for management insurance in crisis situations specific to the field of environment protection and water management is performed within a unitary and integrated system, able to cover simultaneously the needs of as many national beneficiaries as possible – a solution that also ensures a better cost-performance ratio.

Through developing these national programs, it is being attempted to obtain significant performance concerning the following:

- precise detection in time and space of the meteorological phenomena, of the abundant precipitation amounts, of thunder strikes and storms, anticipation of hail events, so as to allow its timely suppression, anticipation of glazed frost, fog and other phenomena occurrences, hazardous to the transport activity;
- detection of turbulence, wind gusts, icing conditions, thunder strikes (critical to aviation);
- detection of the Black Sea and Danube state, as well as of the phenomena critical to the traffic (weather conditions, wave parameters, direction of the currents, visibility a.s.o.);
- early detection of smoke from forest fires and technological blasts;
- anticipation of atmospheric pollution dispersion, through developing air quality and pollution forecasts, resulting in the reduction of the impact exerted by the hazardous polluting activities on the environment;
- anticipation of high floods occurrence and of the areas likely to be flooded ;
- anticipation of extreme discharges and volumes for a proper management of the large storages and mitigation of the effects induced on the water supply services;
- etc.

The experience gained from the already achieved programs has highlighted the need to develop an information component apt to ensure the improvement of the processing capabilities with respect to the large volume and multitude of data and information resulted from the monitoring subsystems specific to the fields of meteorology, hydrology and water management and also the use of specialized computation systems, capable to perform mathematical modelling and numerical forecasting, on short and mean terms respectively, at local and national level.

In this context, the Feasibility Study named **INTEROPERATE** – "**I**Ntegrated Clima**T**ology, Agro-m**E**teo**RO**logical, Air-**P**ollution for**E**cast wa**R**ning, Comput**A**tion and **T**raining **C**entre"- attempts to be a component integrated in this unitary system of crisis situations management in the field of hydrometeorology and waters.

With this new component, Romania, through the Ministry of the Environment and Sustainable Development will round off its strategy in the field of meteorology and waters, adding a new dimension through the completion of a highly performing national modelling, processing and data-storing system, necessary for the elaboration of synthesis products and specific decision-making elements, at local, national and trans-boundary levels, for the management of hydro-meteorological crisis situations.

This new component, highly performing in using the most modern information technologies, will result in:

1. The increase of the climatological, atmospheric, agrometeorological and air quality data;
2. The implementation of a very powerful computation system (supercomputer), capable to lead to the improvement of the performance of the mathematical modelling and numerical forecasting over short and mean term respectively, for national demands and for use in a regional context;
3. The generation of new products, with added value, through information advanced processing and integration (with very powerful computation equipment, endowed with fast management capabilities with respect to specialized data bases);
4. The upgrading of the national agrometeorological monitoring system and obtaining specialized products necessary to mitigate the effects of agro-climatic changes and to identify those agricultural areas vulnerable to the hazardous meteorological factor effects;
5. The development of the national air-quality and pollutant transport forecasting system, the use of fine resolution physical-mathematical models necessary to the urban areas and the critical points, and also for the sites of the nuclear power plants.

SOCIAL IMPACT OF THE PROPOSED **"INTEROPERATE SYSTEM"**

The proposed system is a part of and adds efficiency and quality to the activity of the National Meteorological Administration in Romania, which, according to the law, applies the national strategy regarding the aerial environment monitoring, the scientific research and the supply of specialized services for the meteorological protection of life and property. http://www.inmh.ro/index.php?id=238 *(Government Decision no. 1405, Official Gazette no. 841 / 2004, for approving the National Meteorological Organizing and Functioning Regulations).*

Health and life will be subjected to a smaller risk. The components of the proposed system will lead to an increase of the quality and accuracy of the meteorological forecasts and warnings. Augmenting the number of observations and measurements through the component of developing the automated weather stations will result into better monitoring of the weather aspects (the Weather Watch Program), whereas the component for developing the computation power (supercomputer) will allow to approach local scale numerical modelling high resolution techniques, which will increase the lead time for anticipating the severe weather phenomena that cause big troubles to the people's life and activity.

Thus, indirectly, through implementing the components of the proposed system, hazards will be mitigated, as regards the health and life of the citizens of Romania from locations prone to flooding or damaging in the aftermath of extreme weather phenomena (storms, thunder strikes, catastrophic precipitation causing high floods etc.).

With timely and high-quality forecasts and meteorological warnings, specialists in hydrology will be able to issue earlier and more accurate flood warnings, which will increase the lead time available to evacuate the population to higher elevations.

Timely weather forecasts, warnings in situations when hazardous meteorological phenomena occur will supply decision-makers those elements necessary to pre-planning for emergency situations. Under these circumstances, proper locations will be established and chosen in due time, so as to serve as temporary shelters during evacuation actions and assistance will be given to people during the periods when their health and life are put to risk.

The authorities bearing responsibilities in the field of emergency situations assistance will be offer to supply other assistance types also, in a centralized manner, for instance – clean drinking water, food and heating for the affected citizens. This aspect might be important in preventing illnesses and deaths caused by diseases in the post-emergency period.

Increasing the computation power in the field of the weather forecasts will allow to approach advanced technologies (OPEN GIS) in numerical modelling for the dispersion of the pollutant transport, which will lead to the possibility to detect, track and issue warnings in due time on the evolution of atmospheric pollutants in critical situations (nuclear accidents a.s.o.).

This will allow decision-makers to take measures for eliminating the potential danger that the people's health would be affected in such situations.

Meteorological warnings and forecasts will become clearer and more accurate.

An objective of the proposed system is that data resulted from SIMIN be used completely, approaching new data-processing models. Following the increase of the computation power, meteorological forecasts and warnings will point at the severe weather situations earlier and will be more accurate and better spatially localized.

INTEROPERATE project, in correlation with DESWAT and WATMAN, will implicitly lead to an increase in the accuracy of the hydrological forecasts and warnings and surfaces affected by particularly severe floods will be better delimitated. This will allow the authorities to recommend or request only the evacuation of those areas really subjected to hazards and give the correct answer, in really exposed areas.

Developing the component concerned with modernizing the automated stations network will result in an increased number of measurements and the completion of the climatological statistical data series.

The proposed system will thus support the achievement of studies, in view to classify and delimitate certain areas prone to highly hazardous, severe weather phenomena.

All these will be additional elements to the preparation of the development plans and will allow better definition of flooding hazards to certain areas, enabling better decisions as regards emergency responses, post-emergency recovery and the long-term programs for the mitigation of flood-induced damages.

Better decisions will be taken, so as to substantially improve the life of residents subjected to hazards connected to events bearing an urgent character, as are especially floods.

Decision-making on the grounds of correct information is important, because detaining it allows more efficient use of available funds.

Correct and thoroughly substantiated analyses augment population confidence and the acceptance degree for any government program.

A concise, clear and easy-to-implement information/warning system

Flexibility of the proposed system and diversity of resulted information will lead to the establishing of certain concise, clear, and easy-to-implement standards on elaborating severe weather warnings and, implicitly, to the limitation of social effects on human communities.

An important objective of the system is to earlier issue more accurate weather warnings.

By using modern techniques to localize weather phenomena through georeferencing (OPEN GIS), the system to be implemented will be able to delimit faster and with better accuracy areas (localities, objectives etc.) that could be affected by certain severe weather phenomena (storms, tornadoes, abundant rain, thunder strokes etc.).

Thus, the system is able to issue precisely localized NOWCASTING warnings, which are entered into an automatic dissemination system, allowing decision-makers to take the most adequate steps and suggest or even request the evacuation of only the high-risk areas, responding correctly in those really endangered areas.

Also, the system makes possible the identification and classification of certain areas by risk degree, in order to be carried out emergency plans and risk-mitigation programs, such as those ensuring protection against floods.

The system allows us to elaborate clearer standards on NOWCASTING warnings (Warning by code of colours: RED, ORANGE, YELLOW) and to carry out an information system easily "accepted" by the general public.

SCIENTIFIC IMPACT AND ECONOMIC BENEFITS OF THE PROPOSED INTEROPERATE SYSTEM

Modernizing the weather observations and measurements network

The proposed INTEROPERATE system, modernizing its weather station network by implementing new automatic stations, will bring about significant economic benefits. A simple analysis shows us that acquiring an autonomous automatic station in standard configuration (hardware, software, communication equipment, system integration) costs around 15 000 Euro, while the annual mean costs for a standard weather station are of about 22-25 000 Euro (operating expenses, equipment, staff etc.).

This investment will be recovered in less than one year, expenses for operating autonomous automatic stations (maintenance/operation, IT&C staff) being far lower.

Development in Climatology

The monitoring techniques implemented within the proposed system shall be used in mitigating the negative severe weather impacts both on economy as well as on the agricultural

ecosystems of affected areas. Thus, improving the present-day agrometeorological monitoring network with new sensors to measure specific parameters and integrating obtained information within a support system will ensure an operative information system and a basic scientific assistance in decision-making on the occurrence and extension of agricultural risks.

Real-time evaluating and monitoring of agrometeorological risk factors (drought, heat, in-soil water excess/deficit, etc.) and their mapping on our country's agricultural territory over the season of crop vegetation allow us to identify in due time the most vulnerable agricultural areas and disseminate information to users (farmers, decision-makers in agriculture), in order for them to take adequate steps (irrigations, fertilizing, agricultural techniques to maintain in-soil water etc.).

This project will improve the monitoring of agricultural parameters, by using highly efficient techniques and methods (mathematical modelling, GIS, remote sensing), particularly for evaluating the condition of crop vegetation, moisture and dynamics of in-soil water deficit, in order to assure the best agricultural management.

Developing air quality and pollution forecasts is very important as it is an entirely new field in Romania. Expected impact is high because certain industrial (polluting industries) and social sectors (urban planning, municipalities) could derive a benefit from their development.

Having got a daily forecast of each industry's polluting potential as well as of the traffic impact, strategies could be developed to reduce the environmental impact of severely polluting activities. Situations of risk and extreme danger (including terrorist threats that involve certain chemical products and radioactive materials) can be scientifically approached, but as regards this field some work still needs to be done in the new NATO member, Romania.

As to the structural development and capacity building, this project is expected to develop and mostly use highly specialized IT&C staff (software-hardware engineers, applied electronics engineers to maintain the automatic weather stations, database administrators, WEB specialists, programmers etc.).

At the same time, the project will be an additional support for initiating new externally-financed projects, an explicit contribution to the international meteorological community's life, and a strong focal and *de facto* position in the (sub-) region.

As a matter of fact, the pressing demand of experts is estimated to have a significant impact in related domains, as meteorology presents a wide range of interdisciplinary connections, wherein well-trained experts in meteorology are highly appreciated.

The increase in computing power and in automatic weather data processing capacity shall be focused on two directions: a super-computer and the storing and database system. A super-computer will make possible the full use of numerical forecasting models, allowing further improvements.

Better numerical weather forecasts will have a significant impact upon related fields, because model results are then used as inputs for hydrological, climatologic, agrometeorological, and pollutant transport models.

The super-computer is connected to a database storing system in order to process data. This entity, generically called *Data Storing Centre,* should be unitary and provide a simple and fast access to data: from numerical weather forecasting models to climatic studies and programs to access the national weather data fund.

At present, an ORACLE database system is used in storing data (only for surface observations across Romania). It particularly includes historical climatologic information which is validated before storing, this data type being the only rational database management system. Other data are stored in several computers, under various operating systems, on magnetic support.

The new storing system will provide a unitary data access and management. It will ensure a fast and direct access to every information type, for operational and researching activities, as well as for clients. In addition, considering the diversity of operating systems and data in present-day meteorology, the proposed project will provide capabilities to integrate these data into a unitary database system.

ANALYZING A POSSIBLE IMPACT UPON THE ENVIRONMENT

The climatologic component (modernizing the meteorological observations and measurements network) has no adverse or beneficial impact on the environment.

The agrometeorological component. As to this component, the proposed project has a positive impact upon the environment.

Properly applying the agrometeorological knowledge and information, including agrometeorological forecasts, will be of great help to the agricultural community in developing and operating sustained agricultural systems and will increase yields in a beneficial way as regards the environment.

The air quality sub-component will have a beneficial and significant impact upon the environment. More than any other system component, this sub-component aims to improve the statute of the atmospheric environment, working as a feed-back for polluting industries and describing the potential threats of pollutant emissions upon the environment. Using the system on extended national level, in the "hot" air quality points, is estimated to have a major impact on decreasing pollutant emissions, by warning polluting units in order to take proper steps when atmospheric conditions could affect air quality.

Local Environment Protection Agencies will directly benefit by these forecasts and, being legally capacitated when the environment faces such risks, it should be emphasized that they shall act as authorities in charge with discouraging high emission levels. When the proposed system becomes operational, polluting industries shall be pressed to invest part of their profit in the improving of technological processes so as polluting emissions could be significantly reduced.

Through the results of this component, situations when polluting agents could maintain that certain unfavourable atmospheric conditions explain the high air pollution concentrations will be solved.

The Super-computer and Database component has no adverse impact upon the environment, as far as the studies carried out in this field show. There is no potential threat to the environment, due to using computerized calculation techniques. An indirect benefit can still be mentioned, as the super-computer facilitates the use of several environment simulation models, including air quality and pollution ones, being capable to improve our capacity of monitoring, estimating, and forecasting potential threats to the environment.

TASK 6

CONSULTATIVE NATIONAL WORKSHOP FOR ASSESSING THE PROPOSAED METEOROLOGICAL SYSTEM AND SUBSYSTEMS

MINISTERUL MEDIULUI ŞI GOSPODĂRIRII APELOR
ADMINISTRAŢIA NAŢIONALĂ DE METEOROLOGIE R.A.
Şos. Bucureşti-Ploieşti 97, Bucureşti 013686, ROMÂNIA
Tel.: +40-21-316.31.16 Fax: +40-21-316.31.43
e-mail: relatii@meteo.inmh.ro http://www.inmh.ro

LIFE00 ENV/RO/000106 Project

Development of a monitoring and warning system for the impact of air pollution on the urban environment – AIR AWARE

Program of the LIFE-AIR AWARE Launching Conference 27 April 2007, Marriott Hotel – "TIMIŞOARA" hall

9.00 - 9.15	Welcoming and registration of participants	
9.15 – 9.30	Opening address on behalf of the National Meteorological Administration	**Dr. Ion SANDU** Director-General
9.30 -10.15	AIR AWARE project presentation Objectives. Estimated results	**Dr. Mihaela CAIAN** AIR AWARE Project Manager, NMA
10.15 – 10.45	Mesaj from central and local authorities regarding the project's usefulness and benefits	**Representatives of local and central authorities**
10.45 – 11.30	**Press conference / Coffee break**	
	Partners in AIR AWARE project and their role	
11.30 – 11.50	Presentation of the Bucharest Environment Protection Agency BEPA role as Partner in AIR AWARE project	**Carmen STUPARU** Executive-Director, Bucharest-EPA **Sanda PETRIŞOR** AIR AWARE Project Responsible
11.50 – 12.10	Presentation of the Urban and Metropolitan Planning Centre - Bucharest UMPCB role as Partner in AIR AWARE project	**Arh. Doina Marilena CIOCANEA** Director, UMPCB **Rodica GHEORGHE** AIR AWARE Project Responsible
12.10 – 12.30	Presentation of the Public Health Authority - Bucharest PHAB role as Partner in AIR AWARE project	**Director of PHAB...** **Dr. Maria NIŢESCU** AIR AWARE Project Responsible
12.30 – 12.50	Presentation of the Institute of Biology – the Romanian Academy IB role as Partner in AIR AWARE project	**Director of IB...** **Marilena ONETE** AIR AWARE Project Responsible
12.50 – 13.00	Presentation of METEO France METEO France as Partener in AIR AWARE project	**Eric BRUN** Research-Development Director **Joel POITEVIN** AIR AWARE Project Responsible
13.00 - 14.00	***Lunch break***	
14.00 – 14.30	Associates / Data suppliers in AIR AWARE project	**Representatives of the Industry & Health network**
14.30 – 14.45	International projects developed by the National Meteorological Administration Innovation.Results.Perspectives.	**Dr. Ion Victor PESCARU** Scientific Director, National Meteorological Administration
14.45 – 15.00	INTEROPERATE Project – necessity for a feasibility study concerning SIMIN development. Objectives.	**Dr. Gheorghe STĂNCĂLIE** Executive-Director, National Meteorological Administration **Ion POIANA** NSM Director National Meteorological Administration
15.00 – 15.20	INTEROPERATE – Feasibility Study. Components and Results	**Sinisa SIROVICA** **David PRITCHARD** Burgess&Niple experts - SUA
15.20 – 15.35	Meteo Database - important component in INTEROPERATE Project.	**Aurelian POPA** WinDigit
16.00 – 16.30	***Coffee break***	
16.30 – 17.30	Debates	
17.30 – 18.00	Conclusions	

LIFE-Mediu acorda sprijin financiar actiunilor demonstrative inovante ale activitatilor economice si autoritatilor locale, precum si actiunilor pregatitoare in vederea sprijinirii legislatiei si politicilor comunitare.
http://ec.europa.eu/environment/life/life/environment.htm

MINISTERUL MEDIULUI ŞI GOSPODĂRIRII APELOR
ADMINISTRATIA NATIONALĂ DE METEOROLOGIE R.A.
Şos. Bucureşti-Ploieşti 97, Bucureşti 013686, ROMÂNIA
Tel.: +40-21-316.31.16 Fax: +40-21-316.31.43
e-mail: relatii@meteo.inmh.ro http://www.inmh.ro

LIFE AIR AWARE
LIFE05 ENV/RO/000106
AIR Pollution ImpAct Surveillance and WArning System for URban Environment
Proiect co-finantat de Uniunea Europeana
Programul LIFE-Mediu

LIFE-Mediu acorda sprijin financiar actiunilor demonstrative inovante ale activitatilor economice si autoritatilor locale, precum si actiunilor pregatitoare in vederea sprijinirii legislatiei si politicilor comunitare.
http://ec.europa.eu/environment/life/life/environment.htm

Interoperate
Slideshow Outline 4-07
D. Pritchard

Task 1
Assess the Existing Integrated System for Meteorological Surveillance Forecast, and Alert (SIMIN) in Romania,and Analyze Proposed Enhancements of 3 Subsystems (ISS-CLIMA, ISS-AGRO, ISS- AIR-POLUTE

and

Task 2
Propose Technical Solutions and Determine How Bust to Integrate the New and/or Enhanced Subsystems into the Existing SIMIN Infrastructure and to Implement the Required General Services

A – Initial Meeting and work plan

B - Model Usage for Existing and Future Conditions

Need to improve forecasts of severe weather events and achieve faster responses.

Models considered are ALADIN/AROME and COSMO/LMK models.

C – Numerical Weather Modeling in Romania – Current Situation

Now using ALADIN, HRM and MM5 models (Also LM ?)

(Summarize Each)

D – Future Plans for Numerical Weather Prediction

ALADIN Consortium (AROME)

COSMO (LMK Model)

WRF (Compared to old/MM5?)

E – Agricultural Models

Operational Models (SWB and CROPWAT)

Research Models

Soil Moisture Models

F – Database Management (Windigita)

Task 3
Computing Needs Assessment (MET-COMPUTE)

C. Assessment of Requirements and Current Capabilities
Computation Requirements, Data Storage Requirements
Current Capabilities

D – Proposed System

Task 4
Meteorological Training Needs Assessment
A – Background
B – Needs (Supercomputer, Databases)
C – Existing Courses
D – Training Assessment and Recommendations (Meteorology, IT)
E – Training Facility and Methods

Task 5
Conduct an Environmental, Developmental, and Regulatory Assessment of the Proposed INTEROPERATE Project.

INTEROPERATE

Meteorological Models and Computational Equipment Needs

INTEROPERATE Workshop

Presentation by: S. Sirovica, PE

D. Pritchard, PE

BURGESS & NIPLE

Bucharest, Romania

April 27, 2007

INTEROPERATE

- B & N INTEROPERATE TEAM:
  - Ohio Supercomputer Center
  - winDigita
  - Innovative Hydrology
  - 3-C Totalconsult

BURGESS & NIPLE

INTEROPERATE

Primary Project Goals:

- Assessing the Existing Integrated System for Meteorological Surveillance Forecast, and Alert System in Romania
- Analyzing Proposed Enhancements to the Forecast and Alert Systems

BURGESS & NIPLE

INTEROPERATE

GOALS

- ***Like for almost all National Meteorological Services, the main goal of ANM is the general improvement of the forecasts, especially for severe weather events.***
- ***Improved forecasts will provide a more accurate characterization of weather events (both in lead time, and magnitude).***

Radar national coverage in Romania

BURGESS & NIPLE

INTEROPERATE

Assessment of Needs and Current Capabilities (MET-COMPUTE)

Computation Requirements

Data Storage Requirements

Operational Requirements

Current Capabilities

BURGESS & NIPLE

INTEROPERATE

Computation Requirements

MM5, WRF, ALADIN, LM, AROME – All require a system with high memory bandwidth between processor and main memory

BURGESS & NIPLE

INTEROPERATE

Data Storage Requirements

Computing data and imaging data must be stored. (Operational and Archival) Desire 30 days of operational data. Archival data may be permanent.

BURGESS & NIPLE

INTEROPERATE

Operational Requirements

Redundancy and fault tolerance are critical because of wide areas subject to flash flooding, where immediate, reliable products are essential

During periods of critical threats or system faults, research applications will be interruptible in favor of operations

BURGESS & NIPLE

INTEROPERATE

Current Capabilities

Sun E4500 w/8 processors; Generic Linux cluster of 28 processors. Have 1.2 Terrabytes online. Offline storage is varied, and need a hierarchical storage management system.

BURGESS & NIPLE

INTEROPERATE

RNMA Existing Data Storage Pools

Project	*Current Capacity (GB)*	*Space Currently Used (GB)*	*Current Growth Rate (GB/month)*	*Projected Growth Rate (GB/month)*
Climatological Database	50	15	0.5	2
Forecast Data	~50	~50	31	100
Radar Data	~604	~604	25.4	25.4
Satellite Data	500	~500	100-150	100-150

BURGESS & NIPLE

INTEROPERATE

REQUIRED TECHNICAL SOLUTIONS:

Develop Technical Solutions and Determine How Best to Integrate the New and/or Enhanced Subsystems into the Existing Infrastructure and to Implement the Required General Services

BURGESS & NIPLE

INTEROPERATE

- **Proposed System Specifications**
  - *Vendor Compiler Support*
  - *High Memory Bandwidth*
  - *Redundancy and Fault Tolerance*
  - *Operational Data Lifetime of 30 Days*
  - *Hierarchical Storage Management of Archival Data*

BURGESS & NIPLE

INTEROPERATE

Typical Compute Node Configurations

	Minimal	*Recommended*
Number of Compute Nodes	8	16
Processors per Compute Node	8	8
Compute Node Processor Speed	2.2 GHz	2.2 GHz
Memory per Compute Node	32 GB	32 GB
Compute Node Network Interfaces	2x Gigabit Ethernet	2x Gigabit Ethernet

Note: A system achieving equivalent performance with a configuration different from the above would be equally satisfactory

BURGESS & NIPLE

INTEROPERATE

Typical Service Node Configurations

	Minimal	*Recommended*
Number of Service Nodes	2	4
Processors per Service Node	16	16
Service Node Processor Speed	1.9 GHz	1.9 GHz
Memory per Service Node	32 GB	32 GB
Service Node Network Interfaces	2x Gigabit Ethernet, 4x 2 Gbit/s Fiber Channel	2x Gigabit Ethernet, 4x 2 Gbit/s Fiber Channel

Note: A system achieving equivalent performance with a configuration different from the above would be equally satisfactory

BURGESS & NIPLE

INTEROPERATE

TRAINING NEEDS ASSESSMENT:

- Infuse developing science and technology into existing operations
- Maintain level of expertise current with national and international research
- Enhance and stimulate staff learning
- Assure effective use of existing and new equipment

BURGESS & NIPLE

INTEROPERATE

Training Program Categories for IT:

- Supercomputer – for operators, administration, users and maintenance
- Databases – for database and OS administrators, users and operators

BURGESS & NIPLE

INTEROPERATE

Training Program Categories for Meteorology:

- Climate Variability
- Convective Weather
- Emergency Management
- Hydrology/Flooding
- Mesoscale Meteorology*
- NWP (Modeling)
- Quantitative Precipitation Forecasting (QPF)
- Radar Meteorology and Nowcasting*
- Satellite Meteorology*
- Winter Weather
- Agro-Meteorology Modeling*
- Air Pollution Meteorology*

*Note - * indicates existing training program*

BURGESS & NIPLE

THE END

BURGESS & NIPLE

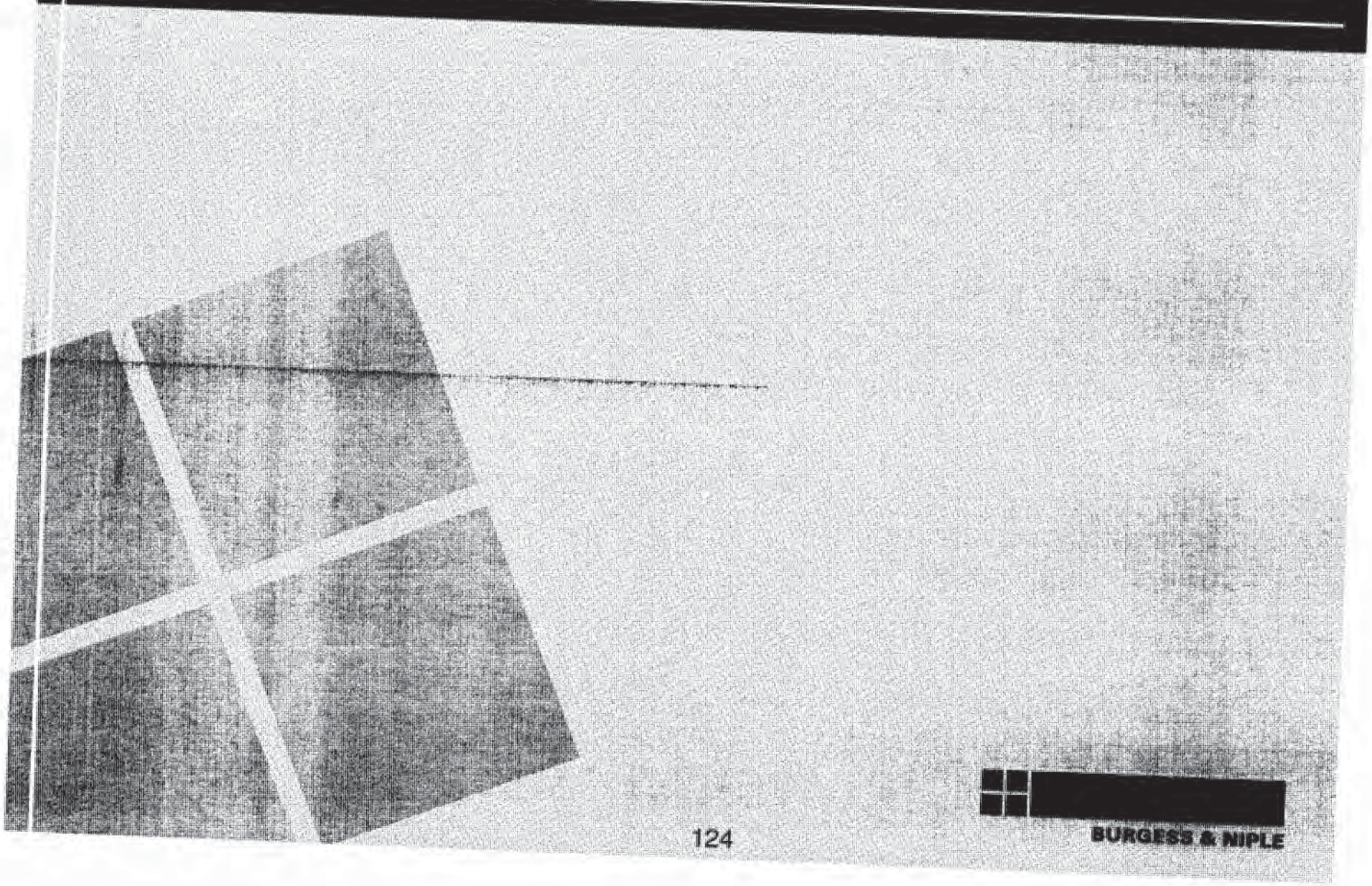

INTEROPERATE

Planned Processes and Products (very high resolution models – 2 to 3 km grids):

- AROME – Mesoscale model, non-hydrostatic with 2.5 – 3 km grid using 300 to 600 x the comp ability of ALADIN now
- COSMO Project (Local Model - LM) - tested at 2.8 & 7 km grid on generic LINUX cluster
- WRF – A non-hydrostatic mesoscale US model which is an improvement on the MM5 model of PSU

The INTEROPER[illegible] Project
Necessity for a feasibility study concerning the SIMJH development

[illegible]
Doina [illegible] Sophie [illegible]

Pollution Forecast and Warning, Computation and

- Since 2000, the RNMA (former NIMH) focused on implementing a new strategy to create a modern meteorological surveillance system, based on high technology. As such, the strategy has been initiated by two major investment Programmes: **SIMIN** (SIstem Meteorologic Integrat National) and **DESWAT** (DEStructive WATer Assessment and Control of Water Disasters).

- These two major programs have amounted to 55 Million USD and respectively 46 Million USD.

- The first RNMA investment project, SIMIN, addressed Romania's primary objective of modernizing and integrating the country's various resources and real-time detection capabilities, and also facilitated the exchange of data at the local, regional, and global levels.

- Within SIMIN, several systems with major significance have been provided:
  - Meteorological DOPPLER Radar Network – provided by Lockheed Martin and EEC;
  - Automatic Weather Network;
  - Lightning Detection Network;
  - Satellite Reception Stations for MSG;
  - Telecommunication Networks;
  - Visualisation System – Nex-REAP – integrating all available information.

- The project team successfully integrated state-of-the-art, commercial-off-the-shelf technologies and products building on Romania's existing meteorological infrastructure.

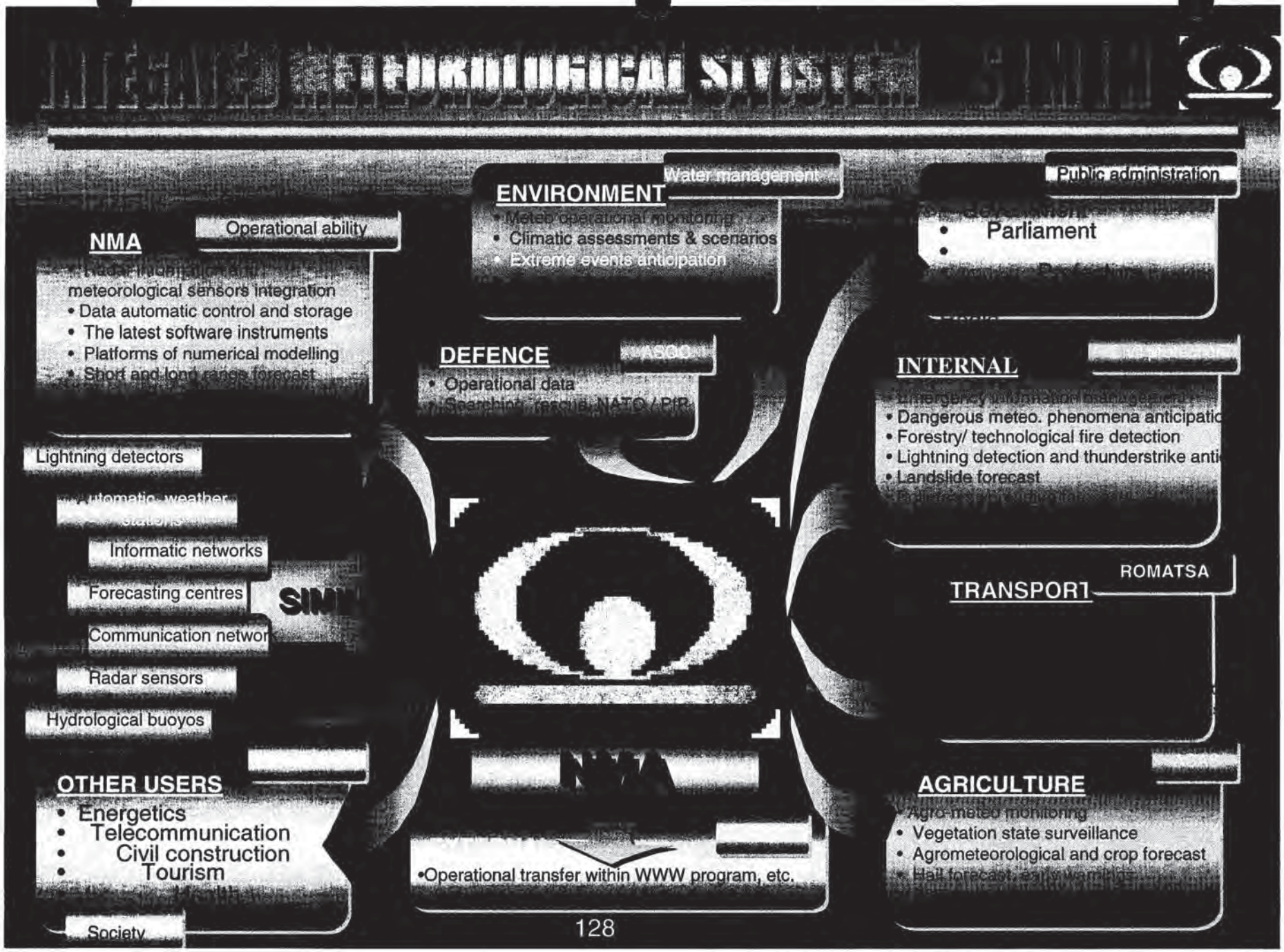

INTEGRATED METEOROLOGICAL SYSTEM
SIMIN
NMA
Operational ability
meteorological sensors integration
• Data automatic control and storage
• The latest software instruments
• Platforms of numerical modelling
• Short and long range forecast
Lightning detectors
Informatic networks
Forecasting centres
Communication networ
Radar sensors
Hydrological buoyos
OTHER USERS
• Energetics
• Telecommunication
• Civil construction
• Tourism
Society
ENVIRONMENT
Water management
• Climatic assessments & scenarios
• Extreme events anticipation
DEFENCE
• Operational data
NATO / PfP
•Operational transfer within WWW program, etc.
Public administration
• Parliament
INTERNAL
• Dangerous meteo. phenomena anticipatio
• Forestry/ technological fire detection
• Lightning detection and thunderstrike anti
• Landslide forecast
TRANSPORT
ROMATSA
AGRICULTURE
• Vegetation state surveillance
• Agrometeorological and crop forecast

INTEROPERATE project

- The INTEROPERATE project should complete, upgrade and enhance the functionalities of the SIMIN project, add essential data processing capabilities to Romania's integrated management system for meteorology, and should develop ongoing training programs for professionals in this field.

- The most important objectives:
  - Modernization and enhancement of the observation and processing subsystems for climatology;
  - Modernization of the agro-meteorological monitoring and forecast processes, and integrating them into a national system;
  - Modernization of atmospheric pollution monitoring and forecast processes and integrating them into a national system;
  - Development of a national meteorological data processing and storage center, encompassing data from SIMIN, DESWAT, and WATMAN;
  - Development of an ongoing training program for meteorologists, agro-meteorologists, and environmental experts, with appropriate facilities.

INTEROPERATE project (cont.)

- For each of these objectives, the envisioned results will be obtained by developing a number of specific subsystems and components, - part of the overall Integrated National Meteorological System:
  - Integrated Support System for Climatology (**ISS-CLIMA**) (currently, only part of the meteorological network is supplied with automatic stations equipped with sensors for actual weather reports)
  - Integrated Support System for agro-meteorological forecast and warning (**ISS-AGRO**) (the system will identify specific risks to crops in precise areas, measurably improving agricultural productivity)
  - Integrated Support System for air pollution forecast and warning (**ISS-AIR-POLUTE**) (air quality monitoring and installation of warning systems are increasingly important for Romania's pollution 'hot spots')
  - National Meteorological Computing Center (**MET-COMPUTE**) (RNMA has considerable expertise in numerical weather prediction [NWP] which it is unable to capitalize on due to lack of processing power; the center will allow Romania to fully participate in the development of European models)
  - National Meteorological Training Center (**MET-TRAIN**) (as the Romanian education system in the meteorological domain has severe gaps, ongoing training programs are essential)

- RMNA elaborated a project proposal for U.S. Trade and Development Agency (USTDA) granting.

- The Grant Agreement was entered into between the Government of the U.S.A., acting through the U.S. Trade and Development Agency ("USTDA") and the Romanian National Meteorological Administration. USTDA agreed to provide the Grantee US$340,100 ("USTDA Grant") to fund the cost of goods and services required for a feasibility study on the proposed Integrated Climatology, Agro-Meteorological, Air Pollution Forecast and Warning, Computation and Training Center (INTEROPERATE) Project in Romania.

- Technical proposals have been solicited from interested and qualified U.S. firms.

- Selection of the U.S. Contractor have been carried out by the Grantee according to its established procedures for the competitive selection of contractors with advance notice of the procurement published online through *Federal Business Opportunities*.

- Burgess & Niple, Inc. (B&N) was awarded a contract (started on 30th of April 2005) to prepare the feasibility study, with assistance from subconsultants: Innovative Hydrology and The Ohio State University/Ohio Supercomputer Center of the United States, and 3CTotalConsult and WinDigita of Bucharest, Romania.

Terms of Reference

- The Romanian Government is currently attempting to implement an integrated management system for meteorology on a national level.
- The INTEROPERATE feasibility study seeks to build upon, complete, and integrate data from a series of previous initiatives [the National Integrated Meteorological System (SIMIN), the Destructive Waters Forecasting System (DESWAT), and the Integrated Water Resources Management System (WATMAN).
- Specifically the INTEROPERATE project would upgrade and enhance the existing SIMIN infrastructure, and would also add computing power, data storage capacities, and communications infrastructure in order to collect, integrate, and analyze data generated from the SIMIN, DESWAT, and WATMAN projects, increasing the effectiveness and benefits of all three.
- The INTEROPERATE project seeks to form the core element of Romania's planned National Crisis Management System.

Termes of References

- **Task 1:** Assess the existing integrated system for meteorological surveillance, forecast, and alert (SIMIN) in Romania, and analyze proposed enhancements of three main subsystems (ISS-CLIMA, ISS-AGRO, ISS-AIR-POLUTE).
  - **Deliverable** : A report containing an overview of the existing meteorological surveillance system as well as observations and conclusions on the three sub-systems analyzed.
- The equipment to be procured under Task 1:
  - Sensors for present weather - compatible with the existing automatic stations.
  - Mobile automatic weather station for agro-meteorology.
  - Background air pollution measurement station

- **Task 2**: Propose technical solutions and determine how best to integrate the new and/or enhanced subsystems into the existing SIMIN infrastructure and to implement the required general services.
  - **Deliverable for Task 2**: A report containing recommendations and technical solutions for an enhanced integrated meteorological surveillance system, with separate sections for each of the three sub-systems and the required general services is required for Task 2.
- **Task 3:** Computing needs assessment (MET-COMPUTE)
  - **Deliverable for Task 3:** A report containing recommendations and technical solutions for the most appropriate High Performance Computing System as well as for an optimal data processing and storage facility for the RNMA's needs and capacities.
- **Task 4**: Meteorological training needs assessment (MET-TRAIN)
  - **Deliverable for Task 4:** A report containing hands-on training to RNMA staff on the proposed integrated meteorological surveillance system, including the data processing and storage component.

- **Task 5**: Conduct an environmental, developmental, and regulatory assessment of the proposed INTEROPERATE project
  - **Deliverable for Task 5:** A report containing a review of the Project's environmental impact upon implementation and any effect it will have on residents in affected areas.
- **Task 6**: Organize a consultative national workshop for assessing the proposed meteorological system and subsystems.
- **Task 7**: Assess the required equipment and associated investments for the INTEROPERATE project, and develop a phased implementation plan.
- **Deliverable for Task 7:** Assessment of the system's requirements for data and equipment, including measurement, data transmission, collection, storage, and processing.
- **Task 8**: Prepare a Final Report

operations & research

❑ Atmospheric Models

- meso-scale numerical weather prediction models
- ensemble prediction system (very poor)
- climatic regional models
- trajectory models
- statistical adaptation models

❑ Wave and Sea Circulation Models

❑ Air Quality Models

❑ Agro-meteorological Models

❑ Snow Layer Evolution Prediction Models

computing platform – present

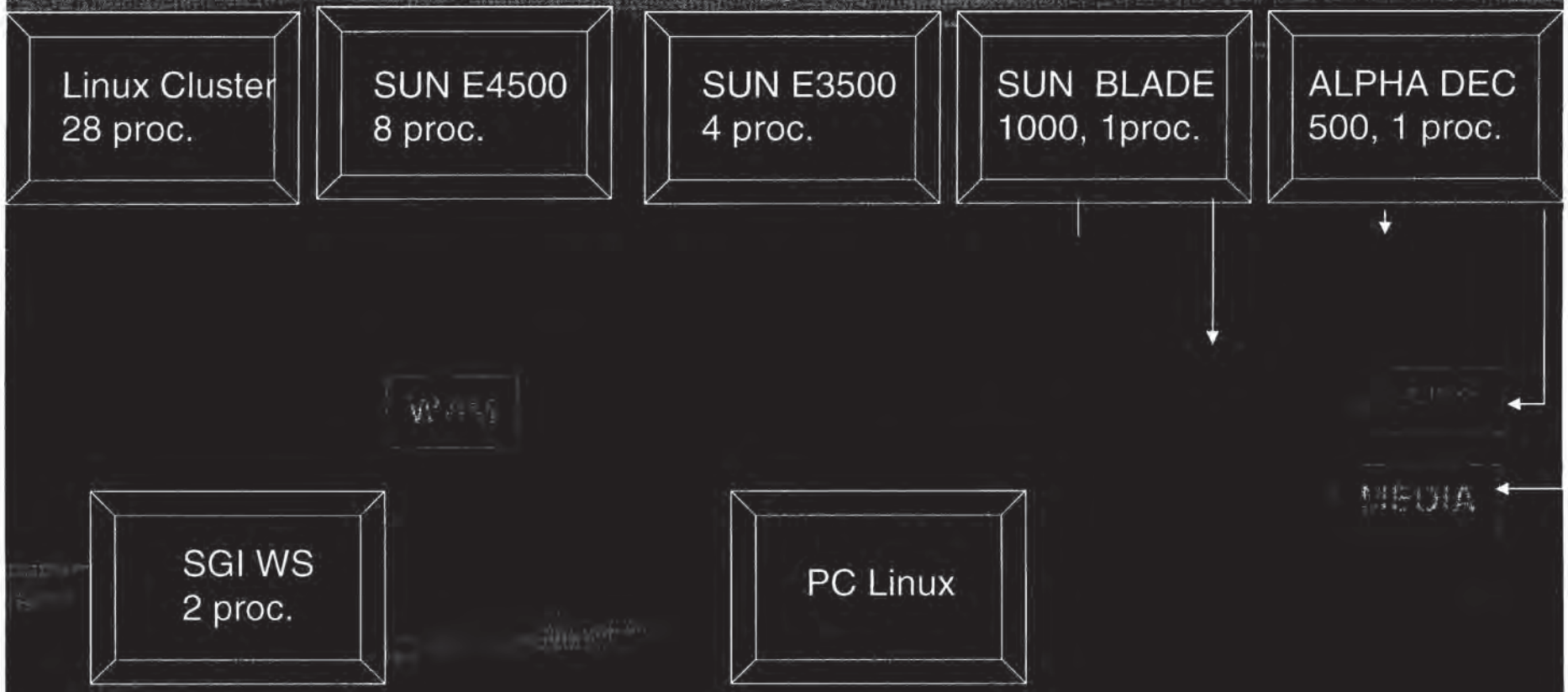

- mainly for atmospheric models -

Numerical modelling RNMA objectives

- General improvement of weather forecast
- Special emphasis on severe weather forecast
- Better response to environmental accidents

National Meteorological Administration
- atmospheric models needs -

computing system solution

- Comply to the present and near future needs for:
  - ✓ the forecast system accordingly to the operational time schedule
  - ✓ research and development activities

Forecast Production Schedule

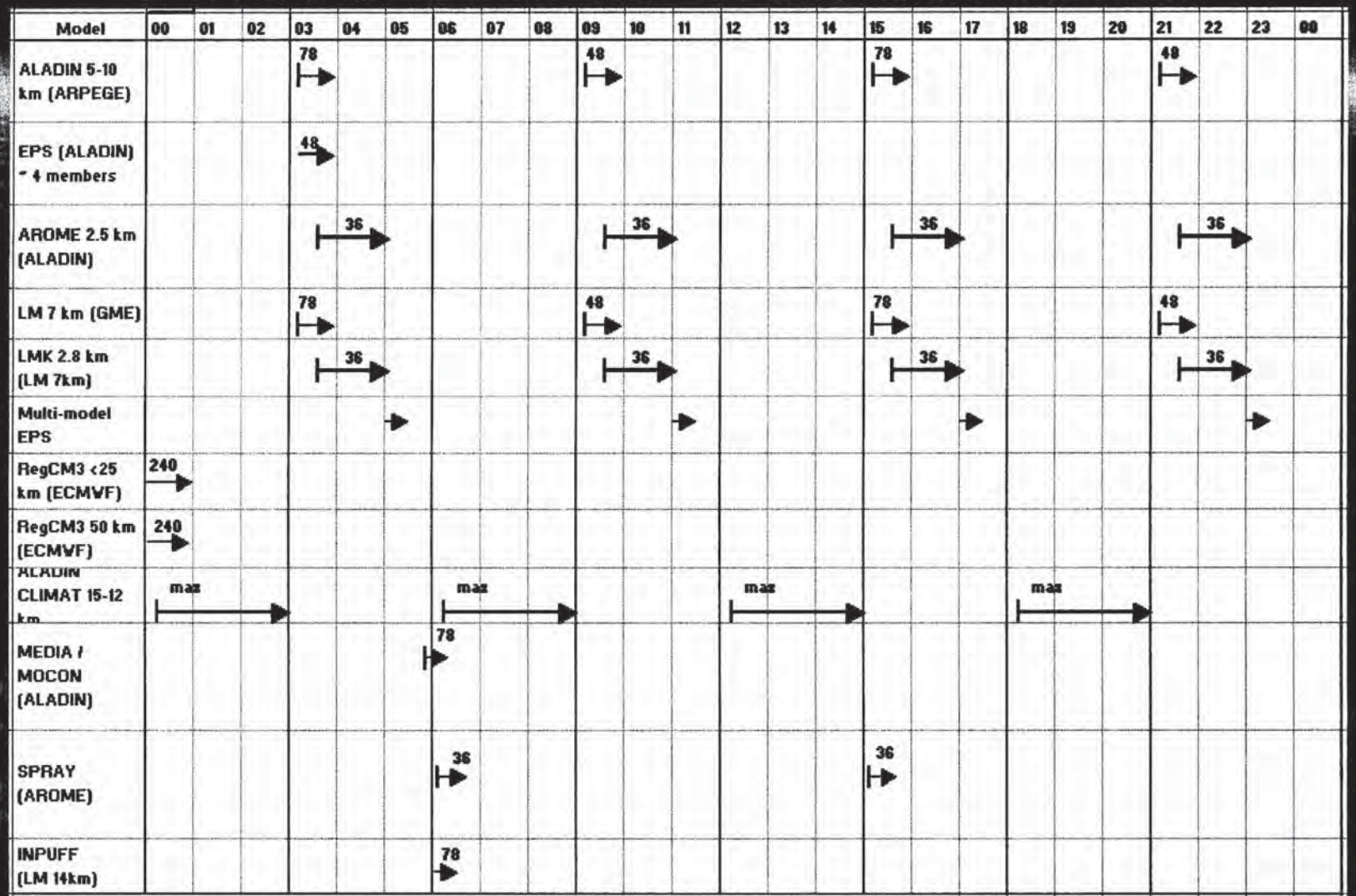

Initial/lateral BC in red. Arrows are showing the start/end time of each modles, imposed by the operational constraints.

Arrows are showing the start/end time of each modles, imposed by the operational constraints

red: not absolutly necessary at the first stage

green: research mode

Types of meteorological data

- **"National Surface" observation data** collected at the Regional Centres from observation stations. At the Regional Centres data files are transferred to Bucharest through the Communication Gateway, stored in MS SQL Server and then stored in the Oracle "Climatological" database.

- **"Vertical atmospheric data profiles"** collected from radiosounding stations.

- **Radar data** collected from eight radars and there is a need to capture data from NEXRAD format.

- **Satellite data** – RNMA receive in real time manner numerical data and images transmitted by geostationary meteorological satellites (MSG1 – first METEOSAT of the second generation; METEOSAT-7), NOAA/AVHRR satellites and EPS satellites.

- **National network of electrical discharges (SAFIR)** – International surface and upper air data is stored in a collection of files in alphanumeric format.

Types of unstructured data

- **Models Output** – All the output of the models is partially stored on DVDs or CDs. RNMA personnel of every department consumes time with this activity (burning the media, labelling and archiving the DVDs/CDs)

- **GIS Data** – the existing GIS information are categorized on interest fields, represented on several scales (1:5000, 1:25000, 1:50000), containing diverse information (hydrological network, road network, railways network, cities, use/covering of lands/fields, hidrotechnical constructions, numerical model of lands/fields). The storage of information (e.g. shapefiles) is on CDs. Current licenses of RNMA for GIS package don't permit access to meteorological parameters stored in RDBMSes.

- **International Data** – from GTS.

Existing Databases System

Now, our organization have two databases, that continent only operational and historical National Surface Observation Data:

- **Oracle Climatological Database**
- **Ms SQL Server - National Operational Collection Database**

The next slide shows databases used inside NMA and data flows for these.

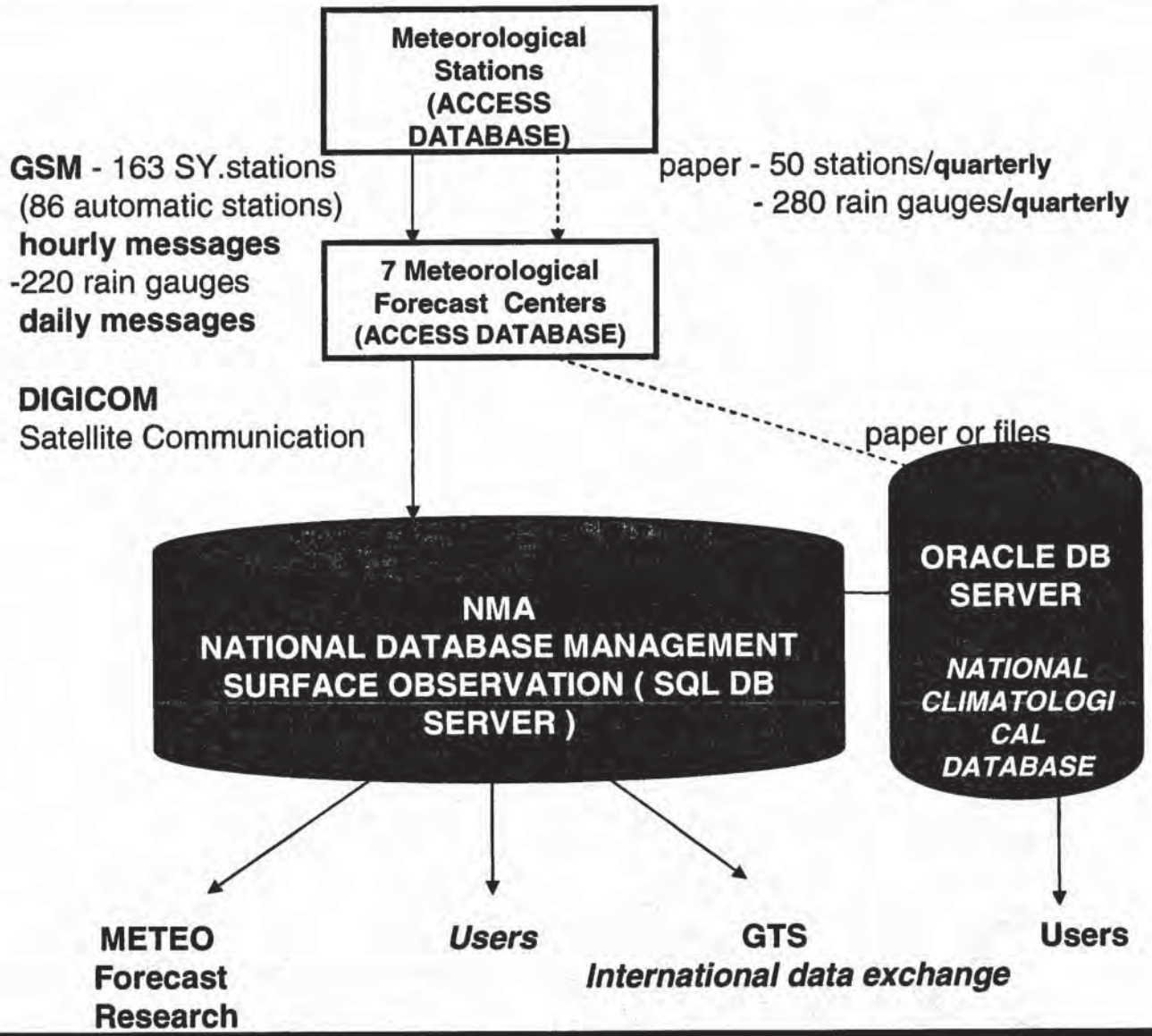
Meteorological Stations (ACCESS DATABASE)
GSM - 163 SY.stations
(86 automatic stations)
hourly messages
-220 rain gauges
daily messages
paper - 50 stations/quarterly
- 280 rain gauges/quarterly
7 Meteorological Forecast Centers (ACCESS DATABASE)
DIGICOM
Satellite Communication
paper or files
NMA
NATIONAL DATABASE MANAGEMENT
SURFACE OBSERVATION (SQL DB SERVER)
ORACLE DB SERVER
NATIONAL CLIMATOLOGICAL DATABASE
METEO
Forecast
Research
Users
GTS
International data exchange
Users

Objectives 2

All types of structured data must be managed in binary format (GRIB, BUFR, etc ...) using a operational meteorological database ROMDB (Romanian Operational Meteorological Database) which must be integrated with HPC's storage solution.

- The present data acquisition system should be upgraded to accommodate faster and more reliable data collection from the branch offices, using the newest technology on the market and with no changes to the existing SOP applications.

- On-line access to all the data gathered at the ANM HQ: satellite data, radar data etc ... which should be stored and managed by means of the operational meteorological database (ROMBD).

Objectives - 2

- Integration of the future ROMDB and existing Climatological Database with a GIS solution (GIS server) that should also use the existing GIS data. The format of existing GIS data is ESRI specific.

- Upgrade of the Oracle DB Server which stores the Climatological Database (there is a need for extending the storage capacity and the processing capacity) in order to accommodate with the GIS Data.

The next slide presents a high-level diagram of the future system. Existing databases/elements are orange.

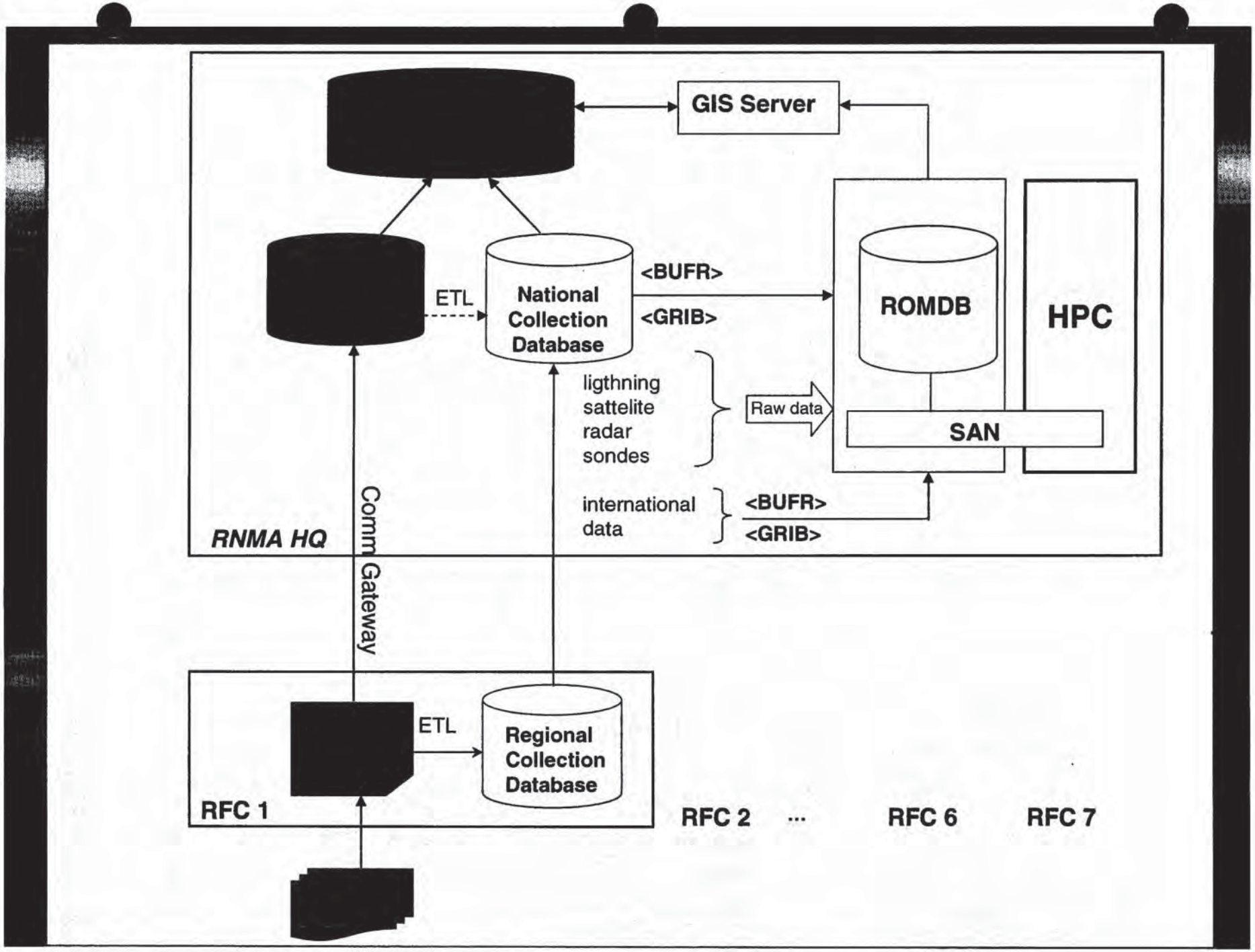
GIS Server
ETL
National Collection Database
<BUFR>
<GRIB>
ROMDB
HPC
SAN
ligthning
sattelite
radar
sondes
Raw data
international data
<BUFR>
<GRIB>
RNMA HQ
Comm Gateway
ETL
Regional Collection Database
RFC 1
RFC 2
...
RFC 6
RFC 7

DUV Open-Path Gas Analyzer

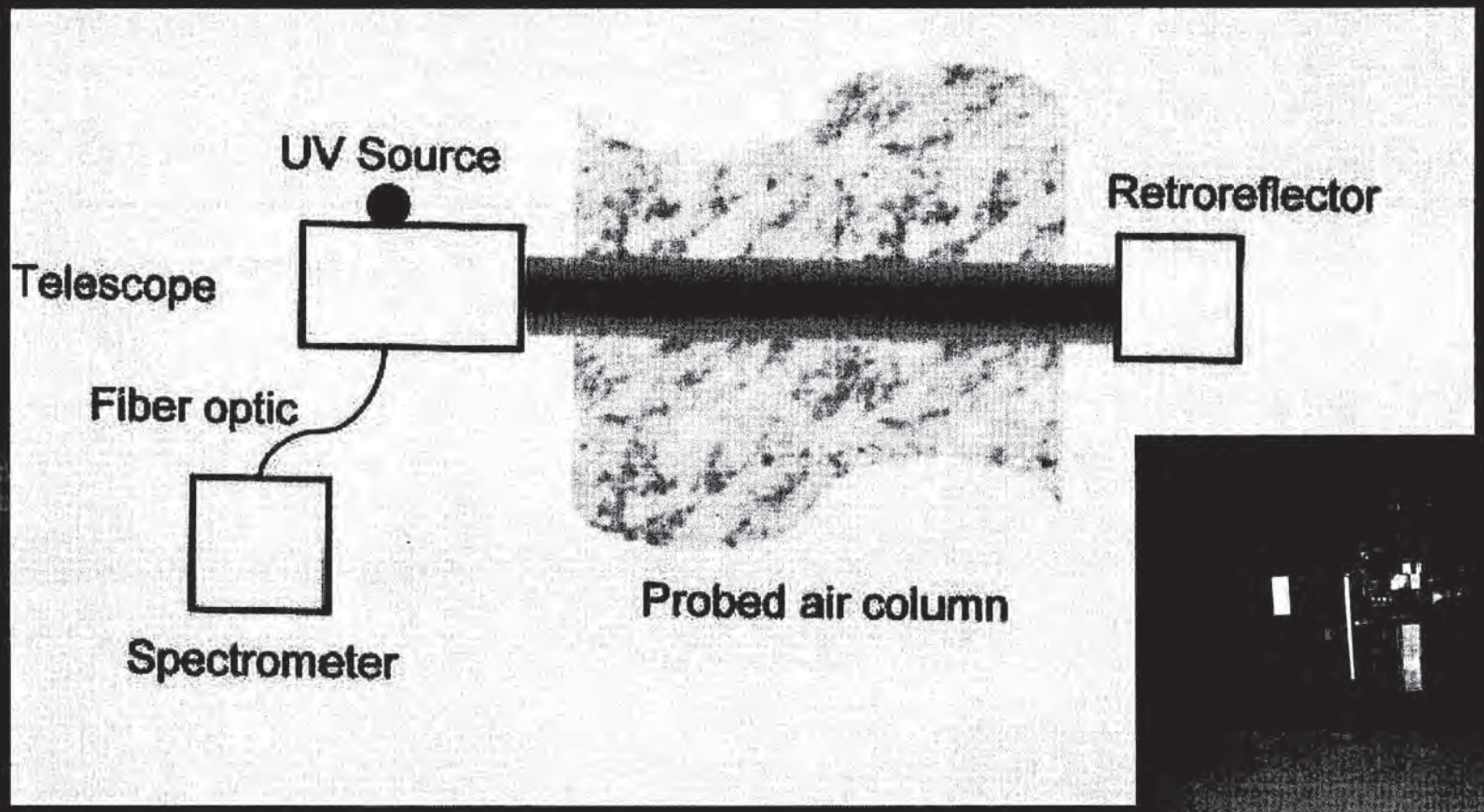

Vaisala PWD22

Present Weather Sensor – MAWS410

Vaisala PWD22

Measured data:

2007-04-24, 11:32:02,VALID,┌PW 1┐ 00 20000 20000 C 0 0 0 0.00 52.28 131└
,VALID,13.6368,

2007-04-24, 11:33:02,VALID,┌PW 1┐ 00 20000 20000 C 0 0 0 0.00 52.28 131└
,VALID,13.6368,

2007-04-24, 11:34:02,VALID,┌PW 1┐ 00 20000 20000 C 0 0 0 0.00 52.28 131└
,VALID,13.6368,

2007-04-24, 11:35:02,VALID,┌PW 1┐ 00 20000 20000 C 0 0 0 0.00 52.28 131└
,VALID,13.6368,

2007-04-24, 11:36:02,VALID,┌PW 1┐ 00 20000 20000 C 0 0 0 0.00 52.28 131└
,VALID,13.6368,

Remote AWS

Campbell Scientific CR1000 (/sec/cs) for wind measurements

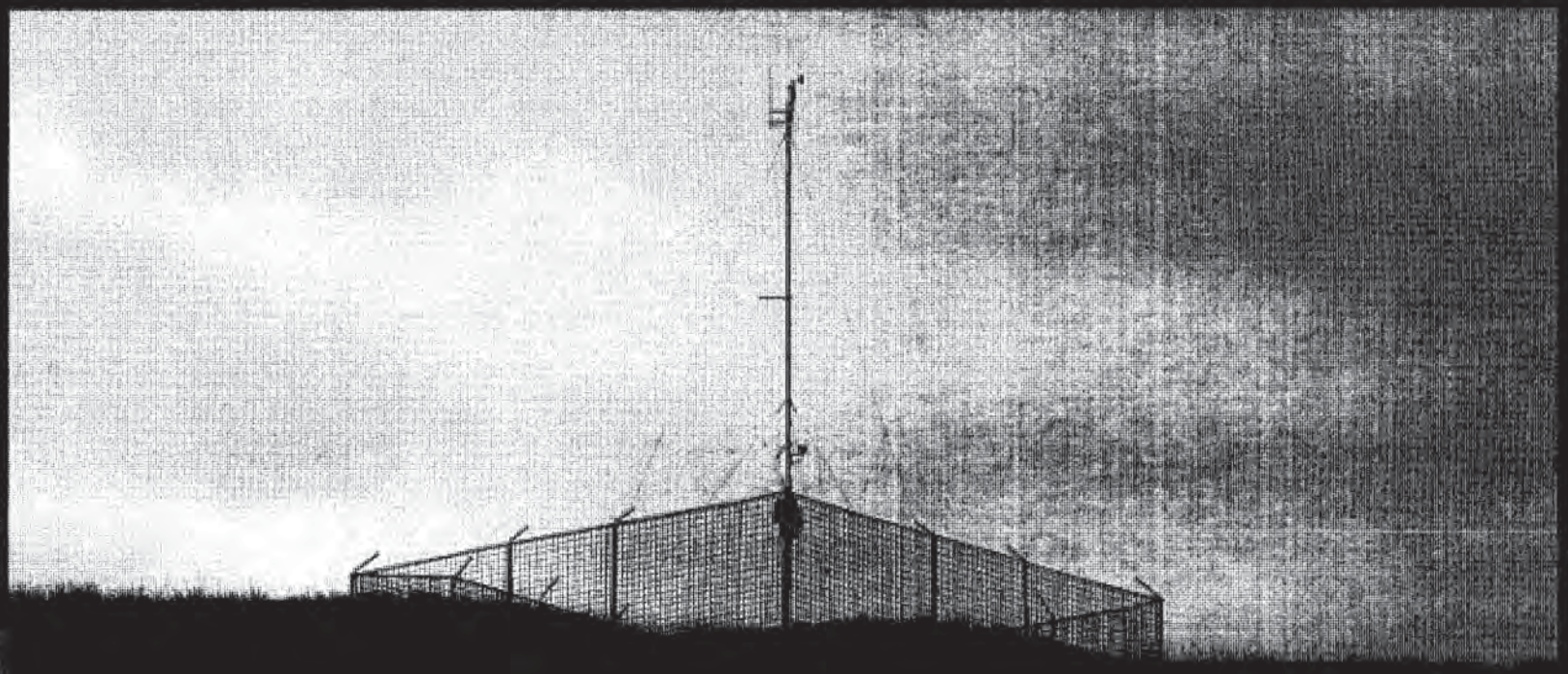

Remote AWS

Measured data: Air Pressure

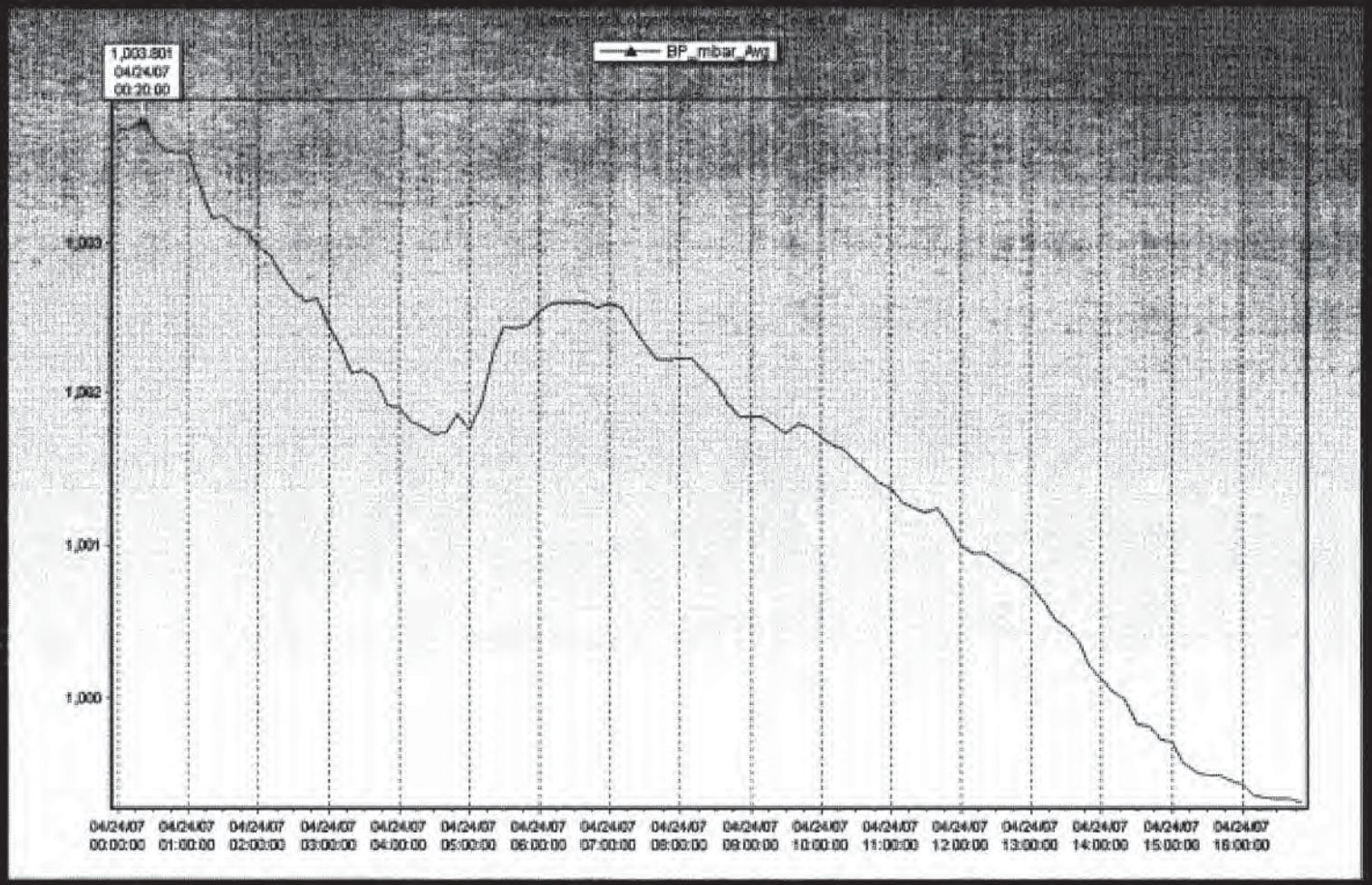

Remote AWS

Measured data: Air Temperature and Relative Humidity

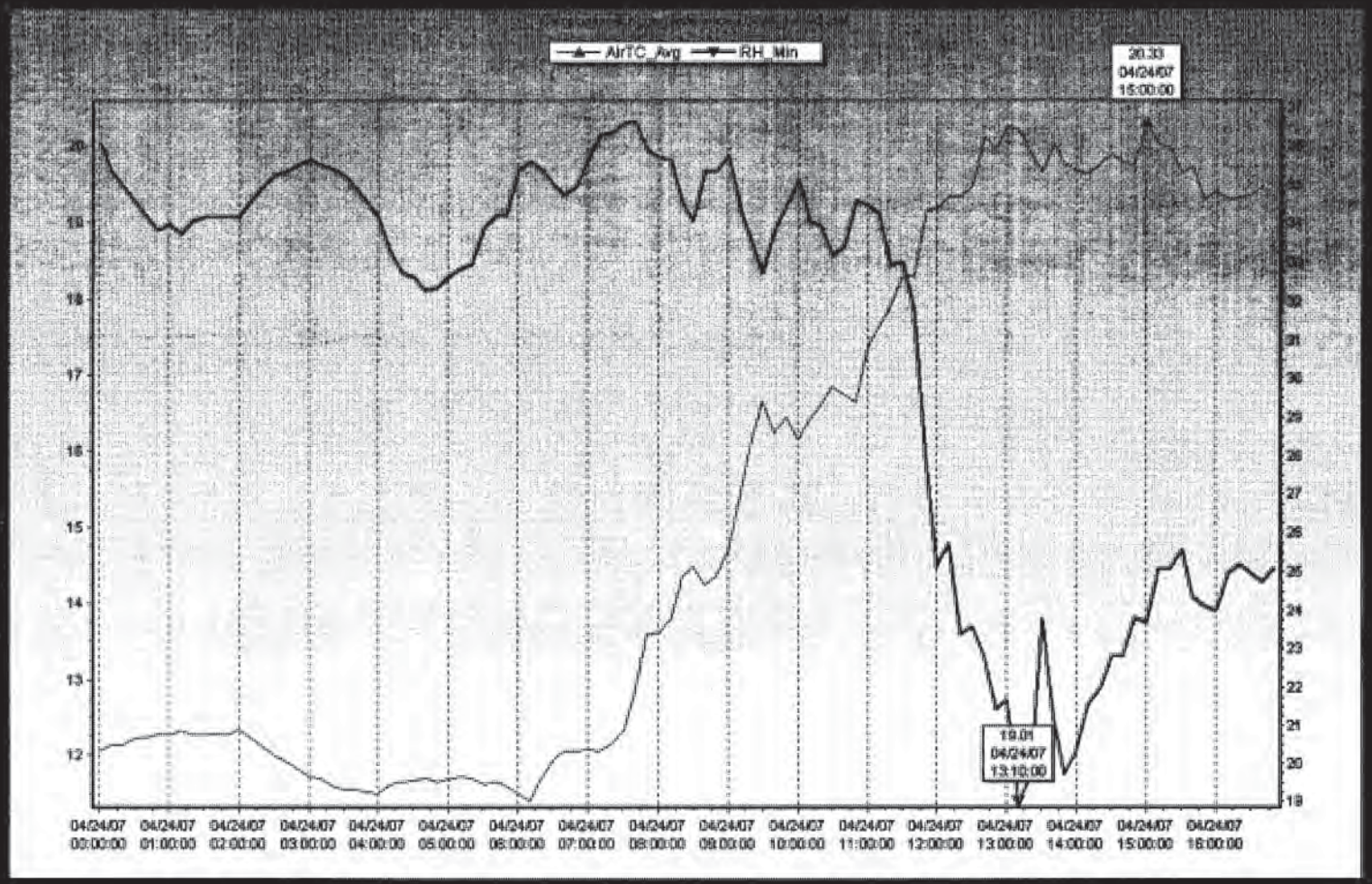

Measured data: Wind Speed and Direction

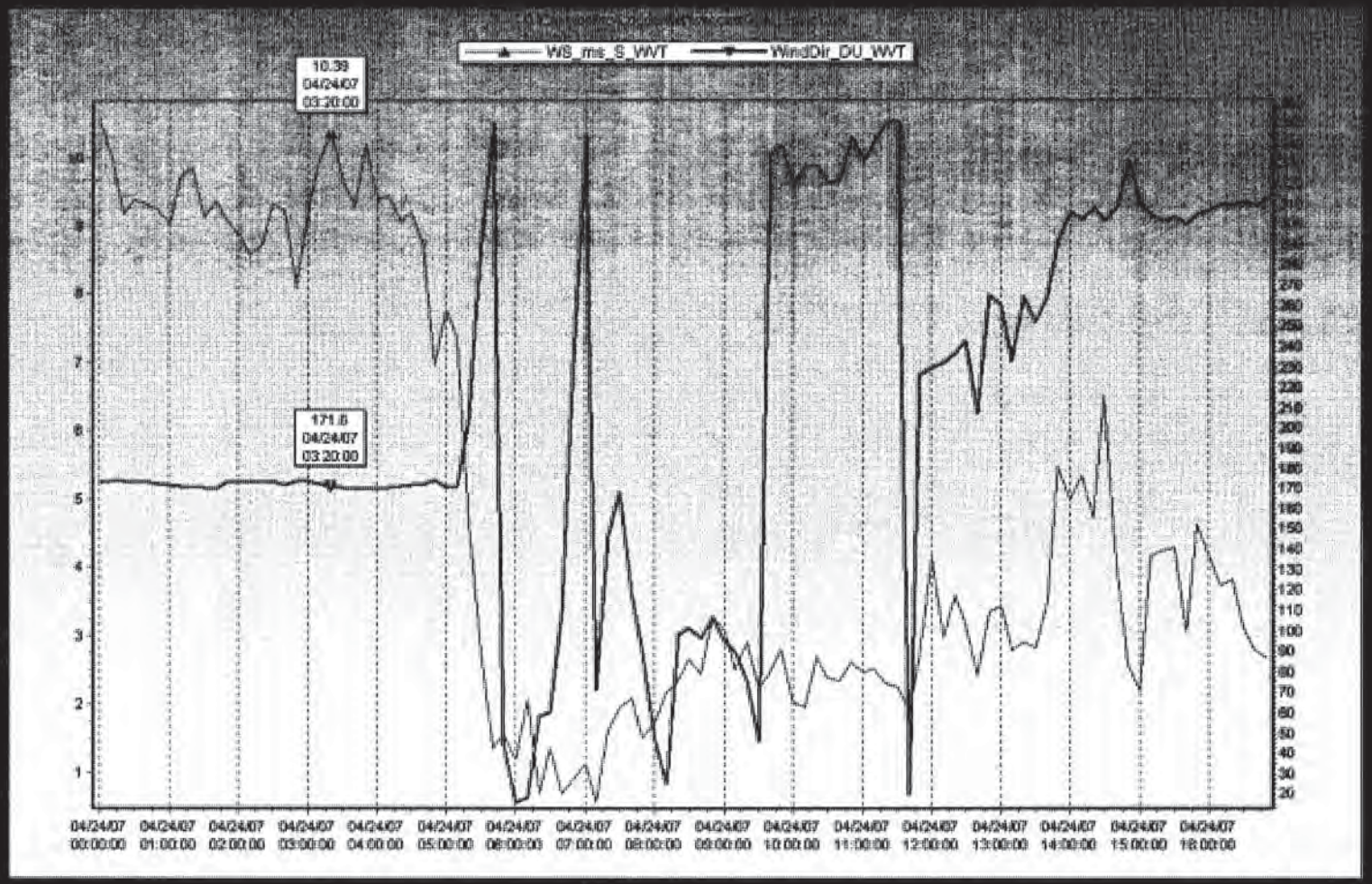

Romanian Operational Meteorological Database

Aurelian.POPA@winDigita.com
0722 21 21 01
www.winDigita.com

Agenda

- Existing System
- Requirements
- Human resources needs
- Transitioning system
- New system
- Conclusions
- Q&A

Existing System

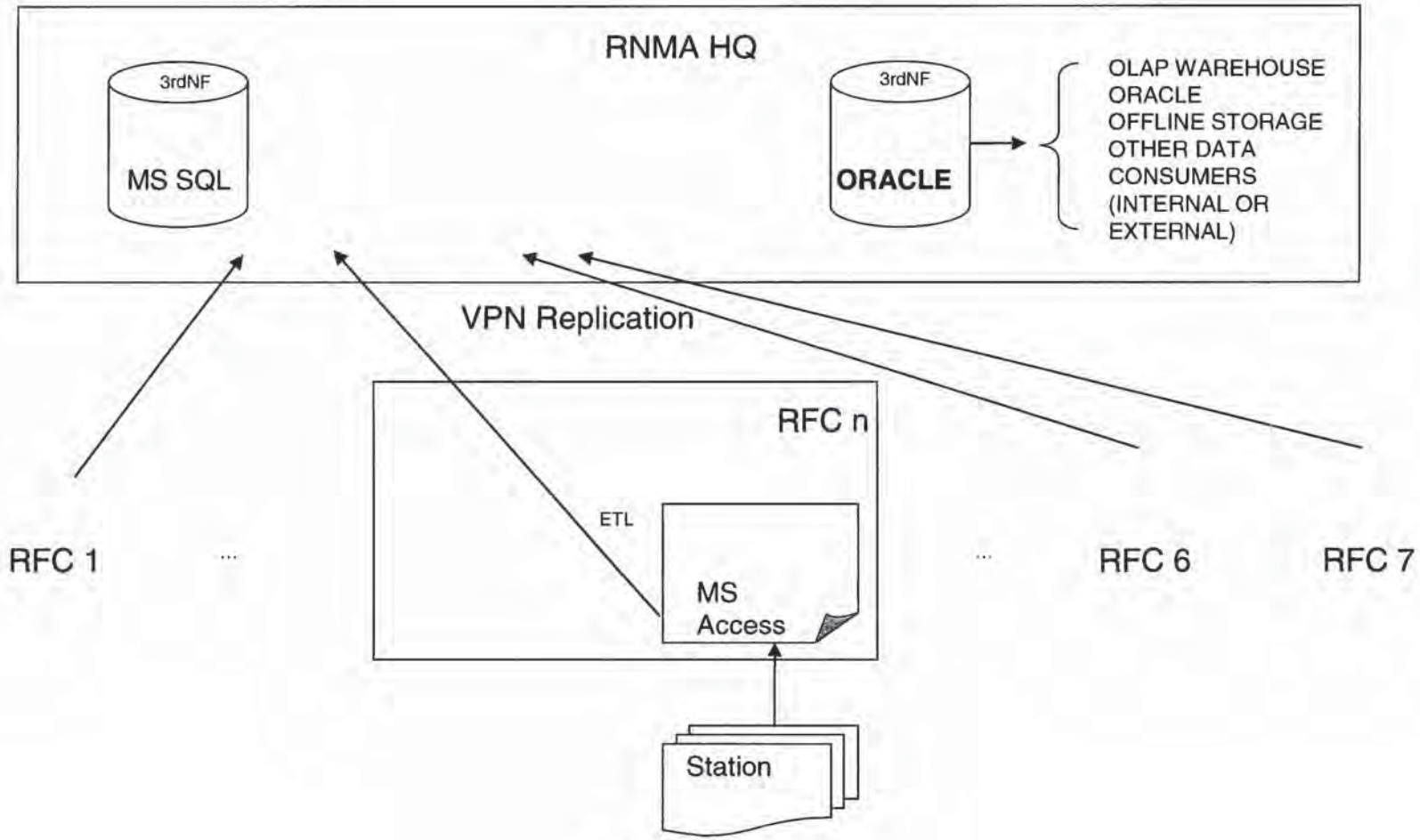

New system – requirements

- 3rd Normal Form (3rdNF)
- 2PC transactions and concurency
- GIS capable
- Auto-manageability, scalability, agility, Interoperability, integration, high availability
- N-tier
- SOA

Other requirements

- Developement Tools (RAD)
- inside database engine at least one runtime of a major language (C#/Java/VB/J#/etc.) running in-process (not out-of-process)
- OLTP vs OLAP
- Conversion tools (ETL)
- Updating policies (SPs, Quickfixes, security patches) and costs

Human resources

- Periodical training
  - 10-15% total working time (excluding holidays and vacations)
- Periodical internal meetings
  - Workshops, syncronisations, etc
- Industry recognized certifications
  - DBA certifications, examinations

Licensing and prices

- Editions and add-ons
- Per processors vs per core licensing
- Maintenance costs
- Total cost of ownership

Existing System

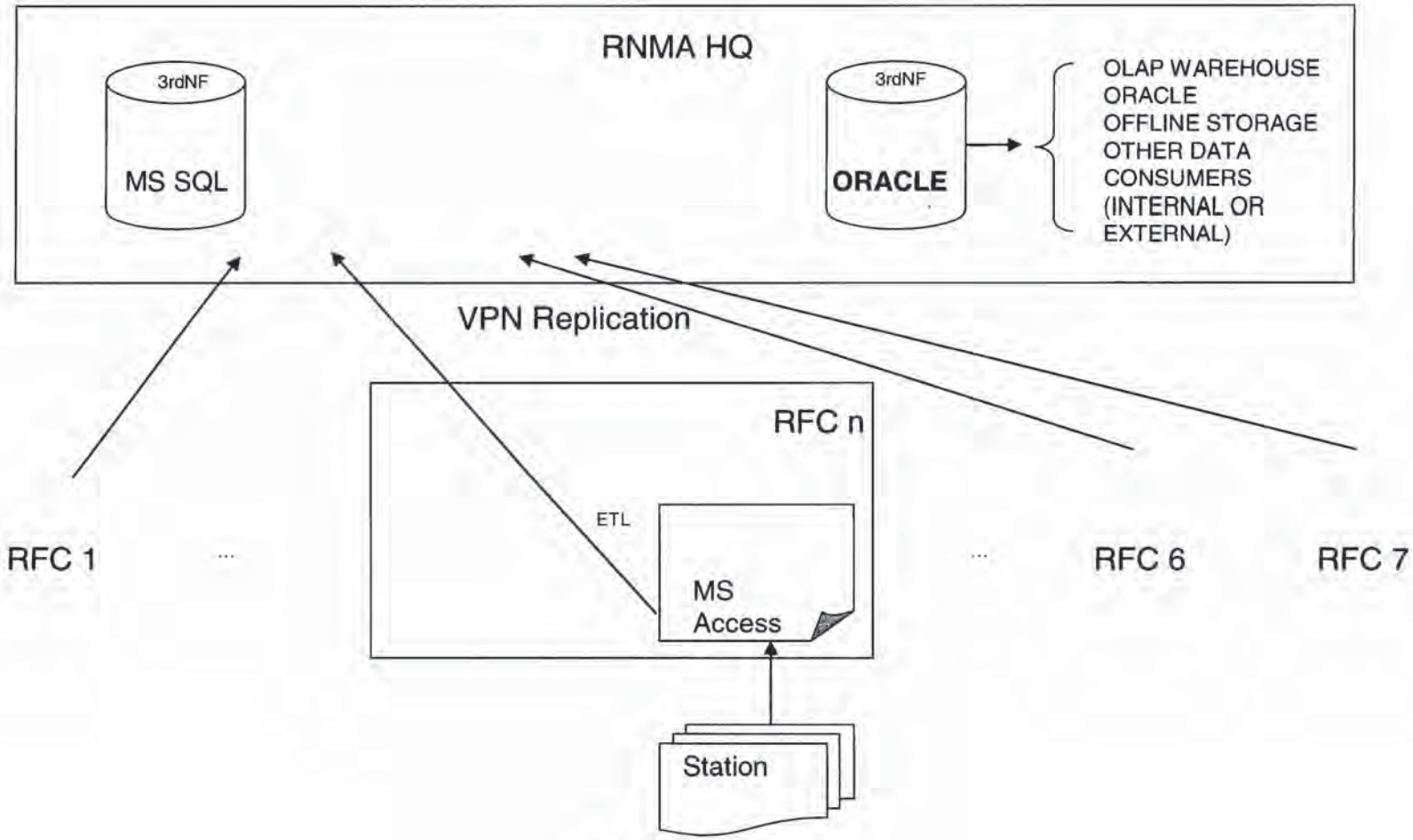

Transitioning System

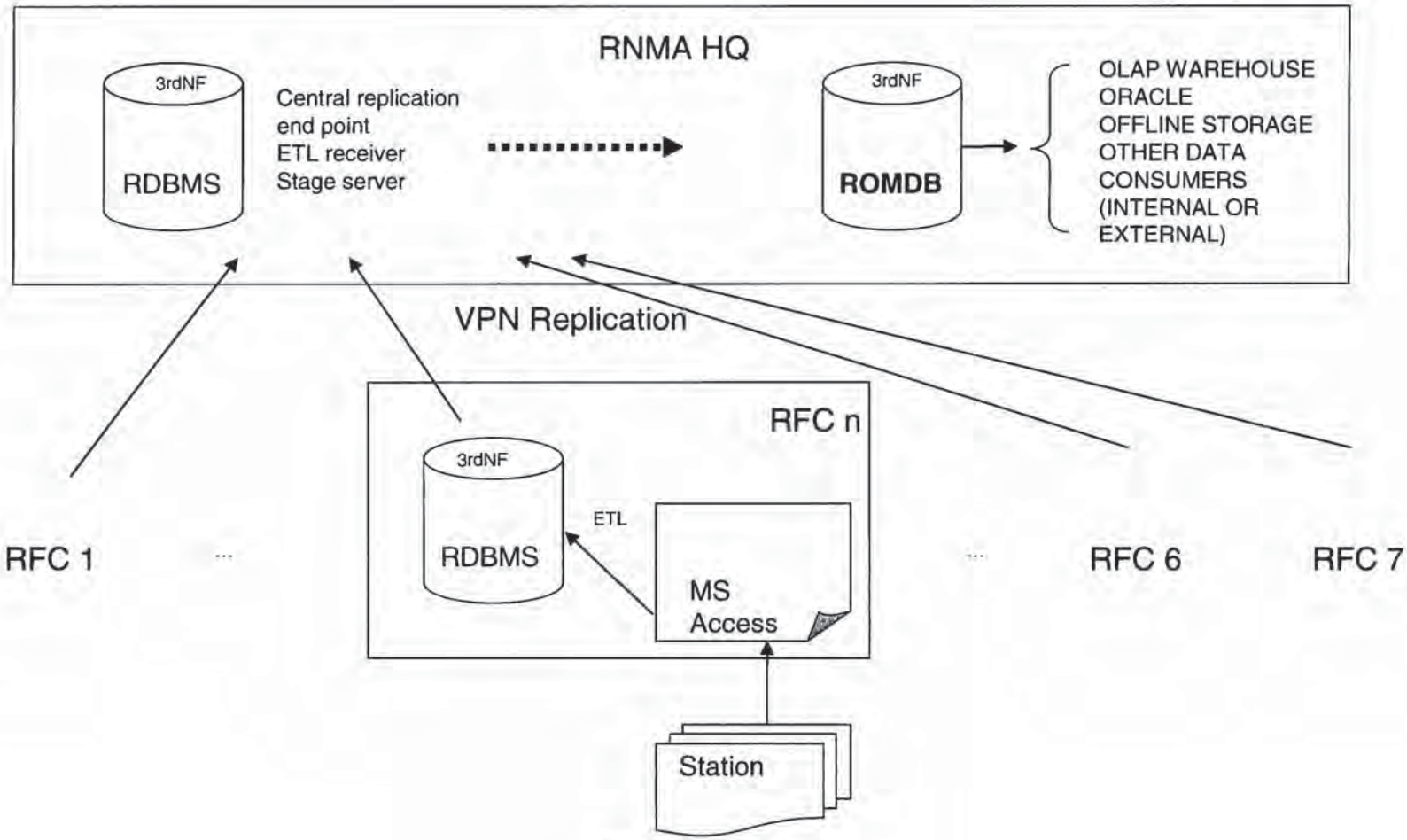

New System

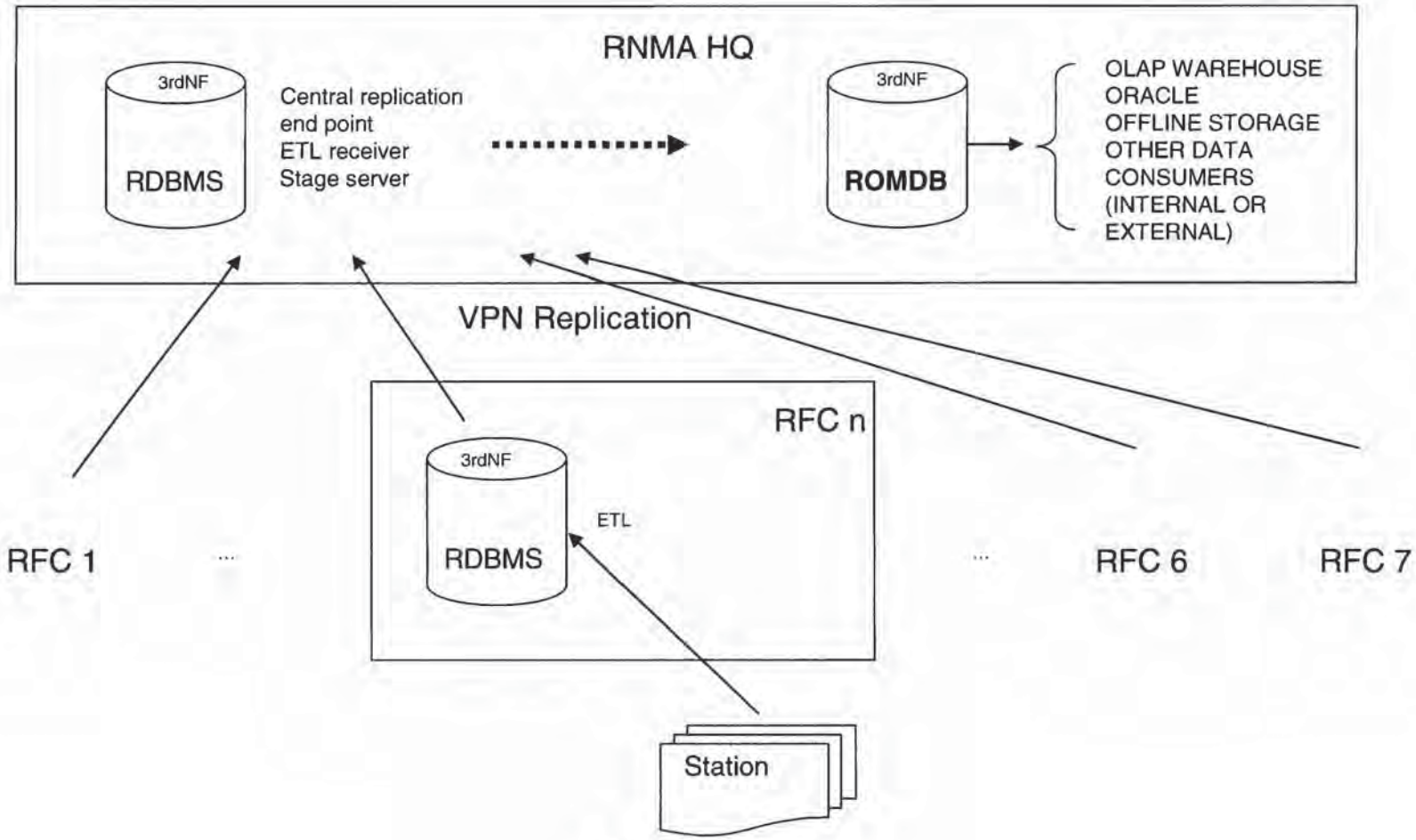
RNMA HQ
3rdNF
RDBMS
Central replication
end point
ETL receiver
Stage server
3rdNF
ROMDB
OLAP WAREHOUSE
ORACLE
OFFLINE STORAGE
OTHER DATA
CONSUMERS
(INTERNAL OR
EXTERNAL)
VPN Replication
RFC n
3rdNF
RDBMS
ETL
RFC 1
...
...
RFC 6
RFC 7
Station

Conclusions

- Upgrade of the regional Access data repositories to a robust 2PC flavor of RDBMS
- the implementation of a replication mechanism via existing VPN.
- Central location needs a failover configuration
- Insufficient human resources (additional training is required for existing staff)
- Criteria : price, easy of use and administer, easy to upgrade and availability of DBA's.
- Migration effort should be minimized choosing the right database solution

Conclusions

- Central and regional locations must be consolidated and should have a common schema in a unified database both in terms of database platform and database entity relationship management
- The replication of the data will transfer data around this distributed system in order to make available all the needed data at the corresponding level.
- "Romanian Operational Meteorological Database" (ROMDB) is an important step in RNMA's strategy regarding database services.

Q&A

TASK 7

ASSESS THE REQUIRED EQUIPMENT AND ASSOCIATED INVESTMENTS FOR THE INTEROPERATE PROJECT, AND DEVELOP A PHASED IMPLEMENTATION PLAN

SECTION VII (TASK 7) – ASSESS THE REQUIRED EQUIPMENT AND ASSOCIATED INVESTMENTS FOR THE INTEROPERATE PROJECT, AND DEVELOP A PHASED IMPLEMENTATION PLAN.

A – Assessment of the system's requirements for data and equipment including measurement, data transmission, collection, storage and processing; an inventory of the required equipment, software, procedures and training; and cost estimates.

General

The proposal for improvements in the meteorological system in Romania under the direction of RNMA includes the components evaluated and selected in the preceding sections of this report: the high performance computer, the data management system, and the sensors.

Implementation requirements have been identified and associated costs for the INTEROPERATE system have been estimated based on quotations by prospective vendors and industry sources. The relevant sections of the report provide detailed lists of system requirements, both hardware and software for the various components: computers, data storage, sensors, power supply and communication equipment. Details of the cost estimate are provided in at the end of this section. A summary description and tabulation of the recommended program ant its costs are provided below.

High Performance Computing Facility

The recommended High Performance Computing Facility is based on the IBM Power5+ model 575 computer, or equipment with equivalent capabilities and support. It allows expansion in a building block configuration, with high bandwidth and 100.5 gigabytes per second in benchmark operation. Two options are provided as a minimum (8 processors) or recommended (16 processors) depending on the available budget. It includes appropriately configured Compute Nodes and Service Nodes. Necessary software is included.

The recommended system includes the required storage infrastructure, primarily disk controllers using Fibre Channel disks and a tape library system. Disk storage of 4 TB is the minimum and 16-20 TB is recommended. Redundancy is provided in both the computing and storage systems that are proposed herein.

Operation and maintenance cost estimates are provided, based on typical expenditures as a percentage of system initial cost.

The estimated cost for the recommended configuration is $2,265,000 with an annual cost estimated at $453,000; and for the minimal configuration at $1,300,000 with an annual cost of $260,000, with the annual cost based on typical percentages of the initial cost.

Relational Database Management Systems

In selecting data management systems, integration and cost are important and possibly conflicting criteria. IBM DB2 would integrate better with the supercomputing system but carries a relatively high cost. Microsoft SQL Server 2005 is a robust solution that can be implemented at reasonable costs for RNMA. If the key factor is the price then MS SQL is the best option. However, if the key factor here is the level of integration and the supercomputing system is IBM-based then the best option is IBM DB2. Also, RNMA needs to invest more on training and education on the human resources side.

Following is the Microsoft-based specification for a data management system, with options for a Minimum and a Recommended level of investment, with estimated costs.

	Minimum	Recommended
RNMA HQ central replication endpoint	1 node RAID 5, 10000 rpm, 8 MB cache, HDD Node Configuration: 1 processor 3 GHz 2 GB RAM	2 nodes RAID 5, >10000 rpm, 16 Mb cache HDD Node Configuration: 2 processors 4 GHz 4 GB RAM
RNMA HQ hot backup server	1 processor 3 GHz RAID 5, 10000 rpm, 8 MB cache, HDD 2 GB RAM	2 processors 4 GHz RAID 5, >10000 rpm, 16 Mb cache HDD 4 GB RAM
RNMS RFC servers (7 servers)	1 processor 3 GHz 1 GB RAM	1 dual-core proc 3 GHz 2 GB RAM
Hardware Cost	$23,000	$27,000
Software Cost	$64,170	$64,170
Total Cost	**$22,750**	**$22,750**
Training Cost - Annual	$1,800	$1,800
Staffing Cost - Annual	$22,750	$22,750
Total Cost - Annual	**$24,550**	**$24,550**

Sensor Systems

The sensor systems required to support the INTEROPERATE program, and the specific products selected for testing in the pilot application are as follows:

1 – Present Weather Sensor- Vaisala PWD22 -20 units at a total cost of:	$315,542.
2 – Soil Moisture Probe - Campbell Scientific CS616 – 10 units at a total cost of	$48,252.
3 – Automatic/portable Weather Station – Campbell Scientific custom – 50 units (7 mobile) at a total cost of:	$469,799.
4 – Tethersonde - Vaisala DigiCORA - three units at a total cost of	$248,913
5 – Air Pollution Monitor - Air Instruments and Measurements AIM 8500 – one unit at a cost of:	$43,073.
Total cost for all selected sensing and monitoring equipment:	$1,129,489
Total cost with 20% contingency and design:	$1,355,387.

Total System Cost Estimate

Total estimated initial costs of the system desired by RNMA range from $2,743,000 for the minimal system, to $3,712,000 for the recommended system. Added estimated annual operating costs range from $420,000 for the minimum to $613,000 for the recommended program. These represent overall annual costs in the range of $1.0 million to $1.4 million, assuming a 6-year average life for the investment and a 6% interest rate on capital recovery.

			Minimum Facility		Recommended Facility	
			Total Cost	***Annual Cost***	***Total Cost***	***Annual Cost***
TOTAL, All Costs	Sensors, Computer, RDBM		$2,743,445	$420,089	$3,711,557	$613,089
Amortized Cost	6-yr life at 6% interest:		$556,919		$753,446	
TOTAL Annual Cost				$977,008		$1,366,535

B – Analyze available suppliers of the configurations recommended above.

The equipment proposed is available from a variety of US and non-US suppliers. The equipment selected for the sensor pilot demonstration applications was considered the best available at an appropriate price. To-date, the equipment used in the pilot has been satisfactory and may properly be used in the system as it is developed. The sensors selected for the pilot are as noted above.

For the High Performance Computing Facility, IBM equipment is considered the best suited, based on its wide application in meteorological services around the world, and resulting capabilities of support organizations within the manufacturer's system. However, othjer suppliers may meet the technical performance requirements as follows:

1. IBM Power 5+ 575
2. Cray X-1
3. Fujitsu VPP 5000
4. SGI Altix
5. Sun E25k

For the RDBM, there is an advantage in using equipment of the same manufacturer as the primary high performance computer system, especially if the primary equipment is IBM. Potential suppliers are:

1. IBM
2. Cray
3. SGI (Silicon Graphics Incorporated)
4. HP (Hewlett Packard)

C – The estimated cost-effectiveness of the proposed system

The damage, risk, loss of life and inefficient use of water resources that are now experienced by the citizens and businesses of Romania are significant reasons for social

concern and causes of economic losses in all regions of the country. Section V of this report provides details as to the ongoing damages resulting from weather events in Romania. Improved prediction, especially the more rapid and detailed information that will result from the investments proposed in the INTEROPERATE system, can mitigate or eliminate some of this adverse social and economic loss. In summary, the more severe effects in a recent year (2005), are reported as follows:

Flooding damage in Romania for the calendar year 2005

Locations affected:	1734
Number of weather-related deaths	76
Estimated cost of damage	EU 1.7 Bil ($1.2Bil)
Households damaged	93,976
Businesses damaged	1063
Agricultural area damaged	656,392 Ha
Roadways of all types damaged or destroyed	15,500 km
Bridges and culverts damaged or destroyed	913
Railway damaged or destroyed	24km
Flood control structures damaged or destroyed	630

The geographic effect included all counties in Romania, as well as the many economic and social sectors depending on the facilities noted above as being damaged or destroyed by flooding and other weather-related occurrences.

With overall annual costs as noted above in the range of $1.0 million to $1.4 million, a significantly greater economic benefit should be expected if the investment in the improved meteorological system is to be considered viable. The investment will certainly result in better predictions of weather, pollution and agricultural conditions. This improved information can contribute to a higher standard of living and greater national gross domestic product for Romania in many ways, including predictability of high risk weather events, reduced commercial losses, avoiding injury and loss of life, and planning for outdoor operations such as construction, air transport, recreation and agriculture. Most of these are difficult or impossible to quantify, but agricultural production may be the easiest to measure. With a an agricultural sector in Romania of over 10% of the economy, or about $12 billion per year, higher yields from better water management can easily exceed the entire cost of the proposed meteorological investment. For instance, even an improvement of 0.1% in agricultural production attributable to better forecasting would equal $12 million per year, or a benefit-cost ratio of about 10 to 1, certainly justifying the investment. The more likely scenario is that better analysis of ground moisture conditions and better weather forecasting that will follow from this investment could increase agricultural production by several percentage points, with a resulting benefit-cost-ratio that could be 100 to 1 or greater. This ignores the benefits in the more general categories of risk reduction noted earlier that come with better weather forecasting, but just the potential for improved agricultural output more than justifies the investment based on agriculture potential alone.

D – Implementation Schedule

The implementation schedule can be relatively short as no major construction or environmental disruption is involved in implementing the plan. The RNMA has completed renovation and adaptation of an existing building in the RNMA compound in Bucharest to accommodate the new computers. This includes a 60 square meter room with a false floor and ceiling for wiring, and a standby electric generator.

Based on the above, bidding and/or negotiation for equipment acquisition can be undertaken in 2008 and the entire program can be implemented in 2009.

Implementation Schedule for INTEROPERATE Project

Completion of computer housing facility	June	2008
Review and acceptance of study results	May – June	2008
Issue/response for computer tender notice	June – August	2008
Issue/response for sensor tender notice	Sept – Nov	2008
Issue/response for RDBM tender notice	Sept – Nov	2008
Award of computer purchase contract	Jan	2009
Award of sensor purchase contract	Jan	2009
Award of RDBM purchase contract	Jan	2009
Installation of computer and ancillary equipment	June-Oct	2009
Installation of sensors	March – Oct	2009
Installation of RDBM	June – Oct	2009
Final startup, testing and acceptance of system	Nov – Dec	2009

Romania InterOperate
Meteorological Sensors Cost Data

Sensor	Manufacturer	Model	Price	Notes
Present Weather	Optical Scientific	WIVIS/OWI	$ 7,500.00	Optical sensor
	All Weather Inc.	6490	$ 44,515.00	Includes Base Station, Communications Equipment, and shipping
	Coastal Environmental	Laser Drisdometer	$ 4,960.00	Thies model - Already in use at NMA
Soil Moisture Probe	Campbell Scientific	Sentek EnviroSMART (FDR)	$ 2,182.00	Includes access tubes, 81 meters of cable
	Campbell Scientific	Sentek EnviroSMART (FDR)	$ 3,766.00	Includes access tubes, portable datalogger CR215
	MESA technologies	TRIME Tube Access TDR meter	$ 9,433.00	Includes Data Pilot, access tubes and auger set
	MESA technologies	TRIME TDR-EZ TDR Probe	$ 1,450.00	Access tubes, auger set not included. Only 5 meters of cable
	Coastal Environmental	Water Content Reflectometer	$ 1,657.00	Does not include cable $6.50/meter. Need three 30cm probes (quoted) for required depth
Mobile Automatic Weather Station	Campbell Scientific	Custom	$ 4,925.00	Includes CR1000 datalogger
	Coastal Environmental	Zeno Weather Station	$ 7,095.00	Includes datalogger and software
	Vaisala	WXT510	$ 2,320.00	No datalogger, does not measure solar radiation or soil temp
	All Weather Inc.	TAMS	$ 18,771.00	Includes Radio Communication and shipping
Tethersonde	Vaisala	DigiCORA tethersonde sys.	$ 85,000.00	Does not include sondes
Radiosonde	Coastal Environmental	GPSonde	$ 41,664.00	Might not record NO2, SO2; sondes are one time use, does not include balloons
Air Pollution Monitoring	Air Instruments and Measurements	AIM 8500	$ 41,990.00	

Interoperate Project						
RNMA Romania - USTDA						
Sensor Cost Estimates						
DFP 2-05-08						
		Inflation factor 2005 - 2008 =	*1.12*			
Type	***Sensor Source***	***Description***	***2005 Price Each***	***2008 Price each***	***Number Required***	***Total Cost***
Present Weather	Vaisala PWD22	Visibility, measurement 10-2000 m; Identifies 7 types of precipitation intensity and amount	$ 14,677.10	$ 16,438.35	20	$ 293,542.00
		Shipping	$ 1,100.00	$ 1,232.00	20	$ 22,000.00
		Total Equipment	**$ 15,777.10**			**$ 315,542.00**
		Installation (no added cost if installed at Automatic WS site)*		$ -		$ -
		Total Equipment and Installation	**$ 15,777.10**	**$ -**		**$ 315,542.00**
Soil Moisture Probe	Campbell Scientific CS616	Time Domain Reflectometer probe, consists of 2- 30 cm long stainless steel probes and wireless CR1000 datalogger	$ 3,325.20	$ 3,724.22	10	$ 33,252.00
		Shipping	$ 1,500.00	$ 1,680.00	10	$ 15,000.00
		Total Equipment	**$ 4,825.20**			**$ 48,252.00**
		Installation	$ 391.00	$ 437.92	10	$ 3,910.00
		Total Equipment and Installation	**$ 1,891.00**			**$ 52,162.00**
Portable / Automatic Weather Station	Campbell Scientific Custom	Portable station with wind speed and direction, net radiation, air temp, relative humidity, soil temp probes plus GPS, 3 meter tripod, CR1000 datalogger, software and GSM Communications with 10 meter mast.	$ 6,670.00	$ 7,470.40	50	$ 333,500.00
		Shipping	$ 582.00	$ 651.84	50	$ 29,100.00
		Total Equipment	**$ 7,252.00**			**$ 362,600.00**
		Installation	$ 2,493.00	$ 2,792.00	43	$ 107,199.00
		Total Equipment and Installation	**$ 9,745.00**			**$ 469,799.00**
Tethersonde	Vaisala DigiCORA Tethersonde	Base System with six sondes	$ 78,538.00	$ 87,962.56	3	$ 235,614.00
		System Training	$ 3,840.00	$ 4,300.80	1	$ 3,840.00
		Shipping	$ 1,500.00	$ 1,680.00	3	$ 4,500.00
		Total Equipment	**$ 83,878.00**			**$ 243,954.00**
		Installation	$ 1,653.00	$ 1,851.00	3	$ 4,959.00
		Total Equipment and Installation	**$ 85,531.00**			**$ 248,913.00**
Air Pollution Monitoring	Air Instruments and Measurements AIM 8500	Open path gas analyzer. Measures SO2, NO, NO2 includes 900mhz communications option	$ 38,970.00	$ 43,646.40	1	$ 38,970.00
		Shipping	$ 2,450.00	$ 2,744.00	1	$ 2,450.00
		Total Equipment	**$ 41,420.00**			**$ 41,420.00**
		Installation	1653	$ 1,851.00	1	$ 1,653.00
		Total Equipment and Installation	**$ 43,073.00**			**$ 43,073.00**
All Required Sensors		**Total Cost all Required Sensors**				**$ 934,878.00**
		Total Cost all Shipping				**$ 73,050.00**
		Total Cost all Training				**$ 3,840.00**
		Total Cost all Installation				**$ 117,721.00**
		Total Cost all Required Sensors Complete in Place w/Training				**$ 1,129,489.00**
		Contingency at 10% of total				**$ 112,948.90**
		Design at 10% of total				**$ 112,948.90**
	Total Cost all Required Sensors Complete in Place w/Training with 10% contingency					**$ 1,355,386.80**

NOTES

Manufacturing for ten meter high mast : 840 x 1.12 = 940.80 ($941)

Infrastructure (concrete fondation, mains power supply, guy wires, ligtning rods, communication cables) : 1262 x 1.12 = 1413.44 ($1413)

Equipemnt mounting on site: 391 x 1.12 = 437.92 ($438)

We assumed that all PWD22 (20 pcs.) will be mounted on the same sites as the automatic weather stations; 7 pcs from 50 will be kept for portable use (one for each Regional Meteo Center)

If the PWD22 is installed at a separate location the added cost per site would be - manufacturing mast, $250, infrastructure, $700 and installation, $438 total of $1,388 per separate site.

Interoperate Project
RNMA Romania - USTDA
Summary Cost Estimates - Recommended Option
DFP 3-08

Equipment, Software or Service	*Source*		*Quantity Required*	*Total Cost*	*Annual Cost*
SENSORS					
Present Weather	Vaisala PWD22		20	$315,542	
Soil Moisture Probe	Campbell Scientific CS616		10	$52,162	
Portable / Automatic Weather Station	Campbell Scientific Custom		50	$469,799	
Tethersonde	Vaisala DigiCORA		3	$248,913	
Air Pollution Monitoring	Air Instruments and Measurements AIM 8500		1	$43,073	
Total for All Required Sensors				$1,129,489	
Total for All Required Sensors	With Contingency & Design =	20%		$1,355,387	$135,539
HIGH PERFORMANCE COMPUTER					
Computing	16 nodes w/32 GB memory ea		16	$1,296,000	
Service	Four w/32 GB memory ea		4	$404,000	
Operational Storage	Two servers w/14-300GB disks		2	$124,000	
Archival Storage	One server w/3x14 250 GB disks		1	$66,000	
Tape Storage	one tape robot w/four 3-tape drives		1	$144,000	
SAN	Two fiber channel switches		2	$33,000	
Network	one		1	$46,000	
Software	Compiler suite and licenses		4	$152,000	
Total Estimated Hardware Cost	Recommended Configuration			$2,265,000	$453,000
RELATIONAL DATABASE MANAGEMENT					
Hardware Cost				$27,000	
Software Cost				$64,170	
Total Estimated RDBM Cost				$91,170	24,550
TOTAL, All Costs				$3,711,557	$613,089
Amortized Cost	6-year life at 6% interest	factor = 0.203		$753,446	
TOTAL Annual Cost					$1,366,535

Note: Sensor annual costs as a percentage of investment = 10%

Interoperate Project
RNMA Romania - USTDA
Summary Cost Estimates - Minimum Option
DFP 3-08

Equipment, Software or Service	*Source*		*Quantity Required*	*Total Cost*	*Annual Cost*
SENSORS					
Present Weather	Vaisala PWD22		20	$315,542	
Soil Moisture Probe	Campbell Scientific CS616		10	$52,162	
Portable / Automatic Weather Station	Campbell Scientific Custom		50	$469,799	
Tethersonde	Vaisala DigiCORA		3	$248,913	
Air Pollution Monitoring	Air Instruments and Measurements AIM 8500		1	$43,073	
Total for All Required Sensors				$1,129,489	
Total for All Required Sensors	With Contingency & Design =	20%		$1,355,387	$135,539
HIGH PERFORMANCE COMPUTER					
Computing	8 nodes w/32 GB memory ea		8	$680,888	
Service	Two w/32 GB memory ea		2	$202,000	
Operational Storage	One server w/14-300GB disks		1	$58,000	
Archival Storage	One server w/3x14 250 GB disks		1	$66,000	
Tape Storage	one tape robot w/four 3-tape drives		1	$139,000	
SAN	Two fiber channel switches		2	$33,000	
Network	one		1	$46,000	
Software	Compiler suite and licenses		2	$76,000	
Total Estimated Hardware Cost	Minimal Configuration			$1,300,888	$260,000
RELATIONAL DATABASE MANAGEMENT					
Hardware Cost				$23,000	
Software Cost				$64,170	
Total Estimated RDBM Cost				$87,170	24,550
TOTAL, All Costs				$2,743,445	$420,089
Amortized Cost	6-year life at 6% interest	factor =	0.203	$556,919	
TOTAL Annual Cost					$977,008

Note: Sensor annual costs as a percentage of investment = 10%

Interoperate Romania Project
Potential Suppliers of Sensor and Computing Equipment
Includes US or partial US Sources

PRESENT WEATHER SENSORS

1 – Coastal Environmental Systems

Coastal Environmental Systems, Inc.
820 First Avenue South ♦ Seattle, Washington 98134
www.CoastalEnvironmental.com
800-488-8291 x170
kpaletta@CoastalEnvironmental.com

2 – Optical Scientific, Inc.

205 Perry Parkway	OSi Optical Scientific Inc.	301-963-3630 phone
Suite 14		301-948-4674 fax
Gaithersburg, MD 20874		sales@opticalscientific.com

3 – All Weather, Inc.

allweatherinc

Advanced Weather Reporting For An Unpredictable World

1165 National Drive
Sacramento, CA 95834

Tel (916) 928-1000
Fax (916) 928-1165
EMAIL sglander@allweatherinc.com
http://www.allweatherinc.com

Portable Soil Moisture Sensors

1 – MESA Systems Co.

MESA Systems Co. 6 West Mill St., Unit 3, MA 02502-1507
508/359-5322, fax: 508/359-5339, sales@mesasystemsco.com

---

2 – Campbell Scientific

CAMPBELL SCIENTIFIC, INC.

815 W 1800 N · Logan, UT 84321-1784 · USA · (435) 753-2342
FAX (435) 750-9540 · www.campbellsci.com

MOBILE AUTOMATIC WEATHER STATIONS

1 – Campbell Scientific

CAMPBELL SCIENTIFIC, INC.

815 W 1800 N · Logan, UT 84321-1784 · USA · (435) 753-2342
FAX (435) 750-9540 · www.campbellsci.com

2 – Coastal Environental

Coastal Environmental Systems, Inc.
820 First Avenue South ♦ Seattle, Washington 98134
www.CoastalEnvironmental.com
800-488-8291 x170
kpaletta@CoastalEnvironmental.com

3 – Vaisala, Inc

P.O. Box 26, FIN-00421 Helsinki, FINLAND
Tel: +358 9 894 91
Fax: +358 9 8949 2485
Email: weather.transmitter@vaisala.com
www.vaisala.com

Vaisala Inc.
Boulder, CO, USA
Tel. +1 303 499 1701
Fax +1 303 499 1767

TETHERSONDE SYSTEMS

1 – Vaisala, Inc.

P.O. Box 26, FIN-00421 Helsinki, FINLAND
Tel: +358 9 894 91
Fax: +358 9 8949 2485
Email: weather.transmitter@vaisala.com
www.vaisala.com

Vaisala Inc.
Boulder, CO, USA
Tel. +1 303 499 1701
Fax +1 303 499 1767

2 – Coastal Environmental Systems, Inc.

Coastal Environmental Systems, Inc.
820 First Avenue South ♦ Seattle, Washington 98134
www.CoastalEnvironmental.com
800-488-8291 x170
kpaletta@CoastalEnvironmental.com

BACKGROUND AIR POLLUTION MONITORING STATION

1 – Air Instruments and Measurement, Inc.

AIR INSTRUMENTS & MEASUREMENTS, LLC
[mailing] PMB 391, 3579 E. Foothill Blvd, Pasadena CA 91107, USA aimanalysis@earthlink.net
[physical] 2275 E. Foothill Blvd, Pasadena, CA, 91107, USA http://www.aimanalysis.com

HIGH PERFORMANCE COMPUTER AND RELATED EQUIPMENT

For the High Performance Computing Facility, IBM equipment is considered the best suited, based on its wide application in meteorological services around the world, and resulting capabilities of support organizations within the manufacturer's system. However, othjer suppliers may meet the technical performance requirements as follows:

1. IBM Power 5+ 575
2. Cray X-1
3. Fujitsu VPP 5000
4. SGI Altix
5. Sun E25k

For the RDBM, there is an advantage in using equipment of the same manufacturer as the primary high performance computer system, especially if the primary equipment is IBM. Potential suppliers are:

1. IBM
2. Cray
3. SGI (Silicon Graphics Incorporated)
4. HP (Hewlett Packard)

ATTACHMENT A

HIGH PERFORMANCE COMPUTING FACILITY

THE OHIO STATE UNIVERSITY SUPERCOMPUTER CENTER REPORT

Attachment A – High Performance Computing Facility

The Ohio State University Ohio Supercomputer Center

The systems recommended in the following report provide the technical performance required, with identification of specific equipment meeting RNMA's needs. Equipment from other manufacturers with the same characteristics and capabilities as this equipment may be equally acceptable to RNMA.

A High Performance Computing Facility
For the
Romanian National Meteorological Administration

Prepared for Burgess & Niple, Inc.

By

Troy Baer, Jim Giuliani, and Leslie Southern
(Ohio Supercomputer Center)

David Bromwich and Rick Toracinta
(Ohio State University Byrd Polar Research Center)

April 14, 2006

FINAL REPORT

TABLE OF CONTENTS

	Page
EXECUTIVE SUMMARY	1
Introduction	2
Assessment of Requirements and Current Capabilities	3
Computational Requirements	3
Data Storage Requirements	3
Operational Requirements	3
Current Capabilities	4
Proposed System	6
Vendor	7
High Performance Computing System	8
Storage Infrastructure	10
Network Infrastructure	12
Facilities Considerations	13
Implementation Plan	14
Support and Long-Term Maintenance	15
Conclusions	17

TABLE OF CONTENTS (continued)

LIST OF TABLES

Table No.	Description	
1	RNMA Storage Pools	5
2	Compute Node Configurations	10
3	Service Node Configurations	10
4	Storage Configurations	12
5	Estimated Facilities Requirements	14

LIST OF FIGURES

Figure No.	Description	
1	Recommended System Configuration	7

LIST OF APPENDICES

Appendix	Description
A	Detailed Configuration of Proposed System
B	Performance Characteristics
C	Estimates of Forecast Data Production Rates
D	Estimates of Reduced Data Production

EXECUTIVE SUMMARY

The Romanian National Meteorological Administration (RNMA) desires to purchase a high performance computer (HPC) system to support numerical weather prediction simulations as part of its part of the INTEROPERATE project. Based on RNMA's projected needs, a number of key design criteria have been identified:

- High Memory Bandwidth
- Redundancy and Fault Tolerance
- Vendor Compiler Support
- Operational Data Lifetime of 30 Days
- Compatibility with ECMWF
- Hierarchical Storage Management of Archival Data.

To meet these criteria, an integrated solution comprised of a cluster of IBM Power5+ model 575 systems with Fibre Channel based disk and tape storage is proposed. Two configurations are proposed: a minimal configuration just large enough to support RNMA's operational forecast computing with some redundancy, and a recommended configuration with additional capacity to support research and development work at RNMA.

Introduction

As part of the INTEROPERATE project, the Romanian National Meteorological Administration (RNMA) desires to purchase a high performance computer (HPC) system to support numerical weather prediction simulations as well as storage of weather observations. This system must support both operational meso-scale weather models as well as a variety of related research applications. The system must integrate with other aspects of the INTEROPERATE project, such as remote sensing devices and Doppler radar imaging. Moreover, given that the system will provide daily weather forecasting information for all of Romania, the system must be a production-grade, highly available solution integrating high performance computing resources with data storage. Both short-term storage of weather forecast data products and longer-term archival storage of reduced forecast data as well as remote sensing and radar data must be supported.

This report presents one possible system which could fulfill RNMA's needs. The report consists of two parts. The first part assesses the computing needs and current capabilities of RNMA with respect to meso-scale weather forecasting, and will present a number of design criteria which must be met by a system which would fulfill RNMA's needs. The second part of the report will present two system configurations and explain how those systems would meet the design criteria.

Assessment of Requirements and Current Capabilities

Computational Requirements

RNMA's primary application is meso-scale weather forecasting. There are several widely used applications in this space, including MM5 and its successor WRF in the United States, and ALADIN and AROME in Europe. While these codes vary in their numerical approaches, like many other classes of scientific computing applications their performance characteristics are dominated almost entirely by memory bandwidth. Systems with *high memory bandwidth* – that is, a very high rate of sustained data transfer between the processors and main memory -- have been demonstrated to have superior performance on meso-scale weather forecasting applications compared to systems with higher peak floating point performance but lower memory bandwidth. High memory bandwidth has therefore been identified as a key design criterion.

Data Storage Requirements

While meso-scale weather forecasting is RNMA's main computing application, the data products from the forecast computations are not the sole type of data that they need to store. Satellite and Doppler radar imaging data must also be stored, along with remote sensing data generated by other components of the INTEROPERATE project. Very broadly speaking, these data fall into two very broad categories, operational and archival. Operational data is primarily the full output of the meso-scale weather forecasts and is relatively ephemeral; currently RNMA only keeps forecast output for 17 days, although they would like to extend that to an *operational data lifetime of 30 days* if possible. A lifetime of at least 30 days for operational data has therefore been identified as a key design criterion. Archival data, on the other hand, is to be kept for as long as possible – preferably forever. Examples of archival data include satellite and Doppler radar imagery and reduced forecast output.

Operational Requirements

RNMA forecasts weather for the entire nation of Romania, which includes several mountainous regions prone to flash flooding. As a result, RNMA requires a very high degree of *redundancy and fault tolerance* from its production computing system. Single points of failure need to be minimized or eliminated wherever possible, in all aspects of the system. Moreover, the system should have sufficient capacity to keep running the production forecasts in the face of hardware failures in a significant fraction of the system, at the expense of RNMA's research applications if need be. As a result, redundancy and fault tolerance have been identified as key design criteria.

Current Capabilities

RNMA currently has two local computing systems used for meso-scale weather forecasting, a Sun E4500 system with eight processors and a 28-processor cluster of commodity systems running Linux. Most of RNMA's production forecasting runs are done using the Sun E4500. Compiler problems on the Linux cluster system are cited as the main reasons of that system's lack of adoption; *vendor compiler support* is considered critical and therefore a key design criterion.

Planning for future collaborations with other European countries is another important consideration. Many other European nations have discussed the computational aspects of weather modeling projects, but relatively few discuss a complete data lifetime solution from acquisition through transfer and storage to numerical modeling, data reduction, and archiving. Upon Romania's entry to the European Union, RNMA would also have access to the HPC facility at the European Center for Medium range Weather Forecasting (ECMWF), which is a cluster of IBM Power4 p690 systems. *Compatibility with ECMWF* is therefore seen as an important part of any future system acquisition and a key design criterion.

With regard to data storage, RNMA currently has several separate pools of online storage allocated to particular projects, with a total capacity of approximately 1.2 terabytes. Offline storage is currently done to a variety of media, including optical (recordable CDROMs and DVDs) and magnetic (4mm DAT). Because the offline storage is handled separately for each type of data, there is to the authors' knowledge no master index of all the data and no automated

way of recalling offline data back to online storage. This situation could be remedied with *hierarchical storage management of archival data*, using a centralized data archive such as a magnetic tape library. As a result, hierarchical storage management for archival data is seen as a key design criterion.

Table 1: RNMA Storage Pools

Project	**Current Capacity (GB)**	**Space Currently Used (GB)**	**Current Growth Rate (GB/month)**	**Projected Growth Rate (GB/month)**
Climatological Database	50	15	0.5	2
Forecast Data	~50(?)	~50(?)	31	100
Radar Data	604(?)	604(?)	25.4	25.4
Satellite Data	500	500(?)	100-150	100-150

Proposed System

As described in the previous section, RNMA's computing and operational requirements result in the following design criteria:

- High Memory Bandwidth
- Redundancy and Fault Tolerance
- Vendor Compiler Support
- Operational Data Lifetime of 30 Days
- Compatibility with ECMWF
- Hierarchical Storage Management of Archival Data.

In the authors' view, the system which would best meet these criteria is an integrated solution comprised of a cluster of IBM Power5+ model 575 computers running AIX 5.3 with Fibre Channel based disk and tape storage managed by IBM's GPFS, Tivoli Storage Manager, and DB2 software. The following sections will describe the proposed system in greater detail and present two possible configurations: a minimal configuration just large enough to support RNMA's operational forecast computing with some redundancy, and a second, recommended configuration with additional capacity to support research and development work at RNMA. Complete hardware and software specifications for the system, including cost estimates, can be found in Appendix A; however, it should be kept in mind that the costs shown there are merely estimates for the system itself and do not include shipping, installation, integration, or facility power and cooling costs.

Figure 1: Recommended System Configuration

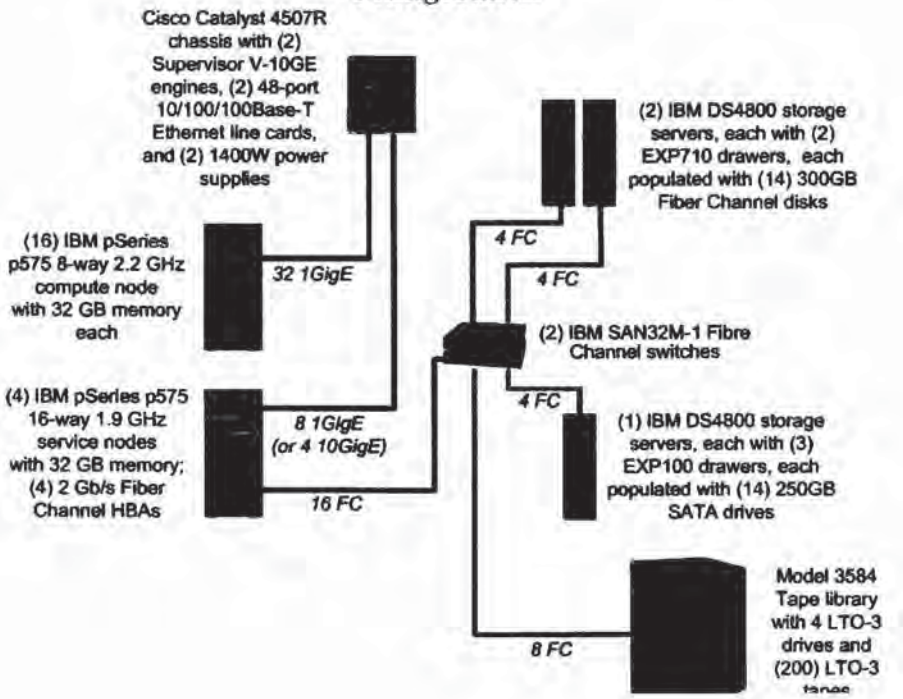

Vendor

From a support perspective, a system of the size and potential complexity needed to support all of RNMA's desired workload is most easily acquired from and supported by a single vendor, rather than acquiring components *a la carte* and integrating them with in-house staff. There are at least five major United States computer manufacturers who can field HPC systems with the desired attributes, as well as disk and tape storage: Cray, HP, IBM, SGI, and Sun. Of these, IBM fields the hardware with the highest demonstrated memory bandwidth per processor. IBM is also the only one of these vendors who can field credible enterprise quality database and tape backup solutions of their own. IBM also has offices worldwide (including in Romania) and is in excellent financial health, a factor which needs to be considered given the importance of this system to Romania's weather forecasting ability. Moreover, IBM already supports a number of large sites doing work similar to that desired by RNMA, including ECMWF in the United Kingdom as well as NCAR and NOAA in the United States.

High Performance Computing System

The core of the proposed system is a number of IBM Power5+ model 575 computers. The Power5+ model 575 is an eight- or sixteen-processor system based on IBM's multi-core Power5+ technology, with an unusual rackmount chassis design which allows up to twelve systems to fit into a specially designed 61-cm (24-inch) rack. The 575 is a natural choice as the "building block" for the type of system desired by RNMA, as it fulfills several of the design criteria outlined above. It has extremely high memory bandwidth, with sustained performance of 100.5 gigabytes per second on the STREAM triad benchmark. With either eight or sixteen processors per system sharing anywhere from 1 to 256 gigabytes of memory, it supports shared memory programming models very well; however, distributed memory programming models such as MPI are also supported with the addition of a high speed network such as Infiniband or IBM's High Performance Switch network. The XL Compiler suite for the Power5 architecture is widely used on weather codes around the world and is actively supported by IBM. The Power5 architecture is also consistent and compatible with the facilities at ECMWF and other meteorological computing facilities around the world. Finally, the 575 is among the highest performing systems in the world on a per-node basis for a number of meteorological codes; for instance, an 8-processor 575 performs at 19.23 GFLOP/s on the MM5 T3A Standard benchmark, which is roughly comparable of the performance of 10 processors on a Fujitsu VPP5000 vector supercomputer for the same application and data set. Appendix B compares the performance of the 575 on the MM5 T3A benchmark to that of a Cray X1, a Fujitsu VPP5000, and an SGI Altix 3700.

It should be noted that while this proposed system is a "cluster" in the sense that it is a collection of computers with identical (or at least very similar) hardware characteristics, it is a much different sort of system than a cluster of commodity computers such as the one currently in use at RNMA. The individual computers are much more powerful and have better RAS (reliability, availability, and serviceability) features than commodity systems. It also comes as an integrated system with computing, storage, and software all from the same vendor, as opposed to the *a la carte* approach used on most commodity clusters. One could argue that having a few systems with many processors, such as the IBM Power5+ model 595, might be more effective than a larger number of more modestly sized systems; however, there are a number of reasons

why the authors believe this is not the case. First, having a smaller "quantum" makes it less expensive to scale the system horizontally by adding more computers. Second, from an overall system availability point of view, a hardware failure in a larger node will disable a proportionately larger fraction of the overall system's capabilities than the failure of a smaller node will, assuming that the mean time between failure is roughly the same between the two. Third, in the specific case of the 595, the larger node actually has substantially less total memory bandwidth (174.5 GB/s on a 64-processor 595) than an equivalent number of processors of the smaller nodes (8 x 100.5 GB/s on an 8-processor 575 = 804.0 GB/s).

The proposed system would have two slightly different types of computers with very different missions: *service nodes* and *compute nodes*. A service node is a computer which is responsible for running one or more system services, such as login access, the LoadLeveler batch system, or the GPFS file system; as such, it may be accessible from outside the cluster. In contrast, a compute node is a computer whose sole task is running computations – in this case, meteorological simulations – and therefore may not be accessible from outside the cluster. Both types of nodes would use the Power5+ model 575 hardware, but in different configurations. The authors recommend that the compute nodes be the 8-processor version of the 575 and the service nodes be the 16-processor version. This may seem contradictory at first glance – why not vice versa; but there is a reason for it. Recall that the limiting factor on performance of meso-scale weather models is generally memory bandwidth. The 16-processor version of the 575 has almost exactly the same measured memory bandwidth as the 8-processor version, so it is not clear that the 16-processor version would have any substantial performance advantage for the class of problems of interest to this system. In addition, the individual processors in the 16-processor version of the 575 are slightly slower than those available in the 8-processor version. For service nodes however, I/O and network bandwidth are more important than memory bandwidth per processor; here the 16-processor version is preferable, as it allows the node to be partitioned into many virtual servers using the logical partition (LPARS) functionality available in AIX.

At peak demand, RNMA's projected production workload has three concurrent jobs running at the same time. To allow for the potential of hardware failures, the authors recommend an absolute minimum of eight compute nodes and 2 service nodes. A more robust configuration

would be 16 compute nodes and 4 service nodes. If all hardware is operational, any capacity in excess of that required for operational forecasts is available for research computing.

Table 2

Compute Node Configurations

	Minimal	**Recommended**
Number of Compute Nodes	8	16
Processors per Compute Node	8	8
Compute Node Processor Speed	2.2 GHz	2.2 GHz
Memory per Compute Node	32 GB	32 GB
Compute Node Network Interfaces	2x Gigabit Ethernet	2x Gigabit Ethernet

Table 3

Service Node Configurations

	Minimal	***Recommended***
Number of Service Nodes	2	4
Processors per Service Node	16	16
Service Node Processor Speed	1.9 GHz	1.9 GHz
Memory per Service Node	32 GB	32 GB
Service Node Network Interfaces	2x Gigabit Ethernet, 4x 2Gbit/s Fibre Channel	2x Gigabit Ethernet, 4x 2Gbit/s Fibre Channel

Storage Infrastructure

Two to three IBM DS4800 disk controllers and an IBM 3584 LTO-3 tape library would be used to store the data produced by the forecasts run on the above computing system, as well as

that acquired from external sources such as satellite and radar imagery. Operational data would be stored one or two DS4800s, using Fibre Channel disks for the high read and write performance. Access to the disk volumes from the compute nodes would be managed using IBM's General Purpose File System (GPFS), which is used at ECMWF and a number of other HPC facilities around the world. Based on estimates provided by RNMA, the actual volume of forecast data produced per month would be on the order of 1.1 TB; however, the authors recommend provisioning at least 4 TB and preferably 16-20 TB of disk for operational data to allow for model growth, longer data retention, and novel or unforeseen applications.

Backups and access to the tape library would be handled through the Tivoli Storage Manager (TSM) software, which would be run on two of the service nodes. The Space Management option to TSM would be used in conjunction with GPFS to manage the archival data, allowing transparent migration of archive files between the LTO3 tape robot and a 10 TB disk cache on a DS4800 equipped with SATA disks for maximum capacity/cost. Because of the volume of data involved (currently 1.2 TB plus a worst case growth rate of 0.28 TB/month), the TSM space management option appears to be a better match for RNMA's environment than HPSS, as the latter has very substantial capital cost and administrative overhead associated with it which only pay off for data volumes in the multi-petabyte range.

Storage of query-able data in relational database form would be accomplished using the DB Universal Database engine, which would also be running in LPARs on the service nodes. DB2 is an enterprise grade, highly scalable clustered database solution that can use GPFS as its storage backend, and it can integrate with TSM to manage backups of the databases. Furthermore, IBM xSeries servers with DB2 instances could be deployed at RNMA's regional facilities for handling local database needs.

As with the HPC portion of the system, the storage in the proposed system must be redundant and highly fault tolerant. To that end, the authors recommend interposing a storage area network (SAN) comprised of two IBM SAN32M-1Fibre Channel (FC) switches between the service nodes and any storage devices. The service nodes and storage devices would have half of their FC links connected to each switch, so that all the hosts and devices have connectivity to each other (albeit in a degraded fashion) in the event of a FC link or switch failure. The two FC

switches should have at least one inter-switch link (ISL) connected between them. This leaves the tape robot's arm mechanisms as the only single point of failure in the storage infrastructure; if that is a significant operational consideration, then an upgrade to the High Availability (HA) version of the 3584 robot should be purchased.

Table 4
Storage Configurations

	Minimal	**Recommended**
DS4800 Disk Controllers for Operational Data	1	2
Disks per Controller	14	28
Disk Size and Technology	300GB FC	300GB FC
Operational Data Raw Capacity	4.2 TB	16.8 TB
DS4800 Disk Controllers for Archival Disk Cache	1	1
Disks per Controller	42	42
Disk Size and Technology	250GB SATA	250GB SATA
Archival Disk Cache Raw Capacity	10.5 TB	10.5 TB
Total Disk Raw Capacity	14.7 TB	27.3 TB
Tape Drives	4	4
Number of Tapes	75	200
Tape Size and Technology	400GB LTO3	400GB LTO3
Tape Raw Capacity	30 TB	80 TB
Total Number of FC Links	16	20

Network Infrastructure

The system described above requires network connectivity between the compute and service nodes. As each 575 comes with two onboard Gigabit Ethernet interfaces, Gigabit Ethernet is the logical choice. However, in keeping with the design criteria of redundancy and fault tolerance, any Gigabit Ethernet switch used in this sort of system should have redundant power supplies, switch fabric/supervisor modules, and line cards. One such switch is the Cisco Catalyst 4507R. The switch configuration recommended for this

system includes two supervisor modules and two Gigabit Ethernet line cards; for the sake of redundancy, the two Gigabit Ethernet interfaces on a 575 should be plugged into different line cards. The switch configurations shown in Appendix A also include supervisor modules with two 10 Gigabit Ethernet ports each for high bandwidth connectivity out of the system. If greater I/O bandwidth is desired, 10 Gigabit Ethernet interfaces could be installed in the service nodes and connected to these ports on the switch.

A high performance message passing network such as Infiniband or IBM's HPS was not included in the configurations presented in this report. However, one could easily be added at additional cost.

Facilities Considerations

The proposed system should be housed in a climate-controlled, raised-floor environment with sufficient power and cooling. The Power5+ model 575 requires a special 24-inch (60.96 cm) wide rack, which may contain up to twelve 575 systems. A fully populated rack can consume up to 41.5 (kilovolt-ampere (kVA) of electricity (using 3-phase power in 240 or 480-volt alternating current (VAC), exhaust up to 41.6 kilowatts (kW) of heat into its surroundings, and weigh up to 1,581 kilograms (kg). In addition, the storage and network infrastructure will require three racks of equipment and significant amounts of electrical power (using single-phase 240 VAC) as well. Table 5 shows estimates of the power, cooling, and floor space requirements for both proposed configurations; however, guidance from the manufacturer should also be followed in this regard.

Table 5

Estimated Facilities Requirements

	Minimal	**Recommended**
Number of 575 Racks	1	2
Maximum 575 Power Draw	34.7 kVA	69.3 kVA
Number of Disk Racks	1	1
Number of Disk "Rack Units"	20U	33U
Maximum Disk Power Draw	2.0 kVA	3.4 kVA
Number of Tape Racks	1	1
Maximum Tape Power Draw	1.6 kVA	1.6 kVA
Number of Network Racks	1	1
Number of Network "Rack Units"	15U	15U
Maximum Network Power Draw	3.3 kVA	3.3 kVA
Total Power Required	41.6 kVA	77.6 kVA
Total Cooling Required	11.9 tons	22.1 tons
Total Floor Space Required	10.5 m^2	15.0 m^2

Implementation Plan

Deploying a production-grade system of the size and complexity of that described above is a non-trivial task which should be undertaken in phases. First, once the final configuration is selected but before the system is shipped, the system's total power and cooling requirements must be used to make any necessary upgrades to the facility where the system will be housed. These upgrades should be in place before the system is delivered, so that the hardware is not forced to sit idle or unusable after delivery.

The system should be delivered and installed by either the manufacturer or an integrator approved by both RNMA and the manufacturer. Once the physical installation is completed, the service nodes, network switches, and storage devices should brought up and minimally configured. Logical units (LUNs) on the disk controllers should then be created and assigned to operational data GPFS, archival data GPFS, TSM disk cache for backups, or a particular service node. From that point, several tasks can be undertaken more or less concurrently:

- Creating and testing the GPFS volumes for operational data and archival data.
- Creating and testing databases in the DB2 database engine.
- Installing, configuring, and testing TSM, both for backups and for space management on the archival data GPFS volume.
- Installing, configuring, and testing user-space software such as the XL Compiler suite and LoadLeveler.
- Bringing up and configuring the compute nodes.

Once the user-space software is installed and some of the compute nodes are up and available for scheduling through LoadLeveler, users can be allowed onto the system so that they can begin porting and benchmarking their codes on the new platform. When all of the above tasks have been completed, the new system should begin running the full production workload concurrently with the old production system, so that the results of the new system can be verified against that of the old system. Finally, once all the applications on the old production system have been verified, a deadline can be set for migrating off of the old system.

Support and Long-Term Maintenance

Annual hardware and software maintenance from IBM for American customers is typically 20 percent of the initial purchase price per year, and this is reflected in the estimated

costs shown in Appendix A. In addition, the authors recommend having at least four full time on-site staff to administer the system. These would consist of:

- A lead administrator who would be in charge of the overall project, and responsible for the maintenance of the computer hardware and AIX system software.

- A storage administrator who would be responsible for managing the storage hardware, GPFS file systems, and TSM backups.

- A database administrator who would be responsible for maintaining the DB2 database engine.

- A support engineer who would be responsible for maintaining user-space software such as compilers, as well as assisting users in porting and tuning their codes to the system.

All four of these positions could be filled with either existing RNMA personnel, new hires, or contract personnel from IBM or an integrator.

Conclusions

Given the needs of RNMA, it is the authors' opinion that the chances of success of this project will be significantly higher if a single vendor can be selected that will provide an integrated system, from both a hardware and software standpoint. Narrowing the responsible parties down to one vendor will provide RNMA significant leverage when problems arise or changes to the system/software are desired. After considering all of the options, it is the authors' belief that there is a clear leader among the various solution providers. IBM is identified as the system vendor for the following reasons:

- The IBM Power5+ model 575 architecture provides comparable performance on applications requiring high memory bandwidth, such as weather modeling codes, to other architectures like vector and EPIC. (See Appendix B.)

- A Power5+ 575 based system provides the scalability and redundancy needed to support a production weather forecasting system. In the recommended configuration, the failure of a 575 compute node would only require the simulations running on that compute node to be restarted on another node.

- IBM, who currently has an office in Romania, can provide a single software/hardware solution as well as integration and support services.

- IBM has a dedicated weather forecasting group that could provide expertise in integration and support.

- IBM can provide database software, integration and support services.

In addition to the primary points identified, IBM offers an architecture that runs weather modeling applications very well and they can provide a completely integrated hardware/software solution. IBM has the additional benefit that their systems are in use by many of the United States and Europe's leading weather forecasting organizations. Specifically, ECMWF as well as Spain and Germany use solutions from IBM and Meteo-France is currently evaluating their future hardware direction. Having a comparable system would greatly enhance collaborative opportunities for RNMA, particularly with ECMWF.

Appendix A

Detailed Configurations of Proposed System

Minimal Configuration

Compute: US $680,000.00
Eight (8) IBM model 575 8-way Power5+ 2.2GHz systems with 32 GB memory each.

Service: US $202,000.00
Two (2) IBM model 575 16-way Power5+ 1.9GHz systems with 32 GB memory and four (4) 2Gbit/s Fibre Channel HBAs each.

Operational Storage: US $58,000.00
One (1) IBM DS4800 storage server with one (1) EXP710 drawer populated with fourteen (14) 300GB Fibre Channel disks.

Archival Storage: US $66,000.00
One (1) IBM DS4800 storage server with three (3) EXP100 drawers, each populated with fourteen (14) 250GB SATA disks.

Tape Storage: US $139,000.00
One (1) IBM 3584-L52 tape robot base frame with four (4) LTO-3 tape drives and seventy-five (75) LTO-3 tapes.

SAN: US $33,000.00
Two (2) IBM SAN32M-1 Fibre Channel switches.

Network: US $46,000.00
One (1) Cisco Catalyst 4507R chassis with two (2) Supervisor V-10GE engines, two (2) 48-port 10/100/100Base-T Ethernet line cards, and two (2) 1400W power supplies.

Software: US $76,000.00
AIX 5.3, XL Compiler Suite, LoadLeveler, GPFS for AIX Tivoli Storage Manager licenses for two (2) 16-processor systems, with the space management (HSM) option DB2 Universal licenses for two (2) 16-processor systems, with the partitioning option.

Estimated Hardware/Software Cost: **US $1,300,000.00**

Annual Maintenance: **US $260,000.00**

Recommended Configuration

Compute: US $1,296,000.00
Sixteen (16) IBM model 575 8-way Power5+ 2.2GHz systems with 32 GB memory each.

Service: US $404,000.00
Four (4) IBM model 575 16-way Power5+ 1.9GHz systems with 32 GB memory and four (4) 2Gbit/s Fibre Channel HBAs each.

Operational Storage: US $124,000.00
Two (2) IBM DS4800 storage servers, each with two (2) EXP710 drawers populated with fourteen (14) 300GB Fibre Channel disks each.

Archival Storage: US $66,000.00
One (1) IBM DS4800 storage server with three (3) EXP100 drawers, each populated with fourteen (14) 250GB SATA disks.

Tape Storage: US $144,000.00
One (1) IBM 3584-L52 tape robot base frame with four (4) LTO-3 tape drives and two hundred (200) LTO-3 tapes.

SAN: US $33,000.00
Two (2) IBM SAN32M-1 Fibre Channel switches.

Network: US $46,000.00
One (1) Cisco Catalyst 4507R chassis with two (2) Supervisor V-10GE engines, two (2) 48-port 10/100/100Base-T Ethernet line cards, and two (2) 1400W power supplies.

Software: US $152,000.00
AIX 5.3, XL Compiler Suite, LoadLeveler, GPFS for AIX Tivoli Storage Manager licenses for four (4) 16-processor systems, with the space management (HSM) option. DB2 Universal licenses for four (4) 16-processor systems, with the partitioning option.

Estimated Hardware/Software Cost: **US $2,265,000.00**

Annual Maintenance: **US $453,000.00**

Appendix B

Performance Characteristics

Platform	STREAM Triad Aggregate (GB/s)	STREAM Triad Per Processor (GB/s)	MM5 T3A Standard (136x112x33) (GFLOP/s)	M5 T3A Standard Threads Used
Cray X1 64x0.8GHz, SSP	311.4	4.87	6.85	8
Cray X1 64x0.8GHz, SSP	311.4	4.87	11.47	16
Cray X1 64x0.8GHz, SSP	311.4	4.87	21.22	32
Fujitsu VPP5000 64x0.3GHz	N/A	37.50	16.65	10
Fujitsu VPP5000 64x0.3GHz	N/A	37.50	27.82	20
HP Superdome 64x1.5GHz	84.0	1.31	N/A	N/A
IBM Power5+ 575 8x2.2GHz	100.5	12.57	17.05	8
IBM Power5+ 575 8x2.2GHz	100.5	12.57	19.83	16
SGI Altix 64x1.5GHz	124.6	1.95	7.35	8
SGI Altix 64x1.5GHz	124.6	1.95	14.39	16
Sun E25k 72x1.5GHz	76.0	1.06	N/A	N/A

Results compiled from:

http://www.cs.virginia.edu/stream/standard/Bandwidth.html

http://www.csm.ornl.gov/~dunigan/cray/

http://www.mmm.ucar.edu/mm5/mpp/helpdesk/20040304a.html

http://www.ibm.com/systems/p/hardware/system_perf.html

Appendix C
Estimates of Forecast Data Production Rates

Simulation	Resolution	Estimated Output Volume per Run (GB)	Runs per Day	Estimated Data Volume per 30-day Cycle (GB)
ALADIN 5-10km/60hr	200x200x50	1.1	4	131.7
AROME 2.5km/36hr	480x480x70	4.1	4	489.9
LM 7km	401x321x35	2.5	4	296.4
LMK 2.8km	401x361x50	1.8	4	219.9
RegCM3 <25km/240hr	80x125x18	0.3	1	9.0
RegCM3 50km/240hr	31x51x18	0.1	1	1.5
			TOTAL:	1148.4

Note that not all the simulations which RNMA has expressed interest in running are listed here, only those for which resolutions are known and data volumes can be estimated. As a result, it is strongly recommended that a storage volume of at least three times that estimated here be deployed for forecast data.

Appendix D

Estimates of Reduced Data Production Rates

Data Type	Current Volume (GB)	Predicted Growth Rate (GB/month)	Volume after 3 Years (GB)
Climatological Database	15	0.5	33.0
Radar	604	25.9	1536.4
Satellite	500	150.0	5900.0
Forecast	50	100.0	3650.0
TOTAL:	1204	276.4	11119.4

Note that the total data volume here can include both disk and tape, using a hierarchical storage management system such as the proposed Tivoli software. As this estimate may not include all the data that RNMA may wish to store, it is recommended that the sum of archival disk and tape media be at least three times the data volume estimated here.

ATTACHMENT B

INTEROPERATE EQUIPMENT DATA DETAILS – 136 PAGE OPTIONAL SUPPLEMENT

Romania InterOperate
Meteorological Sensors Cost Data

Sensor	Manufacturer	Model	Price	Notes
Present Weather	Optical Scientific	WIVIS/OWI	$ 7,500.00	Optical sensor
	All Weather Inc.	6490	$ 44,515.00	Includes Base Station, Communications Equipment, and shipping
	Coastal Environmental	Laser Drisdometer	$ 4,960.00	Thies model - Already in use at NMA
Soil Moisture Probe	Campbell Scientific	Sentek EnviroSMART (FDR)	$ 2,182.00	Includes access tubes, 81 meters of cable
	Campbell Scientific	Sentek EnviroSMART (FDR)	$ 3,786.00	Includes access tubes, portable datalogger CR215
	MESA technologies	TRIME Tube Access TDR meter	$ 9,433.00	Includes Data Pilot, access tubes and auger set
	MESA technologies	TRIME TDR-EZ TDR Probe	$ 1,450.00	Access tubes, auger set not included. Only 5 meters of cable
	Coastal Environmental	Water Content Reflectometer	$ 1,857.00	Does not include cable $6.50/meter. Need three 30cm probes (quoted) for required depth
Mobile Automatic Weather Station	Campbell Scientific	Custom	$ 4,925.00	Includes CR1000 datalogger
	Coastal Environmental	Zeno Weather Station	$ 7,095.00	Includes datalogger and software
	Vaisala	WXT510	$ 2,320.00	No datalogger, does not measure solar radiation or soil temp
	All Weather Inc.	TAMS	$ 18,771.00	Includes Radio Communication and shipping
Tethersonde	Vaisala	DigiCORA tethersonde sys.	$ 65,000.00	Does not include sondes
Radiosonde	Coastal Environmental	GPSonde	$ 41,664.00	Might not record NO2, SO2; sondes are one time use, does not include balloons
Air Pollution Monitoring	Air Instruments and Measurements	AIM 8500	$ 41,990.00	

PRESENT WEATHER SENSORS

Preliminary Quotation

ZENO® Weather Station

A Versatile, Professional Weather Station Designed for Ease of Use and Future Upgrade.

Coastal Environmental Systems, Inc.
820 First Avenue South ♦ Seattle, Washington 98134
www.CoastalEnvironmental.com

Quotation Number: KP - - *Rev.Date:* *PRICES GUARANTEED FOR ONE YEAR*

PREPARED FOR:
Roger Denick
Burgess & Niple
5085 Reed Road
Columbus, OH 43220
RDenick@burnip.com

PREPARED BY:
Kelly Paletta, Products Manager
800-488-8291 x170
kpaletta@CoastalEnvironmental.com

TERMS: Net 30 (OAC)
STANDARD DELIVERY: 30 - 60 Days ARO
SHIPPING: Prepaid/Add, FOB Seattle, WA

Part Number	Weather Station Data	Commercial Price	Net Price
S1034	ZENO®-3200 Datalogger - w/Housing and Wiring Panel * 32-bit microcontroller, Motorola 68332, 16MHz, Full floating point arithmetic, 16Kb data storage memory * 14 single-ended analog inputs (7 differential) 18 bit resolution, 1-90 samples per second sofware selectable * 2 single-ended, 12 bit resolution input channels * 8 user configurable digital input channels * 6 general purpose digital input/output channels * 1 tipping bucket rain gauge input * Switched excitation AND switched power outputs * Hardware AND Software watchdog timer and power monitor * Real-time clock, battery-backed * Universal Serial Interface	1,205.56	1,130.99
S1214Z	ZENO®-3200 Full Serial I/O Ports, up to 5 serial ports depending on configuration and FREE Universal Serial Interface - configurable on any port in single or multi-drop mode	236.84	223.88
[illegible]288	ZENOSOFT® - Operating system software for ZENO®-3200. Contains menus and parameter setups for sensors, processes and data outputs.	247.37	233.83
S1122Z	CABLE - communications cable for ZENO®-3200 to PC DB9 to DB9, w/adapter, Std.	38.89	36.48
S1036	MEMORY - ZENO®-3200, 1-Mbyte Option of SRAM	178.40	169.06
S1329	MET-EXPERT Firmware: The ZENO - 3200® examines data from each and every sensor to detect common faults and ensure that the sensor is operating within range. If it is not, an alarm message is sent out and logged in the data.	477.89	451.73
S1027ZA	ENCLOSURE - ZENO®-3200, NEMA-4, Fiberglass, for agricultural stations, includes back plate and marine grade feed-throughs for up to 4 sensors	422.22	396.11
S1104Z	SENSOR - Wind Monitor speed, direction, gust, much more...- Prop and vane style	866.67	813.06
S1276Z	SENSOR - Relative humidity and air temperature, +/-3% and +/- 0.4 degrees C accuracy	742.22	696.31
S1081Z	SENSOR - Barometric Pressure, m/n IC 1220A, ±3 mBars	489.47	462.68
S1068Z	SENSOR - Precipitation, Tipping Bucket 6", resolution 0.01 inch	433.68	409.94
S1282	SENSOR - SOIL temperature, embedded thermistor type	75.56	70.88
S1420	SENSOR - Soil moisture TDR (qty 3 @$619 ea)	2,055.00	1,857.00
S1376Z	SENSOR - Present weather sensor, WIVIS optical sensor	8,000.00	7,505.19
S1114Z	SENSOR - Solar Radiation, m/n LI200SZ, Shortwave ± 10%	498.89	468.03
S1026	POWER SUPPLY - ZENO®-3200, Int, 110 VAC 12 VDC with battery backup, includes charger	231.58	218.90
S1138I	SOFTWARE - INTERCEPT® Enhanced	480.00	456.00
S80021	SPECIAL ENGINEERING SERVICES: Configuration and test	450.00	375.00
S1194ZA	TOWER - Heavy duty, 3 meter, for ZENO®-3200, includes mounting hardware for ZENO® and agricultural	510.53	482.58
	Total:	**$17,640.77**	**$16,457.65**

Continued on following page

Part Number	Selected Options	Commercial Price	Net Price
S1073	ZENO®-3200 Transient Protection, All I/O Lines	342.11	323.38
S9973	SENSOR: Present Weather Laser Disdrometer (Optional substitute for S1373Z listed above)	[illegible]	[illegible]

Please Note - Many factors are used to determine the proper solar panel and battery combination for a given system…geographic location, operating temperatures, radio transmission schemes, sampling rate, etc. The solar panel and battery included in this quote is only an example. We will calculate a "power budget" at a later date. When the design is finalized the system may require a different solar/ battery configuration than the one listed here.

205 Perry Parkway
Suite 14
Gaithersburg, MD 20874

Optical Scientific Inc.
(formerly Scientific Technology, Inc.)

301-963-3630 phone
301-948-4674 fax
sales@opticalscientific.com

Home

Environmental Sensors

Atmospheric & Weather Sensors

Company Information

Quality Mission Statement

Contact Us

WIVIS® (Weather Identifier & Visibility Sensor):

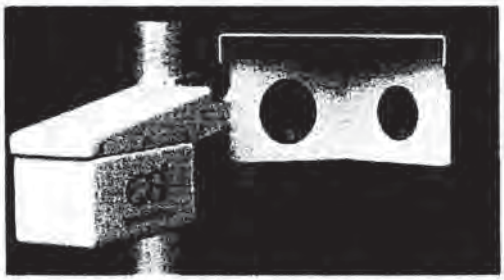

OSi's WIVIS® sensor provides present weather and visibility readings into a very effective combination. This product is our premier road weather instrument. The WIVIS® is widely used by state DOT's across the US and other transportation authorities throughout the world such Japan Highway.

Patented OSi technology uses adaptive environmental algorithms to optimize sensor performance in all weather conditions. OSi has added several new features including WMO codes, automated calibration, and optional hail & ice pellet detection to further enhance sensor performance. WIVIS® analyzes multiple channels of data to calculate the present weather and visibility. This approach recognizes that weather sensing requires a dynamic measurement, continually adapting to the environment at the moment. A new self-compensating algorithm makes field calibration unnecessary for up to 2 years.

WIVIS® reports precipitation occurrence, precipitation type, precipitation intensity, and precipitation accumulation, in a variety of weather codes (NWS / WMO) and units of measure (English / SI) as well as visibility. The WIVIS® is perfect for general weather observation, transportation information, and other similar applications. It is arguably our most successful commercial grade weather instrument.

WIVIS® Advantages:

- Advanced Optical Technology
- Easy Installation
- Reports NWS/WMO formats
- Self Diagnostics & Testing
- Rugged Design
- Long-term Reliability
- Low Maintenance
- Enhanced EMI Protection

WIVIS® Reports:

- Precipitation occurrence
- Precipitation type and intensity

- NWS and WMO codes
- Visibility (MOR)
- English and SI Units

WIVIS® Specifications

WIVIS® Accessories

ORG

OWI

LEDWI

LOA-004

WIVIS® and OWI™: ScTi's Effective, All-Weather Solution for Visibility and Present Weather Observation

ScTi's WIVIS® and OWI™ sensors are the best solution for remote, real-time present weather observation. Both instruments use advanced optical technology to measure precipitation rate and identify precipitation type. The WIVIS® sensor gives you the added bonus of visibility measurement making it the best present weather detector. The OWI™ is ScTi's more affordable alternative with true present weather sensing capabilities.

From Antarctica to Saudi Arabia and Switzerland to Australia, our sensors are relied upon worldwide. The WIVIS® and OWI™ can be found working for universities, state DOTs and municipalities, airports, and many other government agencies. If your needs involve airline safety (in *AWOS* systems), road weather, research, or synoptic observation, ScTi's present weather sensors will do the job.

Advantages of the WIVIS® and OWI™

1) Advanced Optical Technology
2) Rugged Design
3) Easy Installation
4) Long-term Reliability
5) Reports NWS/WMO formats
6) Low Maintanence
7) Self Diagnostics & Testing
8) Enhanced EMI Protection

Advanced Optical Technology

The WIVIS® and OWI™ use the principle of optical scintillation to measure precipitation. This technology has widespread acceptance from many authorities in both weather and environmental sensing including the NWS, FAA, MIT, NASA, USAF, and USGS.

Rugged Design

The WIVIS® and OWI™ have very tough, lightweight frames. The frame can withstand the rigors of almost any climate. Lens heaters keep the optical path clear of ice during wintry weather. The instrument enclosure is rated IP 66.

Easy Installation

Both sensor heads have a U-bolt mounting configuration that allows you to attach the unit to a vertical pole or horizontal bar. (No special mounting pole required.)

Long-term Reliability

ScTi present weather sensors have more than 50 million hours of proven field operation in all climates. MTBF (Mean Time Between Failure) for ScTi present weather instruments is ~35,000 hrs. The WIVIS® and OWI™ operate 24 hours a day, 7 days a week.

Reports NWS/WMO Formats

Both of the sensors use NWS codes as standard & WMO codes as optional.

Low Maintenance

The WIVIS® and OWI™ use proprietary algorithms that eliminate the need for frequent calibration. Field calibration every two years is typical.

Self-Diagnostics and Testing

The WIVIS® and OWI™ have AGC (Automatic Gain Control) to compensate for signal loss. The sensors also employ a comprehensive self-test that updates once per minute and reports any potential problems in the output message.

Enhanced EMI Protection

Both present weather sensors have enhanced EMI protection that allow them to operate in harsh electro-magnetic environments.

No other present weather instruments provide this powerful combination of high technology and proven reliability!

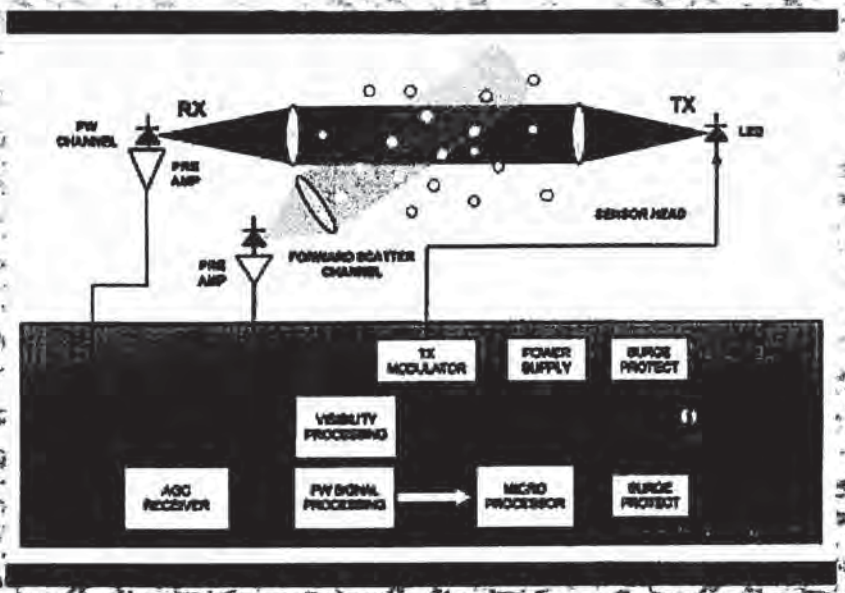

Functional block diagram of the WIVIS® sensor.

WIVIS® Reports:
Visibility (MOR)
Precipitation occurrence
Precipitation type and intensity
NWS and WMO codes
English and SI units

OWI-130-xR-WIVIS®
where "x" =
A for 115 VAC, 50/60 Hz
B for 230/240 VAC, 50/60 Hz
C for 100 VAC, 50/60 Hz
D for 12 VDC
E for 220 VAC

WIVIS® Options
HIP-100 Hail/Ice Pellet Sensor: Detects hail and ice (not stand-alone).
QCS-130 Qwik Collect Software: Collects, displays, and archives data (compatible w/all Windows systems).
TST-130 Field Test Kit: for testing & verification of calibration.
LDM Limited Distance Modems: for distances > 100 ft. (max = 7 miles).
OWI-131/132/133 WIVIS Kit: w/o enclosure (user can use their own box).

OWI™ Reports:
Precipitation occurrence
Precipitation type and intensity
NWS and WMO codes
English and SI units

OWI-120-xR OWI™
where "x" =
A for 115 VAC, 50/60 Hz
B for 230/240 VAC, 50/60 Hz
C for 100 VAC, 50/60 Hz
D for 12 VDC
E for 220 VAC

OWI™ Options
HIP-100 Hail/Ice Pellet Sensor: same as WIVIS option above.
QCS-120 Qwik Collect Software: same as above.
TST-130 Field Test Kit: see above.
LDM Limited Distance Modems: see above.
OWI-121/122 OWI Kits: w/o enclosure.

Top: WIVIS® sensor provides weather readings to an ITS system.

Left: When visibility is not required, the OWI™ is great for present weather detection.

Optical Scientific, Inc.

Present Weather Sensor Specifications

Performance Specification	WIVIS	OWI
Present Weather		
Present Weather Codes	More than 50 NWS and WMO (optional) codes	More than 50 NWS and WMO (optional) codes
Present Weather Type Identification	Rain, Snow, Drizzle, Mixed, Hail*, Ice Pellets*	Rain, Snow, Drizzle, Mixed, Hail*, Ice Pellets*
Sensor Data Update Rate	Once per minute	Once per minute
Rain		
Rain Dynamic Range	0.1 to 3000 mm/hr	0.1 to 3000 mm/hr
Rain Accumulation	0.001 to 999.999 mm	0.001 to 999.999 mm
Rain Accuracy	5% Accumulation	5% Accumulation
Rain Resolution	0.001 mm	0.001 mm
Snow		
Snow Dynamic Range	0.01 to 50 mm/hr water eq.	0.01 to 50 mm/hr water eq.
Snow Accumulation	0.001 to 999.999 mm water eq.	0.001 to 999.999 mm water eq.
Snow Accuracy	20% Accumulation (depends on snow density)	20% Accumulation (depends on snow density)
Snow Resolution	0.001 mm	0.001 mm
Visibility		
Visibility Dynamic Range	0.001 to 3 km (10 & 50 km optional) 0.001 to 1 mile (7 & 30 miles optional)	N/A
Visibility Accuracy	20% up to 3 km	N/A
Visibility Time Constant	5 minute harmonic	N/A
Visibility Contrast Threshold	5%	N/A

*With optional HIP-100 Sensor Attachment

Electrical Specification	WIVIS	OWI
Power Requirements	110 VAC, 50-60 Hz, 50 VA Others available	110 VAC, 50-60 Hz, 40 VA Others available
Fusing	User Supplied 1.0 A Slow Blow	
Signal Output	RS-232 ACSII	RS-232 ASCII
Transient Protection	All power and signal lines protected	

Environmental	WIVIS	OWI
Temperature	-40° to 50°C (-40° to 122°F) -55° to 55° C optional	-40° to 50°C (-40° to 122°F) -55° to 55° C optional
Humidity	0-100%	0-100%
Precipitation/Dust	NEMA-4 type protection	NEMA-4 type protection

Physical	WIVIS	OWI
Head Size	740mm W x 118mm H x 250 mm D	740mm W x 118mm H x 250 mm D
Head Weight	4.5 kg	4.5 kg
Enclosure Size	305mm W x 465 mm H x 230 mm D	305mm W x 465 mm H x 230 mm D
Enclosure Weight	11 kg	11 kg

File: OWI-WIVIS Specifications.doc -- rev 01/04/03

301-963-3630 phone • 301-948-4674 fax • 205 Perry Parkway, Suite 14 Gaithersburg, MD 20877-2141 USA • www.opticalscientific.com

Precipitation

Thies CLIMA

The new generation of high quality and reliable precipitation identification sensor

Laser precipitation monitor (Disdromete

State of the art technology with best cost-performance ratio

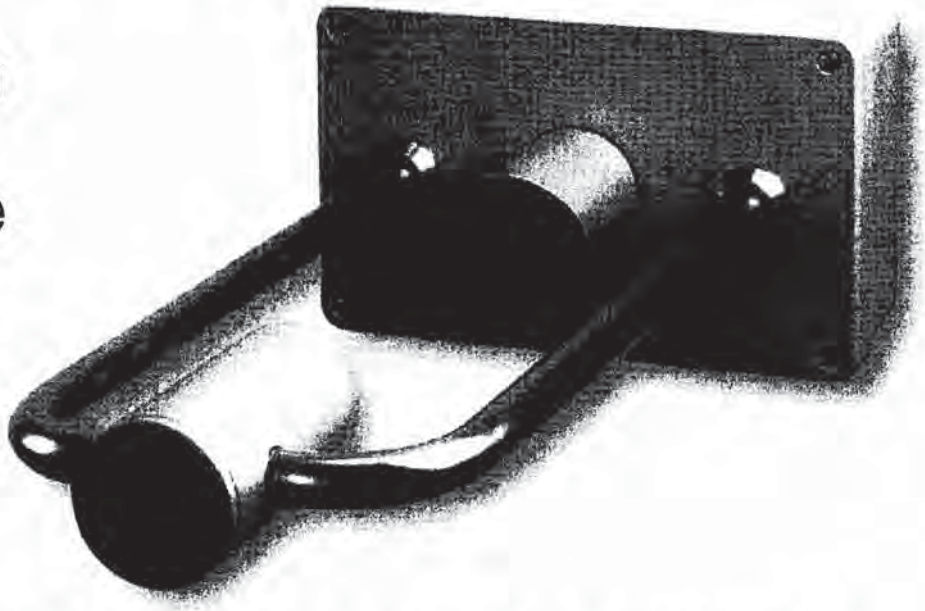

The Thies Laser Disdrometer is especially designed for the use in several applications. The optical laser basing measuring principle guarantees a reliable and accurate measurement of all known kinds of precipitation. It is possible to measure the amount, the intensity also as the particle size and the velocity of precipitation. A main advantage of the disdrometer is to measure particles down to 0,16 mm diameter.

The disdrometer detects and discriminates the different arts of precipitation as drizzle, rain, hail, snow, snow grains, graupel (small hail / snow pellets), and ice pellets with his reliable Laser optic.
The disdrometer calculates the intensity (rain rate), volume and the spectrum of the different kinds of precipitation and makes necessary plausibility checks.
Latest state of the art technology like DSP, and high quality optical components stand for safely measurement.
All data will be transmitted via a galvanic isolated RS485 interface to further systems with different protocols and formats. SYNOP according table 4680, and METAR according table 4678 are implemented.

Typical applications		The main advantages in one view
• traffic control • meteorological monitoring		• rugged, compact, and light • nearly maintenance-free • easy mounting

- scientific examination
- airport observation systems
- hydrology

Also for use in harsh environmental conditions

- DSP for computing power
- EMC protected housing
- particle size from 0,16 mm diameter
- extended heaters for use in harsh environmental conditions

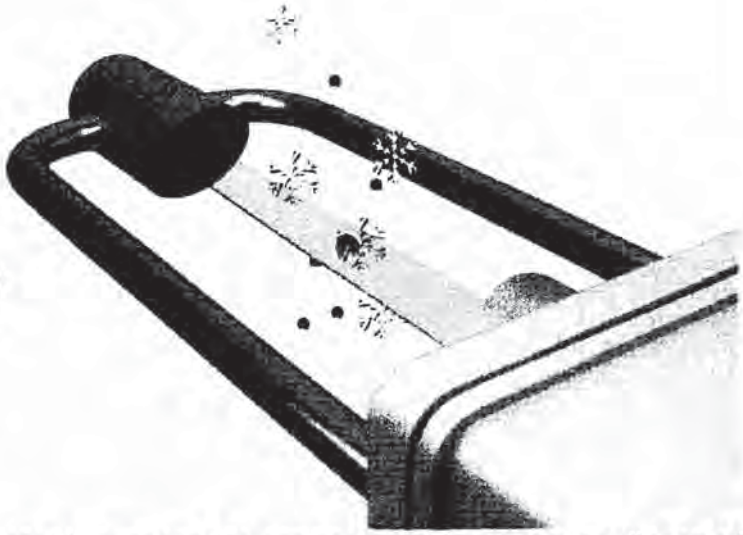

The disdrometer is nearly maintenance- free, and the optical components are secured against environmental influence. Integrated heaters guarantee a reliable use all over the year.
A special technology eliminates a possible influence of extrinsic light. The disdrometer controls itself via different features in order to compensate temperature and dirt influences. For communication the RS 485 output as well as two digital outputs are available.
In order to integrate other important meteorological parameters, the disdrometer is prepared to connect additional sensors like wind speed, wind direction, temperature and humidity.
All measured values will be transmitted via the RS485 output.
The use of flash memory allows remote software uploads.

Laser precipitation monitor, Ordercode: 5.4110.00.000

Main characteristics

Principle of operation	Laser 785 nm, max 0,5 mW optical power, Laserclass 1M
Measuring area	45 cm² (22.5 x 2.0 cm), 7 inch² (8.858x 0.787 inch)
Environmental	-40…+70°C; 0 ..100% rH, Optional –60…+70°C; 0…100%rH
Protection	IP 65
Mounting	Mast 48 mm…102 mm; 1.9…4 inch
Power	24 V AC /750 mA, alternative 230 VAC or 115 VAC incl. std. heaters
Housing	al, die cast, stainless steel, 270x 170x 540 mm

Weight	4.8 kg
Data output	RS485 1200...115200 Bd, full duplex 2 opt. coupler 24 V DC 1 mA
Optional inputs	PT100, 0-1 V, 0-1000 Hz, serial synchronous
Precipitation	
Particle size	0.16....7 mm
Particle velocity	0.2 ... 20 m/s
Distinction for kind of precipitation drizzle, rain, hail, snow	> 97 % in compar. with synopt. observer
Minimum intensity	0.005 mm/h drizzle
Maximum intensity	250 mm/h

Info Home

allweatherinc

Advanced Weather Reporting For An Unpredictable World

1165 National Drive
Sacramento, CA 95834

Tel (916) 928-1000
Fax (916) 928-1165
EMAIL sglander@allweatherinc.com
http://www.allweatherinc.com

Date: June 6, 2005

Quotation # : 111668

To: Burgess & Niple
5085 Reed Rd.
Columbus, OH 43220

Valid for 90 Days

TERMS: Per Attached All Weather Inc Terms and Conditions of Sale

Attn: Roger Denick (rdenick@burnip.com)
Fax#:
Phone#: (614) 459-2050

PRESENT WEATHER DATA SYSTEM QUOTATION
(International)

PRESENT WEATHER SATELLITE FIELD STATION (quantity 1) (Quantity discounts will apply)	$ 26,260
PRESENT WEATHER BASE STATION	$ 18,255
SUB-TOTAL	$ 44,515
PACKING, HANDLING & L/C CHARGES	$ 1,169
INLAND FREIGHT CHARGES	
FREIGHT TO (Air Freight is estimate, actual cost will be billed)	$ -
INSURANCE	$ -
System Total, Ex-Works, All Weather Inc, Sacramento:	$ 45,684

NOTES: Civil Works, shipping charges and applicable taxes are the buyer's responsibility unless other arrangements are made.

If you place an order based on this quote, please ensure you include a reference to the Quote Number on your P.O.

Delivery is in accordance with INCOTERMS 2000

Delivery is approximately 90-120 Days ARO at the time of this quotation. Call/FAX to confirm.
Submitted this Date By:

Steve Glander

PRESENT WEATHER SATELLITE FIELD STATION (quantity 1):

Qty	Part Number	Description	Unit Price	Total
PRESENT WEATHER (PRECIPITATION IDENTIFICATION) SYSTEM				
1	6490	Present Weather Sensor	$ 18,720	$ 18,720
1	M488176	Mounting Bracket	$ 125	$ 125
DATA ACQUISITION				
1	1190-I	Data Acquisition and communications Unit	$ 3,082	$ 3,082
1	11902-A	UHF Radio Datalink Kit 450 - 470 Mhz	$ 2,325	$ 2,325
1	Z005127	Antenna, Yagi	$ 100	$ 100
1	M491541	25ft Cable	$ 83	$ 83
1	M488131	Solar Power Kit - 50W Includes: Mounting Hardware; Charge Controller; 50 W Solar Panel, 100 AH Battery; Battery Enclosure	$ 1,825	$ 1,825

PRESENT WEATHER BASE STATION:

Qty	Part Number	Description	Unit Price	Total
1	2090-I	Central Data Processor (CDP), with: Includes: 17" Color LCD Flat Panel Screen, Stormfront Display Software Keyboard, Mouse, 2-Button w/PS2 Connector, Mouse Pad	$ 6,785	$ 6,785
1	M406126-00	Laser Printer A4	$ 1,755	$ 1,755
1	11902-A	UHF Radio Datalink Kit 450 - 470 Mhz	$ 2,325	$ 2,325
1	Z005127	Antenna, Yagi	$ 100	$ 100
1	M491541	25ft Cable	$ 83	$ 83

ENGINEERING CONFIGURATION, SYSTEM SOFTWARE & DOCUMENTATION $ 6,457

SYSTEM INTEGRATION AND TEST $ 750

System Total, Ex-Works, All Weather Inc, Sacramento: $ 44,515

OPTIONAL DATA COMMUNICATIONS VIA CELLULAR MODEM

Quantity	Part Number	Description	Unit Price	Total
2	M406152-00	Cellular Modem	$ 1,200	$ 2,400

Present Weather Field Station Network for Romania
System Description Summary

Field Station:

Equipment:

- Present Weather Sensor
- Data Collection Electronics
- Communications Hardware
- Solar Power

Functions:

- Sense and Report Precipitation Identification (Precipitation type, amount, rate, and sensor status)
- ASCII data output each minute
- Configurable data logging capabilities
- Wireless data transmission
- Removable data storage

Base Station:

Equipment:

- Central Data Collection Processing Computer
- Laser Printer
- Communications Hardware

Functions:

- Stormfront Graphics Display Software (Graphs, Charts, Clickable map, etc.)
- Printing capability
- Data retrieval from 1 to N field stations
- Database storage
- Configurable Data Display Screen
- Wireless data transmission
- Customizable Reports

1. INTRODUCTION

1.1 *The Model 6490 Sensor Improves Your Ability to Measure Present Weather*

The Model 6490 optically measures precipitation induced scintillation and applies algorithms to automatically determine the precipitation occurrence, type, rate. The sensor is vastly superior to traditional type sensors and offers the reliability and proven performance you need.

All Weather Inc.'s Model 6490 precipitation sensor provides accurate measurement of precipitation in all weather conditions. Designed for rugged, unattended operation, these sensors have been field proven in adverse environments around the world in locations such as Antarctica, Europe, the Far East, and North America.

The 6490 offers many features and options including:

- ✓ NWS or WMO weather code formats
- ✓ English or metric units of measure
- ✓ Past data (15 min and 60 min)
- ✓ Automated calibration
- ✓ HIPS Hail and ice pellet detection (option)
- ✓ 12 VDC power (option)

1.2 *Performance Specifications for the Model 6490*

The 6490 was designed to measure precipitation in all weather conditions. The general specifications of the sensor are provided in the table below. The exact specifications may vary depending on the firmware and options provided with the unit.

Performance Specification	
PRESENT WEATHER	
PW Codes Reported	More than 50 NWS & WMO codes
Rain Dynamic Range	0.1 to 3000 mm/hr
Rain Accumulation	0.1 to 999.999 mm
Rain Accuracy	5% Accumulation
Rain Resolution	0.001 mm
Snow Dynamic Range	0.01 to 300 mm/hr water eq.
Snow Accuracy	10% Accumulation
Snow Resolution	0.001 mm
Hail & Ice Pellet Accuracy	Correctly report 90% of the time
Data Update Rate	Once per minute

N o t e: The Hail & Ice Pellet Sensors (HIPS) is optional - ignore references to hail and ice pellets unless the option was ordered!

Electrical Specifications	
Power Requirements	Factory selectable 110/220 VAC, 50/60 Hz @ 50 VA (12 VDC @ 3 A power supply optional)
Fusing	User supplied - See Section 2.3.2 for fuse size
Signal Output	RS-485 ASCII 4800 baud, 8 data bits, no parity, 1 stop bit
Transient Protection	AC power and RS-485 signal lines fully protected

Environmental Specifications	
Temperature	-40 to 55° C (-40 to 131° F)
Humidity	0-100%
Precipitation/Dust	NEMA-4X type protection

Physical Specification		
Size -	Sensor Head	730 mm W x 115 mm H x 230 mm D
	Electronics Enclosure	305 mm W x 465 mm H x 210 mm D
	Hail & Ice Pellet Head	865 mm W x 90 mm H x 216 mm D
Weight	Sensor Head	4 kg including cables
	Electronics Enclosure	10 kg
	Hail & Ice Pellet Head	2.3 kg including cables
Cable Lengths -		
	Sensor Head	5 meter (up to 10 m optional)
	Hail & Ice Pellet Head	1.5 meter

PORTABLE SOIL MOISTURE SENSORS

Wednesday, June 08, 2005

Roger Denick
rdenick@burnit.com
614-459-2050

MESA is pleased to quote you the following TRIME products:

Description	Item Number	Qty	Unit Price
TRIME-Tube Access Probe with intelligent probe head: T3-44-IPH type T3 and TRIME Intelligent Probe Head with TDR electronics: RS-232 Serial interface, **5-meters** of Teflon coated cable and mating connector, programmable. For use in TRIME standard access tubes, mates with TRIME Data Pilot.	303001+ 300009	1	$4695.00
TRIME Data Pilot for Data Management of TRIME TDR probes: Field portable system using customers supplied Compaq iPAQ with 32-MB memory. NiCd 9.6 V/1000 mAh rechargeable battery. RS232/24V connection for TRIME probes, USB for data transfer between PC and Data Pilot, TRIME data management (Window CE software), Aquapac weatherproof vinyl case with shoulder strap	99200	1	$2779.50
HP iPAQ pocket PC (customer supplied)	n/a	1	~$400.00
TRIME 44-mm access tube 1-m long (plastic cutting head, expandable tube-bottom stopper, gasket, cap) (p/n TT-44-1)	TT-44-1-P	1	$31.00
Complete Auger Set for TRIME 44-mm for 1-meter long access tubes, Includes: screw auger handle with bit and stopper socket, 1-meter long steel guide, Ramming head, Nylon head protector, Tripod with clamping device (p/n TAS-44)	303021	1	$1435.00

Terms and Conditions:

Delivery: 4 weeks ARO
Payment: Credit Cards: MC, VISA, Net 30 days with approved credit.
Pricing: Valid for 60 days.
FOB point: Medfield, MA 02052-1507
Federal Tax ID Number: 04-3125128
Warranty: One-year parts and Labor

MESA Systems Co.

John Kussmann
John.kussmann@mesasystemsco.com

Thursday, May 12, 2005

Roger Denick
rdenick@burnit.com
614-459-2050

MESA is pleased to quote you the following TRIME products:

Part Number	Product Description	Unit Price US Dollars
T-EZ	TRIME-EZ Intelligent TDR Probe: 7...14 V dc power required, IMP 232 MICRONET interface, RS232 serial & analog output 0...1 V, (5-meters of cable & mating connector) 160-mm probe rods	$1100.00
T-ASC	TRIME RS-232 / Analog data and power connector cable 1.5 meter	$225.00
T- PRS	Preparation rod set for TRIME EZ, Two SS rods and	$125.00

Terms and Conditions:

Delivery: Stock to 4-weeks ARO
Payment: Credit Cards: MC, VISA or Net 30 days with approved credit.
Pricing: Valid for 60 days.
FOB point: Medfield, MA
Federal Tax ID Number: 04-3125198
Warranty: One year parts and Labor

MESA System Co.

John Kussmann
John.kussmann@mesasystemsco.com

MESA Systems Co.

6 West Mi
3
Medfield, .
USA
Tel. 508-3.
Fax. 508-3

TRIME EZ (EZC) Intelligent TDR probe

Spec Sheet Back

- Measure direct %vol soil water content
- Advanced TDR automatic curve-analyzing electronics
- 0...100% vol soil water-content measurement
- Reliable multi-point digital/serial networking
- Bulk soil electrical conductivity up to 50dS/m

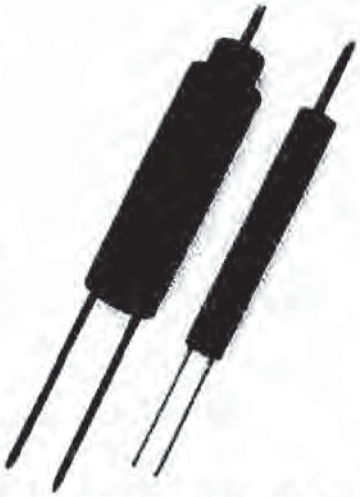

The intelligent rod probes are highly sophisticated and extremely robust. A unique feature is the integrated TDR measuring electronics in the probe's body, achieving the greatest accuracy possible. With sensor, integrated networking capability cable lengths of up to 2 km are possible when connecting the IMP-Bus version.

Select from a variety of rod lengths, for different measuring volumes and for applications in highly saline conditions. Power and timing can be controlled on-line to conserve power consumption. The TRIME-EZ requires only 8 mA stand-by and 250 mA during the 10 seconds measuring time.

The TRIME-EZ is the standard probe for materials with bulk electrical conductivity of up to 2dS/m.

TRIME-EZC is designed for measuring in highly saline media: up to 8dS/m bulk EC.

When connected to the **TRIME DATA PILOT** the TRIME EZ measured data can be managed in the field. The Data Pilot runs the TRIME EZ using the RS-232 serial interface.

The TRIME-EZ features interfaces for power supply and IMP232-micronet Databus for data acquisition and communications. Optional configurations offer a RS232/V24 interface for connecting a MS-dos-based PC/portable and the external power supply (7..15V dc @ 280 mA). You can also add an analog output 0..1V or 0(4)..20 mA for interfacing to external devices e.g. data logger.

TRIME EZ (EZC) Intelligent TDR probe

FEATURES	TECHNICAL DATA
Power Supply:	7V....15 V dc
Current:	8-mA standby, 250 mA at 12 V dc for 10...15 seconds during measurement
Accuracy: Range 0...40%: Range 40...70%:	TRIME-EZ (EZC) +/-1% (+/-2%) +/-2% (+/-3%)
Repeatability	+/-0.5% of calibration
Bulk electrical conductivity:	TRIME-EZ (EZC) 0...2dS/m (0...8dS/m)
Pore water electrical conductivity:	TRIME-EZ (EZC) 0...10dS/m (0...45dS/m)
Cable length:	5-meters with mating connector
Temperature operating range:	-15 C...50C (extended range on request), Maximum drift .+/- 0.5%
Ouptput and interface:	IMPbus, (4-20mA and RS-232 optional)

MESA Systems Co.
6 West Mill Street, Unit 3
Medfield, MA 02052
USA
Tel. 508-359-5322
Fax. 508-359-5339

MESA Systems Co.

6 West Mi
3
Medfield,
USA
Tel. 508-3.
Fax. 508-3

T3/T3C Tube Access Probe (44mm)

- Water content profiles to a depth of 3 meters
- Monitor any number of access tube sites with one portable system
- Free yourself from hazardous radioactive materials restrictions
- Easy to install robust plastic access tubes Portable Moisture Meter, Versions FM2 and FM3
- Water content profiles to a depth of 3 meters
- Fast, reliable and portable measuring of volumetric moisture

Specifications

The TRIME-TDR tube access probe is the first and only system designed especially for vertical water content profiling. For the first time rapid, non destructive measurements of water content profiles are possible without the use of hazardous radioactive materials.

The tube access probe consists of a cylindrical PVC-body, which has four spring-mounted, curved aluminum plates located on opposite sides of the probe body. Each set of plates function as TDR-wave guides (like a traditional rod-probe), that presses against the inside of the access tube once the probe is inserted. The tube access probe is designed to measure from the inside of the special TECANAT plastic access tubes. The tube access probe easily slides up or down the access tube to the location where a measurement is to be made. The tubes may be left in the soil and/or removed. Access tube installation is conveniently accomplished using a specially developed auger/drilling tube insertion set. Accessories for stopping the tube bottom and capping the tube top are standard. Other insertion methods are also possible. We paired with a TRIME-FM the maximum available length of probe cable is 3.5 m. For longer lengths contact MESA.

Measuring Volume

The effective vertical penetration height of the tube access probe is approximately 15 cm, (analogous to the length of a 15 cm rod probe). Penetration depth, into the soil is on average 6 cm, having it's greatest sensitivity in the immediate vicinity of the access tube outer diameter and decreases exponentially with distance. For precise description, please refer to the "comments on the tube access probe".

Accuracy

A measuring accuracy of ±2 vol.% can be achieved, provided no air gaps exist between soil and TECANAT access tube. Close soil tube contact is very important and can be ensured by a careful installation of the access tubes using our auger equipment. The TRIME tube access probe is suitable for soils with bulk soil electrical conductivity up to 1 dS/m.

Comments

The T3 auger set for the installation of the access tube into soils represents the best compromise between achieving close contact with the soil and minimizing soil compression. The TRIME-T3 probe has found success in other non-soil applications.

TRIME tube access probe is also available with the Intelligent Probe Head (IPH). Together the tube access probe and IPH becomes a down tube system with integrated electronics. This allows for cable lengths of up to 25 meters with the option of being networked or operated by the battery powered hand-held analog display unit TRIME-HD.

TRIME-T3 tube access probe together with the TRIME-FM3 Field moisture meter.

The TRIME-FM is a truly portable field-measuring device for % volumetric moisture measurement in soils and other porous materials. When combined with one of the broad selection of probes, the TRIME-FM is ideal for many demanding applications including highly saline materials.

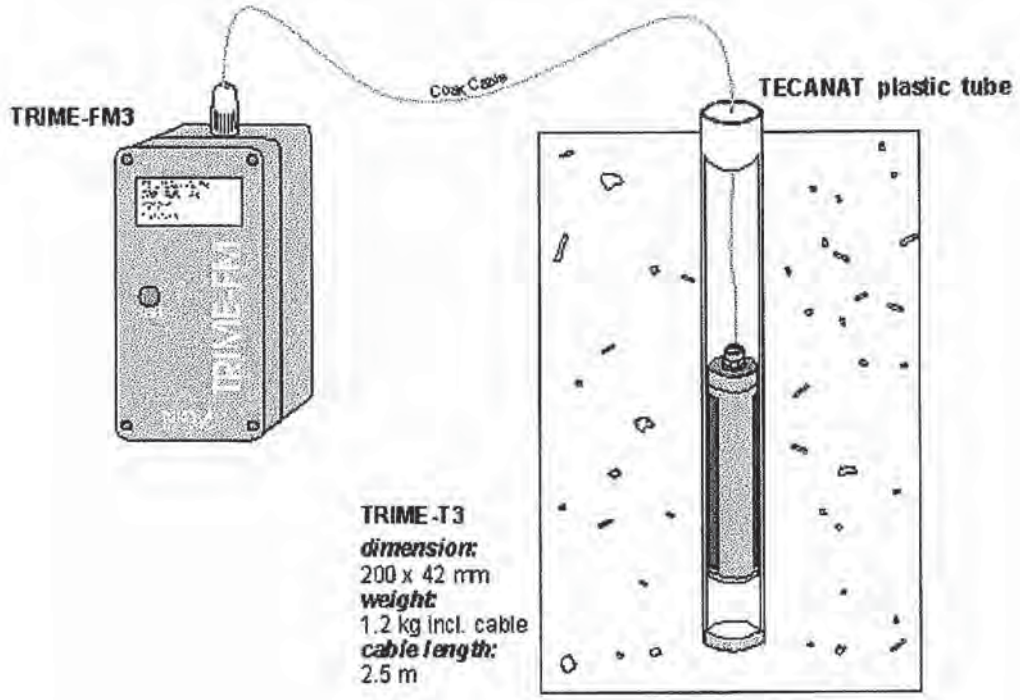

MESA Systems Co.

6 West Mi
3
Medfield,
USA
Tel. 508-3.
Fax. 508-3

Auger set for 44-mm access tubes

Spec Sheet Back

- Designed for optimum access tube - soil contact
- Minimum disturbance of soil structure and texture
- Field-proven compact and easy to work with
- Completely self-contained with flexible probe options

A special drilling set for access tube installation in homogeneous soils has been developed by TRIME. The system offers the best compromise between achieving a close contact and a minimum of soil compression.

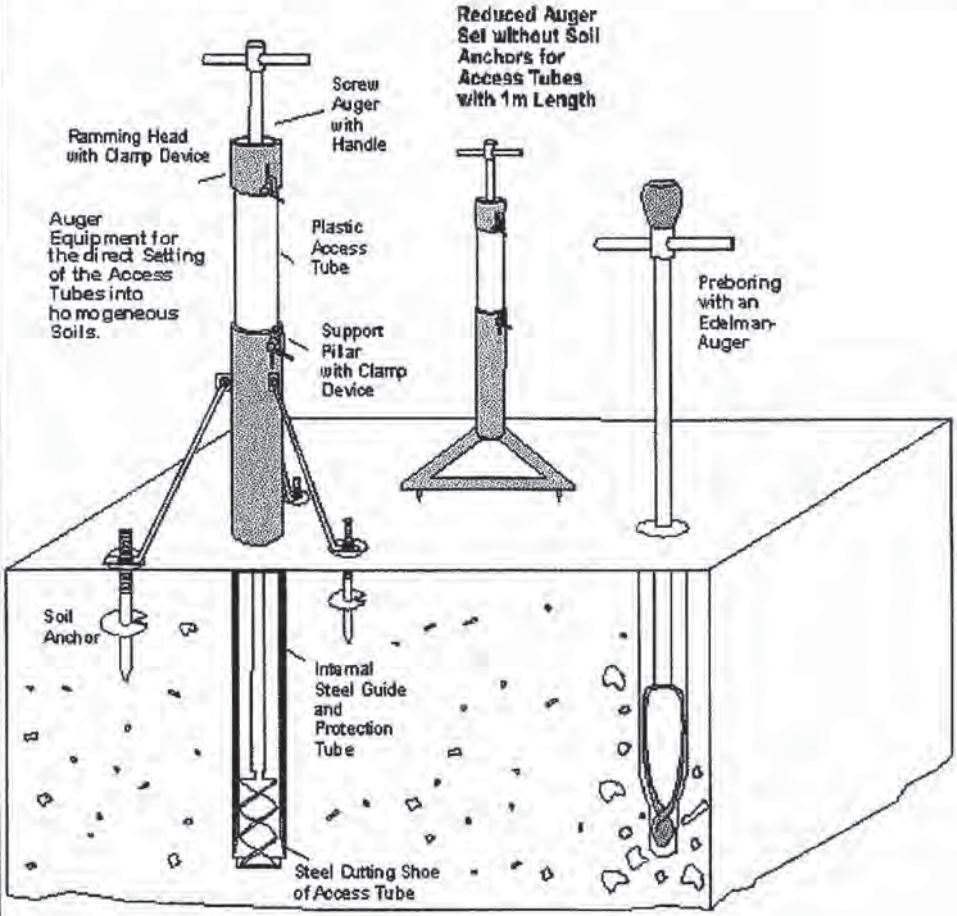

The TRIME auger equipment consists of:

- An access tube support pillar with three soil anchors
- A ramming head with clamp device
- A screw auger with handle
- An internal steel guide/protection tube

A small version of the support pillar without anchors is also available for 1-meter access tubes.

The screw auger is used to drill out soil. After the soil is removed, the tube can be easily hammered into the soil. This cycle is repeated until the tube is sunk to the appropriate level. The internal steel protection tube is then removed and the access tube is sealed with a rubber stopper and cap.

With the described auger equipment, it is possible to set the access tubes directly into homogenous soils without pre-boring. The more skeletal the soil becomes, the more difficult the sinking gets. In this case, we suggest pre-boring with an Edelman auger or pneumatic soil-sampling device prior to installing the tubes. Other methods have also been used successfully.

MESA Systems Co.

6 West Mi
3
Medfield,
USA
Tel. 508-3.
Fax. 508-3

TRIME Data Pilot

The TRIME Data Pilot is an easy to use field portable data management devices based on our custom software and the Compaq iPAQ Pocket PC running Windows CE. Designed for field data management, right at the time of measurement with a clear graphical user interface. If you collect a lots of data points you can have fast and accurate soil moisture measurements data without pencil and paper.

Connect to any TRIME device including: TRIME-IPH, TRIME-FM, TRIME-ES and TRIME-EZ/IT using the RS-232 interface. The serial format provides the means for directly extracting the recorded moisture readings with the TRIME-Data-Pilot and storing them in a file. Incorporate site-specific data, written comments even verbal notes can be recorded directly into the Data Pilot, on location.

The standard menu structure on the Palm-PC is as shown in the following example:

Meas.-Point 27: Position X, Hillside, Depth: 1meter
Date/Time: 19.03.2001 14:23
Moisture: 25,4%
TDR-Level: 65

Using Windows-CE, the recorded data can be easily analyzed with MS-EXCEL. The Palm-PC provides the USB interface as the standard for the transfer of data.

The Palm includes a flexible protective Palm / Battery-Case that ensures that the TRIME-Data-Pilot works reliably even in damp and wet surroundings.

Specific TRIME probes can be operated directly from the TRIME-Data-Pilot by installing an additional battery inside the Data-Pilot's case.

Features

- **Attractive graphic user-interface**
- **Create up to 999 measurement location files**
- **Data can be imported to EXCEL**
- **Connectable to TRIME-IPH, TRIME-EZ/IT, TRIME-ES, TRIME-FM**
- **Convenient RS-232 serial interface**

TRIME Data Pilot

Palm-PC	Compaq iPAQ incl. PC-Card-Jacket and 8MB Flash-Card
Power Supply	Internal iPAQ Li-Ion Battery for 6 hours running time. TRIME-Battery NiCd 9.6V/1000mAh for 400 TRIME measurement cycles.
Charging	1 x original iPAQ Charger 110..220VAC 1 x TRIME-Battery-Charger 110..220VAC
Interfaces	1 x RS232/V24 for connection to the TRIME-probe. 1 x USB for the data transfer with the PC
Software	Data-Management-Software developed by IMKO
Water-Protection	IP65, NEMA 12, flexible housing. All connectors have IP67 protection.
Dimensions	250x170x60mm

MESA Systems Co.
6 West Mill Street, Unit 3
Medfield, MA 02052
USA
Tel. 508-359-5322
Fax. 508-359-5339

Thursday, May 12, 2005

Roger Denick
rdenick@burnit.com
614-459-2050

MESA is pleased to quote you the following TRIME products:

Part Number	Product Description	Unit Price US Dollars
T-EZ	TRIME-EZ Intelligent TDR Probe: 7...14 V dc power required, IMP 232 MICRONET interface, RS232 serial & analog output 0...1 V, (5-meters of cable & mating connector) 160-mm probe rods	$1100.00
T-ASC	TRIME RS-232 / Analog data and power connector cable 1.5 meter	$225.00
T- PRS	Preparation rod set for TRIME EZ, Two SS rods and	$125.00

Terms and Conditions:

Delivery: Stock to 4-weeks ARO
Payment: Credit Cards: MC, VISA or Net 30 days with approved credit.
Pricing: Valid for 60 days.
FOB point: Medfield, MA
Federal Tax ID Number: 04-3125198
Warranty: One year parts and Labor

MESA System Co.

John Kussmann
John.kussmann@mesasystemsco.com

CAMPBELL SCIENTIFIC, INC.

815 W 1800 N · Logan, UT 84321-1784 · USA · (435) 753-2342
FAX (435) 750-9540 · www.campbellsci.com
Fed. I.D. #87-0305157 · DUNS#06-798-0730

*** Please reference our Quote number on your Purchase Order ***

PROFORMA INVOICE **PRICE QUOTATION**

Quote Number: 47727
Quote Date: 31-MAY-05
Page: 1 of 4
Valid Through: 30-JUL-05

USER ADDRESS:

ROGER DENICK
BURGESS & NIPLE
5085 REED RD
COLUMBUS, OH 43220

TEL: (614) 459-2050
FAX: (614) 451-1385

RFQ#	Terms	Freight Terms	Est. Ship Date	CSI Contact
	UPON APPROVAL	PREPAID & ADD	30 DAYS ARO	DAVE MEEK

Line	Item	**CO	Description	Qty Ord	Unit	Selling Price	Ext. Price
1	NOTE		- - !!! PRELIMINARY !!!	1	EACH	0.00	0.00
2	NOTE		- - ---WEATHER STATION---	1	EACH	0.00	0.00
3	NOTE		- - ---W/ WIRED WATER CONTENT PROBES---	1	EACH	0.00	0.00
4	NOTE		- - ---WEATHER SENSORS / MOUNTS---	1	EACH	0.00	0.00
5	03001-L	US	03001-L RM YOUNG WIND SENTRY SET	1	EACH	575.00	575.00
5	9661	US	CABLE 22 AWG 1 TWISTED PAIR SANTOPRENE	11	FEET	0.30	3.30
5	9720	US	CABLE 22 AWG 2 TWISTED PAIR SHIELDED SANTOPRENE	11	FEET	0.54	5.94
6	019ALU	US	019ALU ALUMINUM SENSOR CROSSARM W/MOUNTING HARDWARE	1	EACH	86.25	86.25
7	LI200X-L	US	LI200X-L LI-COR PYRANOMETER (FIXED CALIBRATION)	1	EACH	333.50	333.50
7	9661	US	CABLE 22 AWG 1 TWISTED PAIR SANTOPRENE	11	FEET	0.30	3.30
8	LI2003S	US	LI2003S LI-COR PYRANOMETER BASE & LEVELING FIXTURE	1	EACH	69.00	69.00
9	025STAND	US	025STAND PYRANOMETER CROSSARM STAND	1	EACH	69.00	69.00
10	18008	FI	HMP50-L VAISALA TEMPERATURE/RH PROBE	1	EACH	385.25	385.25
10	18159	US	CABLE 24 AWG 4 CONDUCTOR SHIELDED SANTOPRENE	6	FEET	1.12	6.72
11	4020	US	41303-5A RM YOUNG 6-PLATE GILL SOLAR RADIATION SHIELD	1	EACH	115.00	115.00

AUTHORIZED SIGNATURE

**Country Of Origin

X

WARRANTY POLICY: CSI warrants products manufactured by CSI to be free from defects in materials and workmanship under normal use and service for twelve (12) months from date of shipment unless specified otherwise, subject to the following conditions:
CSI's obligation under this warranty is limited to repairing or replacing (at CSI's option) products which have been returned prepaid to CSI. CSI will return warranted equipment by surface carrier prepaid. This warranty shall not apply to any CSI products which have been subjected to modification, misuse, neglect, accidents of nature, or shipping damage. Batteries are not warranted. Under no circumstances will CSI reimburse the claimant for costs incurred in removing and/or reinstalling equipment. This warranty, and CSI's obligation thereunder, is in lieu of all other warranties of suitability and fitness for a particular purpose. CSI is not liable for consequential damages.

CAMPBELL SCIENTIFIC, INC.

815 W 1800 N · Logan, UT 84321-1784 · USA · (435) 753-2342
FAX (435) 750-9540 · www.campbellsci.com
Fed. I.D. #87-0305157 · DUNS#06-798-0730

*** Please reference our Quote number on your Purchase Order ***

PROFORMA INVOICE **PRICE QUOTATION**

Quote Number: 47727
Quote Date: 31-MAY-05
Page: 2 of 4
Valid Through: 30-JUL-05

USER ADDRESS:
ROGER DENICK
BURGESS & NIPLE
5085 REED RD
COLUMBUS, OH 43220

TEL: (614) 459-2050
FAX: (614) 451-1385

RFQ#	Terms	Freight Terms	Est. Ship Date	CSI Contact
	UPON APPROVAL	PREPAID & ADD	30 DAYS ARO	DAVE MEEK

Line	Item	**CO	Description	Qty Ord	Unit	Selling Price	Ext. Price
12	107-L	US	107-L TEMPERATURE PROBE (-35 TO +50C)	1	EACH	80.50	80.50
12	9661	US	CABLE 22 AWG 1 TWISTED PAIR SANTOPRENE	15	FEET	0.30	4.50
13	TE525MM-L	US	TE525MM-L TEXAS ELECTRONICS RAIN GAGE 0.1MM (0.00394 INCH) TIP W/9.6 INCH ORIFICE	1	EACH	408.25	408.25
13	9661	US	CABLE 22 AWG 1 TWISTED PAIR SANTOPRENE	25	FEET	0.30	7.50
14	CM6	US	CM6 6FT TRIPOD W/GROUNDING KIT	1	EACH	425.50	425.50
15	NOTE		- - ---WATER CONTENT PROFILE PROBES---	1	EACH	0.00	0.00
16	ENVIROSMART	US	ENVIROSMART SENTEK PROBE SYSTEM	1	EACH	0.00	0.00
16	SEN22212	AU	ENVIROSMART SENTEK 22212 SDI-12 INTERFACE	1	EACH	431.25	431.25
16	SEN01012	AU	ENVIROSMART SENTEK 01012 1M PROBE COMPLETE W/O INTERFACE	1	EACH	172.50	172.50
16	SEN03010	AU	ENVIROSMART SENTEK 03010 CLICK-ON WATER CONTENT SENSOR, COMPLETE	3	EACH	230.00	690.00
16	SEN80040	AU	ENVIROSMART SENTEK 80040 CUTTING EDGE YELLOW	1	EACH	11.79	11.79
16	SEN22455	AU	ENVIROSMART SENTEK 22455 PLASTIC EXPANDABLE BUNG	1	EACH	21.85	21.85
16	SENASSEMBLE	US	ENVIROSMART CSI ASSEMBLES & TESTS SENSORS ON PROBE AT USER SPECIFIED DEPTHS	1	EACH	115.00	115.00
17	SENSDI12CBL-L	US	SENSDI12CBL-L DATALOGGER TO SENTEK SDI-12 INTERFACE CABLE	1	EACH	23.00	23.00
17	2206	US	CABLE 22 AWG 3 CONDUCTOR SHIELDED PVC	200	FEET	0.36	72.00

AUTHORIZED SIGNATURE

**Country Of Origin

X

WARRANTY POLICY: CSI warrants products manufactured by CSI to be free from defects in materials and workmanship under normal use and service for twelve (12) months from date of shipment unless specified otherwise, subject to the following conditions:
CSI's obligation under this warranty is limited to repairing or replacing (at CSI's option) products which have been returned prepaid to CSI. CSI will return warranted equipment by surface carrier prepaid. This warranty shall not apply to any CSI products which have been subjected to modification, misuse, neglect, accidents of nature, or shipping damage. Batteries are not warranted. Under no circumstances will CSI reimburse the claimant for costs incurred in removing and/or reinstalling equipment. This warranty, and CSI's obligation thereunder, is in lieu of all other warranties of suitability and fitness for a particular purpose. CSI is not liable for consequential damages.

CAMPBELL SCIENTIFIC, INC.

815 W 1800 N · Logan, UT 84321-1784 · USA · (435) 753-2342
FAX (435) 750-9540 · www.campbellsci.com
Fed. I.D. #87-0305157 · DUNS#06-798-0730

*** Please reference our Quote number on your Purchase Order ***

PROFORMA INVOICE **PRICE QUOTATION**

Quote Number: 47727
Quote Date: 31-MAY-05
Page: 3 of 4
Valid Through: 30-JUL-05

USER ADDRESS:

ROGER DENICK
BURGESS & NIPLE
5085 REED RD
COLUMBUS, OH 43220

TEL: (614) 459-2050
FAX: (614) 451-1385

RFQ#	Terms	Freight Terms	Est. Ship Date	CSI Contact
	UPON APPROVAL	PREPAID & ADD	30 DAYS ARO	DAVE MEEK

Line	Item	**CO	Description	Qty Ord	Unit	Selling Price	Ext. Price
18	NOTE		- - - - ACCESS TUBES ONLY --	1	EACH	0.00	0.00
19	SEN21010	AU	ENVIROSMART REPLACEMENT SENTEK 21010 1.5M ACCESS TUBE ONLY	3	EACH	25.30	75.90
20	SEN22400	AU	ENVIROSMART REPLACEMENT SENTEK 22400 TOP CAP ASSEMBLY COMPLETE	3	EACH	19.55	58.65
21	SEN22455	AU	ENVIROSMART SENTEK 22455 PLASTIC EXPANDABLE BUNG	3	EACH	21.85	65.55
22	NOTE		- - - --ENVIROSMART ACCESSORIES--	1	EACH	0.00	0.00
23	SEN80127	AU	SENTEK 80127 FAIR RITE BEAD	1	EACH	14.49	14.49
24	SEN80125	AU	SENTEK 80125 SILICA GEL BAG 25G (QTY 10)	1	EACH	39.10	39.10
25	NOTE		- - - -- ENVIROSMART INSTALLATION TOOLS --	1	EACH	0.00	0.00
26	SEN70060	AU	ENVIROSMART SENTEK 70060 NORMALIZATION CONTAINER	1	EACH	180.55	180.55
27	SEN06021	AU	SENTEK 06021 PROBE PROGRAMMING CABLE, 6FT	1	EACH	138.00	138.00
28	SEN06025	AU	SENTEK 06025 INTELLIGENT PROBE UTILITY SOFTWARE	1	EACH	72.45	72.45
29	NOTE		- - ---DATALOGGER / ENCLOSURE / POWER	1	EACH	0.00	0.00
30	CR1000	US	CR1000 MEASUREMENT & CONTROL MODULE W/CR1000WP	1	EACH	1,552.50	1,552.50
31	CH100	US	CH100 12V CHARGER/REGULATOR	1	EACH	189.75	189.75
32	BP12	TW / CI	BP12 12V SEALED RECHARGEABLE BATTERY, 12AHR	1	EACH	109.25	109.25

AUTHORIZED SIGNATURE

**Country Of Origin

X

WARRANTY POLICY: CSI warrants products manufactured by CSI to be free from defects in materials and workmanship under normal use and service for twelve (12) months from date of shipment unless specified otherwise, subject to the following conditions:
CSI's obligation under this warranty is limited to repairing or replacing (at CSI's option) products which have been returned prepaid to CSI. CSI will return warranted equipment by surface carrier prepaid. This warranty shall not apply to any CSI products which have been subjected to modification, misuse, neglect, accidents of nature, or shipping damage. Batteries are not warranted. Under no circumstances will CSI reimburse the claimant for costs incurred in removing and/or reinstalling equipment. This warranty, and CSI's obligation thereunder, is in lieu of all other warranties of suitability and fitness for a particular purpose. CSI is not liable for consequential damages.

CAMPBELL SCIENTIFIC, INC.

815 W 1800 N · Logan, UT 84321-1784 · USA · (435) 753-2342
FAX (435) 750-9540 · www.campbellsci.com
Fed. I.D. #87-0305157 · DUNS#06-798-0730

* Please reference our Quote number on your Purchase Order *

PROFORMA INVOICE **PRICE QUOTATION**

Quote Number: 47727
Quote Date: 31-MAY-05
Page: 4 of 4
Valid Through: 30-JUL-05

USER ADDRESS:

ROGER DENICK
BURGESS & NIPLE
5085 REED RD
COLUMBUS, OH 43220

TEL: (614) 459-2050
FAX: (614) 451-1385

RFQ#	Terms	Freight Terms	Est. Ship Date	CSI Contact
	UPON APPROVAL	PREPAID & ADD	30 DAYS ARO	DAVE MEEK

Line	Item	**CO	Description	Qty Ord	Unit	Selling Price	Ext. Price
33	MSX10	CN	MSX10 10W SOLAR PANEL, 15FT CABLE	1	EACH	230.00	230.00
34	15875	US	ENC 12/14 WEATHER-RESISTANT ENCLOSURE 12 X 14 INCH	1	EACH	224.25	224.25
34	5961	US	ENC 12/14 OPTION W/1 CONDUIT FOR CABLES	1	EACH	0.00	0.00
34	7839	US	ENCLOSURE MOUNTS SINGLE NOTCH FOR ENC 12/14 FOR USE W/CM6, CM10, OR TOWERS	1	EACH	40.25	40.25
35	NOTE		- - --- PC SUPPORT SOFTWARE & CABLE ---	1	EACH	0.00	0.00
36	RESOURCECD	US	RESOURCECD REFERENCE MATERIAL & STARTER SOFTWARE	1	EACH	0.00	0.00

Subtotal:	$7,106.59
Tax:	$ .00
* TOTAL USD *	$7,106.59

AUTHORIZED SIGNATURE

**Country Of Origin

X

WARRANTY POLICY: CSI warrants products manufactured by CSI to be free from defects in materials and workmanship under normal use and service for twelve (12) months from date of shipment unless specified otherwise, subject to the following conditions
CSI's obligation under this warranty is limited to repairing or replacing (at CSI's option) products which have been returned prepaid to CSI. CSI will return warranted equipment by surface carrier prepaid. This warranty shall not apply to any CSI products which have been subjected to modification, misuse, neglect, accidents of nature, or shipping damage. Batteries are not warranted. Under no circumstances will CSI reimburse the claimant for costs incurred in removing and/or reinstalling equipment. This warranty, and CSI's obligation thereunder, is in lieu of all other warranties of suitability and fitness for a particular purpose. CSI is not liable for consequential damages.

CAMPBELL SCIENTIFIC, INC.

815 W 1800 N · Logan, UT 84321-1784 · USA · (435) 753-2342
FAX (435) 750-9540 · www.campbellsci.com
Fed. ID. #87-0305157 · DUNS#06-798-0730

*** Please reference our Quote number on your Purchase Order ***

PROFORMA INVOICE **PRICE QUOTATION**

Quote Number: 47799
Quote Date: 06-JUN-05
Page: 1 of 5
Valid Through: 05-AUG-05

USER ADDRESS:

ROGER DENICK
BURGESS & NIPLE
5085 REED RD
COLUMBUS, OH 43220

TEL: (614) 459-2050
FAX: (614) 451-1385

RFQ#	Terms	Freight Terms	Est. Ship Date	CSI Contact
	UPON APPROVAL	PREPAID & ADD	45 DAYS ARO	DAVE MEEK

Line	Item	**CO	Description	Qty Ord	Unit	Selling Price	Ext. Price
1	NOTE		- - !!! PRELIMINARY !!!	1	EACH	0.00	0.00
2	NOTE		- - ---WEATHER STATION---	1	EACH	0.00	0.00
3	NOTE		~~- - ---W/ WIRELESS WATER CONTENT PROBES---~~	1	EACH	0.00	0.00
4	NOTE		- - ---WEATHER SENSORS / MOUNTS---	1	EACH	0.00	0.00
5	03001-L	US	03001-L RM YOUNG WIND SENTRY SET	1	EACH	575.00	575.00
5	9661	US	CABLE 22 AWG 1 TWISTED PAIR SANTOPRENE	11	FEET	0.30	3.30
5	9720	US	CABLE 22 AWG 2 TWISTED PAIR SHIELDED SANTOPRENE	11	FEET	0.54	5.94
6	019ALU	US	019ALU ALUMINUM SENSOR CROSSARM W/MOUNTING HARDWARE	1	EACH	86.25	86.25
7	LI200X-L	US	LI200X-L LI-COR PYRANOMETER (FIXED CALIBRATION)	1	EACH	333.50	333.50
7	9661	US	CABLE 22 AWG 1 TWISTED PAIR SANTOPRENE	11	FEET	0.30	3.30
8	LI2003S	US	LI2003S LI-COR PYRANOMETER BASE & LEVELING FIXTURE	1	EACH	69.00	69.00
9	025STAND	US	025STAND PYRANOMETER CROSSARM STAND	1	EACH	69.00	69.00
10	18008	FI	HMP50-L VAISALA TEMPERATURE/RH PROBE	1	EACH	385.25	385.25
10	18159	US	CABLE 24 AWG 4 CONDUCTOR SHIELDED SANTOPRENE	6	FEET	1.12	6.72
11	4020	US	41303-5A RM YOUNG 6-PLATE GILL SOLAR RADIATION SHIELD	1	EACH	115.00	115.00

AUTHORIZED SIGNATURE

**Country Of Origin

X

WARRANTY POLICY: CSI warrants products manufactured by CSI to be free from defects in materials and workmanship under normal use and service for twelve (12) months from date of shipment unless specified otherwise, subject to the following conditions:
CSI's obligation under this warranty is limited to repairing or replacing (at CSI's option) products which have been returned prepaid to CSI. CSI will return warranted equipment by surface carrier prepaid. This warranty shall not apply to any CSI products which have been subjected to modification, misuse, neglect, accidents of nature, or shipping damage. Batteries are not warranted. Under no circumstances will CSI reimburse the claimant for costs incurred in removing and/or reinstalling equipment. This warranty, and CSI's obligation thereunder, is in lieu of all other warranties of suitability and fitness for a particular purpose. CSI is not liable for consequential damages.

CAMPBELL SCIENTIFIC, INC.

815 W 1800 N · Logan, UT 84321-1784 · USA · (435) 753-2342
FAX (435) 750-9540 · www.campbellsci.com
Fed. I.D. #87-0305157 · DUNS#96-798-0730

*** Please reference our Quote number on your Purchase Order ***

PROFORMA INVOICE **PRICE QUOTATION**

Quote Number: 47799
Quote Date: 06-JUN-05
Page: 2 of 5
Valid Through: 05-AUG-05

USER ADDRESS:
ROGER DENICK
BURGESS & NIPLE
5085 REED RD
COLUMBUS, OH 43220

TEL: (614) 459-2050
FAX: (614) 451-1385

RFQ#	Terms	Freight Terms	Est. Ship Date	CSI Contact
	UPON APPROVAL	PREPAID & ADD	45 DAYS ARO	DAVE MEEK

Line	Item	**CO	Description	Qty Ord	Unit	Selling Price	Ext. Price
12	107-L	US	107-L TEMPERATURE PROBE (-35 TO +50C)	1	EACH	80.50	80.50
12	9661	US	CABLE 22 AWG 1 TWISTED PAIR SANTOPRENE	15	FEET	0.30	4.50
13	TE525MM-L	US	TE525MM-L TEXAS ELECTRONICS RAIN GAGE 0.1MM (0.00394 INCH) TIP W/9.6 INCH ORIFICE	1	EACH	408.25	408.25
13	9661	US	CABLE 22 AWG 1 TWISTED PAIR SANTOPRENE	25	FEET	0.30	7.50
14	CM6	US	CM6 6FT TRIPOD W/GROUNDING KIT	1	EACH	425.50	425.50
15	NOTE		----WATER CONTENT PROFILE PROBES---	1	EACH	0.00	0.00
16	15761	US	CR215 DATALOGGER W/2.4GHZ SPREAD SPECTRUM RADIO	1	EACH	701.50	701.50
17	COAX RPSMA-L	US	COAX RPSMA-L ANTENNA CABLE LMR195 W/REVERSE POLARITY SMA & TYPE N MALE CONNECTOR	1	EACH	40.25	40.25
17	14197	—	CABLE COAX LMR195 SHIELDED POLYETHYLENE LOW LOSS (11DB/100FT @ 900MHZ)	10	FEET	0.67	6.70
18	16755	US	ANTENNA 2.4GHZ YAGI ENCLOSED 13DBD TYPE N-F W/MOUNTING HARDWARE	1	EACH	149.50	149.50
19	PS100	US	PS100 12V POWER SUPPLY W/CHARGING REGULATOR & 7AHR SEALED RECHARGEABLE BATTERY	1	EACH	241.50	241.50
20	MSX10	CN	MSX10 10W SOLAR PANEL, 15FT CABLE	1	EACH	230.00	230.00
21	15874	US	ENC 10/12 WEATHER-RESISTANT ENCLOSURE 10 X 12 INCH	1	EACH	207.00	207.00

AUTHORIZED SIGNATURE

**Country Of Origin

X

WARRANTY POLICY: CSI warrants products manufactured by CSI to be free from defects in materials and workmanship under normal use and service for twelve (12) months from date of shipment unless specified otherwise, subject to the following conditions:
CSI's obligation under this warranty is limited to repairing or replacing (at CSI's option) products which have been returned prepaid to CSI. CSI will return warranted equipment by surface carrier prepaid. This warranty shall not apply to any CSI products which have been subjected to modification, misuse, neglect, accidents of nature, or shipping damage. Batteries are not warranted. Under no circumstances will CSI reimburse the claimant for costs incurred in removing and/or reinstalling equipment. This warranty and CSI's obligation thereunder, is in lieu of all other warranties of suitability and fitness for a particular purpose. CSI is not liable for consequential damages.

CAMPBELL SCIENTIFIC, INC.

815 W 1800 N · Logan, UT 84321-1784 · USA · (435) 753-2342
FAX (435) 750-9540 · www.campbellsci.com
Fed. I.D. #87-0305157 · DUNS#06-798-0730

*** Please reference our Quote number on your Purchase Order ***

PROFORMA INVOICE **PRICE QUOTATION**

Quote Number: 47799
Quote Date: 06-JUN-05
Page: 3 of 5
Valid Through: 05-AUG-05

USER ADDRESS:

ROGER DENICK
BURGESS & NIPLE
5085 REED RD
COLUMBUS, OH 43220

TEL: (614) 459-2050
FAX: (614) 451-1385

RFQ#	Terms	Freight Terms	Est. Ship Date	CSI Contact
	UPON APPROVAL	PREPAID & ADD	45 DAYS ARO	DAVE MEEK

Line	Item	**CO	Description	Qty Ord	Unit	Selling Price	Ext. Price
21	5962	US	ENC 10/12 OPTION W/1 CONDUIT FOR CABLES	1	EACH	0.00	0.00
21	7838	US	ENCLOSURE MOUNTS SINGLE NOTCH FOR ENC 10/12 FOR USE W/CM6, CM10, OR TOWERS	1	EACH	40.25	40.25
22	ENVIROSMART	US	ENVIROSMART SENTEK PROBE SYSTEM	1	EACH	0.00	0.00
22	SEN22212	AU	ENVIROSMART SENTEK 22212 SDI-12 INTERFACE	1	EACH	431.25	431.25
22	SEN01012	AU	ENVIROSMART SENTEK 01012 1M PROBE COMPLETE W/O INTERFACE	1	EACH	172.50	172.50
22	SEN03010	AU	ENVIROSMART SENTEK 03010 CLICK-ON WATER CONTENT SENSOR, COMPLETE	3	EACH	230.00	690.00
22	SEN80040	AU	ENVIROSMART SENTEK 80040 CUTTING EDGE YELLOW	1	EACH	11.79	11.79
22	SEN22455	AU	ENVIROSMART SENTEK 22455 PLASTIC EXPANDABLE BUNG	1	EACH	21.85	21.85
22	SENASSEMBLE	US	ENVIROSMART CSI ASSEMBLES & TESTS SENSORS ON PROBE AT USER SPECIFIED DEPTHS	1	EACH	115.00	115.00
23	SENSDI12CBL-L	US	SENSDI12CBL-L DATALOGGER TO SENTEK SDI-12 INTERFACE CABLE	1	EACH	23.00	23.00
23	2206	US	CABLE 22 AWG 3 CONDUCTOR SHIELDED PVC	200	FEET	0.36	72.00
24	NOTE		- - -- ACCESS TUBES ONLY --	1	EACH	0.00	0.00
25	SEN21010	AU	ENVIROSMART REPLACEMENT SENTEK 21010 1.5M ACCESS TUBE ONLY	3	EACH	25.30	75.90
26	SEN22400	AU	ENVIROSMART REPLACEMENT SENTEK 22400 TOP CAP ASSEMBLY COMPLETE	3	EACH	19.55	58.65

AUTHORIZED SIGNATURE

**Country Of Origin

X

WARRANTY POLICY: CSI warrants products manufactured by CSI to be free from defects in materials and workmanship under normal use and service for twelve (12) months from date of shipment unless specified otherwise, subject to the following conditions: CSI's obligation under this warranty is limited to repairing or replacing (at CSI's option) products which have been returned prepaid to CSI. CSI will return warranted equipment by surface carrier prepaid. This warranty shall not apply to any CSI products which have been subjected to modification, misuse, neglect, accidents of nature, or shipping damage. Batteries are not warranted. Under no circumstances will CSI reimburse the claimant for costs incurred in removing and/or reinstalling equipment. This warranty, and CSI's obligation thereunder, is in lieu of all other warranties of suitability and fitness for a particular purpose. CSI is not liable for consequential damages.

CAMPBELL SCIENTIFIC, INC.

815 W 1800 N · Logan, UT 84321-1784 · USA · (435) 753-2342
FAX (435) 750-9540 · www.campbellsci.com
Fed. I.D. #87-0305157 · DUNS#06-798-0730

*** Please reference our Quote number on your Purchase Order ***

PROFORMA INVOICE **PRICE QUOTATION**

Quote Number: 47799
Quote Date: 06-JUN-05

Valid Through: 05-AUG-05

USER ADDRESS:
ROGER DENICK
BURGESS & NIPLE
5085 REED RD
COLUMBUS, OH 43220

TEL: (614) 459-2050
FAX: (614) 451-1385

RFQ#	Terms	Freight Terms	Est. Ship Date	CSI Contact
	UPON APPROVAL	PREPAID & ADD	45 DAYS ARO	DAVE MEEK

Line	Item	**CO	Description	Qty Ord	Unit	Selling Price	Ext. Price
27	SEN22455	AU	ENVIROSMART SENTEK 22455 PLASTIC EXPANDABLE BUNG	3	EACH	21.85	65.55
28	NOTE		- - --ENVIROSMART ACCESSORIES--	1	EACH	0.00	0.00
29	SEN80127	AU	SENTEK 80127 FAIR RITE BEAD	1	EACH	14.49	14.49
30	SEN80125	AU	SENTEK 80125 SILICA GEL BAG 25G (QTY 10)	1	EACH	39.10	39.10
31	NOTE		- - -- ENVIROSMART INSTALLATION TOOLS --	1	EACH	0.00	0.00
32	SEN70060	AU	ENVIROSMART SENTEK 70060 NORMALIZATION CONTAINER	1	EACH	180.55	180.55
33	SEN06021	AU	SENTEK 06021 PROBE PROGRAMMING CABLE, 6FT	1	EACH	138.00	138.00
34	SEN06025	AU	SENTEK 06025 INTELLIGENT PROBE UTILITY SOFTWARE	1	EACH	72.45	72.45
35	NOTE		- -----DATALOGGER / ENCLOSURE / POWER	1	EACH	0.00	0.00
36	CR1000	US	CR1000 MEASUREMENT & CONTROL MODULE W/CR1000WP	1	EACH	1,552.50	1,552.50
37	RF415	US	RF415 2.4GHZ SPREAD SPECTRUM RADIO	1	EACH	488.75	488.75
38	COAX RPSMA-L	US	COAX RPSMA-L ANTENNA CABLE LMR195 W/REVERSE POLARITY SMA & TYPE N MALE CONNECTOR	1	EACH	40.25	40.25
38	14197	--	CABLE COAX LMR195 SHIELDED POLYETHYLENE LOW LOSS (11DB/100FT @ 900MHZ)	10	FEET	0.67	6.70
39	16755	US	ANTENNA 2.4GHZ YAGI ENCLOSED 13DBD TYPE N-F W/MOUNTING HARDWARE	1	EACH	149.50	149.50

AUTHORIZED SIGNATURE

**Country Of Origin

X

WARRANTY POLICY: CSI warrants products manufactured by CSI to be free from defects in materials and workmanship under normal use and service for twelve (12) months from date of shipment unless specified otherwise, subject to the following conditions:
CSI's obligation under this warranty is limited to repairing or replacing (at CSI's option) products which have been returned prepaid to CSI. CSI will return warranted equipment by surface carrier prepaid. This warranty shall not apply to any CSI products which have been subjected to modification, misuse, neglect, accidents of nature, or shipping damage. Batteries are not warranted. Under no circumstances will CSI reimburse the claimant for costs incurred in removing and/or reinstalling equipment. This warranty, and CSI's obligation thereunder, is in lieu of all other warranties of suitability and fitness for a particular purpose. CSI is not liable for consequential damages.

CAMPBELL SCIENTIFIC, INC.

815 W 1800 N · Logan, UT 84321-1784 · USA · (435) 753-2342
FAX (435) 750-9540 · www.campbellsci.com
Fed. I.D. #87-0305157 · DUNS#06-798-0730

*** Please reference our Quote number on your Purchase Order ***

PROFORMA INVOICE **PRICE QUOTATION**

Quote Number: 47799
Quote Date: 06-JUN-05
Page: 5 of 5
Valid Through: 05-AUG-05

USER ADDRESS:

ROGER DENICK
BURGESS & NIPLE
5085 REED RD
COLUMBUS, OH 43220

TEL: (614) 459-2050
FAX: (614) 451-1385

RFQ#	Terms	Freight Terms	Est. Ship Date	CSI Contact
	UPON APPROVAL	PREPAID & ADD	45 DAYS ARO	DAVE MEEK

Line	Item	**CO	Description	Qty Ord	Unit	Selling Price	Ext. Price
40	CH100	US	CH100 12V CHARGER/REGULATOR	1	EACH	189.75	189.75
41	BP12	TW / CI	BP12 12V SEALED RECHARGEABLE BATTERY, 12AHR	1	EACH	109.25	109.25
42	MSX10	CN	MSX10 10W SOLAR PANEL, 15FT CABLE	1	EACH	230.00	230.00
43	15875	US	ENC 12/14 WEATHER-RESISTANT ENCLOSURE 12 X 14 INCH	1	EACH	224.25	224.25
43	5961	US	ENC 12/14 OPTION W/1 CONDUIT FOR CABLES	1	EACH	0.00	0.00
43	7839	US	ENCLOSURE MOUNTS SINGLE NOTCH FOR ENC 12/14 FOR USE W/CM6, CM10, OR TOWERS	1	EACH	40.25	40.25
44	SPECIAL-AE	--	- - WIRELESS SYSTEM PRE-CONFIGURATION/TESTING/DOCUMENTATION	1	EACH	500.00	500.00
45	NOTE		- - --- PC SUPPORT SOFTWARE & CABLE ---	1	EACH	0.00	0.00
46	LOGGERNET	US	LOGGERNET DATALOGGER SUPPORT SOFTWARE	1	EACH	626.75	626.75

Subtotal:	$10,535.24
Tax:	$ .00
* TOTAL USD *	$10,535.24

AUTHORIZED SIGNATURE

**Country Of Origin

X

WARRANTY POLICY: CSI warrants products manufactured by CSI to be free from defects in materials and workmanship under normal use and service for twelve (12) months from date of shipment unless specified otherwise, subject to the following conditions
CSI's obligation under this warranty is limited to repairing or replacing (at CSI's option) products which have been returned prepaid to CSI. CSI will return warranted equipment by surface carrier prepaid. This warranty shall not apply to any CSI products which have been subjected to modification, misuse, neglect, accidents of nature, or shipping damage. Batteries are not warranted. Under no circumstances will CSI reimburse the claimant for costs incurred in removing and/or reinstalling equipment. This warranty and CSI's obligation thereunder, is in lieu of all other warranties of suitability and fitness for a particular purpose. CSI is not liable for consequential damages.

Soil Volumetric Water Content Probes

Models EasyAG® and EnviroSMART™

The EasyAG® and EnviroSMART™ probes are manufactured by Sentek to provide soil water content profiles for irrigation scheduling or other water movement systems. The measurement range is oven dry to saturation. The probes measure soil moisture at multiple depths and are easy to install. Tools offered by Campbell Scientific allow the probes to be installed with minimal soil disturbance.

The EasyAG and EnviroSMART probes can be integrated with a Campbell Scientific datalogger or weather station. Integrating the probes into our data acquisition systems allows the soil moisture data to be telemetered back to a field station or remote computer. Our dataloggers can measure the probes either through the SDI-12 interface or voltage output. Compatible dataloggers include our CR510, CR10(X), CR1000, CR23X, CR5000, and CR9000.

Both the EasyAG and EnviroSMART probes use electrical capacitance to measure soil moisture. A high frequency electrical field created around each sensor extends through the access tube into the soil. Because soil moisture affects the electrical fields, electrical capacitance measurements can be used to determine soil water content.

Specialized tools and techniques enable the EasyAG to be installed in soils ranging from light sand to heavy clay.

Software options for displaying the EasyAG or EnviroSMART data include our LoggerNet Datalogger Support Software or where compatible, Irrimax 5.0, Sentek's dedicated irrigation scheduling software (shown).

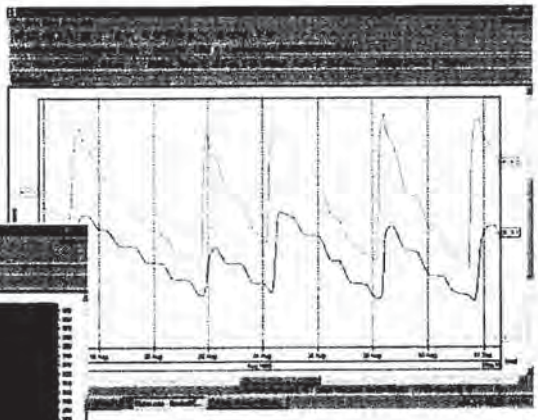

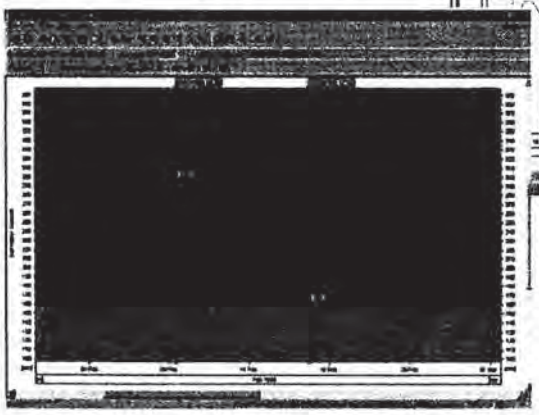

CAMPBELL SCIENTIFIC, INC.
815 W. 1800 N. • Logan, Utah 84321-1784 • (435) 753-2342 • FAX (435) 750-9540 • www.campbellsci.com

EasyAG

EasyAG is used in cultivated soils of good tilth, commonly found in vegetable production areas. The standard EasyAG probe measures water content at depths of 10 cm, 20 cm, 30 cm, and 50 cm. A longer 80 cm version is available that provides water content measurements at depths of 10 cm, 30 cm, 50 cm, and 80 cm. EasyAG is unsuitable for stony soils where the average stone size is greater than 10 mm; EnviroSMART should be used for those applications.

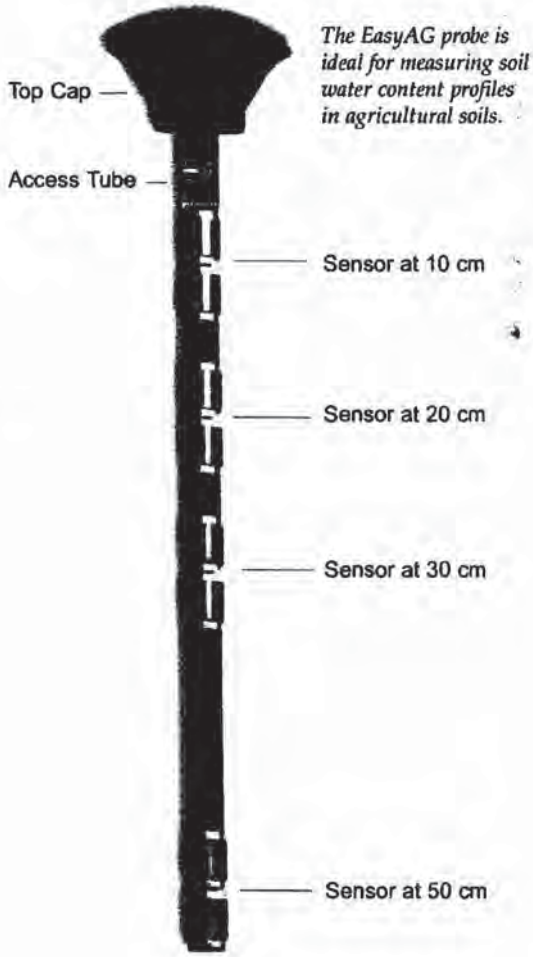

The EasyAG probe is ideal for measuring soil water content profiles in agricultural soils.

EnviroSMART

EnviroSMART is recommended for higher accuracy research measurements, measurements deeper than 80 cm, or stony soils. It is customized for individual applications by adding sensors at user-specified measurement depths. The maximum measurement depth of the standard configuration is 6 feet (2 m); deeper measurements are possible with special provisions.

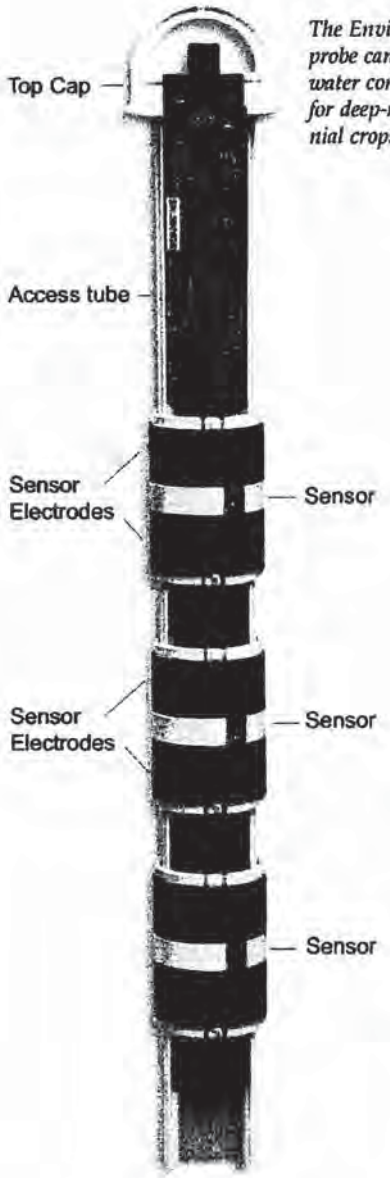

The EnviroSMART probe can provide water content profiles for deep-rooted, perennial crops.

EasyAG Specifications

	SDI-12 Output	Voltage Output
Maximum Cable Length	200 ft (60 m)*	2.0E-09 mV drop/ft cable (differential)** 1.6 mV drop/ft cable (single-ended)**
Maximum Sensors per Standard Probe	4	4
Sensor Measuring Principle	High frequency capacitance	
Output	SDI-12	Analog Voltage
Protocol Options	SDI-12	0 to 5 V (can be user specific)
Interface Measuring Principle	16-bit pulse count	
Output Resolution	16 bit	12 bit
Current Consumption	250 μA @ sleep, 66 mA @ standby, 100 mA @ sampling	0 mA @ sleep, <7 mA @ standby, 100 mA @ sampling
Accuracy when Calibrated	R^2=0.89 based on field calibrations	
Resolution	0.008%	0.025% minimum
Precision	±0.06% Volume	
Measurement Range	Oven dry to saturation	
Temperature Effects	±3%, 5° to 35°C	
Operating Temperature Range	-20° to +75°C	0° to +70°C
Time to Read One Sensor	1.1 seconds	
Sphere of Influence	99% of the reading is taken within a 10 cm radius from the outside of the access tube	
Sensor Diameter	1.04" (2.65 cm)	
Access Tube Diameter	1.26" (3.2 cm)	

**Based on SENVOLTCBL-L cable with the interface drawing 100 mA of current.
*Based on SENSDI12CBL-L cable.

EnviroSMART Specifications

	SDI-12 Output	Voltage Output
Maximum Cable Length	200 ft (60 m)*	2.0E-09 mV drop/ft cable (differential)** 1.6 mV drop/ft cable (single-ended)**
Maximum Sensors per Standard Probe	16	16
Sensor Measuring Principle	High frequency capacitance	
Output	SDI-12	Analog Voltage
Protocol Options	SDI-12	0 to 5 V (can be user specific)
Interface Measuring Principle	16-bit pulse count	
Output Resolution	16 bit	12 bit
Current Consumption	250 µA @ sleep, 66 mA @ standby, 100 mA @ sampling	0 mA @ sleep, <7 mA @ standby, 100 mA @ sampling
Accuracy when Calibrated	R^2=0.99 based on field calibrations	
Resolution	0.008%	0.025% minimum
Precision	±0.03% Volume	
Measurement Range	Oven dry to saturation	
Temperature Effects	±3%, 5° to 35°C	
Operating Temperature Range	-20° to +75°C	0° to +70°C
Time to Read One Sensor	1.1 seconds	
Sphere of Influence	99% of the reading is taken within a 10 cm radius from the outside of the access tube	
Sensor Diameter	2" (5.05 cm)	
Access Tube Diameter	2.22" (5.65 cm)	

**Based on SENVOLTCBL-L cable with the interface drawing 100 mA of current.
*Based on SENSDI12CBL-L cable.

CAMPBELL SCIENTIFIC, INC.
815 W. 1800 N. • Logan, Utah 84321-1784 • (435) 753-2342 • FAX (435) 750-9540
Offices also located in: Australia • Brazil • Canada • England • France • South Africa • Spain

Copyright © 2003, 2004
Campbell Scientific, Inc.
Printed November 2004

Measurement Device / Wireless Sensors

CR200 Family

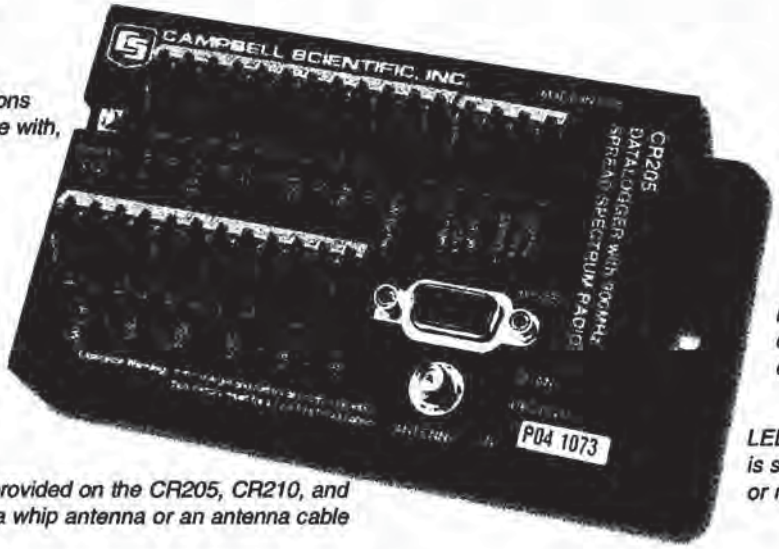

Input/Output Connections measure, communicate with, and power sensors

RS-232 Port supports communications with a computer

LEDs indicate datalogger is scanning, transmitting, or receiving

Antenna connector is provided on the CR205, CR210, and CR215 for connecting a whip antenna or an antenna cable

General Description

The CR200-series dataloggers are small measurement and control devices that measure sensors, process the results, and transmit data via their on-board spread spectrum radio (model dependent). These loggers have an operating temperature range of -40° to +50°C, a 12-bit A/D converter, a battery-backed clock, a 1 Hz scan rate, and a table-based memory structure. They communicate using the PakBus™ protocol, which is a simplified variation of Internet protocols.

Input/Output Channels

The CR200-series loggers have five single-ended analog inputs, one switch closure pulse input, one low level ac pulse input, two control ports, two excitation channels (2.5 or 5 V), and one switched battery output. One of the control ports can be used as an SDI-12 port. Input voltage range is 0 to +2500 mV with 0.6 mV resolution. Differential measurements are not supported.

Enclosures

Applications with minimal power requirements can use the ENC200 enclosure to house the logger and the #16869 sealed rechargeable battery. This 6.7" x 5.5" x 3.7" enclosure has one power connector, one antenna connector, and five compression fittings. A larger enclosure such as our ENC 10/12 or ENC 12/14 is required to house a barometer or a larger battery.

Models/Communications

The models available indicate the communications supported. All of the models support direct communications with a PC.

- **CR200**—supports direct RS-232 communications only.
- **CR205**—includes an on-board 915 MHz Spread Spectrum Radio for transmitting data to another CR205 or a Campbell Scientific RF400 Spread Spectrum Radio. The 915 MHz frequency is used in the US/Canada.
- **CR210**—includes an on-board 922 MHz Spread Spectrum Radio for transmitting data to another CR210 or a Campbell Scientific RF410 Spread Spectrum Radio. The 922 MHz frequency is used in Australia/Israel.
- **CR215**—includes an on-board 2.4 GHz Spread Spectrum Radio for transmitting data to another CR215 or a Campbell Scientific RF415 Spread Spectrum Radio. The 2.4 GHz frequency can be used in many countries worldwide.

Program/Data Storage

Programs and data are stored in a non-volatile Flash memory. Approximately 32,000 data points can be stored in the table-based memory structure.

CAMPBELL SCIENTIFIC, INC.
815 W. 1800 N. • Logan, Utah 84321-1784 • (435) 753-2342 • FAX (435) 750-9540 • www.campbellsci.com

CR205/RF400-based Wireless Sensor Networks

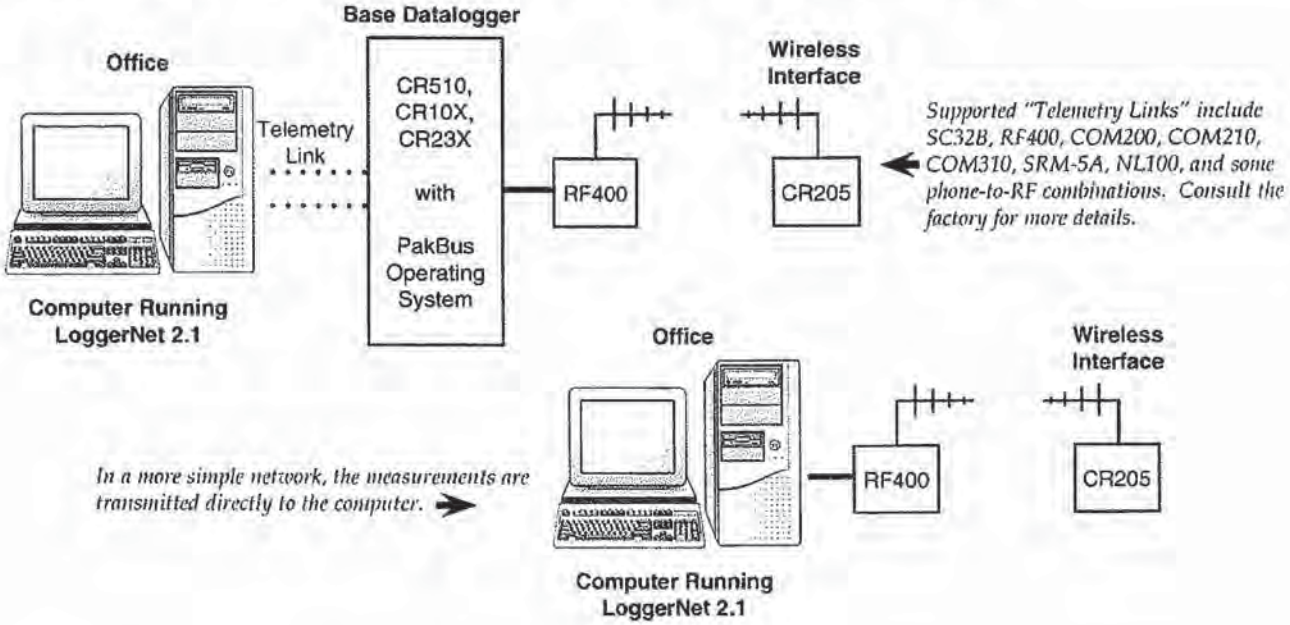

Program Development Tools

The programming language of the CR200-series loggers is CRBasic. Datalogger programs are developed using a program editor (programs cannot be created or edited in the datalogger). Program editors that can be used with these dataloggers include the CRBasic editor and Short Cut. The CRBasic editor is included in our PC400 and LoggerNet Datalogger Support Software. Short Cut can be downloaded, at no charge, from www.campbellsci.com/download.

Communication and Data Collection Tools

PC200W

PC200W, our starter communications software, supports direct communications between a PC and a CR200-series datalogger and provides numeric display of measurements. PC200W can be downloaded, at no charge, from www.campbellsci.com/download.

PC400

PC400 Datalogger Support Software supports programming, manual data collection, and data display. Both direct and spread spectrum communications are supported.

LoggerNet 2.1 or later

Besides providing all of PC400's functions, LoggerNet Datalogger Support Software supports automatic data collection and PakBus® routing.

Power Supply

Sealed rechargeable battery options include the #17365 12 V, 7 Ahr battery and the #16869 12 V, 0.8 Ahr battery. These batteries should be recharged either with a solar panel or ac power. Campbell Scientific offers 1.6 W (SP1.6-L, SP1.6) and 5 W (SP5-L, SP5,) solar panels. The SP1.6-L and SP5-L solar panels connect directly to the datalogger's terminal strip, and the SP1.6 and SP5 plug into the ENC200's power connector. Recharging the battery via ac power requires either the #15988 or #16876 wall charger. The #15988 charger connects directly to the logger's terminal strip, and the #16876 charger plugs into the ENC200's power connector.

Wireless Sensor Networks

The CR205, CR210, and CR215 can be used in a wireless sensor network. Wireless sensor networks are appealing because they are often more economical than trenching, laying conduit, and pulling wire. In some applications, cabled sensors are impractical due to man-made or natural causes, including construction, lightning, moving platforms, agricultural production, or bodies of water.

The diagrams at the top of the page depict our CR205/RF400-based wireless sensor networks. Our CR210/RF410-based and CR215/RF415-based networks are similar. All wireless sensor networks require LoggerNet 2.1 or higher software. Base dataloggers (CR510, CR10X, or CR23X) must have a PakBus operating system installed, which is available from www.campbellsci.com/upgrades.html.

Antenna Options

CR205 and CR210 Antennas

- 0 dBd, omni-directional, ½ wave, whip, right angle
- 1 dBd Dipole, includes adhesive window/wall mount and 10 ft cable
- 3 dBd, omni-directional (requires antenna cable)
- 9 dBd, Yagi (requires antenna cable)

CR215 Antennas

- 0 dBd, omni-directional, ½ wave, whip
- 13 dBd, Yagi (requires antenna cable)

Antenna Cables

- COAX RPSMA is recommended for lengths less than 10 feet
- COAX NTN is recommended for lengths greater than 10 feet (requires a surge protector kit).

Antenna Surge Protector Kits

- 14962 Surge Protector Kit for CR210 and CR205
- 16982 Surge Protector Kit for CR215

Compatible Sensors

The CR200-series loggers can measure a variety of sensors including SDI-12 sensors and 4 to 20 mA sensors. The parameters and sensors in which the CR200-series loggers can measure are listed below:

- **Barometric Pressure**—CS100, CS105, and CS115 barometers
- **Precipitation**—CS700, TE525, TE525WS, TE525MM, and 385 tipping bucket rain gauges
- **Relative Humidity**—CS500 and HMP45C Air Temperature and Relative Humidity probes
- **Snow Depth**—SR50 Ultrasonic Distance Sensor
- **Soil Volumetric Water Content**—CS625 Water Content Reflectometer (developed specifically for the CR200-series dataloggers). *Our CS616 and CS620 sensors are not compatible.*
- **Soil Water Potential**—257 Matric Potential Block. *Our 229 sensor is not compatible.*
- **Temperature**—109 Temperature Probe (developed specifically for the CR200-series dataloggers). *Other temperature probes listed on our US Price List including our 107/108 probes and thermocouples are not compatible.*
- **Water Level**—SR50 Ultrasonic Distance Sensor, SDI-12 encoders, and SDI-12 transducers (CS408, CS445). *Our DB1 Double Bubbler, non-SDI-12 encoders (CS410), and non-SDI-12 transducers (CS400, CS405, CS420, CS425, and CS431) are not compatible.*
- **Water Quality**—109 Temperature Probe and SDI-12 water quality probes. *Our CS547A, CS511, CSIM11, CSIM11-ORP, and OBS-3 probes are not compatible.*
- **Wind Speed and Direction**—014A, 034B, 03101, 03001, 05103, 05106, 05305, and CS800 sensors. *The CSAT3 3-D Sonic Anemometer is not compatible.*

Note: The CR200-series dataloggers cannot make differential measurements and are not compatible with the solar radiation, duff moisture, fuel moisture/temperature, geographic position, leaf wetness, and soil heat flux sensors listed on our price lists. Campbell Scientific's SDM devices and multiplexers are also not supported.

Specifications

Electrical specifications are valid over a -40° to +50°C range unless otherwise specified.

Analog Inputs; Digital I/O

Channels SE1 to SE5 can be individually configured for single-ended measurement or digital I/O.

Single-Ended Measurement (SE1 to SE5)

- Analog input range: $0 \leq V < 2.5$ Vdc
- Measurement resolution: 0.6 mV
- Measurement Accuracy
  - Typical: ±(0.25% of reading + 1.2 mV offset) over -40° to +50°C
  - Worst-case: ±(1% of reading + 2.4 mV offset) over -40° to 50°C

Period Averaging (SE1 to SE4)

- Maximum input voltage: 4 Vdc
- Frequency range: 0 to 150 kHz
- Voltage threshold: counts cycles on transition from <0.9 Vdc to >2.1 Vdc

Digital I/O (SE1 to SE5)

- Input/output high state: 2.1 to 3.3 Vdc
- Input/output low state: <0.9 Vdc
- Output high state: 3.3 V (no load)
- Drive current: 220 µA @ 2.7 Vdc
- Maximum input voltage: 4 Vdc

Half Bridge Measurements

- Accuracy: Relative to the excitation. Using +2.5 Vdc excitation, is ±(0.06% of reading + 2.4 mV)

Excitation Channels: (EX1 and EX2)

- Range: programmable 0, 2.5, 5 Vdc, or off (floating)
- Accuracy: ±25 mV on +2.5 Vdc range, ±125 mV on +5.0 Vdc range
- Maximum current: 25 mA on +2.5 Vdc range, 10 mA on +5.0 Vdc range

Control Ports (C1 and C2)

Digital I/O

- Voltage level when configured as input: <0.9 Vdc (low state) to >2.7 Vdc (high state)
- Voltage level when configured as output: 0 V (low state), 5 Vdc (high state) (no load)
- Logic level: TTL
- Drive current: 1.5 mA @ 4.5 V

SDI-12

- SDI-12 sensors connect to C1

Specifications (continued)

Pulse Counters

Switch Closure (P_SW)

- Maximum count rate: 100 Hz
- Minimum switch open time: 5 ms
- Minimum switch closed time: 5 ms
- Maximum bounce time: 4 ms

Pulse Count (P_SW, C1, and C2)

- Voltage threshold: count on transition from <0.9 V to >2.7 Vdc
- Maximum input frequency: 1 kHz
- Max input voltage: C1 & C2 (6.5 V), P_SW (4 Vdc)

Low Level ac (P_LL)

- Voltage threshold: <0.5 to >2V
- Minimum input: 20 mV RMS
- Maximum frequency: 1 kHz
- Maximum input: ±20 V

Note: P_LL, C1, & C2 can be used for switch closure using the battery voltage and a 20 kOhm pull-up resistor. If the dc offset is >0.5 V, then AC coupling is required.

Communications

- Serial Interface: Female RS-232 9-pin interface for logger-to-PC communications
- Onboard Spread Spectrum Radio
  - 915 MHz (CR205), 922 MHz (CR210), or 2.4 GHz (CR215)
  - 1 mile transmission range with 0 dBd ¼ wave antenna (line-of-sight), 900 MHz radios
  - 0.6 miles (1 km) transmission range with 0 dBd ½ wave antenna (line-of-sight), 2.4 GHz radio
  - Up to 10 mile range with higher gain antenna (line-of-sight)
  - RF4XX used as a base station radio
- Available radio transmission modes:
  - Always on, program controlled
  - Cycle time: 1 or 8 s cycles; on for 100 ms every period; checks for incoming communication
  - Scheduled transmission time: off until transmission time
- PAKBUS® packet switching network protocol

Clock Accuracy

- 8.2 minutes/month @ -40° to +50°C; 1 minute/month @ +25°C

CPU and Storage

- 128 kByte Flash Final Storage; data format is 4 bytes per data point (table-based)
- 6.5 kByte Flash Program Storage
- Fastest scan rate once per second

Switched Battery (SW BATTERY)

- Switched under program control
- 300 mA minimum current available

Power

- Battery voltage range: 7 to 16 Vdc (can program datalogger to measure internal battery voltage)
- Battery: 12 Vdc sealed rechargeable with on-board charging circuit. Alkaline cells, lithium, or other non-rechargeable battery types may be connected if the charging circuit is not used (i.e. nothing connected to charging terminals).
- Charger input voltage: 16 to 22 Vdc
- Shelf life of clock's backup battery: 5 years

Current Drain (@12 V)

- Quiescent current drain: no radio or radio powered off ~0.2 mA
- Active current drain:
  - No radio ~3 mA
  - Radio receive ~20 mA (CR205, CR210), ~36 mA (CR215)
  - Radio transmit ~75 mA (CR205, CR210, CR215)
- Average continuous current drain:
  - Radio always on ~20 mA (CR205, CR210), ~36 mA (CR215)
  - Radio in 1 s duty cycle ~2.2 mA (CR205, CR210), ~4 mA (CR215)
  - Radio in 8 s duty cycle ~0.45 mA (CR205, CR210), ~0.8 mA (CR215)

CE Compliance (as of 03/02)

Standard(s) to which conformity is declared:
EN55022: 1995 and EN61326: 1998

EMI and ESD Protection

Immunity: Meets or exceeds following standards:
ESD: per IEC 1000-4-2; ±8 kV air, ±4 kV contact discharge
RF: per IEC 1000-4-3; 3 V/m, 80-1000 MHz
EFT: per IEC 1000-4-4; 1 kV power, 500 V I/O
Surge: per IEC 1000-4-5; 1 kV power and I/O
Conducted: per IEC 1000-4-6; 3 V 150 kHz-80 MHz
Emissions and immunity performance criteria available on request.

Case

- Aluminum case with spring-loaded terminals
- Dimensions (including terminals): 5.5" x 3" x 2" (14.0 x 17.6 x 5.1 cm)
- Custom case: available for OEM applications; contact Campbell Scientific

Warranty: One year covering parts and labor.

CAMPBELL SCIENTIFIC, INC.
815 W. 1800 N. • Logan, Utah 84321-1784 • (435) 753-2342 • FAX (435) 750-9540
Offices also located in: Australia • Brazil • Canada • England • France • South Africa • Spain

Copyright © 2001, 2005
Campbell Scientific, Inc.
Printed April 2005

Preliminary Quotation

ZENO® Weather Station

A Versatile, Professional Weather Station Designed for Ease of Use and Future Upgrade.

Coastal Environmental Systems, Inc.
820 First Avenue South ♦ Seattle, Washington 98134
www.CoastalEnvironmental.com

Quotation Number: KP – 122b *Rev.Date:* *PRICES GUARANTEED FOR ONE YEAR*

PREPARED FOR:
Roger Denick
Burgess & Niple
5085 Reed Road
Columbus, OH 43220
RDenick@burnip.com

PREPARED BY:
Kelly Paletta, Products Manager
800-488-8291 x170
kpaletta@CoastalEnvironmental.com

TERMS: Net 30 (OAC)
STANDARD DELIVERY: 30 - 60 Days ARO
SHIPPING: Prepaid/Add, FOB Seattle, WA

Part Number	Weather Station Data	Commercial Price	Net Price
S1034	ZENO®-3200 Datalogger - w/Housing and Wiring Panel * 32-bit microcontroller, Motorola 68332, 16MHz, Full floating point arithmetic, 16Kb data storage memory * 14 single-ended analog inputs (7 differential) 18 bit resolution, 1-90 samples per second sofware selectable * 2 single-ended, 12 bit resolution input channels * 8 user configurable digital input channels * 6 general purpose digital input/output channels * 1 tipping bucket rain gauge input * Switched excitation AND switched power outputs * Hardware AND Software watchdog timer and power monitor * Real-time clock, battery-backed * Universal Serial Interface	1,205.56	1,130.99
S1214Z	ZENO®-3200 Full Serial I/O Ports, up to 5 serial ports depending on configuration and FREE Universal Serial Interface - configurable on any port in single or multi-drop mode	236.84	223.88
1288	ZENOSOFT® - Operating system software for ZENO®-3200. Contains menus and parameter setups for sensors, processes and data outputs.	247.37	233.83
S1122Z	CABLE - communications cable for ZENO®-3200 to PC DB9 to DB9, w/adapter, Std.	38.89	36.48
S1036	MEMORY - ZENO®-3200, 1-Mbyte Option of SRAM	178.40	169.06
S1329	MET-EXPERT Firmware: The ZENO - 3200® examines data from each and every sensor to detect common faults and ensure that the sensor is operating within range. If it is not, an alarm message is sent out and logged in the data.	477.89	451.73
S1027ZA	ENCLOSURE - ZENO®-3200, NEMA-4, Fiberglass, for agricultural stations, includes back plate and marine grade feed-throughs for up to 4 sensors	422.22	396.11
S1104Z	SENSOR - Wind Monitor speed, direction, gust, much more...- Prop and vane style	866.67	813.06
S1276Z	SENSOR - Relative humidity and air temperature, +/-3% and +/- 0.4 degrees C accuracy	742.22	696.31
S1081Z	SENSOR - Barometric Pressure, m/n IC 1220A, ±3 mBars	489.47	462.68
S1068Z	SENSOR - Precipitation, Tipping Bucket 6", resolution 0.01 inch	433.68	409.94
S1282	SENSOR - SOIL temperature, embedded thermistor type	75.56	70.88
S9420	**SENSOR - Soil moisture TDR (qty 3 @$619 ea)**	**2,065.00**	**1,857.00**
S1376Z	SENSOR - Present weather sensor, WIVIS optical sensor	8,000.00	7,505.19
S1114Z	SENSOR - Solar Radiation, m/n LI200SZ, Shortwave ± 10%	498.89	468.03
S1026	POWER SUPPLY - ZENO®-3200, Int, 110 VAC 12 VDC with battery backup, includes charger	231.58	218.90
S1138I	SOFTWARE - INTERCEPT® Enhanced	480.00	456.00
S80021	SPECIAL ENGINEERING SERVICES: Configuration and test	450.00	375.00
S1194ZA	TOWER - Heavy duty, 3 meter, for ZENO®-3200, includes mounting hardware for ZENO® and agricultural	510.53	482.58
	Total:	**$17,640.77**	**$16,457.65**

Continued on following page

Denick, Roger

From: Kelly Paletta [kpaletta@coastalenvironmental.com]
Sent: Monday, June 06, 2005 6:28 PM
To: Denick, Roger
Subject: Soil Moisture S9420

Attachments: Denick.kp122.BurgessNiple.doc

Denick.kp122.BurgessNiple.doc

Specs on the soil moisture sensor follow.

I learned that you can have a cable of up to 1,000 ft for this sensor. Let's use ~ $2.00/foot for cable.

Water Content Reflectometer measures the volumetric water content from 0% to saturation. It uses time-domain measurement methods, but a reflectometer (cable tester) such as the TDR100 is not required.

The probe consists of two 30 cm long stainless steel rods connected to the measurement electronics. The probe rods can be inserted from the surface or the probe can be buried at any orientation to the surface.

Features
Measures volumetric water content using time-domain reflectometry methods Designed for long-term unattended water content monitoring Accuracy ±2.5% VWC using standard calibration Resolution better than 0.1% VWC Measurement time is <500 microseconds

Specifications
Accuracy: ±2.5% VWC using standard calibration in measurement range 0% VWC to 50% VWC
Precision: 0.05% VWC
Resolution: 0.1% VWC
Rod Length: 300 mm (11.8")
Rod Diameter: 3.2 mm (0.13")
Rod Spacing: 32 mm (1.3")
Probe Head: 85 mm x 63 mm x 18 mm (3.3" x 2.5" x 0.7")

==========
Kelly Paletta
Products Manager
Coastal Environmental Systems Inc
800-488-8291 X170
kpaletta@coastalenvironmental.com
==========

South Pole Weather Report - Now Available With Your Morning Coffee! To learn more, click here: www.CoastalEnvironmental.com/newtext.html

MOBILE AUTOMATIC WEATHER STATIONS

CAMPBELL SCIENTIFIC, INC.

815 W 1800 N · Logan, UT 84321-1784 · USA · (435) 753-2342
FAX (435) 750-9540 · www.campbellsci.com
Fed. I.D. #87-0305157 · DUNS#06-798-0730

*** Please reference our Quote number on your Purchase Order ***

PROFORMA INVOICE **PRICE QUOTATION**

Quote Number: 47799
Quote Date: 06-JUN-05
Page: 1 of 5
Valid Through: 05-AUG-05

USER ADDRESS:
ROGER DENICK
BURGESS & NIPLE
5085 REED RD
COLUMBUS, OH 43220

TEL: (614) 459-2050
FAX: (614) 451-1385

RFQ#	Terms	Freight Terms	Est. Ship Date	CSI Contact
	UPON APPROVAL	PREPAID & ADD	45 DAYS ARO	DAVE MEEK

Line	Item	**CO	Description	Qty Ord	Unit	Selling Price	Ext. Price
1	NOTE		- - !!! PRELIMINARY !!!	1	EACH	0.00	0.00
2	NOTE		- - ---WEATHER STATION---	1	EACH	0.00	0.00
3	NOTE		- - ---W/ WIRELESS WATER CONTENT PROBES---	1	EACH	0.00	0.00
4	NOTE		- - ---WEATHER SENSORS / MOUNTS---	1	EACH	0.00	0.00
5	03001-L	US	03001-L RM YOUNG WIND SENTRY SET	1	EACH	575.00	575.00
5	9661	US	CABLE 22 AWG 1 TWISTED PAIR SANTOPRENE	11	FEET	0.30	3.30
5	9720	US	CABLE 22 AWG 2 TWISTED PAIR SHIELDED SANTOPRENE	11	FEET	0.54	5.94
6	019ALU	US	019ALU ALUMINUM SENSOR CROSSARM W/MOUNTING HARDWARE	1	EACH	86.25	86.25
7	LI200X-L	US	LI200X-L LI-COR PYRANOMETER (FIXED CALIBRATION)	1	EACH	333.50	333.50
7	9661	US	CABLE 22 AWG 1 TWISTED PAIR SANTOPRENE	11	FEET	0.30	3.30
8	LI2003S	US	LI2003S LI-COR PYRANOMETER BASE & LEVELING FIXTURE	1	EACH	69.00	69.00
9	025STAND	US	025STAND PYRANOMETER CROSSARM STAND	1	EACH	69.00	69.00
10	18008	FI	HMP50-L VAISALA TEMPERATURE/RH PROBE	1	EACH	385.25	385.25
10	18159	US	CABLE 24 AWG 4 CONDUCTOR SHIELDED SANTOPRENE	6	FEET	1.12	6.72
11	4020	US	41303-5A RM YOUNG 6-PLATE GILL SOLAR RADIATION SHIELD	1	EACH	115.00	115.00

AUTHORIZED SIGNATURE

**Country Of Origin

X

WARRANTY POLICY: CSI warrants products manufactured by CSI to be free from defects in materials and workmanship under normal use and service for twelve (12) months from date of shipment unless specified otherwise, subject to the following conditions:
CSI's obligation under this warranty is limited to repairing or replacing (at CSI's option) products which have been returned prepaid to CSI. CSI will return warranted equipment by surface carrier prepaid. This warranty shall not apply to any CSI products which have been subjected to modification, misuse, neglect, accidents of nature, or shipping damage. Batteries are not warranted. Under no circumstances will CSI reimburse the claimant for costs incurred in removing and/or reinstalling equipment. This warranty and CSI's obligation thereunder is in lieu of all other warranties of suitability and fitness for a particular purpose. CSI is not liable for consequential damages.

CAMPBELL SCIENTIFIC, INC.

815 W 1800 N · Logan, UT 84321-1784 · USA · (435) 753-2342
FAX (435) 750-9540 · www.campbellsci.com
Fed. I.D. #87-0305157 · DUNS#06-798-0730

*** Please reference our Quote number on your Purchase Order ***

PROFORMA INVOICE **PRICE QUOTATION**

Quote Number: 47799
Quote Date: 06-JUN-05

Valid Through: 05-AUG-05

USER ADDRESS:
ROGER DENICK
BURGESS & NIPLE
5085 REED RD
COLUMBUS, OH 43220

TEL: (614) 459-2050
FAX: (614) 451-1385

RFQ#	Terms	Freight Terms	Est. Ship Date	CSI Contact
	UPON APPROVAL	PREPAID & ADD	45 DAYS ARO	DAVE MEEK

Line	Item	**CO	Description	Qty Ord	Unit	Selling Price	Ext. Price
12	107-L	US	107-L TEMPERATURE PROBE (-35 TO +50C)	1	EACH	80.50	80.50
12	9661	US	CABLE 22 AWG 1 TWISTED PAIR SANTOPRENE	15	FEET	0.30	4.50
13	TE525MM-L	US	TE525MM-L TEXAS ELECTRONICS RAIN GAGE 0.1MM (0.00394 INCH) TIP W/9.6 INCH ORIFICE	1	EACH	408.25	408.25
13	9661	US	CABLE 22 AWG 1 TWISTED PAIR SANTOPRENE	25	FEET	0.30	7.50
14	CM6	US	CM6 6FT TRIPOD W/GROUNDING KIT	1	EACH	425.50	425.50
15	NOTE		- - ---WATER CONTENT PROFILE PROBES---	1	EACH	0.00	0.00
16	15761	US	CR215 DATALOGGER W/2.4GHZ SPREAD SPECTRUM RADIO	1	EACH	701.50	701.50
17	COAX RPSMA-L	US	COAX RPSMA-L ANTENNA CABLE LMR195 W/REVERSE POLARITY SMA & TYPE N MALE CONNECTOR	1	EACH	40.25	40.25
17	14197	—	CABLE COAX LMR195 SHIELDED POLYETHYLENE LOW LOSS (11DB/100FT @ 900MHZ)	10	FEET	0.67	6.70
18	16755	US	ANTENNA 2.4GHZ YAGI ENCLOSED 13DBD TYPE N-F W/MOUNTING HARDWARE	1	EACH	149.50	149.50
19	PS100	US	PS100 12V POWER SUPPLY W/CHARGING REGULATOR & 7AHR SEALED RECHARGEABLE BATTERY	1	EACH	241.50	241.50
20	MSX10	CN	MSX10 10W SOLAR PANEL, 15FT CABLE	1	EACH	230.00	230.00
21	15874	US	ENC 10/12 WEATHER-RESISTANT ENCLOSURE 10 X 12 INCH	1	EACH	207.00	207.00

AUTHORIZED SIGNATURE

**Country Of Origin

X

WARRANTY POLICY: CSI warrants products manufactured by CSI to be free from defects in materials and workmanship under normal use and service for twelve (12) months from date of shipment unless specified otherwise, subject to the following conditions:
CSI's obligation under this warranty is limited to repairing or replacing (at CSI's option) products which have been returned prepaid to CSI. CSI will return warranted equipment by surface carrier prepaid. This warranty shall not apply to any CSI products which have been subjected to modification, misuse, neglect, accidents of nature, or shipping damage. Batteries are not warranted. Under no circumstances will CSI reimburse the claimant for costs incurred in removing and/or reinstalling equipment. This warranty, and CSI's obligation thereunder, is in lieu of all other warranties of suitability and fitness for a particular purpose. CSI is not liable for consequential damages.

CAMPBELL SCIENTIFIC, INC.

815 W 1800 N · Logan, UT 84321-1784 · USA · (435) 753-2342
FAX (435) 750-9540 · www.campbellsci.com
Fed. I.D. #87-0305157 · DUNS#06-798-0730

*** Please reference our Quote number on your Purchase Order ***

PROFORMA INVOICE **PRICE QUOTATION**

Quote Number: 47799
Quote Date: 06-JUN-05

Valid Through: 05-AUG-05

USER ADDRESS:
ROGER DENICK
BURGESS & NIPLE
5085 REED RD
COLUMBUS, OH 43220

TEL: (614) 459-2050
FAX: (614) 451-1385

RFQ#	Terms	Freight Terms	Est. Ship Date	CSI Contact
	UPON APPROVAL	PREPAID & ADD	45 DAYS ARO	DAVE MEEK

Line	Item	**CO	Description	Qty Ord	Unit	Selling Price	Ext. Price
21	5962	US	ENC 10/12 OPTION W/1 CONDUIT FOR CABLES	1	EACH	0.00	0.00
21	7838	US	ENCLOSURE MOUNTS SINGLE NOTCH FOR ENC 10/12 FOR USE W/CM6, CM10, OR TOWERS	1	EACH	40.25	40.25
22	ENVIROSMART	US	ENVIROSMART SENTEK PROBE SYSTEM	1	EACH	0.00	0.00
22	SEN22212	AU	ENVIROSMART SENTEK 22212 SDI-12 INTERFACE	1	EACH	431.25	431.25
22	SEN01012	AU	ENVIROSMART SENTEK 01012 1M PROBE COMPLETE W/O INTERFACE	1	EACH	172.50	172.50
22	SEN03010	AU	ENVIROSMART SENTEK 03010 CLICK-ON WATER CONTENT SENSOR, COMPLETE	3	EACH	230.00	690.00
22	SEN80040	AU	ENVIROSMART SENTEK 80040 CUTTING EDGE YELLOW	1	EACH	11.79	11.79
22	SEN22455	AU	ENVIROSMART SENTEK 22455 PLASTIC EXPANDABLE BUNG	1	EACH	21.85	21.85
22	SENASSEMBLE	US	ENVIROSMART CSI ASSEMBLES & TESTS SENSORS ON PROBE AT USER SPECIFIED DEPTHS	1	EACH	115.00	115.00
23	SENSDI12CBL-L	US	SENSDI12CBL-L DATALOGGER TO SENTEK SDI-12 INTERFACE CABLE	1	EACH	23.00	23.00
23	2206	US	CABLE 22 AWG 3 CONDUCTOR SHIELDED PVC	200	FEET	0.36	72.00
24	NOTE		- - -- ACCESS TUBES ONLY ---	1	EACH	0.00	0.00
25	SEN21010	AU	ENVIROSMART REPLACEMENT SENTEK 21010 1.5M ACCESS TUBE ONLY	3	EACH	25.30	75.90
26	SEN22400	AU	ENVIROSMART REPLACEMENT SENTEK 22400 TOP CAP ASSEMBLY COMPLETE	3	EACH	19.55	58.65

AUTHORIZED SIGNATURE

**Country Of Origin

X

WARRANTY POLICY: CSI warrants products manufactured by CSI to be free from defects in materials and workmanship under normal use and service for twelve (12) months from date of shipment unless specified otherwise, subject to the following conditions:
CSI's obligation under this warranty is limited to repairing or replacing (at CSI's option) products which have been returned prepaid to CSI. CSI will return warranted equipment by surface carrier prepaid. This warranty shall not apply to any CSI products which have been subjected to modification, misuse, neglect, accidents of nature, or shipping damage. Batteries are not warranted. Under no circumstances will CSI reimburse the claimant for costs incurred in removing and/or reinstalling equipment. This warranty, and CSI's obligation thereunder, is in lieu of all other warranties of suitability and fitness for a particular purpose. CSI is not liable for consequential damages.

CAMPBELL SCIENTIFIC, INC.

815 W 1800 N · Logan, UT 84321-1784 · USA · (435) 753-2342
FAX (435) 750-9540 · www.campbellsci.com
Fed. I.D. #87-0305157 · DUNS#06-798-0730

*** Please reference our Quote number on your Purchase Order ***

PROFORMA INVOICE **PRICE QUOTATION**

Quote Number: 47799
Quote Date: 06-JUN-05
Page: 4 of 5
Valid Through: 05-AUG-05

USER ADDRESS:
ROGER DENICK
BURGESS & NIPLE
5085 REED RD
COLUMBUS, OH 43220

TEL: (614) 459-2050
FAX: (614) 451-1385

RFQ#	Terms	Freight Terms	Est. Ship Date	CSI Contact
	UPON APPROVAL	PREPAID & ADD	45 DAYS ARO	DAVE MEEK

Line	Item	**CO	Description	Qty Ord	Unit	Selling Price	Ext. Price
27	SEN22455	AU	ENVIROSMART SENTEK 22455 PLASTIC EXPANDABLE BUNG	3	EACH	21.85	65.55
28	NOTE		- - - --ENVIROSMART ACCESSORIES--	1	EACH	0.00	0.00
29	SEN80127	AU	SENTEK 80127 FAIR RITE BEAD	1	EACH	14.49	14.49
30	SEN80125	AU	SENTEK 80125 SILICA GEL BAG 25G (QTY 10)	1	EACH	39.10	39.10
31	NOTE		- - - -- ENVIROSMART INSTALLATION TOOLS --	1	EACH	0.00	0.00
32	SEN70060	AU	ENVIROSMART SENTEK 70060 NORMALIZATION CONTAINER	1	EACH	180.55	180.55
33	SEN06021	AU	SENTEK 06021 PROBE PROGRAMMING CABLE, 6FT	1	EACH	138.00	138.00
34	SEN06025	AU	SENTEK 06025 INTELLIGENT PROBE UTILITY SOFTWARE	1	EACH	72.45	72.45
35	NOTE		- - - ---DATALOGGER / ENCLOSURE / POWER	1	EACH	0.00	0.00
36	CR1000	US	CR1000 MEASUREMENT & CONTROL MODULE W/CR1000WP	1	EACH	1,552.50	1,552.50
37	RF415	US	RF415 2.4GHZ SPREAD SPECTRUM RADIO	1	EACH	488.75	488.75
38	COAX RPSMA-L	US	COAX RPSMA-L ANTENNA CABLE LMR195 W/REVERSE POLARITY SMA & TYPE N MALE CONNECTOR	1	EACH	40.25	40.25
38	14197	--	CABLE COAX LMR195 SHIELDED POLYETHYLENE LOW LOSS (11DB/100FT @ 900MHZ)	10	FEET	0.67	6.70
39	16755	US	ANTENNA 2.4GHZ YAGI ENCLOSED 13DBD TYPE N-F W/MOUNTING HARDWARE	1	EACH	149.50	149.50

AUTHORIZED SIGNATURE

**Country Of Origin

X

WARRANTY POLICY: CSI warrants products manufactured by CSI to be free from defects in materials and workmanship under normal use and service for twelve (12) months from date of shipment unless specified otherwise, subject to the following conditions:
CSI's obligation under this warranty is limited to repairing or replacing (at CSI's option) products which have been returned prepaid to CSI. CSI will return warranted equipment by surface carrier prepaid. This warranty shall not apply to any CSI products which have been subjected to modification, misuse, neglect, accidents of nature, or shipping damage. Batteries are not warranted. Under no circumstances will CSI reimburse the claimant for costs incurred in removing and/or reinstalling equipment. This warranty and CSI's obligation thereunder, is in lieu of all other warranties of suitability and fitness for a particular purpose. CSI is not liable for consequential damages.

CAMPBELL SCIENTIFIC, INC.

815 W 1800 N · Logan, UT 84321-1784 · USA · (435) 753-2342
FAX (435) 750-9540 · www.campbellsci.com
Fed. I.D. #87-0305157 · DUNS#06-798-0730

*** Please reference our Quote number on your Purchase Order ***

PROFORMA INVOICE **PRICE QUOTATION**

Quote Number: 47799
Quote Date: 06-JUN-05
Page: 5 of 5
Valid Through: 05-AUG-05

USER ADDRESS:
ROGER DENICK
BURGESS & NIPLE
5085 REED RD
COLUMBUS, OH 43220

TEL: (614) 459-2050
FAX: (614) 451-1385

RFQ#	Terms	Freight Terms	Est. Ship Date	CSI Contact
	UPON APPROVAL	PREPAID & ADD	45 DAYS ARO	DAVE MEEK

Line	Item	**CO	Description	Qty Ord	Unit	Selling Price	Ext. Price
40	CH100	US	CH100 12V CHARGER/REGULATOR	1	EACH	189.75	189.75
41	BP12	TW / CN	BP12 12V SEALED RECHARGEABLE BATTERY, 12AHR	1	EACH	109.25	109.25
42	MSX10	CN	MSX10 10W SOLAR PANEL, 15FT CABLE	1	EACH	230.00	230.00
43	15875	US	ENC 12/14 WEATHER-RESISTANT ENCLOSURE 12 X 14 INCH	1	EACH	224.25	224.25
43	5961	US	ENC 12/14 OPTION W/1 CONDUIT FOR CABLES	1	EACH	0.00	0.00
43	7839	US	ENCLOSURE MOUNTS SINGLE NOTCH FOR ENC 12/14 FOR USE W/CM6, CM10, OR TOWERS	1	EACH	40.25	40.25
44	SPECIAL-AE	--	- - WIRELESS SYSTEM PRE-CONFIGURATION/TESTING/DOCUMENTATION	1	EACH	500.00	500.00
45	NOTE		- - --- PC SUPPORT SOFTWARE & CABLE ---	1	EACH	0.00	0.00
46	LOGGERNET	US	LOGGERNET DATALOGGER SUPPORT SOFTWARE	1	EACH	626.75	626.75

Subtotal:	$10,535.24
Tax:	$ .00
* TOTAL USD *	$10,535.24

AUTHORIZED SIGNATURE

**Country Of Origin

X

WARRANTY POLICY: CSI warrants products manufactured by CSI to be free from defects in materials and workmanship under normal use and service for twelve (12) months from date of shipment unless specified otherwise, subject to the following conditions: CSI's obligation under this warranty is limited to repairing or replacing (at CSI's option) products which have been returned prepaid to CSI. CSI will return warranted equipment by surface carrier prepaid. This warranty shall not apply to any CSI products which have been subjected to modification, misuse, neglect, accidents of nature, or shipping damage. Batteries are not warranted. Under no circumstances will CSI reimburse the claimant for costs incurred in removing and/or reinstalling equipment. This warranty, and CSI's obligation thereunder, is in lieu of all other warranties of suitability and fitness for a particular purpose. CSI is not liable for consequential damages.

Wind Speed and Direction Sensors

R.M. Young's Wind Sentry, 03001 Anemometer and Vane, 03101 Anemometer

The Wind Sentry Anemometer and Vane accurately measure wind speed and direction. These sensors interface directly with Campbell dataloggers; no signal conditioning is required. Compatible dataloggers include the CR200-series, CR510, CR10(X), CR1000, CR23X, CR7, CR5000, and CR9000X.

The cup anemometer measures wind speed. Rotation of its cup wheel produces an ac sine wave that is directly proportional to wind speed. The frequency of the ac signal is measured by a datalogger pulse count channel, then converted to engineering units (mph, m/s, knots). The Campbell Scientific version uses shielded bearings which lowers the anemometer's threshold.

Wind direction is sensed by a potentiometer. With the precision excitation voltage from the datalogger applied to the potentiometer element, the output signal is an analog voltage that is directly proportional to azimuth of the wind direction.

An ideal application for the Wind Sentry is Wind Profile Studies. For this application, the LLAC4 4-channel Low Level AC Conversion Module can be used to increase the number of Wind Sentrys measured by one datalogger. The LLAC4 allows datalogger control ports to read the anemometer's ac signals instead of using pulse channels. Dataloggers compatible with the LLAC4 are the CR200-series (ac signal ≤ kHz only), CR1000, CR23X and CR5000.

The Wind Sentry can sit atop an aluminum tripod via the CM215.

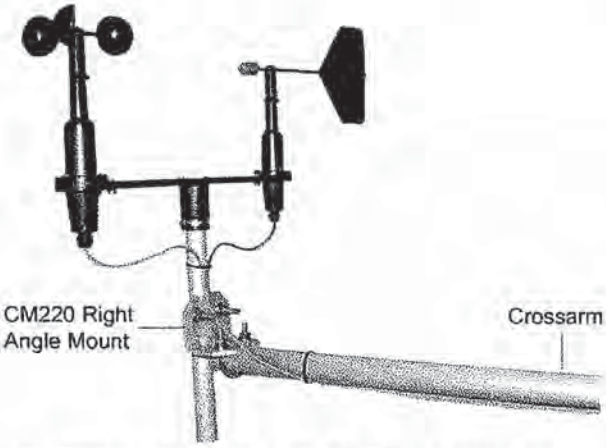

The 03001 is secured to one end of the CM206 Crossarm with the CM220 Right Angle Bracket.

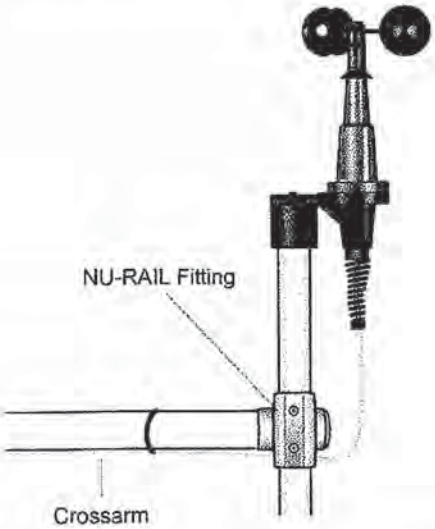

When purchased separately, the Wind Sentry Anemometer is supplied with a galvanized 10" x 3/4" -diameter threaded pipe, which mounts to a crossarm via the 1049 NU-RAIL fitting or CM220 Mount. Alternately it can mount to an aluminum tripod via the CM215.

CAMPBELL SCIENTIFIC, INC.
815 W. 1800 N. • Logan, Utah 84321-1784 • (435) 753-2342 • FAX (435) 750-9540 • www.campbellsci.com

Ordering Information

Wind Sentry Options

03001-L_	Wind Sentry Set; enter wind speed lead length, in feet, after the L, then enter wind direction lead length
03101-L_	Wind Sentry Anemometer; enter lead length, in feet, after the L.

Mounts

1049	¾" x 1" NU-RAIL Fitting for attaching the Wind Sentry to a horizontal crossarm, such as a CM202, CM204, or CM206.
17907	CM220 Right Angle Mounting Bracket for attaching the Wind Sentry to a horizontal crossarm, such as a CM202, CM204, or CM206.
17929	CM215 Sensor Mounting Kit for attaching sensor to the top of a CM110, CM115, or CM120 aluminum tripod.

Wind Speed (Anemometer) Specifications

Range:	0 to 50 m s^{-1} (112 mph), gust survival 60 m s^{-1} (134 mph)
Sensor:	12 cm diameter cup wheel assembly, 40 mm diameter hemispherical cups
Accuracy:	±0.5 m s^{-1} (1.1 mph)
Turning Factor:	75 cm (2.5 ft)
Distance Constant (63% recovery):	2.3 m (7.5 ft)
Threshold:	0.5 m s^{-1} (1.1 mph)
Transducer:	Stationary coil, 1350 ohm nominal resistance
Transducer Output:	AC sine wave signal induced by rotating magnet on cup wheel shaft 100 mV peak-to-peak at 60 rpm; 6 V peak-to-peak at 3600 rpm
Output Frequency:	1 cycle per cup wheel revolution; 0.75 m s^{-1} per Hz
Cup Wheel Diameter:	12 cm (4.7 in)
Weight:	113 g (4 oz)

Wind Direction (Vane) Specifications

Range:	360° mechanical, 355° electrical (5° open)
Sensor:	Balanced vane, 16 cm turning radius
Accuracy:	±5°
Damping Ratio:	0.2
Delay Distance (50% recovery):	0.5 m (1.6 ft)
Threshold	0.8 m s^{-1} (1.8 mph) at 10° displacement 1.8 m s^{-1} (4 mph) at 5° displacement
Transducer:	Precision conductive plastic potentiometer; 10 kohm resistance; 0.5% linearity; life expectancy 20 million revolutions. Rated 1 watt at 40°C, 0 watts at 125°C.
Transducer Output:	Analog dc voltage proportional to wind direction angle with regulated excitation voltage supplied by the datalogger
Vane Length:	22 cm (8.7 in)
Vane Weight:	170 g (6 oz)

Wind Sentry Assembly Specifications

Operating Temperature:	-50° to +50°C assuming non-riming conditions
Overall Height:	32 cm (12.6 in)
Crossarm Length:	40 cm (15.7 in) between instruments (center-to-center)
Mounting Diameter:	26.7 mm (1.05 in), mounts on standard 3/4 in. pipe

CAMPBELL SCIENTIFIC, INC.
815 W. 1800 N. • Logan, Utah 84321-1784 • (435) 753-2342 • FAX (435) 750-9540
Offices also located in: Australia • Brazil • Canada • England • France • South Africa • Spain

Copyright © 1994, 2005
Campbell Scientific, Inc.
Printed June 2005

Solar Radiation Sensors

LI-COR's LI190SB Quantum Sensor & LI200X Silicon Pyranometer

LI190SB and LI200X measure solar radiation with a silicon photovoltaic detector mounted in a cosine-corrected head. A shunt resistor in the sensor's cable converts the signal from microAmps to millivolts, allowing the LI190SB and LI200X to be measured directly by a Campbell Scientific datalogger (CR510, CR10(X), CR1000, CR23X, CR5000, and CR7).

LI190SB Quantum Sensor

LI190SB accurately measures Photosynthetic Photon Flux Density (PPFD) in both natural and artificial light. PPFD is the number of photons in the 400 to 700 nm waveband incident per unit time on a unit surface. Because PPFD describes photosynthetic activity, the LI190SB is ideal for growth chambers and greenhouses.

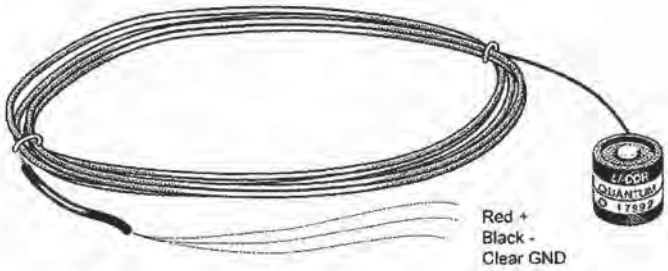

LI190SB Quantum Sensor. The LI200X has a similar appearance and identical wiring.

LI200X Silicon Pyranometer

The LI200X Silicon Pyranometer is calibrated against an Eppley Precision Spectral Pyranometer (PSP) to accurately measure sun plus sky radiation. The LI200X is used extensively in solar, agricultural, meteorological, and hydrological applications. The LI200X should not be used under vegetation or artificial lights because it is calibrated for the daylight spectrum (400 to 1100 nm).

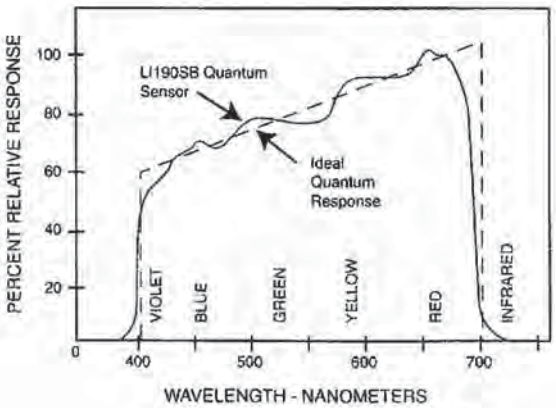

LI190SB Spectral Response

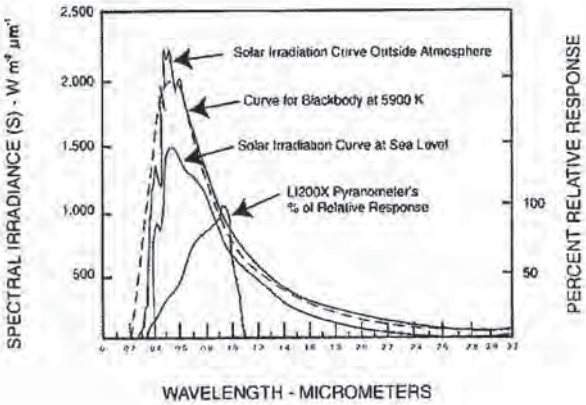

LI200X Spectral Response

CAMPBELL SCIENTIFIC, INC.

815 W. 1800 N. • Logan, Utah 84321-1784 • (435) 753-2342 • FAX (435) 750-8540 • www.campbellsci.com

Sensor Mounts

To ensure accurate measurements, the sensors are leveled with a LI2003S base/ leveling fixture, which incorporates a bubble level and three adjusting screws. The LI2003S mounts to a tripod or tower using the CM225 mount. Alternately the sensor can be attached to a 20' or 30' tower via a UTLI and UT018.

To attach the CM225 to a horizontal crossarm, such as a CM202, CM204, CM206, or 019ALU, place the u-bolt in the holes on the bottom of the bracket.

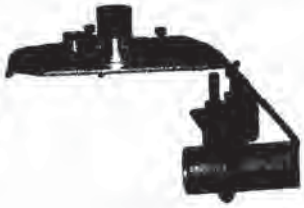

To attach the CM225 to a vertical mast or pole, place the u-bolt in the holes in the side of the bracket.

Ordering Information

LI190SB-L	Quantum Sensor with user specified lead length. Enter the lead length after the L. For example, LI190SB-L11, orders an 11' lead length.
LI200X-L	Silicon Pyranometer with user specified lead length. Enter the lead length after the L. For example, LI200X-L11, orders an 11' lead length.
LI2003S	Base and leveling fixture required to level the sensor.
17906	CM225 Mount for attaching to the LI2003S and sensor to a tripod, tower, or vertical pipe.
UTLI	Leveling Fixture & Crossarm Mount for attaching to the UT018 crossarm.
UT018	Tower Mounting Bracket with 2 ft Crossarm for attaching to a 20' or 30' tower.

Common Specifications

Stability: < ±2% change over a 1 year period
Response Time: 10 µs
Temperature Dependence: 0.15% per °C maximum
Cosine Correction: Cosine corrected up to 80° angle of incidence
Operating Temperature: -40° to +65°C
Relative Humidity: 0 to 100%
Detector: High stability silicon photovoltaic detector (blue enhanced)
Sensor Housing: Weatherproof anodized aluminum case with acrylic diffuser and stainless steel hardware
Size: 0.94" dia x 1.00" H (2.38 x 2.54 cm)
Weight: 1 oz. (28 g)

LI190SB Specifications

Calibration: ±5% traceable to the U.S. National Institute of Standards Technology (NIST)
Sensitivity: Typically 5 µA per 1000 µmoles s^{-1} m^{-2}
Linearity: Maximum deviation of 1% up to 10,000 µmoles s^{-1} m^{-2}
Shunt Resistor: 604 Ω
Light Spectrum Waveband: 400 to 700 nm

LI200X Specifications

Accuracy: Absolute error in natural daylight is ±5% maximum; ±3% typical
Sensitivity: 0.2 kW m^{-2} mV^{-1}
Linearity: Maximum deviation of 1% up to 3000 W m^{-2}
Shunt Resistor: Adjustable, 40.2 to 90.2 Ω, factory set to give the above sensitivity
Light Spectrum Waveband: 400 to 1100 nm

CAMPBELL SCIENTIFIC, INC.
815 W. 1800 N. • Logan, Utah 84321-1784 • (435) 753-2342 • FAX (435) 750-9540
Offices also located in: Australia • Brazil • Canada • England • France • South Africa

Copyright © 1993, 2005
Campbell Scientific, Inc.
Printed June 2005

Temperature Probes

Models 107 and 108

The 107 and 108 are rugged, accurate probes that measure air, soil, and water temperature in a variety of applications. These probes consist of a thermistor encapsulated in an epoxy-filled aluminum housing. The housing protects the thermistor allowing the probes to be buried or submerged. The 107 measures from -35° to +50°C, the 108 from -5° to +95°C.

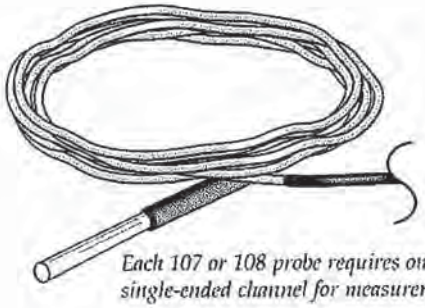

Each 107 or 108 probe requires one single-ended channel for measurement.

Sensor Mounts

When exposed to sunlight, the 107 and 108 probes must be housed in a radiation shield. If the probe is mounted to a CM6/CM10 tripod or a UT10 tower, use a model 41303-5A 6-plate radiation shield. A 41003 10-plate radiation shield and 41322 adapter may also be used when mounted to a tripod or UT10 tower. If the probe is mounted to a UT30 tower, use a UT6P radiation shield and a UT018 Mounting Bracket and Crossarm Mount.

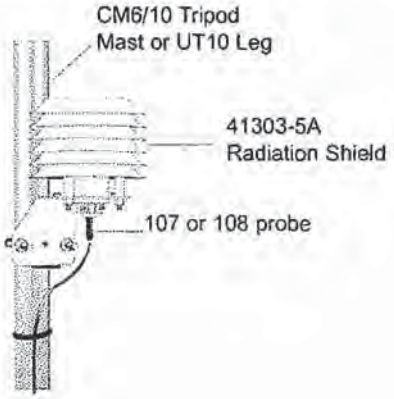

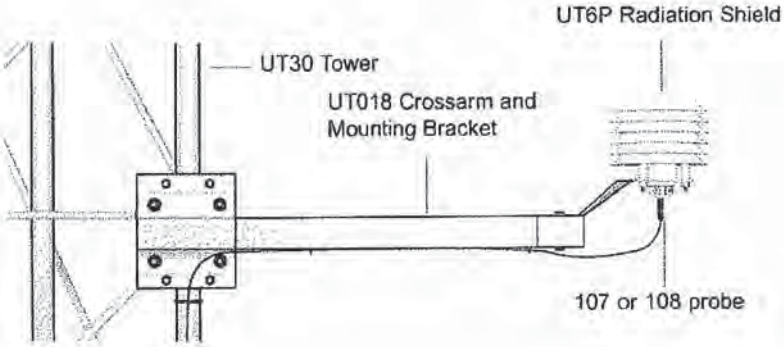

Ordering Information

Probes

107-L	107 Temperature Probe with user-specified lead length; enter the lead length (in feet) after L. Specify a 6' lead length (107-L6) for a 2 m mounting height; specify a 9' lead (107-L9) for 2 m mounting height with UT018 crossarm.
108-L	108 Temperature Probe with user-specified lead length; enter the lead length (in feet) after L. Specify a 6' lead length (108-L6) for a 2 m mounting height; specify a 9' lead (108-L9) for 2 m mounting height with UT018 crossarm.

Radiation Shield

4020	41303-5A 6-Plate Gill Radiation Shield to house a 107 or 108

CAMPBELL SCIENTIFIC, INC.
815 W. 1800 N. • Logan, Utah 84321-1784 • (435) 753-2342 • FAX (435) 750-9540 • www.campbellsci.com

Specifications

Weight:	0.3 lbs
Length:	3.125"
Diameter:	< 0.375"
Sensor:	BetaTherm 100K6A1 Thermistor

107 Probe

Temperature measurement range:	-35° to +50°C
Polynomial linearization accuracy:	Typically <±0.5°C over -38° to +50°C range, <±0.1°C over -24° to +48°C range
Interchangeability error:	Typically <±0.2°C over 0° to 50°C range increasing to ±0.4°C at -40°C
Time constant in air:	Between 30 and 60 seconds in a wind speed of 5 m sec^{-1}

108 Probe

Temperature measurement range:	-5° to +95°C
Polynomial linearization accuracy:	Typically <±0.5°C at the -5° to +90°C range
Interchangeability error:	Typically <±0.2°C over 0° to 70°C range increasing to ±0.3°C at 95°C
Time constant in air:	Between 30 and 60 seconds in a wind speed of 5 m sec^{-1}

Note: The 107B and 108B probes have become obsolete because the 107 and 108 probes can now measure soil and water temperature.

CAMPBELL SCIENTIFIC, INC.
815 W. 1800 N. • Logan, Utah 84321-1784 • (435) 753-2342 • FAX (435) 750-9540
Offices also located in: Australia • Brazil • Canada • England • France • South Africa • Spain

Copyright © 1997, 2005
Campbell Scientific, Inc.
Printed May 2005

Temperature and Relative Humidity Probe
Model HMP50

The HMP50, manufactured by Vaisala, measures air temperature with a 1000 ohm platinum resis-tance thermometer (PRT), and RH with the INTERCAP® capacitive chip. The chip is field-replaceable, as needed, and eliminates the downtime typically required for the recalibration process.

Sensor Mounts

When exposed to sunlight, the HMP50 must be housed in a 6-plate radiation shield, typically the 41303-5A. The 41303-5A radiation shield attaches to a tripod mast or tower leg. Alternately the HMP50 can be housed in the UT6P radiation shield, and then attached to a 20' or 30' tower via the UT018 Crossarm

Ordering Information

HMP50-L	Temperature and RH Probe with user-specified lead length. Enter the lead length, in feet, after the -L. For example, HMP60-L6 orders a 6 ft lead length.
9598	Replacement chip for the HMP50.
4020	41303-5A 6-Plate Gill Radiation Shield
UT6P	6-plate Radiation Shield that attaches to the UT018 Crossarm
UT018	Tower Mounting Bracket with 2 ft Cross-arm for attaching to a 20' or 30' tower.

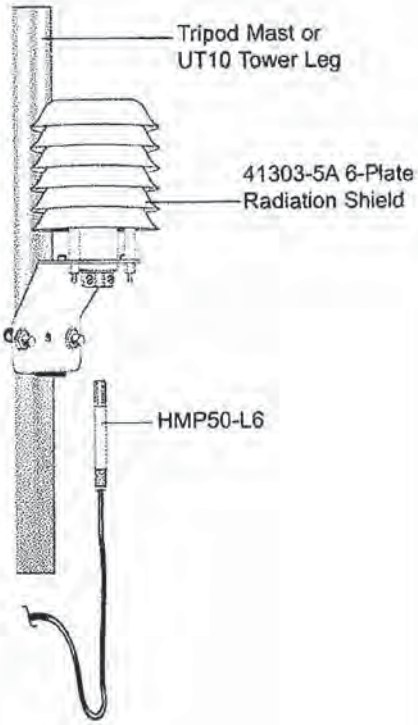

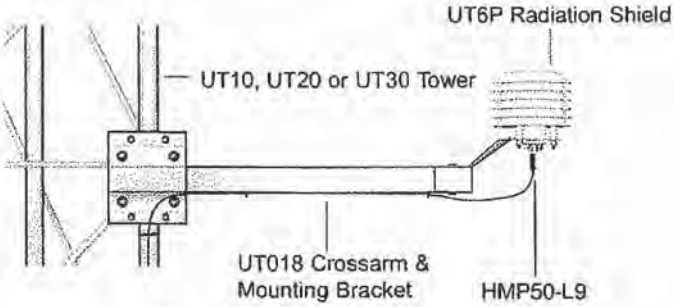

CAMPBELL SCIENTIFIC, INC.
815 W. 1800 N. • Logan, Utah 84321-1784 • (435) 753-2342 • FAX (435) 750-9540 • www.campbellsci.com

Specifications

Relative Humidity

Operating Range: 0 to 98% RH

Accuracy: 0-90% range: ±3.0%
90-98% range: ±5.0%

Temperature Dependence of Relative Humidity Measurement:

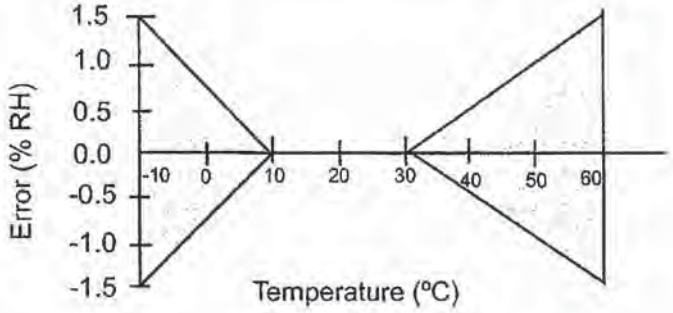

Typical Long-Term Stability: Better than ±1% RH per year

Temperature

Measurement Range: -25° to +60°C

Temperature Accuracy:

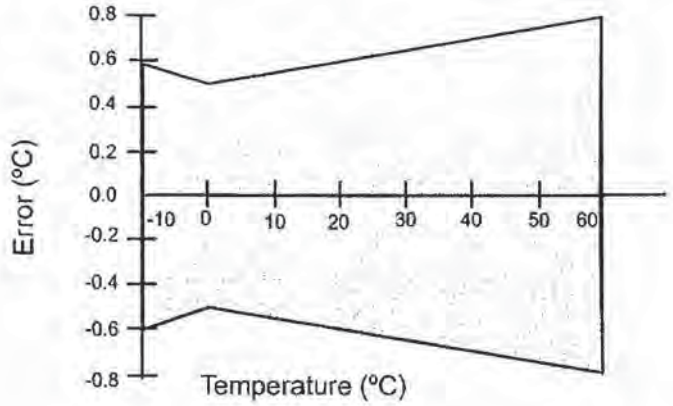

General

Supply Voltage: 7 to 28 Vdc (typically powered by datalogger's 12 V supply)

Current Consumption: 2 mA typical

Diameter: 0.47" (1.2 cm)

Length: 2.8" (7.1 cm)

Housing Material: chrome-coated aluminum and chrome-coated ABS plastic

CAMPBELL SCIENTIFIC, INC.

815 W. 1800 N. • Logan, Utah 84321-1784 • (435) 753-2342 • FAX (435) 750-9540
Offices also located in: Australia • Brazil • Canada • England • France • South Africa • Spain

Copyright © 2005
Campbell Scientific, Inc.
Printed June 2005

Rain Gages

Models TE525WS, TE525, TE525MM

The TE525 series tipping bucket rain gages are manufactured by Texas Electronics. Both the TE525WS and TE525 measure in 0.01 inch increments; the TE525MM measures in 0.1 mm increments. These gages funnel precipitation into a bucket mechanism that tips when filled to a calibrated level. A magnet attached to the tipping mechanism actuates a switch as the bucket tips. The momentary switch closure is counted by the pulse-counting circuitry of Campbell Scientific dataloggers.

The TE525WS and TE525 are compatible with Campbell Scientific's CS705 Snowfall Conversion Adapter which allows you to measure the water content of snow. The TE525 requires a recalibration when the CS705 is added or removed; the TE525WS does not. The TE525MM is not compatible with the CS705. For more information about the CS705, refer to the CS705 product literature.

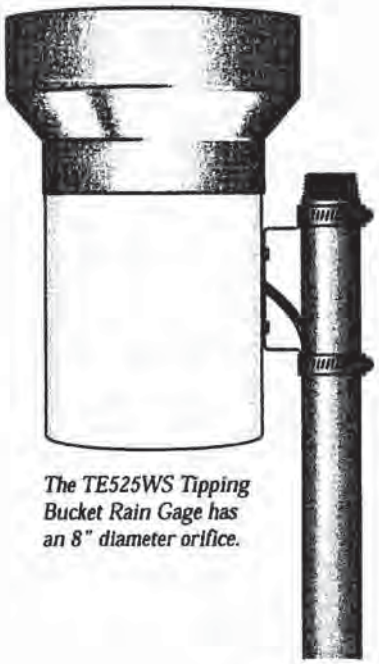

The TE525WS Tipping Bucket Rain Gage has an 8" diameter orifice.

Mounting

The gage mounts to a user-supplied threaded pole. Accurate measurements require the gages to be level.

Ordering Information

TE525WS-L__	8-inch diameter; 0.01 inch tips; user-specified lead length.* Enter lead length (in feet) after L.
TE525-L__	6-inch diameter; 0.01 inch tips; user-specified lead length.* Enter lead length (in feet) after L.
TE525MM-L__	24.5 cm diameter; 0.1 mm tips; user-specified lead length.* Enter lead length (in feet) after L.

To measure frozen precipitation with the TE525WS please consider the CS705 Snowfall Conversion Adapter.

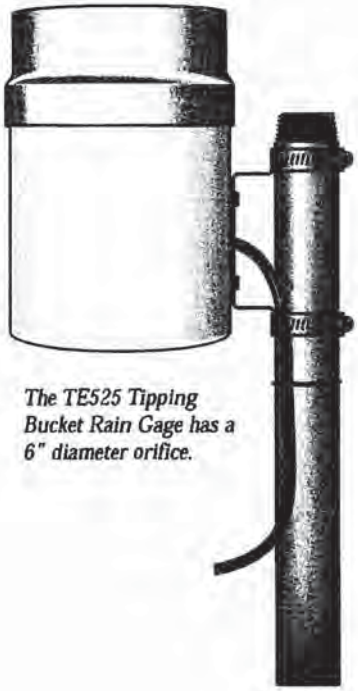

The TE525 Tipping Bucket Rain Gage has a 6" diameter orifice.

**A 25' lead length is recommended for most applications, e.g. TE525WS-L25.*

CAMPBELL SCIENTIFIC, INC.
815 W. 1800 N. • Logan, Utah 84321-1784 • (435) 753-2342 • FAX (435) 750-9540 • www.campbellsci.com

Specifications

Sensor type:	Tipping bucket/magnetic reed switch
Material:	Anodized aluminum
Temperature:	0° to +50°C
Resolution:	1 tip
Cable:	2-conductor shielded cable

	TE525WS	TE525	TE525MM	
Rainfall per tip:	0.01" (0.254 mm)	0.01" (0.254 mm)	0.004" (0.1 mm)	
Orifice diameter:	8" (20.3 cm)	6.06" (15.4 cm)	9.66" (24.5 cm)	
Height:	10.5" (26.7 cm)	9.5" (24.1 cm)	11.5" (29.21 cm)	
Weight:	2.5 lbs. (1.1 kg)	2.5 lbs. (1.1 kg)	2.7 lbs. (1.2 kg)	
Accuracy:				
Up to 1 inch/hr:	±1%	±1%	Up to 10 mm/hr:	±1%
1 to 2 inch/hr:	+0, -2.5%	+0, -3%	10 to 20 mm/hr:	+0, -3%
2 to 3 inch/hr:	+0, -3.5%	+0, -5%	20 to 30 mm/hr:	+0, -5%

CAMPBELL SCIENTIFIC, INC.
815 W. 1800 N. • Logan, Utah 84321-1784 • (435) 753-2342 • FAX (435) 750-9540
Offices also located in: Australia • Brazil • Canada • England • France • South Africa • Spain

Copyright © 1990, 2002
Campbell Scientific, Inc.
Printed March 2002

CR1000 *Measurement and Control System*

A Rugged Instrument with Research-Grade Performance

CAMPBELL SCIENTIFIC, INC.
815 W. 1800 N. • Logan, Utah 84321-1784 • (435) 753-2342 • FAX (435) 750-9540 • www.campbellsci.com

CR1000 Measurement and Control System

The CR1000 provides precision measurement capabilities in a rugged, battery-operated package. It consists of a measurement and control module and a wiring panel.

Features

- 2 Mbytes standard memory; 4 Mbytes optional memory
- Program execution rate of up to 100 Hz
- CS I/O and RS-232 serial ports
- 13-bit analog to digital conversions
- 16-bit H8S Hitachi Microcontroller with 32-bit internal CPU architecture
- Temperature compensated real-time clock
- Background system calibration for accurate measurements over time and temperature changes
- Single DAC used for excitation and measurements to give ratio metric measurements
- Gas Discharge Tube (GDT) protected inputs
- Data values stored in tables with a time stamp and record number
- Battery-backed SRAM memory and clock ensuring data, programs, and accurate time are maintained while the CR1000 is disconnected from its main power source
- Measures intelligent serial sensors without using an SDM-SIO4

Storage Capacity

The CR1000 has 1 Mbyte of FLASH memory for the Operating System. The standard CR1000 provides 2 Mbytes battery-backed SRAM for CPU usage, program storage, and data storage; an optional version provides 4 Mbytes of SRAM. Data is stored in a table format. The storage capacity of the CR1000 can be increased by using a CompactFlash® card.

12-Volt Powered

Any 12 Vdc source can power the CR1000; it typically uses our BPALK or PS100 power supply. The BPALK consists of eight D-cell batteries, and the PS100 includes a sealed rechargeable battery that can be float-charged with a solar panel or ac power.

Datalogger Programming

The onboard, BASIC-like programming language supports data processing and analysis routines. Compatible software includes Short Cut, PC400, and LoggerNet. Short Cut generates straightforward datalogger programs in four steps. PC400 and LoggerNet software support datalogger program creation/editing, data retrieval, and real-time monitoring.

The CR1000's power consumption and packaging are optimized for unattended network applications.

Input Output Terminals

Analog Inputs: Eight differential (16 single-ended) channels measure voltage levels. Resolution on the most sensitive range is 0.67 µV.

Pulse counters: Two pulse channels can count pulses from high level (5 V square wave), switch closure, or low level ac signals.

Switched voltage excitations: Three outputs provide precision excitation voltages for resistive bridge measurements.

Digital I/O ports: Eight ports are provided for frequency measurements, digital control, and triggering. Three of these ports can also be used to measure SDM devices.

Switched 12 Volt: This terminal provides unregulated 12 V that can be switched on and off under program control.

RS-232 port: A PC or laptop can be connected to this 9-pin port via an RS-232 cable.

CS I/O port: Data transfer peripherals that require power from the datalogger can be connected to this port via a cable. This port is also used for connecting the datalogger to a PC via an SC32B interface when optical isolation is required.

Peripheral Port: One 40-pin port interfaces with the CFM100 CompactFlash® module.

Operation in Harsh Environments

The standard operating range is -25° to +50°C; an extended range of -55° to +85°C is available. A CR1000 housed in an environmental enclosure with desiccant is protected from humidity and most contaminants.

Communication Protocols

The CR1000 supports the PakBus® communication protocol. PakBus networks have the distributed routing intelligence to continually evaluate links. Continually evaluating links optimizes delivery times and, in the case of delivery failure, allows automatic switch over to a configured backup route. The CR1000 also supports the Modbus protocol, which allows the CR1000 to work with "off the shelf" Modbus software packages.

Communications

Compatible telecommunication options include Ethernet, phone modems (land-line and cellular), radios, short haul modems, GOES satellite transmitters, and multi-drop modems. Real-time and historical data can be displayed on-site using a Palm OS-based PDA (requires PConnect 3.1), the CR1000KD Keyboard/Display, or a PC. The PC connects to the CR1000 via an RS-232 cable, or if optical isolation is required, via the CS I/O port and SC32B interface.

Customers can transport programs/data to a PC via CompactFlash® cards. The CFM100 module is used to store the programs/data on the card, and a SanDisk® ImageMate® card reader is used to download the programs/data to the PC.

Channel Expansion

Synchronous Devices for Measurement (SDMs)

SDMs are addressable peripherals that expand the CR1000's measurement and control capabilities. For example, SDMs are available to add control ports, analog outputs, pulse count channels, interval timers, or even a CANbus interface to your system. Multiple SDMs, in any combination, can be connected to one CR1000 datalogger.

Multiplexers

Multiplexers increase the number of sensors that can be measured by a CR1000 by sequentially connecting each sensor to the datalogger. Several multiplexers can be controlled by a single CR1000. The CR1000 is compatible with the AM16/32 and AM25T.

Applications

- Eddy covariance systems
- Wireless sensor/datalogger networks
- Mesonet systems
- Wind profiling
- Vehicle testing
- Long-term climatological monitoring, meteorological research, routine weather measurement
- Air quality
- Agriculture, agriculture research
- Soil moisture, Time Domain Reflectometry
- Water level/stage
- Aquaculture
- Water quality
- Avalanche forecasting, snow science, polar, high altitude
- Fire weather
- Geotechnical
- Historic preservation

The CR1000 is compatible with the LLAC4 Low-Level AC Conversion Module. Use of the LLAC4 allows more wind sensors to be measured for wind profiling applications. Wind profiling helps customers determine if a site is a good candidate for harvesting wind.

CR1000 Specifications

Electrical specifications are valid over a -25° to +50°C range unless otherwise specified; non-condensing environment required. To maintain electrical specifications, Campbell Scientific recommends recalibrating dataloggers every two years.

PROGRAM EXECUTION RATE

10 ms to 30 min. @ 10 ms increments

ANALOG INPUTS

8 differential (DF) or 16 single-ended (SE) individually configured. Channel expansion provided by AM16/32 and AM25T multiplexers.

RANGES, RESOLUTION AND TYPICAL INPUT NOISE: Basic resolution (Basic Res) is the A/D resolution of a single conversion. **Resolution of DF measurements with input reversal is half the Basic Res.** Noise values are for DF measurements with input reversal; noise is greater with SE measurements.

Input Range (mV)	*Basic Res (µV)*	*250 µs Int. (µV RMS)*	*50/60 Hz Int. (µV RMS)*
±5000	1330	385	192
±2500	667	192	95.9
±250	66.7	19.2	19.2
±25	6.7	2.3	1.9
±7.5	2	0.62	0.58
±2.5	0.67	0.34	0.19

ACCURACY[1]:
±(0.07% of reading + offset), 0° to 40°C
±(0.14% of reading + offset), -25° to 50°C
±(0.2% of reading + offset), -55° to 85°C (-XT only)

MINIMUM TIME BETWEEN VOLTAGE MEASUREMENTS: Includes the measurement time and conversion to engineering units. For voltage measurements, the CR1000 integrates the input signal for 0.25 ms or a full 16.66 ms or 20 ms line cycle for 50/60 Hz noise rejection. DF measurements with input reversal incorporate two integrations with reversed input polarities to reduce thermal offset and common mode errors and therefore take twice as long.

250 µs Analog Integration:	~1 ms SE
1/60 Hz Analog Integration:	~20 ms SE
1/50 Hz Analog Integration:	~25 ms SE

COMMON MODE RANGE: ±5 V

DC COMMON MODE REJECTION: >100 dB

NORMAL MODE REJECTION: 70 dB @ 60 Hz when using 60 Hz rejection

SUSTAINED INPUT VOLTAGE W/O DAMAGE: ±16 Vdc max.

INPUT CURRENT: ±1 nA typical, ±6 nA max. @ 50°C; ±90 nA @ 85°C

INPUT RESISTANCE: 20 Gohms typical

ACCURACY OF BUILT-IN REFERENCE JUNCTION THERMISTOR (for thermocouple measurements):
±0.3°C, -25° to 50°C
±0.8°C, -55° to 85°C (-XT only)

ANALOG OUTPUTS

3 switched voltage, active only during measurement, one at a time.

RANGE AND RESOLUTION: Voltage outputs programmable between ±2.5 V with 0.67 mV resolution.

ACCURACY: ±(0.07% of setting + 0.8 mV), 0° to 40°C
±(0.14% of setting + 0.8 mV), -25° to 50°C
±(0.2% of setting + 0.8 mV), -55° to 85°C (-XT only)

CURRENT SOURCING/SINKING: ±25 mA

RESISTANCE MEASUREMENTS

MEASUREMENT TYPES: The CR1000 provides ratiometric measurements of 4- and 6-wire full bridges, and 2-, 3-, and 4-wire half bridges. Precise, dual polarity excitation using any of the 3 switched voltage excitations eliminates dc errors.

RATIO ACCURACY[1]: Assuming excitation voltage of at least 1000 mV, not including bridge resistor error.

$$\pm(0.04\% \text{ of reading} + \text{Offset}/V_{ex})$$

Offset values are reduced by a factor of 2 when excitation reversal is used.

PERIOD AVERAGING MEASUREMENTS

The average period for a single cycle is determined by measuring the average duration of a specified number of cycles. The period resolution is 192 ns divided by the specified number of cycles to be measured; the period accuracy is ±(0.01% of reading + resolution). Any of the 16 SE analog inputs can be used for period averaging. Signal limiting are typically required for the SE analog channel.

INPUT FREQUENCY RANGE:

Input Range	*Signal (peak to peak)[2] Min*	*Max*	*Min. Pulse W.*	*Max[3] Freq.*
±2500 mV	500 mV	10 V	2.5 µs	200 kHz
±250 mV	10 mV	2 V	10 µs	50 kHz
±25 mV	5 mV	2 V	62 µs	8 kHz
±2.5 mV	2 mV	2 V	100 µs	5 kHz

PULSE COUNTERS

Two 24-bit inputs selectable for switch closure, high frequency pulse, or low-level ac.

MAXIMUM COUNTS PER SCAN: 16.7×10^6

SWITCH CLOSURE MODE:
Minimum Switch Closed Time: 5 ms
Minimum Switch Open Time: 6 ms
Max. Bounce Time: 1 ms open w/o being counted

HIGH FREQUENCY PULSE MODE:
Maximum Input Frequency: 250 kHz
Maximum Input Voltage: ±20 V
Voltage Thresholds: Count upon transition from below 0.9 V to above 2.2 V after input filter with 1.2 µs time constant.

LOW LEVEL AC MODE: Internal ac coupling removes dc offsets up to ±0.5 V.

Input Hysteresis: 16 mV @ 1 Hz
Maximum ac Input Voltage: ±20 V
Minimum ac Input Voltage:

Sine wave (mV RMS)	*Range (Hz)*
20	1.0 to 20
200	0.5 to 200
2000	0.3 to 10,000
5000	0.3 to 20,000

DIGITAL I/O PORTS

8 ports software selectable, as binary inputs or control outputs. C1-C8 also provide edge timing, subroutine interrupts/wake up, switch closure pulse counting, high frequency pulse counting, asynchronous communications (UART), SDI-12 communications, and SDM communications.

HIGH FREQUENCY MAX: 400 kHz

SWITCH CLOSURE FREQUENCY MAX: 150 Hz

OUTPUT VOLTAGES (no load): high 5.0 V ±0.1 V; low <0.1

OUTPUT RESISTANCE: 330 ohms

INPUT STATE: high 3.8 to 5.3 V; low -0.3 to 1.2 V

INPUT HYSTERISIS: 1.4 V

INPUT RESISTANCE: 100 kohms

SDI-12 INTERFACE SUPPORT

Control ports 1, 3, 5, and 7 may be configured for SDI-12 asynchronous communications. Up to ten SDI-12 sensors are supported per port. It meets SDI-12 Standard version 1.3 for datalogger mode.

CE COMPLIANCE

STANDARD(S) TO WHICH CONFORMITY IS DECLARED: BS EN61326:2002

CPU AND INTERFACE

PROCESSOR: Hitachi H8S 2322 (16-bit CPU with 32-bit internal core)

MEMORY: Battery-backed SRAM; 2 Mbytes, 16 kbytes for program storage; 4 Mbytes optional

SERIAL INTERFACES: COM1 (CS I/O, used to interface with Campbell Scientific peripherals), COM2 (standard RS-232 communication port)

PARALLEL INTERFACE: 40-pin interface for attaching data storage or communication peripherals such as the CFM100 module

BAUD RATES: Selectable from 300 bps to 115.2 kbps. ASCII protocol is one start bit, one stop bit, eight data bits, and no parity.

CLOCK ACCURACY: ±3 min. per year (-30° to 85°C); ±15 min. per year (-55° to 85°C, -XT only)

SYSTEM POWER REQUIREMENTS

VOLTAGE: 9.6 to 16 Vdc

TYPICAL CURRENT DRAIN:
Sleep Mode: ~0.5 mA
1 Hz Sample Rate (one fast SE meas.): ~0.6 mA
100 Hz Sample Rate (one fast SE meas.): ~7.0 mA
100 Hz Sample Rate (one fast SE meas. w/RS-232 communications): <7.0 mA

EXTERNAL BATTERIES: 12 Vdc nominal; reverse polarity protected.

PHYSICAL SPECIFICATIONS

MEASUREMENT & CONTROL MODULE SIZE: 8.5" x 3.9" x 0.85" (21.6 x 9.9 x 2.2 cm)

CR1000WP WIRING PANEL SIZE: 9.4" x 4" x 2.4" (23.9 x 10.2 x 6.1 cm); additional clearance required for serial cable and sensor leads.

WEIGHT: 2.1 lbs (1 kg)

WARRANTY

Three years against defects in materials and workmanship.

---

[1]The sensor and measurement noise are not included and the offsets are the following:

Offset for DF w/input reversal = Basic Res + 1.0 µV
Offset for DF w/o input reversal = 2 Basic Res + 2.0 µV
Offset for SE = 2 Basic Res + 3.0 µV

[2]The signal is centered at the datalogger ground.

[3]The maximum frequency = 1/(Twice Minimum Pulse Width) for 50% of duty cycle signals.

CAMPBELL SCIENTIFIC, INC.
815 W. 1800 N. • Logan, Utah 84321-1784 • (435) 753-2342 • FAX (435) 750-9540
Offices also located in: Australia • Brazil • Canada • England • France • South Africa • Spain

Copyright © 2004, 2005
Campbell Scientific, Inc.
Printed April 2005

Preliminary Quotation **ZENO® Weather Station** A Versatile, Professional Weather Station Designed for Ease of Use and Future Upgrade.	**Coastal Environmental Systems, Inc.** 820 First Avenue South ♦ Seattle, Washington 98134 www.CoastalEnvironmental.com

uotation Number: KP – 122b	*Rev.Date:*	*PRICES GUARANTEED FOR ONE YEAR*
PREPARED FOR: Roger Denick Burgess & Niple 5085 Reed Road Columbus, OH 43220 RDenick@burnip.com	***PREPARED BY:*** Kelly Paletta, Products Manager 800-488-8291 x170 kpaletta@CoastalEnvironmental.com	***TERMS:*** Net 30 (OAC) ***STANDARD DELIVERY:*** 30 - 60 Days ARO ***SHIPPING:*** Prepaid/Add, FOB Seattle, WA

Part Number	Weather Station Data	Commercial Price	Net Price
S1034	ZENO®-3200 Datalogger - w/Housing and Wiring Panel * 32-bit microcontroller, Motorola 68332, 16MHz, Full floating point arithmetic, 16Kb data storage memory * 14 single-ended analog inputs (7 differential) 18 bit resolution, 1-90 samples per second sofware selectable * 2 single-ended, 12 bit resolution input channels * 8 user configurable digital input channels * 6 general purpose digital input/output channels * 1 tipping bucket rain gauge input * Switched excitation AND switched power outputs * Hardware AND Software watchdog timer and power monitor * Real-time clock, battery-backed * Universal Serial Interface	1,205.56	1,130.99
S1214Z	ZENO®-3200 Full Serial I/O Ports, up to 5 serial ports depending on configuration and FREE Universal Serial Interface - configurable on any port in single or multi-drop mode	236.84	223.88
S1288	ZENOSOFT® - Operating system software for ZENO®-3200. Contains menus and parameter setups for sensors, processes and data outputs.	247.37	233.83
S1122Z	CABLE - communications cable for ZENO®-3200 to PC DB9 to DB9, w/adapter, Std.	38.89	36.48
S1036	MEMORY - ZENO®-3200, 1-Mbyte Option of SRAM	178.40	169.06
S1329	MET-EXPERT Firmware: The ZENO - 3200® examines data from each and every sensor to detect common faults and ensure that the sensor is operating within range. If it is not, an alarm message is sent out and logged in the data.	477.89	451.73
S1027ZA	ENCLOSURE - ZENO®-3200, NEMA-4, Fiberglass, for agricultural stations, includes back plate and marine grade feed-throughs for up to 4 sensors	422.22	396.11
S1104Z	SENSOR - Wind Monitor speed, direction, gust, much more...- Prop and vane style	866.67	813.06
S1276Z	SENSOR - Relative humidity and air temperature, +/-3% and +/- 0.4 degrees C accuracy	742.22	696.31
S1081Z	SENSOR - Barometric Pressure, m/n IC 1220A, ±3 mBars	489.47	462.68
S1068Z	SENSOR - Precipitation, Tipping Bucket 6", resolution 0.01 inch	433.68	409.94
S1282	SENSOR - SOIL temperature, embedded thermistor type	75.56	70.88
~~S9420~~	~~SENSOR - Soil moisture TDR - (qty 3 @$619 ea)~~	~~2,055.68~~	~~1,837.00~~
~~S1876Z~~	~~SENSOR - Present weather sensor, WIVIS, optical sensor~~	~~8,000.00~~	~~7,565.19~~
S1114Z	SENSOR - Solar Radiation, m/n LI200SZ, Shortwave ± 10%	498.89	468.03
S1026	POWER SUPPLY - ZENO®-3200, Int, 110 VAC 12 VDC with battery backup, includes charger	231.58	218.90
S1138I	SOFTWARE - INTERCEPT® Enhanced	480.00	456.00
S80021	SPECIAL ENGINEERING SERVICES: Configuration and test	450.00	375.00
S1194ZA	TOWER - Heavy duty, 3 meter, for ZENO®-3200, includes mounting hardware for ZENO® and agricultural	510.53	482.58
	Total:	**$17,640.77**	**$16,457.65**

Continued on following page

Part Number	Selected Options	Commercial Price	Net Price
S1073	ZENO®-3200 Transient Protection, All I/O Lines	342.11	323.38
S9973	SENSOR: Present Weather Laser Drisdometer (Optional substitute for S1376Z listed above)	5,675.00	4,960.00

Please Note - Many factors are used to determine the proper solar panel and battery combination for a given system...geographic location, operating temperatures, radio transmission schemes, sampling rate, etc. The solar panel and battery included in this quote is only an example. We will calculate a "power budget" at a later date. When the design is finalized the system may require a different solar/ battery configuration than the one listed here.

INTERCEPT™ PC Software

Coastal Environmental Systems' INTERCEPT™ software is your window in to the data collected by one or many ZENO® 3200 or WEATHERPAK® systems. INTERCEPT™ can be used for real-time monitoring and long-term analysis of environmental conditions. It can also forward real-time data regarding hazardous or unusual conditions.

INTERCEPT™ Sc
from HazMat WEATHERPA

INTERCEPT™ Will:

- Gather and display the latest data collected by your Data Acquisition Systems.
- Transfer data to other Microsoft Windows™ applications for further display and analysis.
- Check the data for alarm setpoints in real-time, and issue alarm messages accordingly.
- Archive the data to disk.
- Because it is a Windows product - with full, context-sensitive, help facilities - INTERCEPT™ is easy to learn and operate.

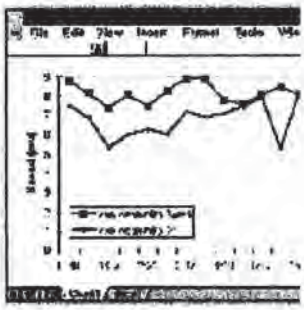

INTERCEPT™ P

INTERCEPT™ Plus maintai
easy-to-use features of INTE
and has a number of add-or
that can be customized for y
needs. Multiple serial ports f
devices (radio, cell phone ar
phone all in the same syster
example). Connection to dat
archival and reports, custom
displays, and auto connectic

Communications and Display Capabilities

INTERCEPT™ receives data in real-time, using a standard or customized ZENO® 3200 or WEATHERPAK® format. The software can also poll your measurement system for missed data, on restart or after interruption. INTERCEPT™ can use a direct line, wireline modem, cellular modem, leased line modem or a radio to interface with your ZENO® 3200 or WEATHERPAK®. If you have more than one measurement system, INTERCEPT™ keeps track of all the individual communications: the software has extensive error checking to ensure that messages sent and received are not compromised. The standard INTERCEPT™ manages two serial ports simultaneously, for example allowing you to communicate with several remote WEATHERPAK®s over a radio system and a local WEATHERPAK® connected over a direct line. An expanded INTERCEPT™, with a capability for up to 8 serial ports, is also available.

The data can be viewed in real-time, in English or Metric units. Wind directions can be displayed in degrees or cardinal points. You can set high or low alarm set points on all measurements - when these alarm setpoints are exceeded, you will receive both an audible and visible message. Built-In-Test (BIT) information, informing the user of any possible sensor failures, can be displayed and logged.

All data received, and notice of significant events (such as a missed poll) are archived to disk. A new file is written each day, beginning and ending at midnight. This historical data is in simple tab-delimited ASCII form, allowing it to be viewed, printed, or exported to other Windows applications. You can carry out further graphical and statistical analysis of the data however you wish. DDE links and other data exchange mechanisms let you update databases and graphical packages in real-time.

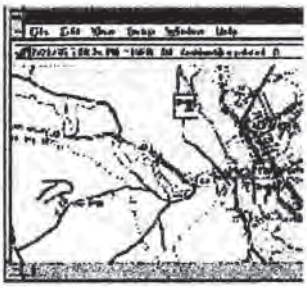

INTERCEPT™ Gra

This INTERCEPT™ is used
for Road Weather Informatic
(RWIS) where data is collec
number of environmental mc
systems with each station lo
represented graphically on a

System Management
On start-up, INTERCEPT™ can poll all your instruments to download data received since the last successful connection was made. This means that no data is lost if, for example, there is a power cut during the night. Archive files are written according to the data measurement time - not the time at which the polling occurred. All alarms, and all system events (such as a missed poll), are archived to disk, and can be easily retrieved in real time. Password protection can be applied to INTERCEPT™, (ruling out the possibility of unauthorized or accidental changes to the setup.

Serial Port Expansion
The 8-port version of INTERCEPT™ allows communication to occur over up to 8 serial ports simultaneously. Since standard PCs do not support 8 serial ports, an expansion card is needed for this option.

INTERCEPT™ Network
The Network version of INTERCEPT™ lets additional PCs on a LAN access the data from one or more WEATHERPAK® or ZENO® 3200 systems in real-time. Up to 8 client copies of INTERCEPT™, running on LAN PCs, can reflect the data received by the server INTERCEPT™. (The server INTERCEPT™ need not run on the network server; however, it must have write access to it). To all intents and purposes, the client copies of INTERCEPT™ appear identical to a standard INTERCEPT™ connected directly to the measuring system.

The server INTERCEPT™ writes its archive files to a separate directory, which can be protected from access by the client copies. This means that data is protected from unauthorized or accidental deletion, while being freely available for read access by other users on the network. The Network version of INTERCEPT™ is available on NT, Windows for Workgroups, and Novell networks.

overlay. This is convenient t
when an alarm is triggered t
icon changes color and a m
on that station will reveal wh
is. A double click will reveal
information about that statio
INTERCEPT™ maintains th
features of INTERCEPT™.

INTERCEPT™ R

INTERCEPT™ RWIS is a c
version of Intercept graphic
has many other data collecti
computational demands that
specific to that application. F
information on our RWIS so
check out this version.

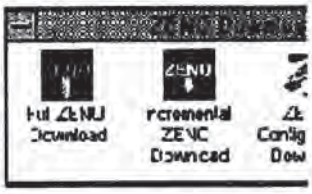

Point & Click Utilities

Want to make field data coll
programming as easy as po
click? Check out our Windo
make your life a whole lot e

Request More Information

(206) 682-6048 / (800) 488-8291
Copyright 2003 Coastal Environmental Systems, Inc. All Rights Reserved.

COASTAL ENVIRONMENTAL SYSTEMS, INC.

Soil Moisture
S1420

• Range from –10°C to +55°C •
• +/- 1.5% or +/- 0.2 dielectric accuracy •
• Rugged & versatile •

The Campbell Dielectric Probe is a versatile, rugged, self-contained sensor for the determination of the dielectric constant of a wide variety of materials. The probe applies a high frequency electric field to a sample, and through appropriate circuitry, accurately determines the dielectric constant. The dielectric constant is used to determine soil moisture.

The basic procedure for sensor installation is to make a hole with a 7/8" diameter rod to the desired sensor depth. With course or gravelly soils, it is sometimes difficult to get a snug fit between the sensor and the soil. With this situation, making an oversized hole and preparing a "grout" of the soil, for securing the sensor in place, may be necessary. (Specific instructions are included with each sensor.)

Once the sensors are installed, there is no further need for maintenance. With permanent crops, such as trees and vines, the sensors may be left in place all winter. With annual crops, where field operations are required, removal of the sensors prior to harvest is a standard practice. If the sensors are removed, simply clean them off and store in a dry place.

Coastal Environmental Systems, Inc. 820 1st Ave South, Seattle, WA 98134
(800) 488-8291 / (206) 682-6048 - fx: (206) 682-5658 www.CoastalEnvironmental.com

TECHNICAL SPECIFICATIONS

Measurement

Dielectric Constant Range:	1 to 65
Dielectric Constant Accuracy:	+/- 1.5% or +/- 0.2 (whichever is greater), typical
Soil Moisture Range:	From completely dry to fully saturated
Soil Moisture Accuracy:	In typical soils, +/- 0.02 water fraction by volume, with soil specific calibration, +/- 0.005
Temperature:	-10°C to +55°C

Environmental

Operating Temperature:	-10°C to +55°C
Storage Temperature:	-40°C to +70°C
Water Resistance:	Tolerates full immersion
Cable:	UV resistant, direct burial
Ruggedness:	Vibration and shock resistant

PHYSICAL

Size:	13 cm x 4 cm x 4 cm (approx)
Weight:	300 g (approx) (not including cable)
Sensing Volume:	Cylindrical region, 6 cm in diameter, 12 cm length (approx)

COASTAL ENVIRONMENTAL SYSTEMS, INC.

Wind Monitor 5103
S1104W • S1104Z • S1104ZR

• Easy Maintenance or Replacement •
• Extremely Rugged •
• Helicoid Propeller •
• 220 mph Survival •

Originally developed for ocean data buoy use, the wind monitor is well suited for a wide variety of wind measuring applications. Simplicity and lightweight corrosion resistant construction were principal design considerations. Slip rings and brushes have been eliminated resulting in improved reliability with lower cost. Extensive use of modern thermoplastic materials improves resistance to corrosion from the sea air environment and from atmospheric pollutants.

The wind speed sensor is an injection molded helicoid shape propeller. The propeller is four blade, 18 cm diameter x 30 cm pitch with a distance constant of 2.7 m (8.9 ft). Wind speed threshold is 1.0 m/s (2.2 mph). Propeller rotation produces an AC sine wave voltage signal with frequency directly proportional to wind speed. The AC voltage signal is induced in a centrally mounted coil by a six pole magnet mounted on the propeller shaft. The coil is located on the non-rotating central portion of the main mounting assembly, eliminating the need for slip rings and brushes.

Vane threshold is 1.0 m/s (2.2 mph) at 10 degrees. Damping ratio is 0.3. Vane position is transmitted to a precision conductive plastic potentiometer which is located in a sealed chamber just below the wind speed transducer coil. The potentiometer requires a regulated excitation voltage with a constant voltage applied to the potentiometer element, the output signal is an analog voltage directly proportional to azimuth angle. All transducer leads terminate in a junction box on the mounting post for convenience in making sensor cable connections. Five conductors are required.

Construction is principally of rigid U.V. stabilized thermoplastic with stainless steel and anodized aluminum fittings. Propeller shaft bearings and vertical shaft bearings are stainless steel precision grade ball bearings.

Coastal Environmental Systems, Inc. 820 1st Ave South, Seattle, WA 98134
(800) 488-8291 / (206) 682-6048 - fx: (206) 682-5658 www.CoastalEnvironmental.com

TECHNICAL SPECIFICATIONS

Propeller

Range:	0 to 60 m/s (117 Kts) (134 mph)
Survival:	100 m/s (194 Kts) (224 mph)
Threshold:	1.0 m/s (2.0 Kts) (2.2 mph)
	0.5 m/s (1.0 Kts) (1.0 mph) - with special bearings
Distance Constant:	2.7 m (8.9 ft)
Signal Output:	sine wave—90 Hz / 8.8 m/s
Resolution:	0.1 m/s (0.2 Kts) (0.2 mph)
Accuracy:	0.3 m/s (0.6 Kts) (0.7 mph)

Vane

Range:	360° mechanical, <355° electrical
Resolution:	1°
Accuracy:	3° (2° optional)
Survival:	100 m/s (194.3 Kts)
Threshold:	1.0 m/s (2.0 Kts)
	0.6 m/s (1.0 Kts) - with special bearings
Delay Distance:	1.3 m (4.3 ft)

PHYSICAL

Height (Overall):	37 cm (14.6 in)
Length (Overall):	55 cm (21.7 in) - includes vane and propeller
Prop Diameter:	18 cm (7.1 in)
Weight:	1.0 kg (2.2 lbs)

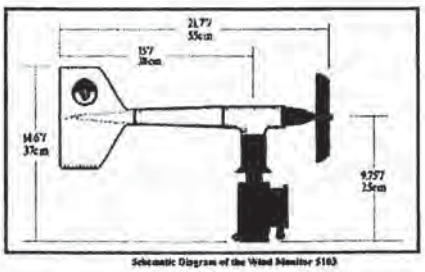

Schematic Diagram of the Wind Monitor S103

Coastal Environmental Systems, Inc. 820 1st Ave South, Seattle, WA 98134
(800) 488-8291 / (206) 682-6048 - fx: (206) 682-5658 www.CoastalEnvironmental.com

COASTAL ENVIRONMENTAL SYSTEMS, INC.

Relative Humidity and Air Temperature
S1276W • S1276Z • S1276ZR

• Very rugged •
• +/- 3% RH accuracy •
• +/- 0.3°C temperature accuracy •

The relative humidity and air temperature sensor is compact and easy to use. The relative humidity element is a hygroscopic capacitive type. It is fully interchangeable. These elements never need calibration. Instead, elements can be easily replaced without the expense and inconvenience sometimes associated with the calibration process. The membrane filter/mechanical housing of the sensor protects it from dust and dirt.

Includes YSI 44034 Thermilinear Bead for air temperature measurement.

Advantages of using a thermistor:

- Sensitivity - A thermistor is much more sensitive to temperature change than the alternative measurement components.
- Interchangeability - There are several reasons for the ability to achieve such tight interchangeability specifications:

- One is the ability to control the manufacturing process precisely.

- Another is the sensitivity of the device itself, which allows for great resolution in the measurements.

Coastal Environmental Systems, Inc. 820 1st Ave South, Seattle, WA 98134
(800) 488-8291 / (206) 682-6048 - fx: (206) 682-5658 www.CoastalEnvironmental.com

TECHNICAL SPECIFICATIONS

RH Accuracy:	+/- 3%
RH Resolution:	1% RH
RH Range:	0 - 100% RH
Operational Temperature Range:	-30°C to +60°C
Storage Temperature:	-80°C to +80°C
AT Accuracy:	+/- 0.1°C, 0°C to +70°C (+/- 0.2°C full range)
Time Constant, Max:	1 second in well-stirred oil 15 seconds in still air
Shield:	Gill multi-plate naturally ventilated shield
Typical Error In Full Sunlight:	0.5°C

COASTAL ENVIRONMENTAL SYSTEMS, INC.

Barometer 1081
S1081W • S1081Z • S1081H

• 1 hPa accuracy •

• Economical •

• High resistance to harsh environments •

The barometer 1081 is an economical, monolithic piezo-resistive pressure sensor with laser-minimal temperature compensation.

The sensor is mounted inside the WEATHERPAK® housing, or in the NEMA enclosure of the ZENO®, on a small circuit board which provides precision current excitation and signal conditioning. A pressure inlet tube extends from the sensor to a protected pressure port, which terminates under the radiation shield.

Coastal Environmental Systems, Inc. 820 1st Ave South, Seattle, WA 98134
(800) 488-8291 / (206) 682-6048 - fx: (206) 682-5658 www.CoastalEnvironmental.com

TECHNICAL SPECIFICATIONS

Measurement	
Range:	500 - 1200 hPa
Resolution:	1 hPa reported
Accuracy:	+/- 1 mBar at 22°C
	+/- 2 mBar from 0°C to +65°C
	+/- 3 mBar from -30°C to +65°C
Electrical	
Input Voltage:	+10 VDC and +5 VDC
Input Current:	3 mA (max)
Output Signal:	0 - 5 VDC after signal conditioning
Connectors:	4 pin header
Environmental	
Operating Temperature:	-40°C to +85°C
Compensated Temperature:	0°C to +50°C
PHYSICAL	
Size:	32 mm (H) x 47 mm (W) x 20 mm (D) including circuit board
Weight:	17 g (0. 6 oz)

COASTAL ENVIRONMENTAL SYSTEMS, INC.

Soil Temperature
S1282W • S1282Z

• Thermistor type •
• High accuracy •
• Good interchangeability •
• Rugged •

How the thermistor is manufactured:

Powder metal oxide mixes are precisely formulated and pressed into densely packed disks. These disks are sintered to achieve the characteristic "slope" of the thermistor. The disks are then metallized to allow for electrical contact. Calibration is accomplished by use of a patented method of material removal to achieve the final interchangeability specification. The thermistor is encapsulated with epoxy or glass to isolate it from the measurement environment. 100% of the thermistors are measured at multiple temperatures to insure that the resistance and slope are within the device's interchangeability specification. Interchangeability thermistors are manufactured under US Patents 2970411 and 3316765, and under various foreign patents.

Advantages of using a thermistor:

- Sensitivity - A thermistor is much more sensitive to temperature change than the alternative measurement components.

- Interchangeability - There are several reasons for wanting to achieve such tight interchangeability specifications:

- One is the ability to control the manufacturing process precisely.

- Another is the sensitivity of the device itself, which allows for great resolution in the measurements.

Coastal Environmental Systems, Inc. 820 1st Ave South, Seattle, WA 98134
(800) 488-8291 / (206) 682-6048 - fx: (206) 682-5658 www.CoastalEnvironmental.com

TECHNICAL SPECIFICATIONS

Range:	-50°C to +50°C
Accuracy:	+/- 0.15°C over full range
Time Constant, Max.:	1 sec. in well-stirred oil, 15 sec. in still air
Cable:	15 ft (standard)

COASTAL ENVIRONMENTAL SYSTEMS, INC.

Pyranometer
S1114W • S1114Z

• Error less than +/- 5% •

• Global solar radiation •

• Durable photodiode •

• Designed for agricultural, meteorological, and hydrological use •

This pyranometer has been used extensively in solar energy studies for site evaluation and monitoring, passive system analysis, irrigation scheduling, and other environmental studies.

The pyranometer features a silicon photovoltaic detector, mounted in a fully cosine-corrected miniature head. The pyranometer may be hand-held or mounted at any required angle, provided that reflected radiation is not a significant portion of the total.

For clear, unobstructed daylight conditions, this pyranometer compares favorably with first class thermopile-type pyranometers, but at a lower cost. The spectral response does not cover the full range of the solar spectrum, but the error induced is less than +/- 5% under most conditions of natural daylight.

The pyranometer should not be used under vegetation or artificial lights, because it has been calibrated for the daylight spectrum.

Coastal Environmental Systems, Inc. 820 1st Ave South, Seattle, WA 98134
(800) 488-8291 / (206) 682-6048 - fx: (206) 682-5658 www.CoastalEnvironmental.com

Rev 07/24/02

TECHNICAL SPECIFICATIONS

Range:	400 - 1100 nm
Sensitivity:	90 µA per 1000 Wm^{-2}
Accuracy:	Under natural daylight conditions, typical error is +/- 5%
Stability:	< +/- 2% change over a 1 year period
Temperature Dependence:	+/- 0.15% per °C maximum
Impedance:	147 ohms
Linearity:	+/- 1% for 0 to 3000 Wm^{-2}
Response Time:	10 µs
Relative Humidity:	0 - 100%
Detector:	High stability silicon photovoltaic detector (blue enhanced)

PHYSICAL

Sensor Housing:	Weatherproof anodized aluminum case Acrylic diffuser Stainless steel hardware
Size:	2.38 cm (diameter) x 2.54 cm (height) (0.94 in x 1 in)
Weight:	28 g (1 oz.)
Cable:	3 m (10 ft) (standard)

COASTAL ENVIRONMENTAL SYSTEMS, INC.

Tipping Bucket/ Rain Gauge
S1068W • S1068Z

• Rugged aluminum housing •
• Completely automatic •
• 0.01" accuracy •

This sensor consists of a gold anodized aluminum collector funnel with a knife edge that diverts the water to a tipping bucket mechanism. The mechanism is so designed that one alternate tip of the bucket occurs for each 0.01 inch of rainfall. Connecting the sensor to the ZENO® 3200 data logger, or to the WEATHERPAK® will allow record keeping of accumulated rainfall.

The spent water drains out of the bottom of the housing, so the sensor requires no attention or servicing of any kind. The aluminum housing is covered with a white baked enamel surface to withstand years of exposure to the environment. This sensor is factory calibrated, and due to the nature of its operation, should not require field calibration. Occasional cleaning of debris from the filter screen may be required.

Coastal Environmental Systems, Inc. 820 1st Ave South, Seattle, WA 98134
(800) 488-8291 / (206) 682-6048 - fx: (206) 682-5658 www.CoastalEnvironmental.com

Rev 03/16/05

TECHNICAL SPECIFICATIONS

Resolution:	0.01" (0.25 mm)
Accuracy:	1.0% at 2"/hr. or less
Average Switch Closure Time:	135 ms
Maximum Bounce Settling Time:	0.75 ms
Maximum Bounce Closure Time:	0.25 ms
Maximum Switch Rating:	30 VDC @ 2 A, 115 VAC @ 1 A
Temperature Limits:	0°C to +52°C (+32°F to +125°F)
Humidity Limits:	0 to 100%

PHYSICAL

Height:	10" (25.6 cm)
Weight:	2.5 lbs (1.13 kg)
Receiving Orifice Diameter:	6" (15.4 cm)
Cable:	15 ft, 2-conductor

Vaisala Weather Transmitter WXT510

Weather Transmitter	WXT510 A A 0 0	PRICE
Measurement parameters	**Wsd+RH+T+P+R** A	$1,985
	Default setting A	
Communication interface	**SDI-12 v 1.3, 1200 baud, 7,E,1** A	
	RS-232, Standard ASCII auto, 19200 baud,8,N,1 B	
	RS-485, Standard ASCII polled, 19200 baud, 8,N,1 C	
	RS-422, Standard ASCII auto, 19200 baud, 8,N,1 D	
	RS-422 NMEA 0183 v3.0, 4800 baud, 8,N,1 E	
Heating	**None** 0	
	Heating for wind and rain measurements 1	$85
Connector	**No connector, bushing accessories** A	
	8-pin M12 male connector and bushing accessories B	$50
Cable	**No cable** A	
	2 meters long 8-pin M12 cable B	$55
	10 meters long 8-pin M12 cable C	$95
Installation kit	**None** 0	
	Space holder for future option 1	
Supporting software	**No configuration tool** 0	
	Configuration tool (software and service cable) 1	$50
Manual	**No manual** A	
	English B	
Maintenance Contract	**No** 0	
	TOTAL	
	QTY	
	TOTAL VALUE	

Selections in bold are included in the prices of the basic versions.
Selections in italic are available at an extra price.
Shaded sections indicate typical selections.

Example of order code with typical settings:

WXT510	A	A	B	0	A	A	0	0	B	0

Accessories and Spare Parts:

Description:	Order Code:	PRICE
WXT510 PTU Module Spare Part	WXT510PTUSP	$195

VAISALA

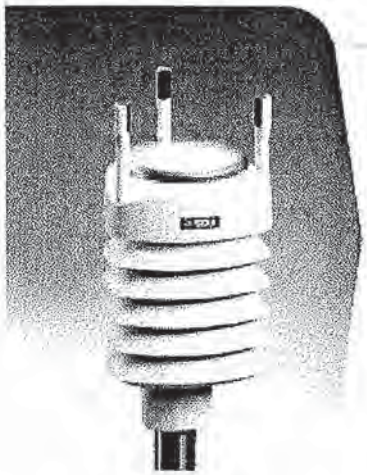

Vaisala Weather Transmitter WXT510

The WXT510 revolutionizes weather measurement: it offers a full set of sensors in one instrument, enabling you to easily set up a weather station. WXT510 measures wind speed and direction, liquid precipitation, barometric pressure, temperature and relative humidity — all a single device! WXT510 is compact, durable, simple to install and easy to integrate. As the instrument has no moving parts, it requires little to no maintenance. WXT510 provides unparalleled flexibility due to its various options, opening new possibilities for weather measurement.

The WXT510 is based on Vaisala's latest sensor technology. It combines advanced design with the decades of experience in environmental measurements.

Technical specifications

Wind speed	
Range	0...60 m/s
Accuracy	±0.3 m/s or 2%, whichever is greater
Wind direction	
Range	0...360°
Accuracy	±2°
Liquid precipitation	
Rainfall	cumulative accumulation after latest automatic or manual reset
Accuracy	5%*
Rain duration	counting each ten second increment whenever droplet detected
Rain intensity	one minute running average in ten second steps

* Due to the nature of the phenomenon, deviations caused by spatial variations may exist in precipitation readings, especially in short time scale. The accuracy specification does not include possible wind induced error.

Barometric pressure	
Range	600...1100 hPa
Accuracy	±0.5 hPa at 0...30 °C (+32...+86 °F) ±1 hPa at -52...+60 °C (-60...+140 °F)
Air temperature	
Range	-52...+60 °C (-60...+140 °F)
Accuracy at +20 °C (+68 °F)	±0.3 °C (±0.5 °F)
Relative humidity	
Range	0...100 %RH
Accuracy	±3 %RH within 0...90 %RH ±5 %RH within 90...100 %RH

For more information, please contact:
VAISALA Oyj
Tel. +358-(0)9-894 91
weather.transmitter@vaisala.com

Related documents

- WXT510 Order Guide (File size 15 Kb)
- WXT510 brochure française (File size 426 Kb)
- WXT510en brochure (File size 214 Kb)

Copyright © Vaisala 1998-2003.
Legal notice

P.O. Box 26, FIN-00421 Helsinki, FINLAND
Tel: +358 9 894 91
Fax: +358 9 8949 2485
Email: weather.transmitter@vaisala.com
www.vaisala.com

Vaisala Weather Transmitter WXT510
The Most Essential of Weather

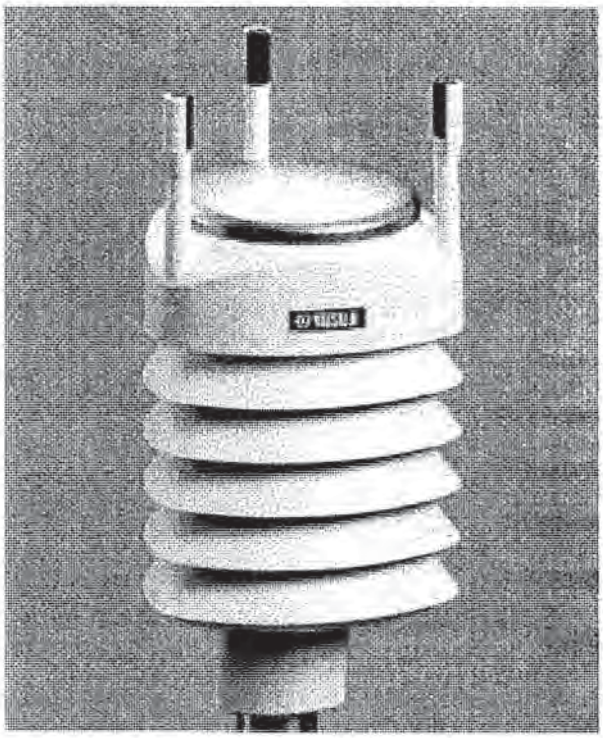

The Vaisala Weather Transmitter WXT510 makes building weather stations easier than ever. It combines decades of experience and the latest innovations on weather instruments into a compact and durable package.

Features/Benefits

- Six most essential weather parameters combined in one instrument
- Accurate and stable measurement
- Proven Vaisala sensor technology:
  - Vaisala WINDCAP® Ultrasonic Wind Sensor for wind speed and direction
  - Vaisala RAINCAP® Sensor for advanced precipitation measurement
  - Vaisala BAROCAP® Sensor for barometric pressure
  - Vaisala THERMOCAP® Sensor for temperature
  - Vaisala HUMICAP® Sensor for relative humidity
- No moving parts
- Low power consumption
- Compact and light weight
- Fast and simple to install
- Low maintenance
- WXT Configuration Tool for PC

The Vaisala Weather Transmitter WXT510 is a compact and lightweight multi-sensor instrument that measures the most essential weather parameters. It is a configurable product that can measure wind speed and direction, liquid precipitation, barometric pressure, temperature and relative humidity — all in one transmitter.

Affordable weather intelligence

The demand for accurate weather information is constantly increasing. In addition to professional meteorology, there are also numerous businesses that are weather sensitive, even though measuring the environment is not their actual core operation.

To meet the growing needs for easy-to-access weather data, the Vaisala Weather Transmitter WXT510 has been developed. It combines the modern sensor technology, advanced design and decades of experience in environmental measurements resulting a high quality instrument that reliably measures all essential weather parameters. This makes the WXT510 an optimal building block for dense weather measurement networks, and other weather stations used in multiple applications.

The WXT510 is truly flexible and it can be configured to meet most user requirements. The transmitter is easy to install with its one-bolt-mounting method. Easy and fast installation, as well as low power consumption make it ideal for use in weather stations or applications where light weight and compactness are an advantage. As the WXT510 has no moving parts, it is durable and has long maintenance intervals. The materials used are also highly resistent against UV radiation and corrosion.

Proven Vaisala technology

Accurate measurement begins with the sensors. Vaisala has decades of experience in designing and manufacturing weather sensors with field proven reliability and accuracy.

Accurate and Stable Measurement

Wind measurement

Both wind speed and direction are measured using the advanced Vaisala WINDCAP® Sensor. The sensor uses ultrasound to determine horizontal wind speed and direction. The array of three equally spaced ultrasonic transducers on a horizontal plane is an ideal, Vaisala proprietary design. The design ensures accurate wind measurement from all wind directions, without blind angles or corrupted readings.

The wind sensor has no moving parts, which makes it maintenance free. The measurement range for wind speed is from 0 to 60 m/s and for wind direction from 0 to 360°.

Precipitation measurement

The precipitation measurement is based on the Vaisala RAINCAP® Sensor, which detects the impact of individual rain drops. The signals exerting from the impacts are proportional to the volume of the drops. Hence, the signal from each drop can be converted directly to the accumulated rainfall.

Compared to traditional precipitation gauges, the Vaisala RAINCAP® Sensor gives more detailed information about precipitation. The WXT510 measures accumulated rainfall, rain intensity and duration of the rain — all in real time. Due to the measurement method, flooding, clogging as well as wetting and evaporation losses in rain measurement are eliminated.

The Vaisala RAINCAP® Sensor is the only maintenance-free precipitation sensor on the market.

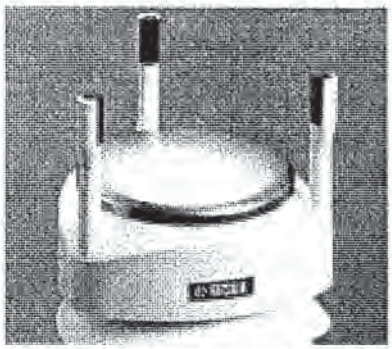

The WXT510 measures accumulated rain fall, rain intensity and duration of the rain in real time.

The patented ultrasonic based Vaisala WINDCAP® Sensor ensures accurate wind measurement from all wind directions.

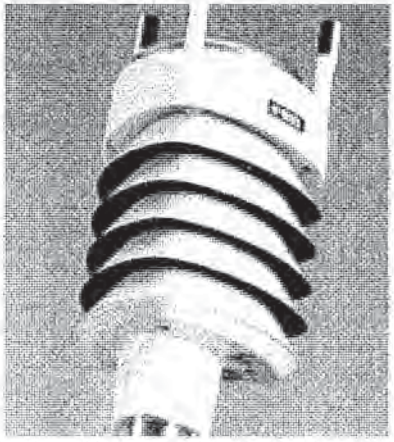

Barometric pressure, temperature and humidity sensors are combined in an advanced PTU module placed inside the specially designed radiation shield.

PTU module for barometric pressure, temperature and humidity

Barometric pressure, temperature and humidity measurements are combined in an advanced PTU module utilizing capacitive measurement method for each parameter.

Barometric pressure is measured using the silicon-based Vaisala BAROCAP® Sensor. The sensor has minimal hysteresis and excellent repeatability, as well as outstanding temperature and long-term stability. The measurement range for pressure is from 600 to 1100 hPa.

Temperature measurement is based on the ceramic Vaisala THERMOCAP® Sensor. The measurement range is from -52 to +60 °C.

Humidity measurement is based on the Vaisala HUMICAP® technology. The Vaisala HUMICAP® Sensor is highly accurate and it offers excellent long-term stability in a wide range of environments and negligible hysteresis. The measurement range for humidity is 0...100 %RH.

The whole PTU module is replaceable and available as a spare part.

The PTU module is mounted in a specially designed radiation shield. The shield protects the sensors from both scattered and direct solar radiation and precipitation. The plastic material in the plates offers excellent thermal characteristics and UV stabilized construction. The white outer surface reflects radiation, while the black inside absorbs accumulated heat.

VAISALA

P.O. Box 26, FIN-00421 Helsinki, FINLAND
Tel: +358 9 894 91
Fax: +358 9 8949 2485
Email: weather.transmitter@vaisala.com
www.vaisala.com

Simple to Install, Easy to Integrate

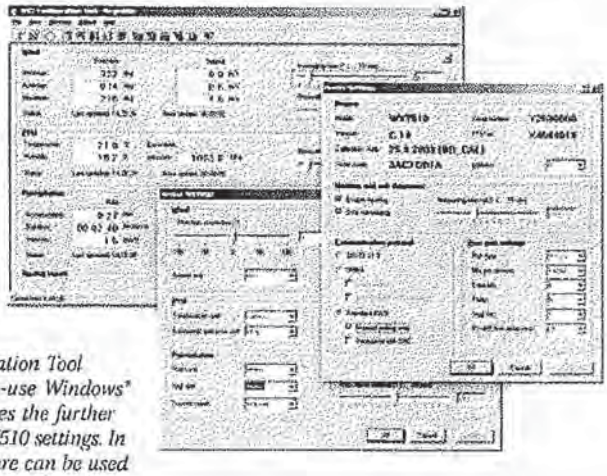

The WXT Configuration Tool includes an easy-to-use Windows® software that enables the further adjustment of WXT510 settings. In addition, the software can be used as a WXT510 user interface / display in a PC environment.

Heating to ensure constant data availability

In order to have measurement data constantly available and ensure correct measurement also during snowfall, the WXT510 offers heating for the wind and rain sensors. The heating circuit is separate from the operational power, which makes it possible to use separate supplies. The nominal input level for heating voltage is 12 V or 24 V (with automatic switch-over), either DC, AC or rectified AC. The WXT510 has an automatic control circuit that switches the heating on only at low temperatures.

Low power consumption and wide input voltage range

The Vaisala Weather Transmitter WXT510 is an excellent choice for applications where power consumption is a critical factor. During the idle mode the device typically consumes less than 0.1 mA.

The WXT510 has a wide input voltage range. Any 5... 30 VDC power supply can be used as long as it meets all applicable safety regulations.

Easy settings

The WXT510 is supplied pre-configured from the factory. If the factory settings are needed to be altered, the user friendly configuration tool, Windows® based WXT Configuration Tool, is available. Averaging times, output mode settings etc. are easy to change if required. The WXT Configuration Tool can also be used as a display for the WXT510 transmitter.

Flexible output options

The Vaisala Weather Transmitter WXT510 communicates with the host via a bi-directional serial line. It offers a choice of four configurable serial interfaces: SDI-12, RS-232, RS-485 and RS-422.

The screw terminals inside the bottom part of the transmitter are easy to access. For extra convenience an industry standard 8-pin M12 connector at the bottom of the transmitter is available as an option.

Easy installation

The Vaisala Weather Transmitter WXT510 has been designed considering easy installation. After assembling the calibrated PTU module, the WXT510 only needs to be mounted, aligned, and connected to the data logger and the power source.

The WXT510 can be mounted either on top of a pole mast or on to a cross arm. In both cases the mounting procedure is very simple. For facilitating the installation to the pole mast and eliminating the risk of misalignment during the use an optional mounting kit is available. With the mounting kit the north alignment needs to be performed only once.

Negligible maintenance need

The Vaisala Weather Transmitter WXT510 is calibrated at the factory and requires very little maintenance. The only maintenance actions are cleaning the transmitter when necessary and replacing the PTU module. Both rain and wind measurements are practically calibration free. The PTU unit has a recommended calibration interval of two years.

Technical Data

Wind

Wind speed	
Range	0...60 m/s
Response time	0.25 s
Available variables	average, maximum and minimum
Accuracy	± 0.3 m/s or ±2% whichever is greater
Output resolution	0.1 m/s (km/h, mph, knots)
Units available	m/s, km/h, mph, knots
Wind direction	
Azimuth	0...360°
Response time	250 ms
Available variables	Average, maximum and minimum
Accuracy	± 2°
Output resolution	1°
Measurement frame	
Averaging time	1...600 s (= 10 min), at one second steps on the basis of 0.25 second samples
Update interval	1...3 600 s (= 60 min), at one second steps

Liquid Precipitation

Rainfall	cumulative accumulation after latest automatic or manual reset
Collecting area	60 cm²
Output resolution	0.01 mm (0.001 in)
Accuracy	5% *
Units available	mm, in
Rain duration	counting each ten second increment whenever droplet detected
Output resolution	10 s
Rain intensity	one minute running average in ten second steps
Range	0...200 mm/h (broader range with reduced accuracy)
Output resolution	0.1 mm/h (0.01 in/h)
Units available	mm/h, in/h
Hail	cumulative amount of hits against collecting surface
Output resolution	0.1 hits/cm² (1 hits/in²)
Units avaiable	hits/cm², hits/in², hits
Hail duration	counting each ten second increment whenever hailstone detected
Output resolution	10 s
Hail intensity	one minute running average in ten second steps
Output resolution	0.1 hits/cm²h (1 hits/in²h)
Units available	hits/cm²h, hits/in²h, hits/h

* Due to the nature of the phenomenon, deviations caused by spatial variations may exist in precipitation readings, especially in short time scale. The accuracy specification does not include possible wind induced error.

PTU module = Barometric Pressure, Air Temperature and Relative Humidity

Barometric Pressure

Range	600...1 100 hPa
Accuracy	±0.5 hPa at 0...+30 °C (+32...+86 °F) ±1 hPa at -52...+60 °C (-60...+140 °F)
Output resolution	0.1 hPa, 10 Pa, 0.0001 bar, 0.1 mmHg, 0.01 inHg
Units available	hPa, Pa, bar, mmHg, inHg

Air Temperature

Range	-52 ... +60 °C (-60...+140 °F)
Accuracy (for sensor element) at +20 °C (+68 °F)	±0.3 °C (±0.5 °F)
Accuracy over temperature range (see graph)	

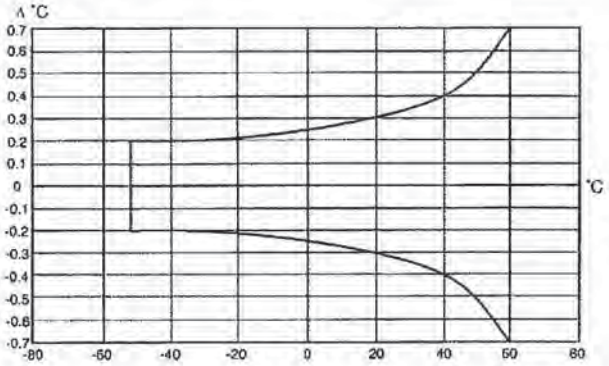

Output resolution	0.1 °C (0.1°F)
Units available	°C, °F

Relative Humidity

Range	0...100 %RH
Accuracy	±3 %RH within 0...90 %RH ±5 %RH within 90...100 %RH
Output resolution	0.1 %RH

PTU Update Interval

Update interval	3...3 600 s (= 60 min), at one second steps

VAISALA

P.O. Box 26, FIN-00421 Helsinki, FINLAND
Tel: +358 9 894 91
Fax: +358 9 8949 2485
Email: weather.transmitter@vaisala.com
www.vaisala.com

Technical Data, Dimensions

General

Self-diagnostic	separate supervision message, unit/status fields to validate measurement quality
Start-up	automatic, < 10 seconds from power on to the first valid output
Communication protocols	SDI-12 v1.3, ASCII automatic & polled, NMEA-0183 v3.0 with query option
Port H/W	SDI-12, RS-232, RS-485, RS-422
Baud rate	1 200, 2 400...115 200
Operating temperature	-52...+60 °C (-60...+140 °F)
Storage temperature	-60...+70 °C (-76...+158 °F)
Operating humidity	0...100 %RH
Dimensions	
Height	240 mm (9.4 in)
Diameter	120 mm (4.7 in)
Weight	650 g (1.43 lbs)

Power Supply

Input Voltage	5...30 VDC
Power consumption on average	
minimum	0.07 mA @ 12 VDC (in SDI-12 mode)
maximum	13 mA @ 30 VDC (with continuous measurement of all parameters)
typical	3 mA @ 12 VDC (with default measuring intervals)
Heating voltage	options: DC, AC, full wave rectified AC
recommended ranges	12 VDC ±20%, 1.1 A max.
	24 VDC ±20%, 0.6 A max.
	68 V_{pp} ±20% (AC), 0.6 A_{rms} max.
	34 V_p ±20% (f/w rect. AC), 0.6 A_{rms} max.
absolute max	30 VDC
	84 V_{pp} (AC)
	42 V_p (f/w rect. AC)

Electromagnetic compatibility

Complies with EMC standard: EN61326-1:1997 + Am1:1998 + Am2:2001: Generic Environment.

Dimensions

Dimensions in mm (inches).

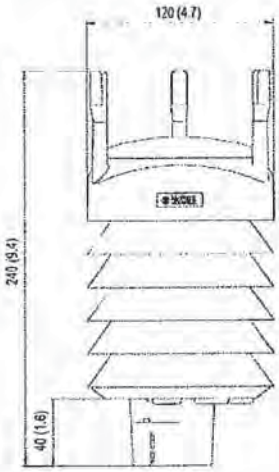

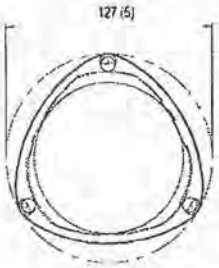

Mounting kit (optional)

BAROCAP, HUMICAP, RAINCAP, THERMOCAP and WINDCAP are registered trademarks of Vaisala. Specifications subject to change without prior notice. © Vaisala Oyj

CE

Incorporates Latest Sensor Technology

Operating Principles of Wind and Rain Measurement

Vaisala WINDCAP® Sensor

The Vaisala WINDCAP® Sensor enables wind measurement with no moving or wearing parts. The measurement of wind speed and direction is based on sonic technology.

The Vaisala WINDCAP® Sensor is used in Vaisala Weather Transmitter WXT510 and Vaisala Ultrasonic Wind Sensor WS425.

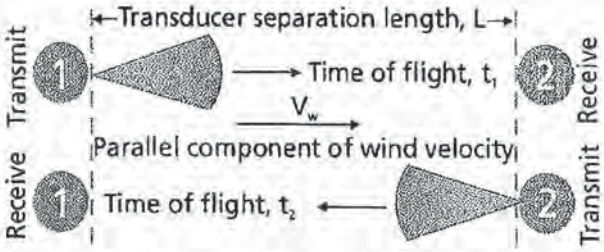

For static speed of sound V_s: $\frac{1}{t_1} = \frac{V_s + V_w}{L}$ and $\frac{1}{t_2} = \frac{V_s - V_w}{L}$

Combine to remove V_s: $V_w = \frac{L}{2}\left(\frac{1}{t_1} - \frac{1}{t_2}\right)$
Solve for V_w

Time-of-flight for a sonic impulse from the transmit transducer to the receive transducer is determined for both directions. Simple algebra allows solving for the parallel component of wind velocity independently of the static speed of sound.

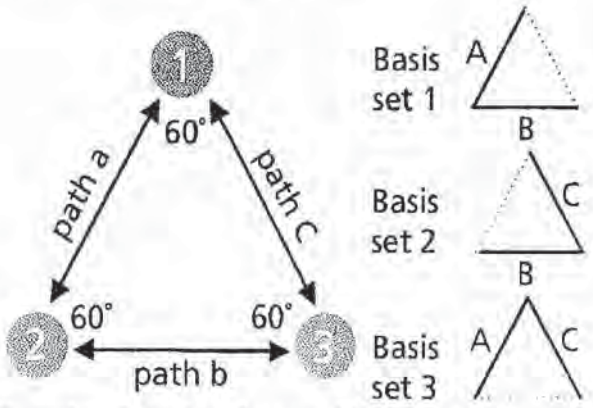

The equilateral triangle configuration of the three transducers provides three possible sets of basis vectors. The combinations yield bi-directional measurements on the paths labeled A, B and C. These measurements are used to determine the wind velocity components parallel to each of the three paths.

Vaisala RAINCAP® Sensor

The precipitation measurementy used in the Vaisala Weather Transmitter WXT510 is based on Vaisala's proprietary RAINCAP® technology. This acoustic rain measurement technology measures rainfall literally drop by drop, which means that the measurement is not affected by evaporation or wetting losses. In addition, the measurement is immune to flooding induced errors, because the sensor does not collect water.

The Vaisala RAINCAP® Sensor has no moving parts and therefore it requires practically no maintenance.

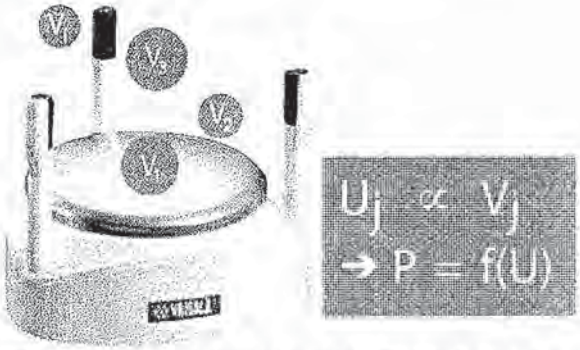

The precipitation sensor detects the impact of individual raindrops. The voltage signals U_j resulting from the impacts are proportional to the volume of the drops V_j and therefore, the signal of each drop can be directly converted to accumulated precipitation P.

weather

Advanced Weather
Reporting For An
Unpredictable World

1165 National D
Sacramento, CA

Tel (916) 928-1C
Fax (916) 928-1
EMAIL sglanden
http://www.allwe

Date: 6-Jun-05

Quotation #: 111667

To: Burgess & Niple
5085 Reed Rd.
Columbus, OH 43220

Attn: Roger Denick
Fax#:
Phone#: (614) 459-2050
email: rdenick@burnip.com

Valid for 90 Days

TERMS: Per Standard All Weather Inc Terms and Conditions of Sale

TAMS QUOTATION

Part #	Qty	Description	Price	Ext. Price
9602	1	Basic Transmitter Unit with Automatic Compass (WS, WD, TEMP, RH)	$ 5,162.50	$ 5,162.50
9610	1	Metview Software, Includes TAMSTERM Software, 9611	$ 57.70	$ 57.70
96033	1	Silicon Cell Pyranometer Kit includes: 3120 Silicon Cell Pyranometer (Global Radiation)	$ 980.00	$ 980.00
6011-A	1	Rainfall Sensor	$ 1,418.00	$ 1,418.00
4501	1	Soil / Water Temperature Probe: 3 element thermister	$ 153.00	$ 153.00
9605	1	Transmitter Case UHF Radio Kit includes: UHF Radio, Power Regulator, Radio Modem, Stub Antenna	$ 2,667.50	$ 2,667.50
9606	1	Receiver Case UHF Radio Kit includes: UHF Radio, Power Regulator, Radio Modem, Stub Antenna	$ 2,752.50	$ 2,752.50
96003	1	Weather Proof Transmitter Case	$ 1,510.00	$ 1,510.00
96004	1	Weather Proof Receiver Case	$ 1,090.00	$ 1,090.00
96006	1	Boom Adaptor, Antenna , optional sensors	$ 52.50	$ 52.50
96005	1	10 foot self guying tripod	$ 855.00	$ 855.00
96011	1	220V Power Adaptor, 1200ma	$ 130.00	$ 130.00
96037	1	18 watt Solar Panel	$ 812.50	$ 812.50
96019	1	15 ft Cable Sensor Package to Case	$ 190.00	$ 190.00
96024	1	50 ft Cable, RS232 Computer to Handheld Display	$ 135.00	$ 135.00
96026	1	Cable, Auxiliary Sensor Adaptor	$ 325.00	$ 325.00
96031	1	220V RS485 to RS232 Convertor Kit	$ 480.00	$ 480.00
		Total TAMS System Price:		$ 18,771.20

NOTES: Civil Works, shipping charges and applicable taxes are the buyer's

SPECIFICATIONS

General

Input Power:
- Voltage: 11-16VDC
- Current: 50mA typical (no radio)

Serial Output:
- RS-485
  - baud rate: 4800
  - max. distance: 4,000'
- RS-232
  - baud rate: 4800
  - max. distance: 100'

Environmental Parameters

	Low	*High*
Operating Ambient Conditions		
System (except displays)		
Temperature	-40°F (-40°C)	130°F (55°C)
Humidity	0%	98% condensing
Wind		100 mph
Displays		
Temperature	0°F (-18°C)	122°F (50°C)
Humidity	0%	98% non-condensing
Storage Ambient Conditions		
System (except displays)		
Temperature	-55°F (-48°C)	135°F (57°C)
Humidity	0%	98% condensing
Displays		
Temperature	0°F (-18°C)	135°F (57°C)
Humidity	0%	98% non-condensing

Met Station

Wind Speed:
- Range: 2 to 55 mph
- Accuracy: ±1 mph or ±5% of reading (whichever is greater)
- Resolution: 1 mph
- Threshold: 2 mph

Wind Direction:
- Range: 0-360°
- Accuracy: ±5° RMSE
- Resolution: 10°

Temperature (subject to constraints of natural aspiration):
- Range: -40 to +130°F (-40 to +55°C)
- Accuracy: -40 to -10°F (-40 to -24°C) ±3°F/±2°C
  - -9 to +110°F (-23 to +43°C) ±1°F/±1°C
  - +110 to +130°F (+43 to +55°C) ±3°F/±2°C
- Resolution: 1°F/1°C

Humidity (subject to constraints of natural aspiration):
- Range: 0-100% RH
- Accuracy: ±3% from -40 to +130°F (-40 to +55°C)
- Resolution: 1%

Barometric Pressure (subject to constraints of measurement at high wind speeds):
- Range: 18 to 32 in. Hg (610 to 1084 mb)
- Accuracy:
  - -4 to +149°F (-20 to +65°C) case temp.:
    - ±0.03 in. Hg (±1 mb) typ.
    - ±0.075 in. Hg (±2.5 mb) max.
  - -40 to -4°F (-40 to -20°C) case temp.:
    - ±0.125 in. Hg (±4.2 mb) max.
- Resolution: 0.01 in. Hg/0.1 mb

Size: 8.5"L x 6.75"H x 2.0"D (216mm x 171mm x 51mm)
Weight: 2 lbs. (0.9 kg) maximum

Tripod
Tubing Material: aluminum
Height (fully extended): 10'

Compass
Range: 0-359°
Accuracy: ±3° (with compass oriented horizontally to earth within ±15°)
Resolution: 1°

Radio
Frequency: 467.75 MHz
RF Output Power: 2W
Sensitivity: 1 μV for less than 1 x 10E-6 BER

Battery
Type: Sealed dry cell lead acid
Capacity: 12V, 5 amp hours
Max. Recommended Storage Time: 24 months @25°C (decreasing with increasing temp.)

Battery Charger
Input Voltage: 12-18VDC
Charge Current: 750mA (typical)
Battery Charge Time (from full discharge): 7.5 hours
Trickle Current: 40mA (typical)

Control/Display
Power: 6 or 12 AA batteries, optional lithium batteries, or 9-15 Vdc external source
Operating Range: 24 hours continuous operation with alkaline batteries
Serial Output: RS-232 asynchronous, 1200 baud, no parity
Size: 9"L x 3.75"H x 1.7"D (229mm x 95mm x 43mm)
Weight: 2 lbs. (0.9 kg) maximum
Serial Output to Met Station: RS485

TETHERSONDE/RADIOSONDE

VAISALA

Vaisala DigiCORA Tethersonde System

The tethered approach to researching the atmospheric boundary layer

VAISALA

Vaisala Tethersonde TTS111

- **High-resolution PTU and wind measurement**
- **Precision sensors that are easy to change in the field**
- **Lightweight, easy to operate**

APPLICATIONS

- Tethered meteorological and air quality research
- Agricultural, forestry and acoustic research
- Profiler and SODAR comparisons
- Measurement of inversion height and atmospheric stability

The Vaisala Tethersonde TTS111 is an intrinsic part of the Vaisala DigiCORA Tethersonde System. Specially designed for atmospheric boundary layer measurement, it accurately measures PTU and wind speed/direction. The optional Vaisala Tethered Ozonesonde TTO111 can also be used to acquire ozone data. Up to six Tethersondes can be attached at the desired points on the tetherline beneath a blimp-shaped tethered balloon. The tethered balloon is raised to a maximum altitude of 3 km by the Vaisala Electric Winch TTW111 and then lowered.

The Tethersonde's transmitter operates in the 400 - 406 MHz meteorological band. The user can select the transmitter frequency. Pressure, temperature, and humidity (PTU) are measured by the same tried-and-true sensors used in Vaisala radiosondes. Best of all, the sensor modules are sealed, consumable components. They can be discarded after their usable lifetime and replaced with a fresh module, rather than returned to the factory for expensive re-calibration. A single 9V alkaline or lithium battery powers the Tethersondes. Optional external battery packs are available for extended flight times.

Wind speed is measured with a patented three-cup anemometer and a light-chopper tachometer. The anemometer is very sensitive and has a very low starting speed. The Tethersonde's aerodynamic wind vanes and a small digital compass are used to measure wind direction. The compass is very accurate and easy to calibrate in the field.

A typical Vaisala DigiCORA Tethersonde System will comprise:

- Vaisala Sounding Processor SPS220T
- DigiCORA III laptop (MWLAPPC) as standard
- TT12SW Windows™-based software
- RM21 antenna set (400 MHz telemetry antenna with preamplifier)
- Up to six Vaisala Tethersondes
- Vaisala Electric Winch TTW111 with tetherline
- Vaisala Tethered Balloon TTB Series
- Optional Vaisala Tethered Ozonesonde TTO111
- Optional Vaisala External Battery Pack TTP111 (6 AA batteries)

The following off-the-shelf spare parts are available:

- URR20 UHF receiver
- UPP210A receiver processor
- MWP210 main power supply
- MWI210 Ethernet card

TECHNICAL INFORMATION

TEMPERATURE
F-THERMOCAP® CAPACITIVE WIRE

Measuring range	-50 ... +60 °C
Resolution	0.1 °C
Response time **	0.2 s
Repeatability of calibration *	0.15 °C
Uncertainty in sounding ***	0.5 °C
Reproducibility in sounding ****	0.2 °C

HUMIDITY
H-HUMICAP® THIN FILM CAPACITOR

Measuring range	0 ... 100 %RH
Resolution	0.1 %RH
Response time @ +20°C **	< 0.5 s
Repeatability of calibration *	2% RH
Uncertainty in sounding ***	5% RH
Reproducibility in sounding ****	3% RH

PRESSURE
BAROCAP® SILICON SENSOR

Measuring range	500 ... 1080 hPa
Resolution	0.1 hPa
Repeatability of calibration *	0.4 hPa
Uncertainty in sounding ***	1.5 hPa
Reproducibility in sounding ****	0.5 hPa

WIND SPEED
3-CUP ANEMOMETER

Measuring range	0 ...20 m/s
Resolution	0.1 m/s

WIND DIRECTION
DIGITAL COMPASS

Measuring range	0 ...360°
Resolution	1°

ANALOG TO DIGITAL CHANNELS

Measuring range	0 ...2.000 VDC
Resolution	0.001 VDC

OZONE CHANNELS

Current measuring range	0 ...10.000 µA
Current resolution	0.003 µA
Temperature measuring range	0 ... +40 °C
Temperature resolution	0.1 °C

TRANSMITTER

Modulation	GFSK
Frequency	400...406 MHz
Adjustable frequency steps	10 kHz
Bandwidth	< 20 kHz
Power	+12 dBm (nominal) or 16 mW

GENERAL

Dimensions	approx. 145 cm x 32 cm x 32 cm
Power source	9 V battery
Power consumption	100 mA
Weight incl. sensors and internal battery	300 g
Operating temperature	0 ... +50 °C
Storage conditions:	RH <85%, 5 ... +40 °C

* Standard deviation of differences between two successive repeated calibrations, k = 2 confidence level

** Step response to 63.2 % @ 6m/s flow @ 1000hPa

*** 2-sigma (95,5 %) confidence level (k=2), cumulative uncertainty including repeatability, long-term stability, effects due to measuring conditions, dynamic effects (such as response time) and effects due to measurement electronics

**** standard deviation of differences, in twin soundings divided by 2

Vaisala reserves the right to change the specifications without prior notice.

VAISALA

Your Partner in All Weather

Vaisala Oyj
Helsinki, Finland
Tel. +358 9 894 91
Fax +358 9 894 9227

Vaisala GmbH
Hamburg, Germany
Tel. +49 40 839 030
Fax +49 40 839 03 110

Vaisala Ltd
Birmingham, UK
(Traffic Weather Products only)
Tel. +44 121 683 1200
Fax +44 121 683 1299

Vaisala Ltd
Newmarket, UK
(Upper Air and SurfaceWeather Products only)
Tel. +44 1638 576 200
Fax +44 1638 576 240

Vaisala SA
Paris, France
Tel. +33 1 30 57 27 28
Fax +33 1 30 96 08 58

Vaisala SA
Meyreuil, France
(Thunderstorm Systems only)
Tel. +33 4 42 12 64 64
Fax +33 4 42 12 64 74

Vaisala Inc.
Woburn, MA, USA
Tel. +1 781 933 4500
Fax +1 781 933 8029

Vaisala Inc.
Columbus, OH, USA
(Aviation Weather Systems only)
Tel. +1 614 873 6880
Fax +1 614 873 6890

Vaisala Inc.
Boulder, CO, USA
Tel. +1 303 499 1701
Fax +1 303 499 1767

Vaisala Inc.
Tucson, AZ, USA
(Thunderstorm Systems and Data only)
Tel. +1 520 806 7300
Fax +1 520 741 2848

Vaisala Inc.
Sunnyvale, CA, USA
(Surface Weather Products only)
Tel. +1 408 734 9640
Fax +1 408 734 0655

Vaisala Inc. Regional Office
London, ON, Canada
Tel. +1 519 679 9563
Fax +1 519 679 9992

Vaisala KK
Tokyo, Japan
Tel. +81 3 3266 9611
Fax +81 3 3266 9610

Vaisala Pty Ltd
Hawthorn, Vic , Australia
Tel. +61 3 9818 4200
Fax +61 3 9818 4522

Vaisala Beijing
Representative Office
P.R.China
Tel. +86 10 6522 4041
Fax +86 10 6522 4051

Vaisala Regional Office Malaysia
Kuala Lumpur, Malaysia
Tel. +60 3 2169 7776
Fax +60 3 2169 7775

For more detailed contact information and for other Vaisala locations visit us at: www.vaisala.com

Ref. B210350EN-A

Detailed Profiles of the Atmospheric Boundary Layer

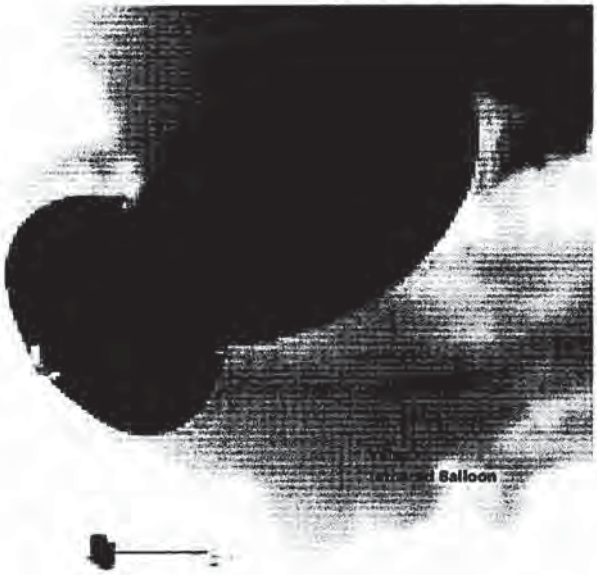

The Vaisala DigiCORA Tethersonde System gives the research meteorologist a detailed profile of the atmospheric boundary layer by raising and lowering a single Vaisala Tethersonde.

The system can also be used as a tower to measure atmospheric conditions over time at multiple levels. In this case, the Vaisala Sounding Processor SPS220T and PC-based workstation will sequentially process signals from up to six Tethersondes attached at various heights along the tetherline.

Each Vaisala Tethersonde measures temperature, humidity, pressure, wind speed and wind direction. Optional Vaisala Tethered Ozonesondes are also available. Six additional A/D channels are provided for user-supplied sensors with the appropriate outputs.

The Vaisala DigiCORA Tethersonde System is easy to transport. Set-up is accomplished in a few minutes, even at remote sites.

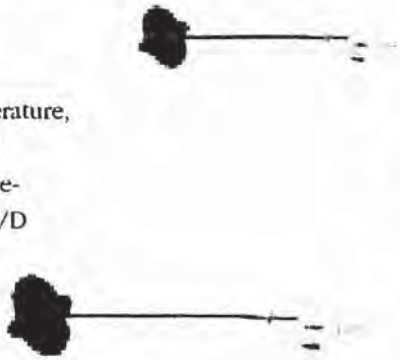

Up to six Vaisala Tethersondes

Vaisala Electric Winch with tetherline

The Vaisala DigiCORA Tethersonde System is built on the Vaisala DigiCORA III Sounding System. A typical system will comprise:

- Vaisala Sounding Processor SPS220T
- Notebook PC with Windows 2000®-based application software package
- Antenna with pre-amplifier
- Vaisala Electric Winch with tetherline
- Vaisala Tethered Balloon
- Up to six Vaisala Tethersondes
- Options: Vaisala Tethered Ozonesonde and external battery packs

The Vaisala Sounding Processor SPS220T houses the receiver and data processor. It decodes the digital data received from the Tethersondes and passes it, via an Ethernet connection, to a notebook PC for analysis and archiving. Vaisala's Windows 2000®-based TT12SW software is used to control the SPS220T receiver, as well as to acquire the Tethersonde serial numbers and sensor coefficients. The TT12SW software also provides tabular and graphical presentations of the data acquired from each Tethersonde and the optional Tethered Ozonesonde. Flight files can be archived and replayed later. The Tethersondes transmit data to the SPS220 Sounding Processor in the 400 to 406 MHz meteorological band.

Applications

- Air pollution studies
- Meteorological research
- Agricultural, forestry and acoustic research
- Profiler and SODAR comparisons
- Measurement of inversion height and atmospheric stability

Optional components: Vaisala Tethered Ozonesonde and external battery packs

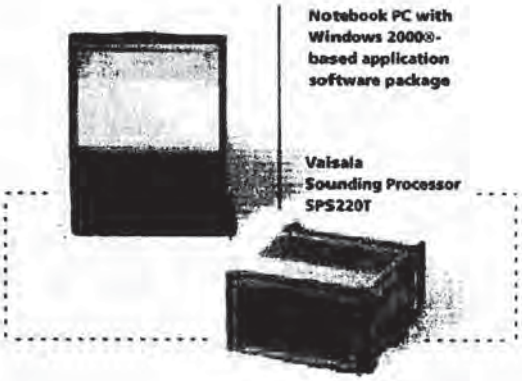

Vaisala 400 MHz telemetry antenna with pre-amplifier mounted on optional portable tripod

Vaisala Tethersonde

Up to six lightweight Vaisala Tethersondes can be deployed at the same time. Their temperature, humidity and pressure sensors are the same tried and true sensors used in the Vaisala Radiosonde RS90 and the Vaisala Rocketsonde. Attached or removed from the tetherline in seconds, they are easy to deploy in the field. Best of all, the sensor modules are sealed, consumable components that can be discarded after their usable lifetime and replaced with a fresh module, rather than returned to the factory for expensive re-calibration.

The Tethersondes are powered by a single 9V alkaline or lithium battery, and optional external battery packs are available for extended flight times.

Tethered balloons are available in a variety of sizes. Filled with helium or hydrogen, they are deployed by means of the Vaisala Electric Winch. Tetherlines of various lengths and break strengths are available.

Flexibility with DigiCORA III

Since the Vaisala DigiCORA Tethersonde System is based on the Vaisala DigiCORA III Sounding System, Vaisala GPS radiosonde and 1680 MHz Radiotheodolite operations can be undertaken with the same system. Modular upgrades consisting of software packages, Sounding Processor cards and antennas can significantly expand the system's capabilities. Conversely, the system can be provided as a modular upgrade to existing DigiCORA III Sounding Systems.

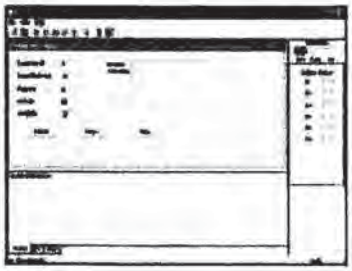

The main screen of the Vaisala DigiCORA Tethersonde System software.

Vaisala Service Contract

The Vaisala Service Contract, Level 1, is included in the price of the Vaisala DigiCORA Tethersonde System. This contract is valid for the 12 months following delivery upon signing of the Service Agreement. The Level 1 Service and Maintenance Contract includes:

- Software upgrades containing new features as they become available
- User guide upgrades as they become available

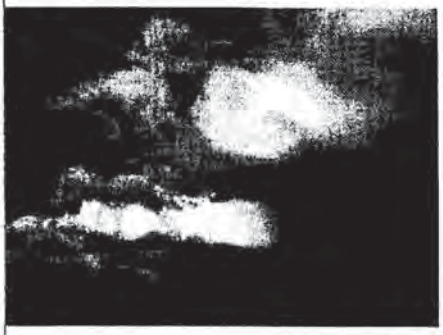

About Vaisala

Vaisala sensors, instruments and systems are used the world over by organizations that need to measure the environment with great accuracy and consistency.

The Vaisala Group is a successful international technology company that develops and manufactures electronic measurement systems and equipment for meteorology, the environmental sciences, traffic safety and industry.

Vaisala employed over 1,100 skilled professionals and achieved net sales of EUR 183.5 million in 2001. Exports accounted for 96% of net sales. Vaisala's A-series shares are listed on the Helsinki Exchanges.

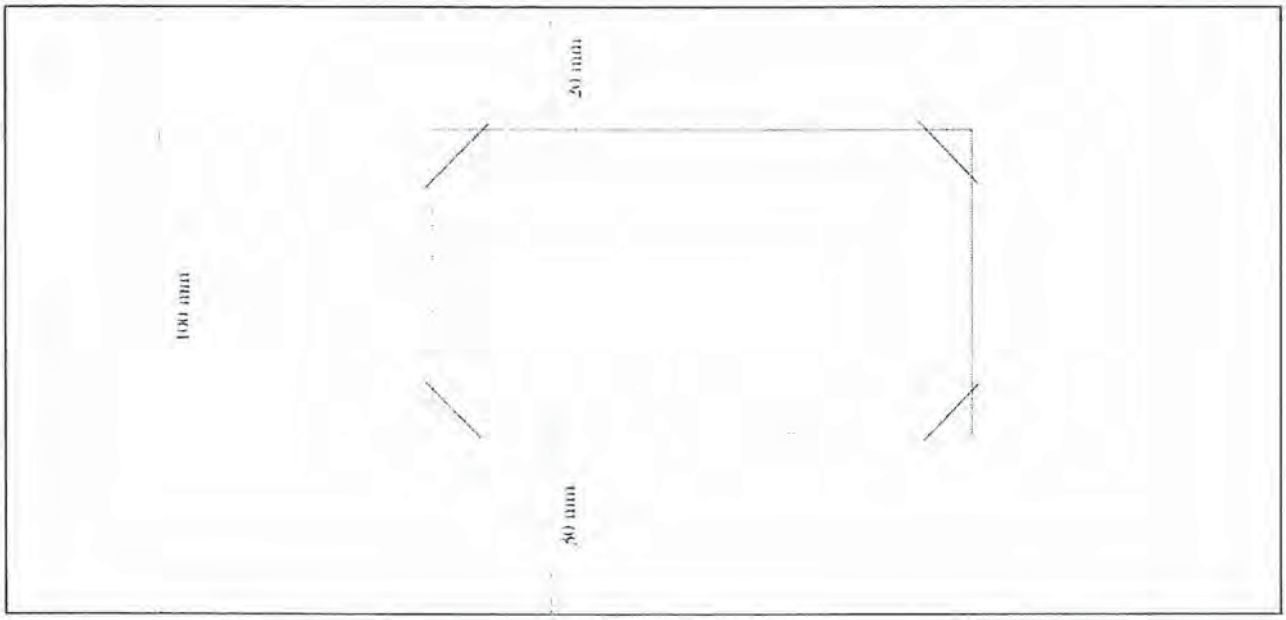

VAISALA

Vaisala Tethered Ozonesonde

- **Reliable and accurate ozone measurement**
- **High resolution and sampling rate**
- **RF interference eliminated**
- **Pump temperature monitoring**
- **Advanced software package**

The Vaisala Tethered Ozonesonde is a re-usable instrument consisting of an ozone sensor and an ozone interface card mounted in an insulated flight container. The ozone sensor combines an electrochemical cell and a non-reactive gas sampling pump to provide efficient and consistent ozone measurement. The Tethered Ozonesonde is connected to the Vaisala DigiCORA Tethersonde System tetherline and linked by a flexible cable to a Vaisala Tethersonde. Ozone data along with temperature, pressure, humidity, wind speed/direction data are transmitted to the Vaisala DigiCORA Sounding Processor and workstation PC, which automatically process the sounding data.

ECC OZONE SENSOR

The ECC ozone sensor reliably and accurately detects ozone on the basis of an iodide redox reaction. The sensor's electrochemical cell consists of two platinum electrodes in separate anode and cathode chambers, immersed in potassium iodide solutions of different concentrations. The chambers are linked by an ion bridge. As air containing ozone flows into the cathode solution, a chemical reaction occurs resulting in a potential difference between the cathode and anode chambers. This produces a small, measurable current across the ion bridge. The electrical current generated is in proportion to the rate at which ozone enters the cell. The current is measured and ozone concentration data is relayed to the Vaisala Tethersonde, which transmits the ozone and meteorological data to the receiving equipment. The software calculates the ozone concentration, or partial pressure, taking into account the pump flow rate, air pressure and pump temperature.

OZONE INTERFACE CARD

The Vaisala Tethered Ozonesonde is supplied with an ozone interface card that converts the low-level signals from the ECC sensor to an output that is compatible with the Vaisala Tethersonde's A/D channels. The interface card is housed with the ECC in the insulated flight container.

TECHNICAL INFORMATION

OZONE SENSOR ECC

Dimensions (including weatherproof insulated flight container)	650 x 210 x 114 mm L(rod) x H x W mm
Weight	600 grams including battery
Operating temperature	0 to 40 °C
Operating pressure	Sea level to 500 hPa

The specifications of the ECC sensor are given by the manufacturer. The ECC has been used up to an altitude of 40 km and 3 hPa. The evaporation of the sensor liquids limits the measuring time to 2-3 hours. The temperature inside the flight box must be above 0 °C. For details on the accuracy of the sensor, please refer to the appropriate Vaisala User's Guide.

START-UP KIT

A start-up kit that contains all the required equipment and materials needed to test and prepare the ECC sensor is available from Vaisala.

OZONE INTERFACE

Manufactured by Vaisala
Fits into the ozone sensor's casing
RF - protected

CURRENT MEASUREMENTS

Measuring range	0 ... 10 uA
Accuracy	+/- 0.010 uA
Resolution	0.003 uA

CURRENT MEASUREMENTS

Measuring range	0 ... 40.0 C
Accuracy	+/- 0.1 C
Resolution	+/- 0.03 C

SAMPLING RATE (AVERAGE)

Ozone current	1.0 s
Temperature	1.0 s
Power consumption	5.0 mW

The ECC Ozone Sensor in combination with the Vaisala DigiCORA Tethersonde System Ozonesonde Interface has been tested according to the applicable provisions of the EU directives and has been found to be in conformance with them.

VAISALA

Your Partner in All Weather

Vaisala Oyj
Helsinki, Finland
Tel. +358 9 894 91
Fax +358 9 894 9227

Vaisala GmbH
Hamburg, Germany
Tel. +49 40 839 030
Fax +49 40 839 03 110

Vaisala Ltd
Birmingham, UK
(Traffic Weather Products only)
Tel. +44 121 683 1200
Fax +44 121 683 1299

Vaisala Ltd
Newmarket, UK
(Upper Air and SurfaceWeather Products only)
Tel. +44 1638 576 200
Fax +44 1638 576 240

Vaisala SA
Paris, France
Tel. +33 1 30 57 2728
Fax +33 1 30 96 0858

Vaisala SA
Meyreuil, France
(Thunderstorm Systems only)
Tel. +33 4 42 12 6464
Fax +33 4 42 12 6474

Vaisala Inc.
Woburn, MA, USA
Tel. +1 781 933 4500
Fax +1 781 933 8029

Vaisala Inc.
Columbus, OH, USA
(Aviation Weather Systems only)
Tel. +1 614 873 6880
Fax +1 614 873 6890

Vaisala Inc.
Boulder, CO, USA
Tel. +1 303 499 1701
Fax +1 303 499 1767

Vaisala Inc.
Tucson, AZ, USA
(Thunderstorm Systems and Data only)
Tel. +1 520 806 7300
Fax +1 520 741 2848

Vaisala Inc.
Sunnyvale, CA, USA
(Surface Weather Products only)
Tel. +1 408 734 9640
Fax +1 408 734 0655

Vaisala Inc. Regional Office
London, ON, Canada
Tel. +1 519 679 9563
Fax +1 519 679 9992

Vaisala KK
Tokyo, Japan
Tel. +81 3 3266 9611
Fax +81 3 3266 9610

Vaisala Pty Ltd
Hawthorn, Vic., Australia
Tel. +61 3 9818 4200
Fax +61 3 9818 4522

Vaisala Beijing
Representative Office
P.R.China
Tel. +86 10 6522 4041
Fax +86 10 6522 4051

Vaisala Regional Office Malaysia
Kuala Lumpur, Malaysia
Tel. +60 3 2169 7776
Fax +60 3 2169 7775

For more detailed contact information and for other Vaisala locations visit us at: www.vaisala.com

Ref. B210349EN-A

VAISALA

Vaisala Sounding Processor SPS220T

- **The data receiver and processor of the Vaisala DigiCORA Tethersonde System**
- **Receives pressure, temperature, humidity, wind speed/direction data from the tethersondes, pre-processes it and sends it to the PC workstation**
- **Optional radiosonde data reception**

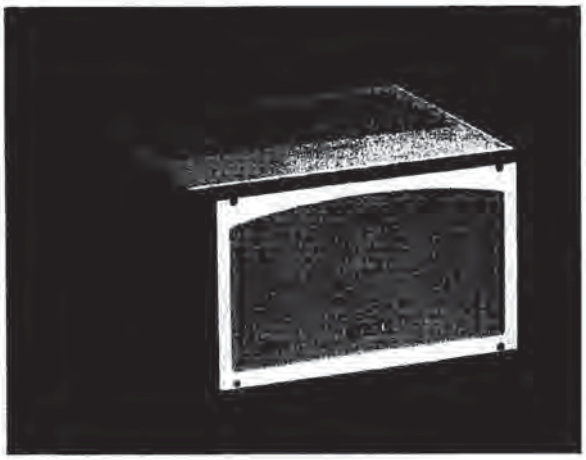

APPLICATIONS

- Tethered meteorological and air quality research
- Agricultural, forestry and acoustic research
- Profiler and SODAR comparisons
- Measurement of inversion height and atmospheric stability

The Vaisala Sounding Processor SPS220T is the data receiver and processor in the Vaisala DigiCORA Tethersonde System. Vaisala Tethersondes transmit signals to the SPS220T, which receives them, pre-processes them, and outputs the decoded PTU, wind speed and wind direction data directly to a workstation PC. This data is is of great value to meteorologists researching a wide variety of weather phenomena.

Vaisala Tethersondes measure barometric pressure, temperature, relative humidity, wind speed and wind direction, and transmit signals in the 400-406 MHz meteorological band. The signals consist of sensor readings and sensor-specific calibration coefficients. The SPS220T decodes the GFSK modulated and encrypted data, and outputs it in ASCII format without meteorological corrections or adjustments. The SPS220T also checks for errors in the transmission frames. It does not output data frames in which errors are detected.

The SPS220T receiver frequency is controlled by the Vaisala DigiCORA Tethersonde System workstation and Windows® software.

A typical Vaisala DigiCORA Tethersonde System will comprise:

- Vaisala Sounding Processor SPS220T
- Laptop PC
- Windows®-based DigiCORA Tethersonde software
- 400 MHz telemetry antenna with preamplifier
- Up to six Vaisala Tethersondes
- Vaisala Electric Winch TTW111 with tetherline
- Vaisala Tethered Balloon TTB Series
- Optional Vaisala Tethered Ozonesonde TTO111

The following off-the-shelf spare parts are available:

- URR20 UHF receiver
- UPP210A receiver processor
- MWP210 main power supply
- MWI210 Ethernet card

TECHNICAL INFORMATION

GENERAL

Dimensions	235 x 285 x 150 mm
Desktop casing	
Power consumption	25 W
Mains voltage	90 ... 132 V or 175 ... 246 V
Mains frequency	47 ... 63 Hz
Weight	3.5 kg
Humidity	Non-condensing
Operating temperature	5° C ... 45° C
Storage temperature	-55° C ... 70° C

RECEIVER

Reception	FM / GFSK
Frequency	400.15 ... 406 MHz
IF bandwidth (6 dB)	20 kHz or 300 kHz
Input impedance	50 Ohm
Antenna connector	Lemo EPS.00.240.NTN
Pre-amplifier powered through antenna	
Connector	12 V, 60mA

VAISALA

Your Partner in All Weather

Vaisala Oyj
Helsinki, Finland
Tel. +358 9 894 91
Fax +358 9 894 9227

Vaisala GmbH
Hamburg, Germany
Tel. +49 40 839 030
Fax +49 40 839 03 110

Vaisala Ltd
Birmingham, UK
(Traffic Weather Products only)
Tel. +44 121 683 1200
Fax +44 121 683 1299

Vaisala Ltd
Newmarket, UK
(Upper Air and SurfaceWeather Products only)
Tel. +44 1638 576 200
Fax +44 1638 576 240

Vaisala SA
Paris, France
Tel. +33 1 3057 2728
Fax +33 1 30960858

Vaisala SA
Meyreuil, France
(Thunderstorm Systems only)
Tel. +33 4 42 126464
Fax +33 4 42 126474

Vaisala Inc.
Woburn, MA, USA
Tel. +1 781 933 4500
Fax +1 781 933 8029

Vaisala Inc.
Columbus, OH, USA
(Aviation Weather Systems only)
Tel. +1 614 873 6880
Fax +1 614 873 6890

Vaisala Inc.
Boulder, CO, USA
Tel. +1 303 499 1701
Fax +1 303 499 1767

Vaisala Inc.
Tucson, AZ, USA
(Thunderstorm Systems and Data only)
Tel. +1 520 806 7300
Fax +1 520 741 2848

Vaisala Inc.
Sunnyvale, CA, USA
(Surface Weather Products only)
Tel. +1 408 734 9640
Fax +1 408 734 0655

Vaisala Inc. Regional Office
London, ON, Canada
Tel. +1 519 679 9563
Fax +1 519 679 9992

Vaisala KK
Tokyo, Japan
Tel. +81 3 3266 9611
Fax +81 3 3266 9610

Vaisala Pty Ltd
Hawthorn, Vic., Australia
Tel. +61 3 9818 4200
Fax +61 3 9818 4522

Vaisala Beijing
Representative Office
P.R.China
Tel. +86 10 6522 4041
Fax +86 10 6522 4051

Vaisala Regional Office Malaysia
Kuala Lumpur, Malaysia
Tel. +60 3 2169 7776
Fax +60 3 2169 7775

For more detailed contact information and for other Vaisala locations visit us at: www.vaisala.com

Ref. B210347EN-A

VAISALA

Vaisala Electric Winch TTW111

- **Stainless steel and aluminum construction resists corrosion**
- **Variable speed**
- **Case mounted and hand-held controls for ease of use**
- **Clean, compact design for easy transport**
- **Emergency stop features for safe operation**

RAPID RETRIEVAL

The Vaisala Electric Winch TTW111 enables rapid retrieval of a tethered balloon or kite under heavy wind loading. Speed and winding direction can be operated with either a case mounted or hand-held controller. The high-torque drive train minimizes speed variation under changing loads.

SAFE AND EASY TO USE

Stop switches are provided on both the case-mounted and hand-held controllers. In addition, an emergency stop bar and drum cover switch halt winch operation in the event of an emergency. A level-winding mechanism distributes the tetherline evenly on the drum, assuring smooth line feed and minimizing line abrasion. Drum flange guards prevent line fouling. The electrical circuitry has built-in protection against overload and overheating. A self-braking worm gear drive assures line feed control even during loss of power. In the event of power loss, a manual crank can be used to retrieve the balloon and instrumentation. The compact design of the winch allows for ease of transportation.

RELIABLE AND RUGGED FOR THE LONG-TERM

The Vaisala Electric Winch is constructed of high-quality stainless steel and aluminum for rugged use and long-term reliability. Ceramic guides, stainless steel line guides and a ball-bearing drive train minimize wear. The winch drum and level-wind are driven by a 1 HP, high-torque industrial motor, tooth-belt drive and worm gear transmission.

TECHNICAL INFORMATION

GENERAL

Speed	Variable 0-1.8 m/s (0 - 5.8 ft/s) @ 34 kg (75 lbs) load
Maximum load	34 kg (75 lbs)
Drum capacity	15.2 cm (6 in.) diameter, 14.0 cm (5.5 in.) wide drum with 22.9 cm (9 in.) diameter flange
Drive train	1.0 HP dc motor with 20:1 worm drive
Operating temperature	0ºC (32ºF) to 50ºC (+122ºF)
Power requirements	95-240 Vac, 50/60 Hz, 10 A max.

MAXIMUM LINE LENGTHS

3 km (10,000 ft) with 110 kg (240 lbs) test line

2 km (7,000 ft) with 165 kg (360 lbs) test line

DIMENSIONS

Including handles and skids	
Width	55.9 cm (22 in.)
Depth	46.5 cm (18.3 in.)
Height	47.5 cm (18.7 in.)
Weight	48.6 kg (107 lbs)

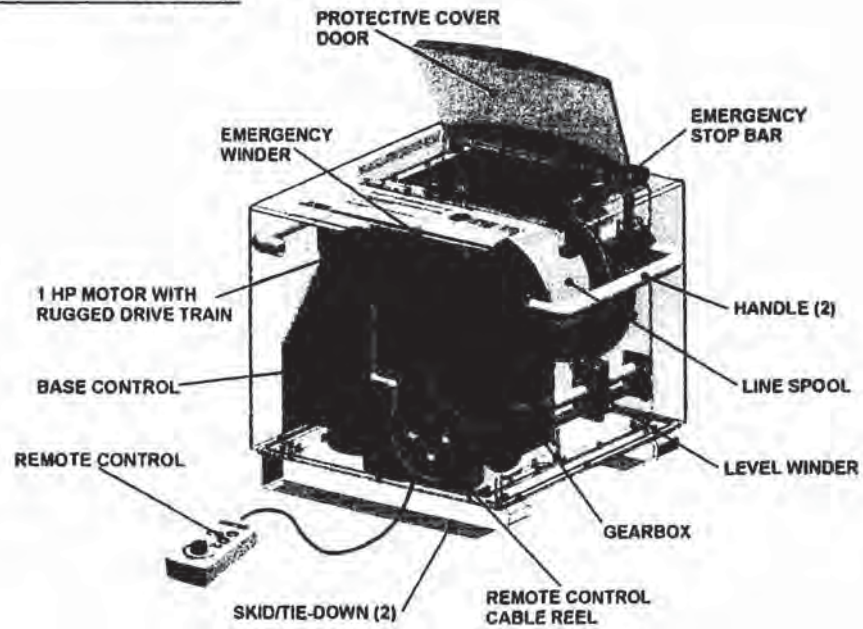

VAISALA

Your Partner in All Weather

Vaisala Oyj
Helsinki, Finland
Tel. +358 9 894 91
Fax +358 9 894 9227

Vaisala GmbH
Hamburg, Germany
Tel. +49 40 839 030
Fax +49 40 839 03 110

Vaisala Ltd
Birmingham, UK
(Traffic Weather Products only)
Tel. +44 121 683 1200
Fax +44 121 683 1299

Vaisala Ltd
Newmarket, UK
(Upper Air and SurfaceWeather Products only)
Tel. +44 1638 576 200
Fax +44 1638 576 240

Vaisala SA
Paris, France
Tel. +33 1 30 57 2728
Fax +33 1 30 96 0858

Vaisala SA
Meyreuil, France
(Thunderstorm Systems only)
Tel. +33 4 42 12 6464
Fax +33 4 42 12 6474

Vaisala Inc.
Woburn, MA, USA
Tel. +1 781 933 4500
Fax +1 781 933 8029

Vaisala Inc.
Columbus, OH, USA
(Aviation Weather Systems only)
Tel. +1 614 873 6880
Fax +1 614 873 6890

Vaisala Inc.
Boulder, CO, USA
Tel. +1 303 499 1701
Fax +1 303 499 1767

Vaisala Inc.
Tucson, AZ, USA
(Thunderstorm Systems and Data only)
Tel. +1 520 806 7300
Fax +1 520 741 2848

Vaisala Inc.
Sunnyvale, CA, USA
(Surface Weather Products only)
Tel. +1 408 734 9640
Fax +1 408 734 0655

Vaisala Inc. Regional Office
London, ON, Canada
Tel. +1 519 679 9563
Fax +1 519 679 9992

Vaisala KK
Tokyo, Japan
Tel. +81 3 3266 9611
Fax +81 3 3266 9610

Vaisala Pty Ltd
Hawthorn, Vic., Australia
Tel. +61 3 9818 4200
Fax +61 3 9818 4522

Vaisala Beijing
Representative Office
P.R.China
Tel. +86 10 6522 4041
Fax +86 10 6522 4051

Vaisala Regional Office Malaysia
Kuala Lumpur, Malaysia
Tel. +60 3 2169 7776
Fax +60 3 2169 7775

For more detailed contact information and for other Vaisala locations visit us at: www.vaisala.com

Ref. B210216en-B

VAISALA
www.vaisala.com

Head Office
Vaisala Oyj
P.O. Box 26, FIN-00421 Helsinki
Finland
Tel. +358 9 894 91
Fax +358 9 8949 2227

Europe
Vaisala GmbH
Schnackenburgallee 31 d
D-22525 Hamburg, Germany
Tel. +49 40 839 030
Fax +49 40 839 03 110

Vaisala SA
2, rue Stéphenson (escalier 2bis)
F-78181 Saint-Quentin-en-Yvelines
Cedex, France
Tel. +33 1 3057 2728
Fax +33 1 3096 0858

Vaisala SA
(Thunderstorm Systems only)
Aix-en-Provence Office
7, Europarc Ste Victoire
F-13590 Meyreuil, France
Tel. +33 4 4212 6161
Fax +33 4 4212 6171

Vaisala Ltd
(Traffic Weather Products only)
Birmingham Operations
Vaisala House
349 Bristol Road
Birmingham B5 7SW, UK
Tel. +44 121 683 1200
Fax +44 121 683 1299

Vaisala Ltd
(Upper Air and Surface Weather
Products only)
Newmarket Office
Unit 9, Swan Lane, Exning
Newmarket, Suffolk CB8 7FN, UK
Tel. +44 1638 576 200
Fax +44 1638 576 240

North America
Vaisala Inc.
100 Commerce Way
Woburn, MA 01801-1068, USA
Tel. +1 781 933 4500
Fax +1 781 933 8029

Vaisala Inc.
(Aviation Weather Systems only)
Columbus Operations
7150 Industrial Parkway
Plain City, Ohio 43064-9005, USA
Tel. +1 614 873 6880
Fax +1 614 873 6890

Vaisala Inc.
Boulder Operations
194 South Taylor Avenue
Louisville, CO 80027, USA
Tel. +1 303 499 1701
Fax +1 303 499 1707

Vaisala Inc.
(Surface Weather Products only)
Sunnyvale Office
1288 Reamwood Ave.
Sunnyvale, CA 94089-2233, USA
Tel. +1 408 734 9640
Fax +1 408 734 0655

Vaisala Inc.
(Thunderstorm Systems
and Data only)
Tucson Operations
2705 E. Medina Road
Tucson, AZ 85706, USA
Tel. +1 520 806 7300
Fax +1 520 741 2868

Vaisala Inc.
Regional Office Canada
P.O. Box 2241, Station "B"
London, Ontario N6A 4E3
Canada
Tel. +1 519 679 9563
Fax +1 519 679 9992

Asia and Pacific
Vaisala KK
32 Kagurazaka 6-Chome
Shinjuku-Ku
Tokyo 162-0825, Japan
Tel. +81 3 3266 9611
Fax +81 3 3266 9610

Vaisala Oyj
Beijing Representative Office
Wangfujing Grand Hotel
Room 520
57, Wangfujing Street
Beijing 100006,
People's Republic of China
Tel. +86 10 6522 3050
Fax +86 10 6522 3051

Vaisala Oyj
Regional Office Malaysia
Level 36, Menara Citibank
165 Jalan Ampang
50450 Kuala Lumpur
Malaysia
Tel. +60 3 2169 7776
Fax +60 3 2169 7775

Vaisala Pty Ltd
3 Guest Street
Hawthorn, VIC 3122
Australia
Tel. +61 3 9818 4200
Fax +61 3 9818 4522
ABN 58 006 500 616

Please look for other
Vaisala locations at
www.vaisala.com

CE

Ref. B210268en-A

VAISALA

VaisalaTethered Balloon TTB Series

- **Part of the Vaisala DigiCORA Tethersonde System**
- **Economical and portable – in a rugged canvas carrying case**
- **High payload lift-to-volume ratio**
- **Deployable up to an altitude of 3 km**
- **Highly visible – international orange color**
- **Aerodynamically stable**
- **Optional automatic deflation device**

APPLICATIONS

- Air pollution sensor platform
- Radar target platform
- Boundary layer research

PROVEN RELIABILITY

The Vaisala Tethered Balloon TTB Series is used to provide lift for the Vaisala Tethersonde TTS111 and Tethered Ozonesonde TTO111. From the Arctic to the Antarctic, from the Sahara Desert to tropical rain forests, its reliability has been proven in years of field research.

AUTOMATIC PRESSURE COMPENSATION

The Tethered Balloon automatically compensates for changes in external pressure during normal ascent. It maintains its aerodynamic shape and presents a low drag coefficient at any rated altitude and wind load.The Tethered Balloon will quickly pay for itself in reduced helium or hydrogen use and the associated transportation costs of heavy cylinders.

EXCELLENT PAYLOAD-TO-VOLUME RATIO

The standard Tethered Balloon is made of 3.0 mil urethane film (optionally available in 1.5 mil film). This material has several times the shear and tear strength of standard balloon polyethylene and gives the Tethered Balloon its high lift-to-volume ratio. Its payload-to-volume ratio is about four times that attained with conventional rubberized nylon on dacron material.

EASY TO INFLATE AND DEFLATE

The Tethered Balloon is easy to handle in turbulent launch and recovery situations. The fill valve is mounted in the nose section of the balloon. This allows the operator to inflate and deflate the balloon while controlling the tether point in the prevailing wind – a decided advantage when one person is operating the system in gusty winds. The Vaisala Tethered Balloon TTB Series is aerodynamic and suitable for use in winds of up to 15 m/s.

TECHNICAL INFORMATION

MODEL PAYLOADS AND DIMENSIONS

TTB125 (1.5 mil)	
Length	3.8 m / 12.5 ft
Diameter	1.85 m / 5.75 ft
Payload (sea-level)	2.7 kg / 5.9 lbs
TTB127 (1.5 mil)	
Length	4.4 m / 14.5 ft
Diameter	2.0 m / 6.5 ft
Payload (sea-level)	4.20 kg / 9.2 lbs
TTB325 (3.0 mil)	
Length	3.8 m / 12.5 ft
Diameter	1.85 m / 5.75 ft
Payload (sea-level)	2.2 kg / 4.8 lbs
TTB327 (3.0 mil)	
Length	4.4 m / 14.5 ft
Diameter	2.0 m / 6.5 ft
Payload (sea-level)	3.6 kg / 7.9 lbs
TTB329 (3.0 mil)	
Length	5.2 m / 16.0 ft
Diameter	2.3 m / 7.5 ft
Payload (sea-level)	5.45 kg / 12.0 lbs

Payload specifications listed are at sea level. Payload capacity will diminish as launch site altitude increases. Example: payload lift capacity is approximately 17% less at 1700 meters. Selection of the appropriate Tethered Balloon is dependent on the total payload to be lifted and any regulatory restrictions in the anticipated flight zone. Payload is the combination of Tethersondes (up to six can be flown simultaneously), Ozonesondes, tetherline, and wind drag on the tetherline. To calculate an estimated payload add the following:

- 300 g / Tethersonde deployed
- 600 g / Tethered Ozonesonde deployed
- 0.63 g/m of 240# test line deployed (up to 3000 m) (Diameter of 240# is .65 mm)
- 0.95 g/m of 360# test line deployed (up to 2000 m) (Diameter of 360# test line is 1.25 mm)

Wind drag is a function of the length of line deployed, wind speed, and the condition of the tetherline (old, frayed line will cause more wind drag). We recommend that the user procure at least one size larger to compensate for this effect.

The user is responsible for determining any regulatory restrictions on tethered balloon flights. Should balloon size be restricted, Vaisala offers custom versions of the Tethered Balloon with internal tethers allowing the "stacking" of multiple balloons to achieve greater lift capability. Vaisala's TTD111 Tethered Balloon Automatic Deflation Device is also available for deflating the balloon should it break free of its mooring.

VAISALA
Reliable.

Vaisala Oyj
Helsinki, Finland
Tel +358 9 894 91
Fax +358 9 894 92227

Vaisala GmbH
Hamburg, Germany
Tel +49 40 839 030
Fax +49 40 839 03 110

Vaisala Ltd
Birmingham, UK
(Road Weather Products only)
Tel +44 121 683 1200
Fax +44 121 683 1299

Vaisala Ltd
Newmarket, UK
(Upper Air and Surface Weather Products only)
Tel +44 1638 576 200
Fax +44 1638 576 240

Vaisala SA
Paris, France
Tel +33 1 30 57 27 28
Fax +33 1 30 96 08 58

Vaisala SA
Meyreuil, France
(Thunderstorm Systems only)
Tel +33 4 42 12 64 64
Fax +33 4 42 12 64 74

Vaisala Inc.
Woburn, MA, USA
Tel +1 781 933 4500
Fax +1 781 933 8029

Vaisala Inc.
Columbus, OH, USA
(Aviation Weather Systems only)
Tel +1 614 873 6880
Fax +1 614 873 6890

Vaisala Inc.
Boulder, CO, USA
Tel +1 303 499 1701
Fax +1 303 499 1767

Vaisala Inc.
Tucson, AZ, USA
(Thunderstorm Systems and Data only)
Tel +1 520 806 7300
Fax +1 520 741 2848

Vaisala Inc.
Sunnyvale, CA, USA
(Surface Weather Products only)
Tel +1 408 734 9640
Fax +1 408 734 0655

Vaisala Inc. Regional Office
London, ON, Canada
Tel +1 519 679 9563
Fax +1 519 679 9992

Vaisala KK
Tokyo, Japan
Tel +81 3 3266 9611
Fax +81 3 3266 9610

Vaisala Pty Ltd
Hawthorn, Vic., Australia
Tel +61 3 9818 4200
Fax +61 3 9818 4522

Vaisala Beijing
Representative Office
P.R.China
Tel +86 10 8526 1199
Fax +86 10 8526 1155

Vaisala Regional Office Malaysia
Kuala Lumpur, Malaysia
Tel +60 3 2169 7776
Fax +60 3 2169 7775

For more detailed contact information and for other Vaisala locations visit us at: www.vaisala.com

All specifications subject to change without notice.

Ref. B210348EN-B

CE

TECHNICAL INFORMATION

TEMPERATURE
F-THERMOCAP® CAPACITIVE WIRE

Measuring range	-50 ... +60 °C
Resolution	0.1 °C
Response time **	0.2 s
Repeatability of calibration *	0.15 °C
Uncertainty in sounding ***	0.5 °C
Reproducibility in sounding ****	0.2 °C

HUMIDITY
H-HUMICAP® THIN FILM CAPACITOR

Measuring range	0 ... 100 %RH
Resolution	0.1 %RH
Response time @ +20°C **	< 0.5 s
Repeatability of calibration *	2% RH
Uncertainty in sounding ***	5% RH
Reproducibility in sounding ****	3% RH

PRESSURE
BAROCAP® SILICON SENSOR

Measuring range	500 ... 1080 hPa
Resolution	0.1 hPa
Repeatability of calibration *	0.4 hPa
Uncertainty in sounding ***	1.5 hPa
Reproducibility in sounding ****	0.5 hPa

WIND SPEED
3-CUP ANEMOMETER

Measuring range	0 ...20 m/s
Resolution	0.1 m/s

WIND DIRECTION
DIGITAL COMPASS

Measuring range	0 ...360°
Resolution	1°

ANALOG TO DIGITAL CHANNELS

Measuring range	0 ...2.000 VDC
Resolution	0.001 VDC

OZONE CHANNELS

Current measuring range	0 ...10.000 µA
Current resolution	0.003 µA
Temperature measuring range	0 ... +40 °C
Temperature resolution	0.1 °C

TRANSMITTER

Modulation	GFSK
Frequency	400...406 MHz
Adjustable frequency steps	10 kHz
Bandwidth	< 20 kHz
Power	+12 dBm (nominal) or 16 mW

GENERAL

Dimensions	approx. 145 cm x 32 cm x 32 cm
Power source	9 V battery
Power consumption	100 mA
Weight incl. sensors and internal battery	300 g
Operating temperature	0 ... +50 °C
Storage conditions:	RH <85%, 5 ... +40 °C

* Standard deviation of differences between two successive repeated calibrations, k = 2 confidence level

** Step response to 63.2 % @ 6m/s flow @ 1000hPa

*** 2-sigma (95,5 %) confidence level (k=2), cumulative uncertainty including repeatability, long-term stability, effects due to measuring conditions, dynamic effects (such as response time) and effects due to measurement electronics

**** standard deviation of differences, in twin soundings divided by 2

Vaisala reserves the right to change the specifications without prior notice.

VAISALA

Your Partner in All Weather

Vaisala Oyj
Helsinki, Finland
Tel. +358 9 894 91
Fax +358 9 894 9227

Vaisala GmbH
Hamburg, Germany
Tel. +49 40 839 030
Fax +49 40 839 03 110

Vaisala Ltd
Birmingham, UK
(Traffic Weather Products only)
Tel. +44 121 683 1200
Fax +44 121 683 1299

Vaisala Ltd
Newmarket, UK
(Upper Air and SurfaceWeather Products only)
Tel. +44 1638 576 200
Fax +44 1638 576 240

Vaisala SA
Paris, France
Tel. +33 1 30 57 27 28
Fax +33 1 30 96 08 58

Vaisala SA
Meyreuil, France
(Thunderstorm Systems only)
Tel. +33 4 42 12 64 64
Fax +33 4 42 12 64 74

Vaisala Inc.
Woburn, MA, USA
Tel. +1 781 933 4500
Fax +1 781 933 8029

Vaisala Inc.
Columbus, OH, USA
(Aviation Weather Systems only)
Tel. +1 614 873 6880
Fax +1 614 873 6890

Vaisala Inc.
Boulder, CO, USA
Tel. +1 303 499 1701
Fax +1 303 499 1767

Vaisala Inc.
Tucson, AZ, USA
(Thunderstorm Systems and Data only)
Tel. +1 520 806 7300
Fax +1 520 741 2848

Vaisala Inc.
Sunnyvale, CA, USA
(Surface Weather Products only)
Tel. +1 408 734 9640
Fax +1 408 734 0655

Vaisala Inc. Regional Office
London, ON, Canada
Tel. +1 519 679 9563
Fax +1 519 679 9992

Vaisala KK
Tokyo, Japan
Tel. +81 3 3266 9611
Fax +81 3 3266 9610

Vaisala Pty Ltd
Hawthorn, Vic , Australia
Tel. +61 3 9818 4200
Fax +61 3 9818 4522

Vaisala Beijing
Representative Office
P.R.China
Tel. +86 10 65224041
Fax +86 10 65224051

Vaisala Regional Office Malaysia
Kuala Lumpur, Malaysia
Tel. +60 3 2169 7776
Fax +60 3 2169 7775

For more detailed contact information and for other Vaisala locations visit us at: www.vaisala.com

Ref. B210350EN-A

Preliminary Quotation

UPPER AIR MEASUREMENT SYSTEM

A Versatile, Professional Weather Station Designed for Ease of Use and Portability.

Coastal Environmental Systems, Inc.
820 First Avenue South ♦ Seattle, Washington 98134
www.CoastalEnvironmental.com

Quotation Number: KP - 123 *Rev.Date:* June 6, 2005 *PRICES GUARANTEED FOR ONE YEAR*

PREPARED FOR:
Roger Denick
Burgess & Niple
5085 Reed Road
Columbus, OH 43220
RDenick@burnip.com

PREPARED BY:
Kelly Paletta, Products Manager
800-488-8291 x170
kpaletta@CoastalEnvironmental.com

TERMS: Net 30 (OAC)
STANDARD DELIVERY: 30 - 60 Days ARO
SHIPPING: Prepaid/Add, FOB Seattle, WA

Weather Station. Data (0001)

PART NO.	DESCRIPTION		Commercial Price	Net Price
SR2K2	Ground Station: Base Station • Receiving Station • Ground Check/Calibration Station • GPS Antenna • GPS Repeater Antenna • *LAPTOP PC and associated software* *This system reports wind speed and direction, air temperature, relative humidity and barometric pressure.*		45,720.00	**41,148.00**
M2K2	GPSonde: Radiosonde	Each, (Qty 1-500)	181.12	**172.06**
		(Qty 501-1200)	174.00	**165.29**

Portable upper-air sounding system

SR2K2 P

Distinctive feature of the SR2K2-P ground station consists in its integration into a small and robust suit case. The system is operated through a laptop which can be placed inside the case too, greatly facilitating transportation from one site to another.

Functionalities

Processing of raw data

Reference GPS station for differential calculation

Data archiving on hard disk or any digital support

Real time Data display
Listing and/or graphical

Sonde programming interface

GPS repeater for indoor initialization

Ground check system for T and U sensors

Editing of WMO code messages

Data transmission through Ethernet network

Laptop PC with Windows 2000 OS

Auto-tests with diagnostic display facilitating the maintenance

Omni directional antennas
easy handling and installation

Portability

Light and robust case

Dimensions 500 x 395 x 185

Weight: 9 kg

Transportation tube for 403 MHz antenna

Power supply : AC-110/220V – DC-24V

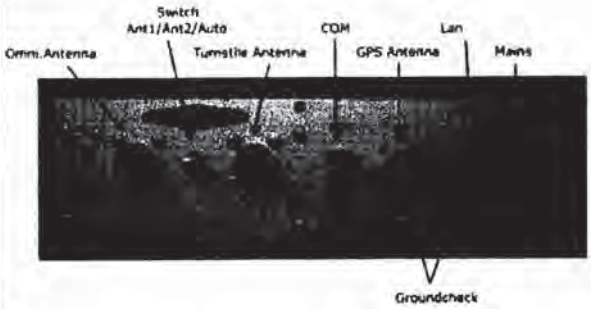

SR2K2-P – Side view – Connector panel

MODEM – Z.A de l'orme à bonnet – 91750 CHEVANNES - France
Tél : (33) **1.64.99.77.52** - **Fax** : (33) **1.64.99.77.53**
Http //www.meteomodem.com

SR2K2-P UPPER-AIR SOUNDING SYSTEM DIAGRAM

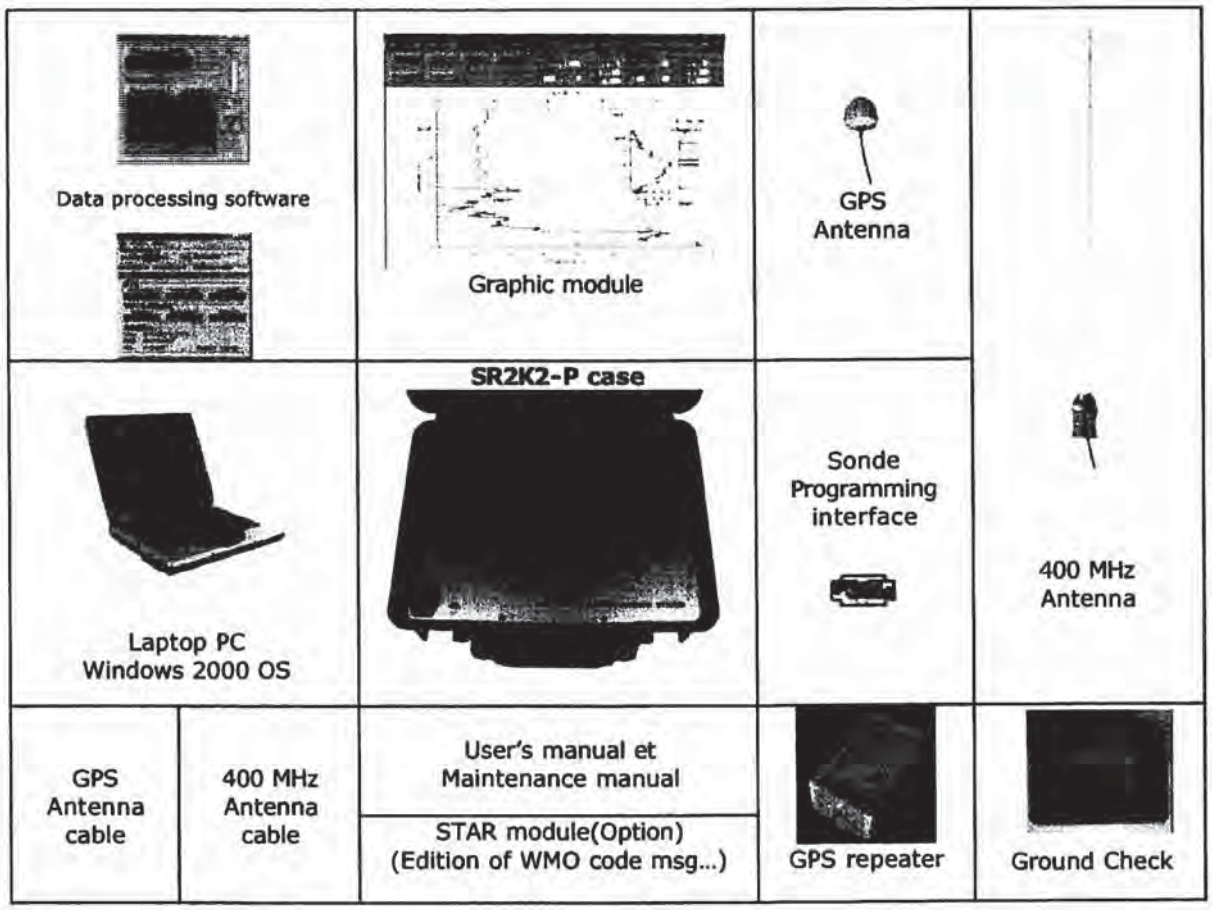

SR2K2-P TECHNICAL SPECIFICATIONS

GENERAL

Dimensions	: 500 mm – 395 mm – 185 mm
Weight	: 9 kg
Power drain	
12V-DC	: 4 W
110/220V-AC	: 10 VA
Output interfacing	: Standard USB port
Sonde prog. interface	: cable with connector
GPS receiver	: 12 channels
Workstation	: laptop PC
Compatibility	: GPSonde GL98 and M2K2

TELEMETRY

Receiver	: 400–406 MHz digital synthesizer
Range	: 250 Km
Modulation	: PSK

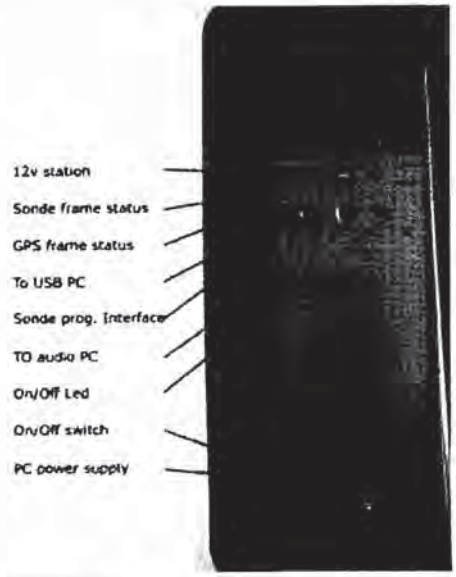

MODEM – Z.A de l'orme à bonnet – 91750 CHEVANNES - France
Tél : (33) **1.64.99.77.52** - **Fax** : (33) **1.64.99.77.53**
Http //www.meteomodem.com

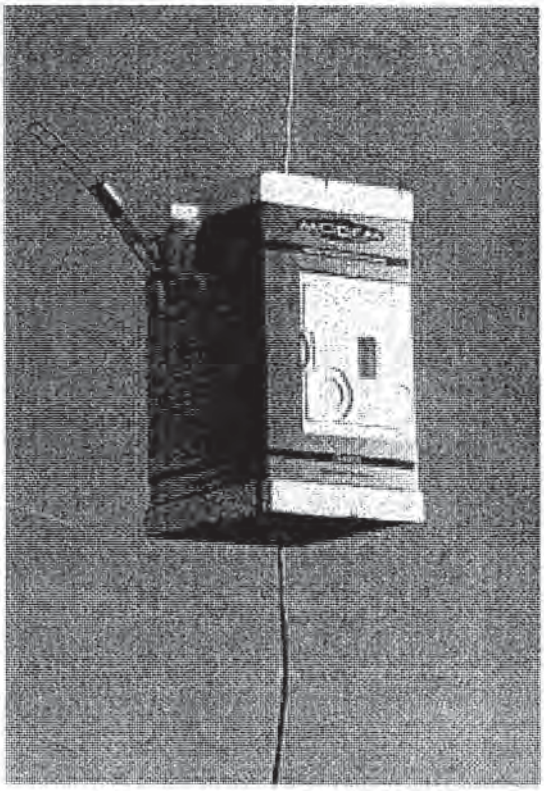

GPSonde M2K2

Issued from the former GPSonde GL98, the new M2K2 is totally compatible with all MODEM ground stations.

The new design brings the following improvements :

- Size and weight
- General Performance
- Electronic integration
- Microprocessor capability
- Additional entries for others sensors
- New generation GPS board
- Humidity and temperature accuracy
- Energy consumption
- Transmitter in full compliance with recommendations of the European ETSI EN302054 standard

Main Features

FULLY-CODED NEW GENERATION GPS
BETTER ACCURACY AND INITIALISATION TIME

PRESSURE DERIVED FROM GPS ALTITUDE WITH TEMPERATURE AND HUMIDITY PARAMETER CORRECTION
(LAPLACE LAW)

SENSORS CALIBRATION STORED ON EEPROM

GROUND CHECK FACILITY WITH BUILT-IN GPS REPEATER FOR INDOOR INITIALIZATION

400 TO 406 MHZ DIGITAL SYNTHESISER
NARROW BANDWIDTH
EN302054 STANDARD COMPLIANCE

200 KHZ STEP FREQUENCY SETTING

DIGITAL TRANSMISSION IN 1 SEC CYCLES

LOW ENERGY CONSUMPTION

BATTERIES LIFE > 3 HOURS

3-YEAR SELF LIFE

NEW HIGH PERFORMANCE
RE-PROGRAMMABLE MICROPROCESSOR

MICROPROCESSOR ALLOWS 3 MORE POSSIBILITIES TO CONNECT ADDITIONNAL SENSORS (OZONE, METHANE...)
NO NEED OF INTERFACE BOARD

BETTER TEMPERATURE ACCURACY THANKS TO NEW MICROPROCESSOR (12 BIT)

SENSOR BOOM NEW DESIGN ALLOWS A BETTER RESPONSE TIME AND DUCTILITY OF HUMIDITY SENSOR

POSSIBILITY TO BE DELIVERED WITHOUT GPS
(RADAR TRACKING)

MODEM Z.A de l'orme à bonnet 91750 CHEVANNES
Tél (33) 1.64.99.77.52 - Fax (33) 1.64.99.77.53
Http //www meteomodem.com

SUMMARY OF TECHNICAL SPECIFICATIONS

GPSonde M2K2 RADIOSONDE:

GENERAL

Dimensions	: 92 x 107 x 160 mm
Weight	210 g (including batteries)

TEMPERATURE

Sensor type	: Thermistor
Measurement range	: +55° to –90°
Resolution	: 0.1°C
Absolute accuracy	: +/- 0.5°C
Response time	: <2s
Measurement rate	: 1 Hz
Calibration adjustment	: Calibration prior launch
Factory calibration	: Stored in EPROM

PRESSURE

Range	: 1050 to 3 hPa
Accuracy	: ±2 hPa at 1050 hPa; ±0.5 hPa at 10 hPa
Resolution	: 1 hPa at 1050 hPa; 0.1 hPa at 20hPa

WIND MEASUREMENT

General	: DGPS with C/A code altitude
Altitude Range	: Unlimited with authorisation
Position accuracy	: 10 m
Horizontal Wind accuracy	: 0.15 m/s
Wind direction accuracy	: 2 °
Position resolution	: 0.01 m
Horizontal wind resolution	: 0.01 m/s
Wind direction resolution	: 0.1 °
Measurement rate	: 1 Hz

BATTERIES

Technology	: 1.5V Alkaline
Autonomy	: >3 h
Package	: 4-battery pack

HUMIDITY

Sensor type	: Capacitor
Measurement range	: 0% to 100%
Resolution	: 1%
Absolute accuracy	: +/-5%
Response time	: <2s
Measurement rate	: 1 Hz
Calibration adjustment	: Calibration prior launch
Factory calibration	: Stored in EPROM

TRANSMITTER

Frequency range	: 400 to 406 MHz
Frequency step	: 200 KHz
Frequency setting	: Programming interface
Maximum drift	: +/- 2 KHz
Output Power	: 300 mW
Modulation type	: Digital PSK 4800 bauds

CALIBRATION

Factory calibration	: Stored on EPROM
Ground Check	: Prior launch

SR2K2 GROUND STATION

GENERAL

Dimensions	: Half 19'' unit - Width: 235 mm – Depth: 310 mm – Height: 132 mm
Weight	: 3.5 kg
Consumption	: 15 W
Output	: 2 serial links (connection to PC)
Programming interface	: Front panel connector with cable
GPS	: 12-channel receiver
Workstation	: SR2K2 can be operated from a laptop or desktop computer

TELEMETRY

Built-in receiver	: 400 – 406 MHz digital Synthesiser
Tracking range	: 250 Km
Modulation	: PSK

MODEM – Z A de l'orme à bonnet 91750 CHEVANNES
Tél : (33) 1.64.99.77.52 - Fax (33) 1.64.99.77.53
http //www meteomodem com

BACKGROUND AIR POLLUTION MONITORING STATION

AIR INSTRUMENTS & MEASUREMENTS, LLC

[mailing] **PMB 391, 3579 E. Foothill Blvd, Pasadena CA 91107, USA** aimanalysis@earthlink.net
[physical] **2275 E. Foothill Blvd, Pasadena, CA, 91107, USA** http://www.aimanalysis.com

From the Desk of Harry C. Lord, Direct Tel: (626) 791-1912, Direct Fax: (626) 791-2739

QUOTATION NO: AQ 05- 5344
DATE: May 31, 2005
PREPARED FOR: Roger Denick, Burgess & Nipple
REF: Your telephone Call
APPLICATION: Ambient Air Monitoring

Thank you for the opportunity to submit this proposal.

Item	Qty	P/N	Description	Price
1	1	8506	AIM Patented & Proven Open-Path Analyzer(*), to monitor SO2, O3, NO, NO2 (summed as NOx) & SPM at ppb levels, using dispersive UV spectroscopy and DOAS signal processing With integral projection optics (double-pass), over 5 to 25m, to a reflector assembly, and back including in-line flow-through calibration cell, Laser pointer alignment device, and Protective sunshade Under control of the embedded PC	$37,500

(*) The AIM open-path design has NOTHING in contact with the sample, eliminating the possibilities of corrosion, absorption, or other reactions from the potentially highly corrosive flue gas stream. This design is proven in over 1000 compliance monitoring installations Worldwide.

2	1	1850	Display PC for both systems, with 4-20ma outputs, Relays for fault alarms and system controls, Display of concentration and alarms system set-up, data logging, Optional Remote (modem) communications [PC Anywhere].	$ 2,995
3.	1	1670	Wireless output to points up to 20 mi away, with high gain antenna and 115 kbps data rate	$1,495
Optional:				
4.	1	1849	Local display and keypad	$ 650
5	1	8302	AIM Patented & Proven Open-Path Analyzer(*), to monitor CO and HC at ppm levels using NDIR spectroscopy With integral projection optics (double-pass) over 5 to 15m, to a reflector assembly, and back including in-line flow-through calibration cell, Laser pointer alignment device, and Protective sunshade Under control of an embedded PC	$23,995

6	2	TriP	Tripods for field erection of the telescope and retroreflector assemblies	$1250 each
7	1		One trip, up to 5 man-days on site, installation start-up supervision, & operator training [including all expenses]	.....$6,000
			Additional days, (Plus living expenses at cost)	.....$350/day

In addition or alternately, AIM agrees to provide up to one week training at our plant at time of final system check-out, at no charge; with the trainees responsible for their own travel and living expenses.

6 1 Recommended Spare Parts for 2 & 5 Years Operation of 8500 Series:

Item	P/N	Description	Unit Price	2yr	5yr	
Consumables For each system....						
1.1	5974	UV Source	$ 795.00	2	5	per system
For up to 10 systems						
1.2	1562	D2D12 SSR	$ 240.00	2	4	
1.3	1879	D1712 DIGITAL I/O	$ 750.00	1	1	
1.4	5710	ASSY, SENSOR P.S.	810.00	1	1	
1.5	1880	COM2-PDI RS422/485, 2 CH	$ 665.00	1	1	
1.6	2243	T.E. COOLER	$1,240.00	1	1	

7 1 Recommended Spare Parts for Add-on of 8300 Series

No additional spares recommended.

Quotation firm for 60 days *For any questions regarding this quotation, please call AIM at 626-791-1912*
Terms: see below (*) *or E-mail: aimanalysis@earthlink.net*
Delivery: typ 75 days, [≤ 90 days] after receipt of L/C or order deposit
FOB/FCA: Pasadena (LA), CA *Standard warranty applies [12 mos after installation; or 18 mos after shipment]*

(*) terms (Standard) – for International Delivery [if delivery to US, consult factory for alternate terms]

Either (a) Confirmed Irrevocable Letter of Credit payable at sight, drawn on a Los Angeles bank, partial shipments allowed; or (b) 50% with Order Placement, Balance payable prior to shipment; or (c.) for an additional financing fee of 8 % of the project pricing, AIM can offer US Ex/Im Bank Financing, with FCIA insurance, with payments delayed up to 90days after shipment.

Wire-Transfer Banking Details: Air Instruments & Measurements, LLC
Account No. 100 003880; Bank Routing (ABA) No: 122237748
Bank: Western State Bank, 1801 Huntington Dr, Duarte, CA 91010
Tel: (626) 357-9611; Fax: (626) 358-9613

AIM Model 8500

AIR INSTRUMENTS & MEASUREMENTS, LLC

DUV Open-Path Gas Analyzer, for Ambient Air Monitoring

MEASURING any or all:
NO, NO_2, NH_3, $HONO$, O_3, H_2O_2, SO_2, SO_3, Cl_2, ClO_2, BTX, and others

The AIM Model 8500 open-path analyzer incorporates the most advanced technology available, and is derived from AIM's popular 5000 Series EPA compliant analyzers.

The Model 8500 employs DOAS (differential optical absorption spectroscopy), with a patented PLS pattern recognition processing of the dispersive UV spectral signature, with digital signal processing and communications. Outputs include 4-20 MA analog, Programmable digital outputs, and modem interface [optional]

The Model 8500 is available as a high resolution limited wavelength range analyzer, or low resolution broad wavelength range, or the combination of the two. The high sensitivity achieved with UV spectroscopy allows measurements typically from ppb to ppm levels, and optical pathlengths of 10's to 100's of meters.

The Model 8500 was developed from more than 30 years of practical field in-situ, open-path ansd remote sensing IR and UV experience, in over 4,000 installations in 35 countries.

FEATURES

- ***Open-Path*** - No sample contact
- ***Fast Response Time*** - Fraction of a second – allows prompt detection, analysis and adjustments/warnings.
- ***High Sensitivity*** - Accurate measurements from ppb level concentrations and higher.
- ***High Precision*** - $\leq$ 1 % of Range
- ***High Accuracy*** - $\leq$ 1% of Range
- ***Low Drift*** - $\leq$ 1% of Range over 24 hours [zero and span]
- ***EPA Compliant*** - With an in-line internal calibration cell for manual or automatic cylinder gas calibrations.
- ***Reliable Design*** -The Model 8500 Analyzer features a simple, low-maintenance, rugged design. The dispersive system with a 2048 array detector and no moving parts, and the PC based signal processing insure long-term trouble-free operation.

Air Instruments & Measurements, LLC
PMB 391 3579 E. Foothill Blvd, Pasadena, CA 91107 USA
(626) 791-1912 Fax: (626) 791-2739

URL: http://www.aimanalysis.com
e-mail: sales@aimanalysis.com

Bulletin 8500A 5/02

MODEL 8500 DISPERSIVE UV ANALYZER

Principle of operation: UV absorption spectroscopy; pattern recognition Differential Absorption Optical Spectroscopy [DAOS]

Sampling Technique: The Sample is measured in place in the Ambient air

Analysis and Spectral Ranges: The Model 8500 UV absorption analyzer takes a complete spectra over the range selected, typically from below 200 nm to above 450 nm

Ambient temperature: 32°F to 105°F (0°C to 40°C) standard; (Extended range available with temperature control)

Power: 115 V ±10%, 10 amp, 50/60 Hz; 230 V ±10%, 5 amp, 50/60 Hz

INTRODUCTION to DOAS

DOAS stands for *Differential Optical Absorption Spectroscopy*, a name first applied in Europe in the 1980's, but an analytical technique that has been used in laboratories for at least 50 years. Its primary benefits are the ability to quantitatively and simultaneously measure many different analytes within a sample with low detection limits. AIM applies this in our Models 5600, 8647A and 9050.

In the AIM systems, a dispersive spectrometer captures a spectra of the sample or standard being analyzed. [A spectra is the recording of the absorption strength as a function of wavelength.] Absorption spectroscopy follows very well-known and predictable rules. If two analytes both absorb at the same wavelength, for example, the resulting absorption will be the sum of the two individual absorptions. *Therefore it is possible to mathematically treat the signal produced, to eliminate interferences, and to produce the spectrum for each analyte being sought.* The ability to differentiate between adjacent absorption features is improved with increased system resolution. In addition, modern pattern recognition signal processing techniques [such as AIM's proprietary PLS SVD software] allow the analysis of such low concentrations that no recognizable patterns are apparent when inspecting the spectra.

Standards Preparation - The first step is to record (or otherwise obtain) spectra for the specific analytes being sought, as well as the other analytes that might be present, at the same set of system operating parameters [i.e. resolution, etc] over a range of concentrations above and below the levels anticipated or sought in the samples. These spectra are stored in memory.

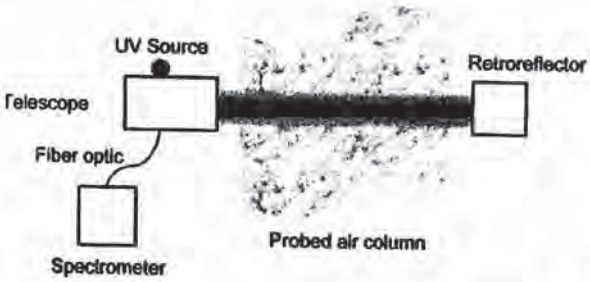

System Optical Set-Up - The analytical technique may be best known for its application to *Open-Path monitoring*, typically either single-pass [where the source is located at one end, and the detector at the other] or double-pass [where the source and detector are located at one end, and a reflector is located at the other]; but many other systems and applications exist [AIM applies it to remote sensing, in-situ monitoring and extractive analysis].

Sample Analysis - Modern analyzers allow the capture of a spectrum generally in less than 0.1 sec [most AIM systems capture the data within 10 msec]. Multiple spectra may be collected and added to improve Signal/Noise, and/or individual spectra may be analyzed to record changes as a function of time. Specific pre-selected analytes may be quantified by analyzing their specific absorption features, but also other "unknowns" can be analyzed by searching through a library of absorption spectra. In addition, the spectra can be stored for subsequent analysis for even a broader list of potential sample components.

Spectral Analysis - Since the absorption spectrum is a fundamental physical property, it is possible to compute the concentration of the absorbing gas directly from the measured spectra, without "calibrating" the analyzer each time with known concentrations of reference gases. This significantly reduces the time and cost of the analysis. However AIM does recommend the periodic introduction of cal gases as an independent verification of the credibility of the data.

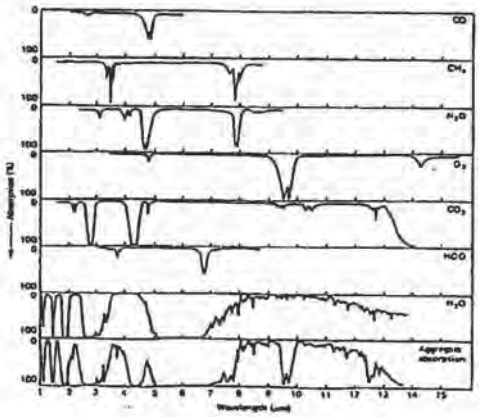

AIM Model 8300

AIR INSTRUMENTS & MEASUREMENTS, LLC

NDIR Open-Path Gas Analyzer, for Ambient Air Monitoring

MEASURING any or all:
CO, CO_2, CH_4, HC, N_2O, HCl, Higher levels of NO, SO2 & others

The Model 8300 NDIR analyzer employs GFC (gas filter correlation spectroscopy), as well as dual wavelength ratioing, to insure that the measurements are independent of transmitted light intensities, with digital signal processing and communications. Outputs include 4-20 MA analog, Programmable digital outputs, and modem interface [optional]

The Model 8300 is most typically used for pathlengths of 10 to 50m, which will produce mid to high ppb detection limits for most analytes, but longer pathlengths are available, [Note NO and SO2 are weak absorbers in the IR, so UV should be used for high sensitivity measurements].

H2O and CO2 are known interferences in the IR. AIM avoids them by applying GFC where practical, selecting measurement absorption bands outside of those of the interfering gases, and/or also measuring the interference and subtracting.

The Model 8300 was first introduced as an R&D tool more than 25 years ago, and has been developed from more than 30 years of practical field in-situ, open-path and remote sensing experience, in over 4,000 installations in 35 countries.

FEATURES

- ***Open-Path*** - No sample contact
- ***Fast Response Time*** – Seconds – allows prompt detection, analysis and adjustments/warnings.
- ***High Sensitivity*** - Accurate measurements from ppb level concentrations and higher.
- ***High Precision*** - $\leq$ 1 % of Range
- ***High Accuracy*** - $\leq$ 1% of Range
- ***Low Drift*** - $\leq$ 1% of Range over 24 hours [zero and span]
- ***EPA Compliant*** - With an in-line internal calibration cell for manual or automatic cylinder gas calibrations.
- ***Reliable Design*** -The Model 8300 Analyzer features a simple, low-maintenance, rugged design. The PC based signal processing insure long-term trouble-free operation.

Air Instruments & Measurements, LLC
PMB 391 3579 E. Foothill Blvd, Pasadena, CA 91107 USA
(626) 791-1912 Fax: (626) 791-2739
http://www.aimanalysis.com; aimanalysis@earthlink.net

Bulletin 8300B 7/00

AIR INSTRUMENTS & MEASUREMENTS, INC. Air Instruments & Measurements, LLC
PMB 391, 3579 E. Foothill Blvd, Pasadena, CA 91107 USA 626-791-1912, Fax 626-791-2739
aimanalysis@earthlink.net http://www.aimanalysis.com

Open-Path Ambient Air Analyzers

Ambient air analyzers are often required or desired for environmental compliance monitoring of the surrounding (ambient) air, as well as for greenhouse gas studies. AIM offers several different ambient air analyzers based upon open-path (remote sensing) monitoring, or in special research applications requiring high reproducibility and sensitivity, extractive gas analysis. Only the open-path is discussed here.

Why Open-Path?

AIM has specialized in the development and application of analyzers that offer the highest level of reliability and accuracy. This is accomplished by measuring the sample in place as it exists in the real-world. Many years of experience has shown that collecting a sample [manually or automatically] allows the sample composition to be modified. Absorption on the walls of the collecting hardware, condensation, reaction, etc all can affect the sample integrity. In addition, automated sample collection adds hardware, increasing maintenance and replacement parts requirements. Measurement of the sample in place eliminates both the possibility of the sample composition being changed [and hence affecting accuracy], and also reduces maintenance requirements by eliminating the sampling systems, pumps, filters, valves, etc

What Systems are Available?

Our first open-path analyzer was a multi-component NDIR double-pass analyzer, developed in the late 1980's, our Model 8300 system with the analyzer and retroreflector separated by up to 25m, with the 3" telescope, and distances of 100s of meters up to 1 Km with larger telescopes.

In addition we offer our Model 8500 open-path **DOAS** based dispersive UV [DUV] analyzer, with an 8" telescope and retroreflector array, for high sensitivity single or multi-component ambient air monitoring of NO, SO2, BTX, Cl2, ClO2, NH3, etc and our Model 8647B combination DUV and DIR DOAS analyzer. All systems are designed to be fully EPA compliant.

Short or Long Pathlengths?

There are two primary applications for the Open-Path analyzers. One is for large area or fenceline monitoring. These devices normally have optical pathlengths of hundreds of meters to 1KM or even more. A primary benefit of this long pathlength is that unsophisticated systems can easily provide high sensitivity [since from Beer's Law, absorption of light is proportional to concentration times the optical pathlength], and will provide an averaged value over this distance. But this benefit can easily become a limitation, as it can be radically biased by atmospheric turbulence, scintillation, and/or one or more emission points within the beam trajectory. Therefore AIM developed a new high sensitivity short path ambient air monitor.

The short pathlength high sensitivity ambient air monitor is particularly well suited for urban locations, allowing the direct measurement in place (without sampling) but in a physically limited and

controllable location… typically at physical separations of 5 to 15m (or double-pass optical pathlengths of 10 to 30m).

How is this accomplished? Why don't other companies offer this possibility?

There are at least four ways to obtain high system sensitivity, to measure low ppb ambient air concentrations. Extending the optical pathlength is simply one of them. The other three that AIM applies are:

(a) Averaging multiple measurements – averaging will improve the S/N by the $\sqrt{}$ (# samples). Since the detection limit is generally defined as 2x the noise level, improving S/N (signal to noise) will allow detection of lower concentrations. However the traditional systems employing scanning spectrometers are limited in the number of samples that can be averaged and still provide a reasonable response time. However, the AIM system time for a single measurement is 10 msec, as we employ a 2048 element array detector allowing ALL wavelengths to be collected simultaneously. One hundred scans can be performed in 1 second, and 10,000 scans in 100 seconds (which is less than 2 minutes). (The square root of 10,000 is 100!)

(b) Increased spectrometer resolution – Increasing resolution significantly increases the absorption strength for most gases at atmospheric pressure. However, scanning systems must balance resolution with speed of response. The higher the resolution [where increased resolution means that the wavelength range ($\Delta \lambda$) sampled is smaller], the longer a scanning system takes to scan the range of wavelengths to be sampled. The AIM system does NOT scan, and hence can increase the resolution as much as is desired, and in fact could theoretically use all 2048 detector elements to ONLY measure the gas of interest [such as BTX or benzaldehyde or ClO2, etc].

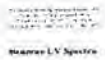

Normal Resolution

An example of high resolution is displayed here.

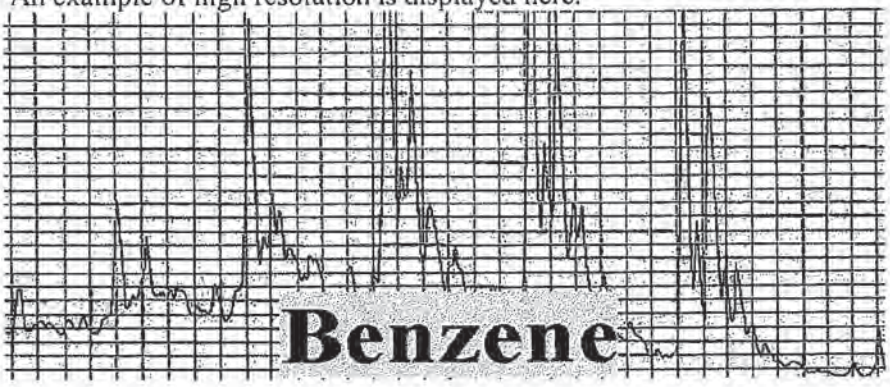

(c) sample a different wavelength with a stronger absorption coefficient …as we see in fact each of the major lobes of the benzene spectra is actually several different absorption lines being averaged together. The higher resolution allows the separation and measurement of each of these lines. AIM locks onto this entire high resolution spectra and applies DOAS signal processing for its measurement.

Introduction to DOAS

DOAS stands for *Differential Optical Absorption Spectroscopy*. This name was first applied in Europe in the 1980's, but the analytical technique has been used in laboratories for at least 50 years. Its primary benefits are the ability to quantitatively and simultaneously measure many different analytes within a sample with low detection limits.

A device is used to capture a spectra of the sample or standard being analyzed. [A spectra is the recording of the absorption strength as a function of wavelength]. Typical devices are dispersive spectrometers or fourier transform spectrometers, for recording spectra in the UV, visible and/or IR. Alternately a tunable laser-based system might be applied. In addition, today, a PC is generally used for its high-speed processing as well as its data storage capabilities.

Absorption spectroscopy follows very well-known and predictable rules. If two analytes both absorb at the same wavelength, for example, the resulting absorption will be the sum of the two individual absorptions. *Therefore it is possible to mathematically treat the signal produced, to eliminate interferences, and to produce the spectrum for each analyte being sought.* The ability to differentiate between adjacent absorption features is improved with increased system resolution. In addition, modern pattern recognition signal processing techniques allow the analysis of such low concentrations that no recognizable patterns are apparent when visually inspecting the spectra.

Standards Preparation - The first step is to record (or otherwise obtain) spectra for the specific analytes being sought, as well as the other analytes that might be present, at the same set of system operating parameters [i.e. resolution, etc] over a range of concentrations above and below the levels anticipated or sought in the samples. These spectra are stored in memory.

System Optical Set-Up - The analytical technique is best known for its application to *Open-Path monitoring*, typically either single-pass [where the source is located at one end, and the detector at the other] or double-pass [where the source and detector are located at one end, and a reflector is located at the other]; but other systems exist [for example the AIM SCAQMD remote vehicle exhaust analyzer is a DOAS system with an eight-pass open-path optical projection system].

Alternately the sample may be brought into a sample cell, and measured in place in the cell.

Sample Analysis - Modern analyzers allow the capture of a spectrum generally in less than a second. Multiple spectra may be collected and added to improve Signal/Noise, and/or individual spectra may be analyzed to record changes as a function of time. Specific pre-selected analytes may be quantified by analyzing their specific absorption features, but also other "unknowns" can be analyzed by searching through a library of absorption spectra. In addition, the spectra can be stored for subsequent analysis for even a broader list of potential sample components.

Spectral Analysis - Since the absorption spectrum is a fundamental physical property, it is possible to compute the concentration of the absorbing gas directly from the measured spectra, without "calibrating" the analyzer each time with known concentrations of reference gases. This significantly reduces the time and cost of the analysis. However AIM does recommend the periodic introduction of cal gases as an independent verification of the credibility of the data.

AIR INSTRUMENTS & MEASUREMENTS, INC. Air Instruments & Measurements, LLC
PMB 391, 3579 E. Foothill Blvd, Pasadena, CA 91107 USA 626-791-1912 Fax 626-791-2739
aimanalysis@earthlink.net http://www.aimanalysis.com

UV References

AIM's dispersive UV was first developed 10 years ago. The Model 5000 is the extractive version, Model 5600 is the in-situ open-path stack gas analyzer, Model 8500 is the open-path ambient air monitor and the 9050 series is the probe version of the stack gas analyzer. They have been sold to hundreds of installations and licensed to international partners. Selected references are attached.

The 8500 open-path ambient air monitor is a unique design. It has resulted from many years experience with open-path monitoring in stacks and across-the road (for vehicle exhaust monitoring).

Our current UV customers include:

One system.... Ric Opp ,
Ponderay Newsprint Co
422767 Highway 20
Usk, WA 99109-9771,
E-Mail Address:opprl@bowater.com
Tel: (509) 445-2123; Fax: (509) 445-1233

One system... Shang Hua, Chief Engineer
Wuzhong Instrument Co. Ltd
67 Chao Yang St, Litong District
Wuzhong City, Ningxia 751100, China
[86] 0953 392 9069 Fax: [86] 0953 392-9110
WZ.SH@163.com

One system.... Jorson [Jung-Chang] Lai
No. 4, Zen-Yi St.,
Fong-Shan City, 830, Taiwan
E-Mail Address: jorson@ms12.hinet.net
Tel: [886] 7 -740-3245; Fax: [886] 7-740-1693

And three systems... Wang Chong
TINA Instrumentation Inc
Beijing, China

AIR INSTRUMENTS & MEASUREMENTS, LLC
PMB 391 3579 E. Foothill Blvd, Pasadena, CA 91107 USA 626-791-1912 Fax: 626-791-2739
e-mail: aimanalysis@ earthlink.net WWW ... http://www.aimanalysis.com

INTRODUCTION to DOAS

DOAS stands for *Differential Optical Absorption Spectroscopy*, a name first applied in Europe in the 1980's, but an analytical technique that has been used in laboratories for at least 50 years. Its primary benefits are the ability to quantitatively and simultaneously measure many different analytes within a sample with low detection limits. AIM applies this in our Models 5600, 8647A and 9050.

In the AIM systems, a dispersive spectrometer captures a spectra of the sample or standard being analyzed. [A spectra is the recording of the absorption strength as a function of wavelength.] Absorption spectroscopy follows very well-known and predictable rules. If two analytes both absorb at the same wavelength, for example, the resulting absorption will be the sum of the two individual absorptions. *Therefore it is possible to mathematically treat the signal produced, to eliminate interferences, and to produce the spectrum for each analyte being sought.* The ability to differentiate between adjacent absorption features is improved with increased system resolution. In addition, modern pattern recognition signal processing techniques [such as AIM's proprietary PLS SVD software] allow the analysis of such low concentrations that no recognizable patterns are apparent when inspecting the spectra.

Standards Preparation - The first step is to record (or otherwise obtain) spectra for the specific analytes being sought, as well as the other analytes that might be present, at the same set of system operating parameters [i.e. resolution, etc] over a range of concentrations above and below the levels anticipated or sought in the samples. These spectra are stored in memory.

System Optical Set-Up - The analytical technique may be best known for its application to *Open-Path monitoring*, typically either single-pass [where the source is located at one end, and the detector at the other] or double-pass [where the source and detector are located at one end, and a reflector is located at the other]; but many other systems and applications exist [AIM applies it to remote sesning, in-situ monitoring and extractive analysis].

Sample Analysis - Modern analyzers allow the capture of a spectrum generally in less than 0.1 sec [most AIM systems capture the data within 10 msec]. Multiple spectra may be collected and added to improve Signal/Noise, and/or individual spectra may be analyzed to record changes as a function of time. Specific pre-selected analytes may be quantified by analyzing their specific absorption features, but also other "unknowns" can be analyzed by searching through a library of absorption spectra. In addition, the spectra can be stored for subsequent analysis for even a broader list of potential sample components.

Spectral Analysis - Since the absorption spectrum is a fundamental physical property, it is possible to compute the concentration of the absorbing gas directly from the measured spectra, without "calibrating" the analyzer each time with known concentrations of reference gases. This significantly reduces the time and cost of the analysis. However AIM does recommend the periodic introduction of cal gases as an independent verification of the credibility of the data.

Signal Processing Strategy

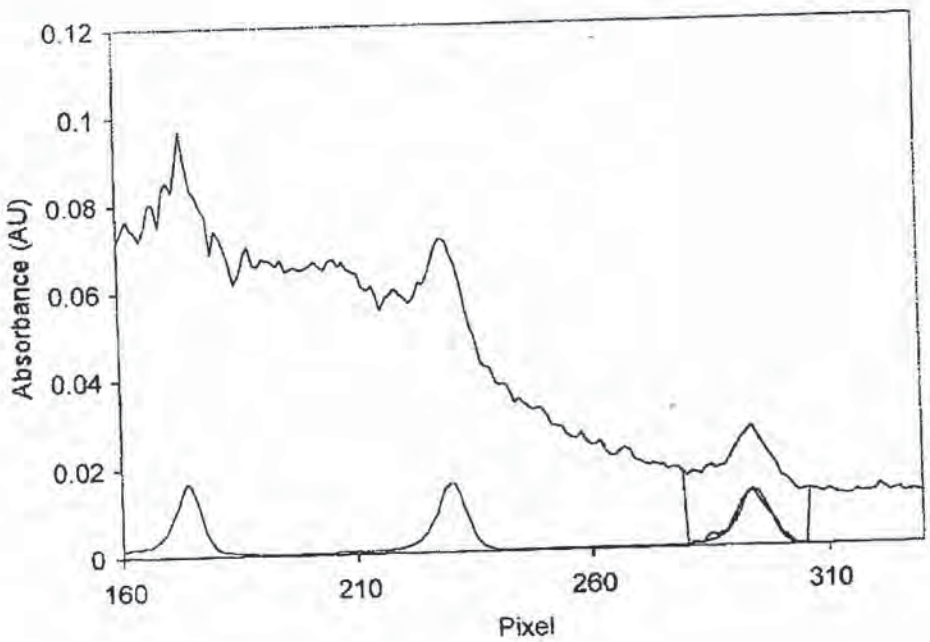

Extract spectrum

↓

Baselining

↓

SVD CLS

↓

Cal. Adjustment

↓

27.3 ppm-m NO