Integrated Heat and Power Plant Optimization
Bucharest Thermal Power Plants

Prepared for

Electrocentrale Bucureşti S.A.

ELCEN

July 2006

BLACK & VEATCH
building a world of difference™

ENERGY WATER INFORMATION GOVERNMENT

11401 Lamar, Overland Park, Kansas, USA, Tel: +1 (913) 458-2000
Webpage: http://www.bv.com

ISPE

1-3 Lacul Tei Blvd, 72301 Bucharest, Romania, Tel: +4021 210 2457
Webpage: http://www.ispe.ro

Black & Veatch Project Number 140364

The U.S. Trade and Development Agency

The U.S. Trade and Development Agency (USTDA) advances economic development and U.S. commercial interests in developing and middle income countries. The agency funds various forms of technical assistance, feasibility studies, training, orientation visits and business workshops that support the development of a modern infrastructure and a fair and open trading environment.

USTDA's strategic use of foreign assistance funds to support sound investment policy and decision-making in host countries creates an enabling environment for trade, investment and sustainable economic development. Operating at the nexus of foreign policy and commerce, USTDA is uniquely positioned to work with U.S. firms and host countries in achieving the agency's trade and development goals. In carrying out its mission, USTDA gives emphasis to economic sectors that may benefit from U.S. exports of goods and services.

Mailing and Delivery Address: 1000 Wilson Boulevard, Suite 1600, Arlington, VA 22209
Phone: 703-875-4357 • **Fax:** 703-875-4009 • **Web site:** www.tda.gov • **email:** info@tda.gov

Disclaimer: This report was prepared for the ELCEN SA and U.S. Trade and Development Agency by Black & Veatch Corporation (B&V) and is based on information not within the control of B&V. B&V has not made an analysis, verified or rendered an independent judgment of the validity of information provided by others. While it is believed that the information, data and opinions continued herein will be reliable under the conditions and subject to the limitations set forth herein, B&V does not guarantee the accuracy thereof. Use of this report or any information contained therein shall constitute a waiver and release of B&V from and against all claims and liability, including but not limited to liability for special, incidental, indirect or consequential damages, in connection with such use.

BLACK & VEATCH

Table of Contents
VOLUME 1 of 2

1.0 Introduction and Executive Summary 1-1

2.0 Control and Optimization Components 2-1
2.1 Unit Level Options 2-1
2.1.1 System Instrumentation 2-1
2.1.2 Control and Information Systems 2-2
2.1.3 Digital Data Historians 2-4
2.1.4 Performance Monitoring Systems 2-4
2.1.5 Combustion Optimization System 2-4
2.1.6 Post Combustion Optimization System 2-5
2.1.7 Continuous Emission Monitoring Systems 2-5
2.1.8 Electronic Data Loggers 2-6
2.1.9 Integrated Unit Performance Tools 2-6
2.2 Plant Level Options 2-6
2.2.1 Computerized Maintenance Management Systems 2-6
2.2.2 Plant Level Performance Monitoring Systems 2-7
2.3 System Level Options 2-7
2.3.1 Production Cost Models 2-7
2.3.2 Other Enterprise Solutions 2-8

3.0 Optimization Methodology 3-1
3.1 Methodology Considerations 3-1
3.1.1 Bucharest Heat Supply Scenario 3-1
3.1.2 Bucharest and Romania Electricity Generation and Trading Scenario 3-2
3.1.3 ELCEN Fuel Sourcing Scenario 3-3
3.1.4 Existing Equipment and Technical Feasibility 3-3
3.1.5 Compatibility with EU Standards 3-4
3.2 Unit, Plant & System Characterization 3-5
3.2.1 Assessment of Existing Systems, Infrastructure & Architecture 3-5
3.2.2 Data Collection 3-5
3.3 Methodology Procedure(s) 3-6
3.3.1 Optimization Logic Flow Diagram 3-6
3.3.2 Optimization Relationship 3-12
3.3.3 Architectural Arrangement Diagram 3-14
3.4 Baseline Data and Key Variables 3-16

4.0 Compatibility of Existing European Standards 4-1
4.1 EU Standards for Control and Communication 4-1
4.2 EU Standards for Electricity Markets – Electricity Directive 2003/54/EC 4-2

4.2.1 Objective of Electricity Directive 2003/54/EC 4-3
4.2.2 Summary of Electricity Directive 2003/54/EC 4-3
4.3 Union for the Co-ordination of Transmission of Electricity (UCTE) Standards 4-5
4.4 Environmental Impact Legislation 4-7

5.0 Production Cost Model 5-1
5.1 Production Cost Model 5-1
5.1.1 Introduction 5-1
5.1.2 Input Data 5-1
5.1.3 System Characteristics 5-1
5.1.4 Output Results 5-5

6.0 Minimum, Maximum and Optimum Project Scope 6-1
6.1 Development of Unit Hierarchy 6-1
6.2 Plant and Unit Assessment 6-3
6.2.1 Bucharest District Heating System Assessment 6-3
6.2.2 Bucuresti Sud CHPP 6-4
6.2.3 Bucuresti Vest CHPP 6-8
6.2.4 Grozavesti CHPP 6-9
6.2.5 Progresu CHPP 6-11
6.2.6 Titan CHPP 6-13
6.3 Development of Project Scope Packages 6-15
6.3.1 Minimum Project Scope Package 6-17
6.3.2 Maximum Project Scope Package 6-18
6.3.3 Optimum Project Scope Package 6-19

7.0 Economic Evaluation and Financial Pro Forma 7-1
7.1 Capital Cost Estimates 7-1
7.2 Estimates of Benefits 7-7
7.3 Financial Pro Forma 7-10
7.4 Pro forma Results and Sensitivity Analysis 7-14
7.5 Plant Level Pro forma 7-15
7.6 Bucuresti Sud Unit 5 Pro forma 7-21

8.0 Preliminary Environmental Impact Assessment and Developmental Benefits 8-1
8.1 Existing Environmental Conditions 8-1
8.1.1 Geographical data 8-1
8.1.2 Soils 8-3
8.1.3 Seismicity 8-4
8.1.4 Climate and Meteorology 8-5
8.1.5 Air and Water Quality Regulations 8-6

8.1.6 Socioeconomics 8-8
8.2 Potential Environmental Impacts and Mitigation Measures 8-8
8.2.1 Air/Water Quality 8-8
8.2.2 Soil and Noise Quality 8-9
8.2.3 Socioeconomic Impacts and Developmental Benefits 8-9

9.0 Implementation Plan 9-1
9.1 Overview of Financing Options 9-1
9.1.1 Types of Financing 9-1
9.1.2 Sources of Financing 9-3
9.1.3 Financing Recommendations 9-6
9.2 List of U.S. Equipment and Service Providers 9-7
9.3 Implementation Schedule for Control and Optimization Solutions 9-7
9.4 Sample Implementation Plan for Bucuresti Sud Unit 5 9-18

10.0 Detailed Cost Estimate 10-1

11.0 EPC Bidding Documents 11-1

Appendix A: Glossary of Terms A-1

Appendix B: Control and Optimization Component Suppliers B-1

VOLUME 2 of 2

Appendix C: EPC Bid Documents C-1

Tables

Table 1.1: Financial Summary for Minimum, Maximum and Optimum Scope of Work 1-3
Table 1.2: Financial Summary for Plants within Optimum Scope of Work 1-3
Table 3.1: Optimization Tool Dependencies 3-4
Table 3.2: Baseline Data and Key Variables 3-17
Table 4.1: EU Standards for Control and Communication 4-1
Table 4.2: EU Standards for Emission Levels 4-8
Table 4.3: Romanian Standards for Emission Levels 4-8
Table 4.4: Romanian Standards for Emission Levels (<50 MW Plant) 4-9
Table 5.1 Heat and Electric Load Monthly and Annual Summary. 5-2
Table 5.2. Units modeled. 5-3
Table 5.3. Unit burn equation coefficients. 5-4
Table 5.4 Detailed Unit Characteristics. 5-4
Table 5.5 Annual Output. 5-5
Table 5.6 Monthly Output 5-6
Table 6.1 Decommissioning Plan 6-1
Table 6.2 Preliminary Unit Hierarchy Based on Results of Production Cost Model 6-2
Table 6.3 Final Unit Hierarchy Based on Results of Production Cost Model 6-2
Table 6.4: Minimum Project Scope 6-17
Table 6.5: Maximum Project Scope 6-18
Table 6.6: Optimum Project Scope 6-19
Table 7.1: Minimum Project Scope Cost Estimate 7-4
Table 7.2: Maximum Project Scope Cost Estimate 7-5
Table 7.3: Optimum Project Scope Cost Estimate 7-6
Table 7.4: Benefits Estimate for Minimum, Maximum and Optimum Project Scopes 7-9
Table 7.5: Minimum Scope Financial Pro Forma 7-11
Table 7.6: Maximum Scope Financial Pro Forma 7-12
Table 7.7: Optimum Scope Financial Pro Forma 7-13
Table 7.8: Comparative System Level Pro forma Results for Minimum, Maximum, Optimum Scope of Work 7-14
Table 7.9: Plant Level Pro forma for Bucuresti Vest for Optimum Scope of Work 7-16
Table 7.10: Plant Level Pro forma for Bucuresti Sud for Optimum Scope of Work 7-17
Table 7.11: Plant Level Pro forma for Grozavesti for Optimum Scope of Work 7-18
Table 7.12: Plant Level Pro forma for Progresu for Optimum Scope of Work 7-19
Table 7.13: Plant Level Pro forma for Titan for Optimum Scope of Work 7-20
Table 7.14: Comparative Plant Level Pro forma Results for Optimum Scope of Work 7-21
Table 7.15: Pro forma for Bucuresti Sud Unit 5 for Maximum Scope of Work 7-22
Table 7.16: Pro forma Results for Bucuresti Sud Unit 5 Maximum Scope of Work 7-23
Table 10.1: Detailed Cost Estimate for Bucuresti Sud Unit 5 in Accordance with Romanian Legislative Requirements 10-2

Table 10.2: Detailed Cost Estimate for Bucuresti Sud Unit 5 for Unit and Plant-Level Solutions 10-3

Figures

Figure 1.1: Map of Plants included in Study 1-1
Figure 3.1 Bucharest Heat Supply Sources 3-1
Figure 3.2 ELCEN Electricity and Heat Dispatching Philosophy 3-2
Figure 3.3: Optimization Logic Flow Diagram 3-7
Figure 3.4: Sample Optimum Project Scope 3-10
Figure 3.5: Optimization Relationship Schematic 3-13
Figure 3.6: Architectural Arrangement Diagram 3-15
Figure 5.1. Heat-Power Feasible Region for Cogeneration Unit 5-2
Figure 5.2 Monthly Heat and Power Generation and Demand 5-7
Figure 6-1 Bucharest District Heating System 6-4
Figure 6.2 Bucharest South CHPP Schematic Drawing 6-5
Figure 6.3 Bucuresti Vest CHPP Schematic Diagram 6-8
Figure 6.4 Grozavesti CHPP Schematic Diagram 6-10
Figure 6.5 Progresu CHPP Schematic Diagram 6-12
Figure 6.6 Titan CHPP Schematic Diagram 6-14
Figure 7.1: Present Worth Discount Rate Variation at Debt-Equity Ratio of 60%-40% 7-15
Figure 7.2: Debt-Equity Ratio Variation at Present Worth Discount Rate of 18% 7-15
Figure 7.4: Bucuresti Sud 5: Debt-Equity Ratio Variation at Present Worth Discount Rate of 18% 7-24
Figure 8.1: Map and Relative Location of Romania 8-1
Figure 8.2: Physical Map of Romania 8-2
Figure 8.3: Romanian Geologic Map 8-4
Figure 8.4: Romanian Seismic Activity Map 8-5
Figure 8.5: Romanian Rainfall Map 8-6
Figure 9.1: Schedule for Implementation of Production Cost Model Solution 9-9
Figure 9.4: Schedule for Implementation of Instrumentation Solution 9-12
Figure 9.5: Schedule for Implementation of Distributed Control System Solution 9-13
Figure 9.6: Schedule for Implementation of Data Historian Solution 9-14
Figure 9.7: Schedule for Implementation of Combustion Optimization System Solution 9-15
Figure 9.8: Schedule for Implementation of Continuous Emissions Monitoring System Solution 9-16
Figure 9.9: Schedule for Implementation of Electronic Data Logger Solution 9-17
Figure 9.10: Flowchart for Implementation of Bucuresti Sud Unit 5 Solutions 9-19
Figure 9.11: Overall Project Implementation Schedule for Bucuresti Sud Unit 5 9-20

SPECIFICATIONS
AND
DOCUMENTS

ELCEN

PRODUCTION COST MODEL SOFTWARE

RFP NO.
PROJECT

BID ISSUE
(REV 0)

building a world of difference™ | BLACK & VEATCH

TABLE OF CONTENTS

	Page
A - GENERAL INFORMATION	
A.1 INSTRUCTIONS TO BIDDERS	A-1
A.2 RIGHT TO REJECT	A-1
A.3 VALIDITY	A-1
A.4 PROJECT PROCEDURES	A-1
A.4.1 Correspondence	A-1
A.4.2 Project Team	A-1
A.4.3 Scope Change Document	A-1
A.4.4 Invoicing	A-2
A.4.5 Warranty	A-2
A.4.6 Performance Guarantee	A-2
A.4.7 Acceptance Documentation	A-3
A.4.8 Insurance	A-3
B – BID DATA	
B.1 GENERAL	B-1
B.2 PRODUCTION COST MODEL SOFTWARE DATA	B-1
Section 1A – SCOPE OF WORK	
1A.1 GENERAL	1A-1
1A.2 WORK INCLUDED UNDER THIS SPECIFICATION	1A-1
1A.2.1 Miscellaneous Materials and Services	1A-1
1A.3 WORK NOT INCLUDED UNDER THIS SPECIFICATION-	1A-1
1A.4 WORK INCUDED AS OPTIONS UNDER THIS SPECIFICATION-	1A-1
1A.5 CONTRACTOR'S SERVICES	1A-2
1A.5.1 Submittal of Engineering Data	1A-2
1A.5.2 Contractor's Field Technical Services	1A-2
1A.5.3 Implementation Conference	1A-2
1A.6 LANGUAGE, NUMBERS, AND SYMBOLS	1A-2
Section 1B – DESIGN DATA AND DRAWINGS	
1B.1 GENERAL	1B-1
1B.2 CORRESPONDENCE	1B-1
1B.3 REVIEW OF ENGINEERING DATA	1B-1
1B.4 DESIGN DATA	1B-1
1B.5 DRAWINGS & OTHER CONTRACTOR PREPARED MATERIALS	1B-1
1B.5.1 Drawing & Material Submittal	1B-2
1B.5.2 Final Markup Drawings & Materials	1B-2
1B.6 INSTRUCTION MANUALS/DOCUMENTATION	1B-2

Section 1C– SCHEDULE

1C.1 GENERAL	1C-1
1C.2 SCHEDULE	1C-1
1C.3 PRELIMINARY SCHEDULE	1C-1
1C.4 CONTRACTOR'S DETAILED SCHEDULE	1C-1

Section 1D – OTHER REQUIREMENTS

1D.1 GENERAL	1D-1
1D.2 REFERENCED STANDARDS	1D-1
1D.2.1 List of References	1D-2
1D.3 MATERIALS	1D-2
1D.4 IDENTIFICATION	1D-2
1D.5 SHIPMENTS	1D-2
1D.6 SHIPPING NOTICE	1D-3
1D.7 MATERIALS LIST	1D-3
1D.8 CORRECTION OF ERRORS	1D-3
1D.9 QUALITY ASSURANCE	1D-3

Section 2A – TECHNICAL REQUIREMENTS

2A.1 GENERAL INTENTION	2A-1
2A.2 UNIT DESCRIPTIONS	2A-1
2A.3 GENERAL SOFTWARE REQUIREMENTS	2A-1
2A.4 GENERAL HARDWARE REQUIREMENTS	2A-2
2A.5 INSTRUMENTATION	2A-2
2A.6 CONTROL POWER	2A-2
2A.7 TRAINING	2A-2
2A.8 TECHNICAL SUPPORT	2A-2
2A.8.1 Telephone Support	2A-2
2A.8.2 On-Site Support	2A-2
Section 3A – INSTALLATION AND CONSTRUCTION	Not Used

A - GENERAL INFORMATION

It is ELCEN's intention to purchase a comprehensive Production Cost Model Software package for evaluating the cost and impacts of variations in system demand and key unit economic and performance variables. The primary purpose of this software will be to evaluate unit-specific dispatch within the Purchaser's dispatch area as well as within a regional power pool.

A.1 INSTRUCTIONS TO BIDDERS. The Contractor shall provide a complete proposal detailing but not necessarily limited to a description of the services, exceptions and/or clarifications to the proposal, fees, rate structures, and terms and conditions which will govern the project. The Contractor will provide a description of the work package. THE PROPOSAL SHALL INCLUDE THE ESTIMATED MAN-HOURS AND ASSOCIATED COSTS FOR THE PROJECT; THE COSTS SHALL BE CONSIDERED AS FIRM PRICE, WITH NO INCREASES BEING ALLOWED EXCEPT FOR AUTHORIZED CHANGED IN THE SCOPE OF WORK.

A.2 RIGHT TO REJECT. The right is reserved by ELCEN to reject any or all proposals. In addition, ELCEN may elect to cancel the project if it is determined necessary by ELCEN or if funding is not available.

A.3 VALIDITY. Bidder's proposal shall remain valid for a period of _____ (__) days commencing on the proposal date.

A.4 PROJECT PROCEDURES. The following items and services shall be furnished as optional work under this specification:

A.4.1 Correspondence. All correspondence and documents from the Contractor to ELCEN during the proposal process shall be addressed to:

Type name and address of ELCEN contacts here.

After award, a formal distribution list for letters, transmittals, etc. will be created.

A.4.2 Project Team. The Contractor shall have a dedicated Project Manager responsible for the coordination of all project related activities. The Project Manager identified for this project by the Contractor shall remain in that position throughout the project. Any changes in this key position shall be with the approval of ELCEN.

The Contractor shall include resumes of personnel who would be assigned to the project, project team organization, job descriptions, project experience, and other information that is considered pertinent.

ELCEN reserves the right to request personnel changes if performance/experience becomes an issue.

A.4.3 Scope Change Document . For any modified scope changes or additions to the Contractor work, the Contractor will provide written notification per the contract procedure. ELCEN reserves the right to have any extra work performed on a firm price, not-to-exceed or cost-plus basis. The Contractor will submit with his proposal a complete rate structure applicable to any work to be performed under this agreement.

The Scope Change Document shall describe the reason for change, the person who requested the change, the original scope and man-hour cost, and the new scope and man-hour cost.

Each Scope Change Document shall be consecutively numbered. Any effects on the engineering schedule and overall project schedule shall be described. **WRITTEN APPROVAL FROM ELCEN IS REQUIRED BEFORE PROCEEDING WITH THE SCOPE CHANGE.**

A.4.4 Invoicing. The Contractor's proposal is to include a description of their invoicing procedures. ELCEN will issue a purchase order to the selected Contractor. Invoices not complete in reference or lacking in backup information will be rejected.

Progress and/or milestone based payments will be made in an amount equal to _____ (___) percent of Work completed with the balance being retainage.

Final payment will be made upon completion and acceptance of the work. Retainage will be paid after all submittals have been received and accepted following final payment.

A.4.5 Warranty. The Contractor shall provide a warranty on all the hardware, software and services rendered to ensure that the Production Cost Model Software meets the following requirements:

Be free from defects in design, material, workmanship and title;

Be of the kind, quality and capability designated or described in the Contract;

Perform in the manner set forth in or required by the Contract; and

Have been produced processed, delivered and sold or licensed in conformity with all applicable federal, state and local laws, administrative regulations and orders. The Contractor shall execute, certify and deliver to ELCEN any documents as may be required to effect or evidence compliance with such federal, state and local laws.

Except for consumable items, the warranty period shall be _____.

During the warranty period, the Contractor shall provide free of charge telephone support for ELCEN users and remote support for Software imperfections.

A.4.6 Performance Guarantee. The performance guarantee shall be in the form of a bank letter of credit for 10% of the contract value, valid until receipt and approval of the Acceptance Documentation; or by retention of 10% of the amount of each invoice, retention to be paid upon receipt and approval of the Acceptance Documentation. If in the form of a

bank letter of credit, the performance guarantee should be issued by a bank in Romania, or by a bank abroad with a correspondent in Romania.

A.4.7 Acceptance Documentation. The Contractors shall provide to the Purchaser the Acceptance Documentation (at the end of executions works, at the end of commissioning, at the end of the guarantee period) in accordance with the Romanian legislation in force.

A.4.8 Insurance. The Contractor shall provide full insurance of all software, hardware, etc, against losses or damages during execution, transportation, storage, testing, and commissioning.

B - BID DATA

B.1 GENERAL. Each Bidder shall submit complete and definitive information on his proposal offering in sufficient detail to permit a complete technical analysis of the Proposal.

The requirements for information contained in this Section are basic. Additional information shall be provided as requested by the Purchaser.

The scope of supplementary information and equipment data requested herein shall be included in the Proposal to the fullest extent possible at the time of bid submittal. As a minimum, sufficient proposal data shall be submitted to demonstrate compliance with this specification, and to allow a comprehensive evaluation of the bid. Proposals lacking sufficient data to satisfy these requirements will be considered non-responsive. The successful Bidder shall complete all data submittal requests and Proposal data entries for inclusion in the Purchase Order documents prior to the Award of Contract.

B.2 PRODUCTION COST MODEL SOFTWARE DATA. Submit Data required on the following pages. Where options are indicated in the PROPOSAL FORM or BID DATA, provide complete information for each option.

Entries on the BID DATA forms shall be entered electronically in the MS Word file contained on the CD-ROM or diskette included with this specification. A hardcopy of the BID DATA will be included with each proposal. Electronic copies of the BID DATA file will be provided along with the required numbers of proposals.

Electronic copies of the files may be submitted by CD-ROMs or 3.5 inch diskette. Electronic copies submitted with the proposal will be virus checked and will be certified to be virus free.

REQUIREMENT DESCRIPTION	CONTRACTOR RESPONSE
GENERAL	
Describe the general applications / use of this software.	
Describe the typical software implementation strategy.	
Describe in detail the assistance you will need from the Purchasers staff in the installation and implementation of the software package. What are the tasks the plant staff must perform in the data gathering, parametric testing, system development and initial installation of the system? Include an estimate of hours per week involvement by plant staff.	
Detail the terms under which source code will be made available for exclusive purpose of self-maintaining the optimization system software.	
How much on-site support time will you provide during system installation and tuning in preparation for on-line operation? Describe and identify the make-up of the optimal project team including individual skill sets.	
Describe your on-going support (e.g., Help Desk, hot line, newsletters, user groups, internet, e-mail, etc.). Describe your procedure for problem resolution. What are the lead time requirements and criteria for on-site technical support?	
Would you use third party contractors or subcontractor for any of the services required under the specification? If so, for what parts of the project?	
What is the nature of outside help needed by plant staff to create new generation scenarios?	
Can plant staff update or recalibrate the unit-specific models or will they be required to use your services? Explain.	
What is the nature of outside help needed by plant staff to maintain the existing software?	
What is the nature of outside help needed by plant staff to update the existing software? (i.e., new version release)	
Is there a User's Group. If yes, please indicate the number of members.	
Number of current software users.	
Describe the overall system architecture including system size, redundancies, I/O quantity (if applicable), interfaces with other systems, UPS requirements / type (if applicable), backup requirements, list of equipment, etc.	

REQUIREMENT DESCRIPTION	CONTRACTOR RESPONSE
SOFTWARE DESCRIPTION	
Describe the type of software application (i.e. client/sever, standalone program, network installation, application service provider (ASP), etc.).	
Windows ___ is the preferred operating system. What operating systems are supported (i.e. Windows NT, Windows XP, etc.) by the software?	
List the minimum and recommended client and server hardware requirements including. • Processor • RAM • Hard Drive Size • Network card (Ethernet LAN, TCP/IP protocol) • Monitor Size • Printer Requirements • Modem Requirements	
How many users (seats) are supported with a single software license?	
What is the current version number and release date? How often are updates issued?	
How many generating units can be included in an evaluation / scenario?	
What types of generating units can be included in an evaluation / scenario (fossil, hydro, nuclear, etc.)	
Can thermal demand scenarios (i.e. district heating supplied from multiple generating units) be evaluated with this software? Do you offer another software product that supports this type of evaluation?	
The software should support SI units of measure. Explain how the proposed software meets this requirement.	
What languages are currently supported by the software?	
If not currently available, can a Romanian language user version (including user interface and output) be developed? If yes, provide the estimated cost as an	

REQUIREMENT DESCRIPTION	CONTRACTOR RESPONSE
option service below.	
Describe the documentation that will be provided with the software.	
Can you provide market specific data for the eastern European region including Romania, Bulgaria, Moldova, Hungary, Yugoslavia, Slovenia, and the Ukraine?	
Describe other potential applications of the software.	
Can the software be interfaced to Purchaser's other software through intermediate files, tables, etc.?	
INPUT REQUIREMENTS	
How is input data entered and stored?	
The ability to modify input data outside of the software GUI using standard third party tools such as spreadsheets, editors, SQL tools, etc. is desired. Explain how your software supports this need.	
What energy demand inputs are required by the software? (Provide a detailed list.)	
What other energy demand inputs are supported by the software? (Provide a detailed list.)	
What unit-specific inputs are required by the software? (Provide a detailed list.)	
What other unit-specific inputs are supported by the software? (Provide a detailed list.)	
Can unit-specific inputs vary by time period to account for changes in unit configuration or performance? If not, how is this modeled?	
What economic inputs are required by the software? (Provide a detailed list.)	
What other economic inputs are supported by the system? (Provide a detailed list.)	
Can economic inputs vary by time period? Describe how this is modeled.	
Is information stored on a scenario-by-scenario basis or as individual objects which are linked together for form scenarios?	

REQUIREMENT DESCRIPTION	CONTRACTOR RESPONSE
What are the minimum and maximum time periods that can be evaluated?	
Does the software have the ability to default missing information?	
Can predictions calibrated? Please describe.	
OUTPUT DATA	
How are results stored??	
How are results displayed? What is included in the standard output?	
Describe the type of results that can be displayed and level of detail available for each type of output.	
How are program errors identified and reported to the user?	
What debugging tools are available to the user and/or system administrator?	
Model results should be able to be shared outside of the software (reports, spreadsheets, etc.) Explain how the software supports this requirement.	
What other software tools are recommended or required for use with the proposed Production Cost Model Software?	
Can the output be customized by the user?	
OPTIONAL SERVICES	
Please describe any optional services which are recommended or can be provided on an as-needed basis including the following: • On-site training. • Input data collection • Scenario development and evaluation • Program customization (input screens, output, interfaces to legacy systems, etc.)	

Section 1A - SCOPE OF WORK

1A.1 GENERAL. This section covers the general description, scope of work, and supplementary requirements for the work included under this specification.

It is ELCEN's intention to purchase a comprehensive Production Cost Model Software package for evaluating the cost and impacts of variations in system demand and key unit economic and performance variables. The primary purpose of this software will be to evaluate unit-specific dispatch within the Purchaser's dispatch area as well as within a regional power pool.

The work included under this specification shall be supplied FOB PLANT NAME, PLANT LOCATION.

1A.2 WORK INCLUDED UNDER THIS SPECIFICATION. The work performed by the Contractor shall be to furnish software for evaluating the cost and performance impacts of variations in fuel quality on fossil-fuel fired steam generating units. Items or services to be quoted as options to the base bid are listed under WORK INCLUDED AS OPTIONS UNDER THIS SPECIFICATION.

All computer software and documentation shall be furnished by the Contractor as specified by the Purchaser in this specification.

1A.2.1 Miscellaneous Materials and Services. Miscellaneous materials and services not otherwise specifically called for shall be furnished by the Contractor in accordance with the following:

> All supporting third-party software with the exception of the Windows operating system software required to install and operate of the Production Cost Model Software on the designated Purchaser's workstation(s).

1A.3 WORK NOT INCLUDED UNDER THIS SPECIFICATION. The following items of work will be furnished by the Purchaser (unless furnished as part of optional work under WORK INCLUDED AS OPTIONS UNDER THIS SPECIFICATION):

> Miscellaneous services and materials specified as furnished by the Purchaser.
>
> Computer hardware.
>
> Personnel to conduct acceptance testing of software based on Contractor's test plan.

1A.4 WORK INCLUDED AS OPTIONS UNDER THIS SPECIFICATION. The following items and services shall be furnished as optional work under this specification:

> On-site training of staff in the installation and operation of the software on one or more designated workstations.

Development and calibration of unit specific models or input files required to support evaluation of alternative fuels or fuel blends.

Customized output reporting based on ELCEN specific requirements identified following user training and familiarization.

1A.5 CONTRACTOR'S SERVICES. The services called for in WORK INCLUDED UNDER THIS SPECIFICATION and the services inherent to any options purchased by the Purchaser as called for in WORK INCLUDED AS OPTIONS UNDER THIS SPECIFICATION shall be in accordance with the following.

1A.5.1 Submittal of Engineering Data. Hardware requirements, software inputs and other engineering data for the software are essential to the implementation of the entire project. The Contractor shall submit related engineering data in accordance with the schedule and requirements specified herein to assure compliance with the overall installation and operating schedule.

1A.5.2 Contractor's Field Technical Services. The Contractor shall furnish the services of one or more technical service representatives when requested by the Purchaser. The service representatives shall be technically competent and experienced in the installation and operation of the system, and authorized by the Contractor to perform the work stipulated. The Contractor's technical representative shall be responsible for all on-site work.

As part of the base scope of the work, the Contractor's technical service representatives shall provide periodic assistance and direction to the Purchaser and shall review the computer hardware and software setup with the Purchaser after installation and identify any recommended changes or adjustments to assure proper operation.

As an optional service, the Contractor's technical service representative shall be available to support software installation, data collection, model configuration, model calibration, and acceptance testing. The technical service representative shall instruct the plant personnel in the proper operation of the system.

1A.5.3 Implementation Conference. The Contractor's technical service representative shall attend an implementation conference at a time and place selected by the Purchaser to discuss matters relative to the execution of this Contract. The Contractor's technical service representative shall attend additional conferences as required by the Purchaser thereafter to expedite the work.

1A.6 LANGUAGE, NUMBERS, AND SYMBOLS.
All the documents of the offer and before signing the contract shall be in English. After signing the contract, all drawings, designs, specifications, manuals, operating instructions, statements, schedules, notices, documents, nameplates, and markings shall be in both the English and Romanian languages. All graphics developed by the Contractor shall be in the Romanian language. Windows operating system graphics may be supplied in English if a Romanian version is not available.

All units of measurement shall be stated in the SI - system. The Contractor shall further be required to employ in all drawings and submittals the same symbols and designations as are used by the Purchaser.

Section 1B – DESIGN DATA AND DRAWINGS

1B.1 GENERAL. This section stipulates the requirements for engineering data, software documentation, or other materials which the Contractor may submit for review.

1B.2 CORRESPONDENCE. Correspondence on all technical matters shall be addressed to the Purchaser as follows:

ELCEN
UTILITY ADDRESS

Attention: CONTACT NAME

Correspondence on all procedural and commercial matters shall be addressed to the Purchaser's Representative as follows:

ELCEN
UTILITY ADDRESS

Attention: ELCEN CONTACT NAME

Letters of transmittal shall accompany submittals of engineering data, software documentation or other materials and shall include a list of the items included in the transmittal. Correspondence shall be identified with the project name and plant name. Transmittal of drawings and data shall be as specified in the article entitled DRAWINGS & OTHER CONTRACTOR PREPARED MATERIALS.

1B.3 REVIEW OF ENGINEERING DATA. The Purchaser's review of engineering data will cover only general conformity of the data to the specifications and documents, external connections and interfaces with existing equipment. This review does not indicate a thorough review of all dimensions, quantities, and details of the equipment, material, device, or item indicated or the accuracy of the information submitted. This review shall not be construed as relieving the Contractor from any responsibility for errors or deviations from the requirements of the contract documents.

1B.4 DESIGN DATA. The following design data shall be submitted as scheduled in Section 1C, unless otherwise specified:

List of minimum and recommended hardware requirements.

Itemized list of software input requirements including fuel quality, equipment configuration, equipment performance, and economic variables.

1B.5 DRAWINGS & OTHER CONTRACTOR PREPARED MATERIALS. It is not anticipated that any Contractor-prepared drawings will be required for this project. However, any Contractor-prepared drawings or other Contractor prepared materials shall be sufficient detail to indicate the arrangement, description, operation or use of the materials for the information specifically requested in the submittal schedule specified in Section 1C.

1B.5.1 Drawing & Material Submittal. ____(__) copies of the drawings and /or other contractor prepared materials shall be submitted to the Purchaser as follows:

> _____copies to:
> ELCEN
> Address.
>
> Attention: Contact

Markups reviewed by the Purchaser will be returned to the Contractor with corrections or exceptions clearly marked. The Contractor shall make the changes noted thereon and copies of the corrected drawings or data shall be submitted for review in the same manner as the original submittal.

When the drawings or other Contractor prepared materials are returned to Contractor with no corrections or exceptions noted the Contractor shall submit versions for final distribution as specified hereinafter under Final Markup Drawings and Contractor Prepared Materials..

No work shall be performed in connection with the installation of equipment, materials, computer hardware and software until the drawings and data have been reviewed by the Purchaser except at the Contractor's own risk and responsibility. Work may proceed on equipment, materials, computer hardware and software when the drawings and data therefore have been returned with no corrections or exceptions noted; or when drawings have been returned with corrections or exceptions noted, provided the work is performed in accordance with the Purchaser's notations.

If changes are made at the project site to the equipment to correct installation errors, due to design changes or wiring revisions, revised drawings indicating the changes made shall be prepared and submitted to the Purchaser..

1B.5.2 Final Markup Drawings & Materials. After receipt from the Purchaser of drawings or other Contractor prepared materials with no corrections or exceptions noted, the Contractor shall transmit _____(__) copies to the Purchaser for final distribution.

1B.6 INSTRUCTION MANUALS/DOCUMENTATION. The Contractor shall furnish instruction manual and documentation bound in a binder suitable for long term rough usage. Front covers of the manuals shall be permanently marked with lettering indicating Purchaser's name, plant name, name of software and name of manufacturer.

The manuals shall include the following information specific to each version of the software supplied by the Contractor:

- Table of Contents and index tabs.
- Name, address, telephone number, and fax number of the local and national service representative and supplier and 24 hour emergency service contact.
- Specifications including minimum and recommended hardware requirements.
- Description of the software.
- Installation instructions.
- Operating instructions.
- Software troubleshooting guidelines.
- Data backup and recovery guidelines.

The above listed requirements are the minimum. Additional information that is necessary for proper installation, operation and utilization of the software shall also be included.

One copy of the instruction manual shall be submitted to the Purchaser for review. After the manual has been approved, the final ____ ( ) copies should be sent to the Purchaser.

Section 1C - SCHEDULE

1C.1 GENERAL. This section covers the schedule and scheduling requirements for performance and completion of the work included under this Contract.

1C.2 SCHEDULE. Milestone, payment and delivery schedules are defined below. The completion dates indicated are essential to the work under this Contract and to the coordination and continuity of other Purchaser work activities..

The listing of activities and dates is not intended to be a complete or detailed listing of all work under this Contract or of all interfaces with the work of other contractors.

It is understood and agreed that the dates shown within the Milestone and the Payment and Delivery Schedules are the latest feasible completion dates and that earlier dates may be attained as agreed to by the Purchaser and the Contractor.

Milestone	Date
Issue Request For Proposal	
Receive Bidder Responses to RFP Including Detailed Data Input Requirements	
Contract Award	
Software Installation	
(Optional) Software Training	
(Optional) Data Collection	
(Optional) Model Delivery	
(Optional) Evaluation Report	

1C.3 PRELIMINARY SCHEDULE. The Contractor shall submit, as part of his proposal, a preliminary schedule of the work. This preliminary schedule shall include a bar chart showing all major activities. The Contractor shall also submit with his proposal a work plan, which describes the activities in sufficient detail to clearly show his understanding of the concentrated effort and coordination required to complete the work by the scheduled contract completion date.

1C.4 CONTRACTOR'S DETAILED SCHEDULE. Within 5 days after the date of contract award, the Contractor shall submit a detailed schedule. The detailed schedule shall be based upon the dates specified in the schedule included herein.

The detailed schedule shall be in bar graph form acceptable to the Purchaser.

The detailed schedule shall contain all activities of the plan, including acquisition of special equipment, materials, computer hardware, and computer software. For all equipment and materials supplied by the Contractor especially for this project, the schedule shall include the sequence of activities including issuance of purchase orders, preparation of drawing markups and delivery. Each activity shall be identified on the schedule by a descriptive title and shall be assigned an estimated number of working days required and an expected completion date.

Schedules returned to the Contractor for revision or correction shall be resubmitted for review within ___ calendar days. Upon acceptance by the Purchaser of the detailed schedule of activities, the Contractor will be responsible for maintaining such schedule.

Section 1D - OTHER REQUIREMENTS

1D.1 GENERAL. These requirements apply in general to all equipment, computer hardware, and software and are supplementary to the technical requirements. If requirements specified herein are in conflict with the requirements specified in the technical requirements, the technical requirements shall govern to the extent of such conflict.

The Contractor's proposal shall be based upon the use of equipment and materials complying fully with the requirements specified in this Section. It is recognized that the Contractor may have standardized on the use of certain components, materials, processes, or procedures different than those specified herein. Alternates in addition to the base proposal on the basis of supplying the Contractor's standard components, materials, processes, or procedures will be considered. The alternate proposal shall clearly stipulate the alternate proposed, the specific exceptions to the specification, and the price change applicable for supplying such alternate.

1D.2 REFERENCED STANDARDS. Reference to the standards of any technical society, organization, or association, or to the laws, ordinances, or codes of governmental authorities shall mean the latest standard, code, or specification adopted, published, and effective at the date of taking bids unless specifically stated otherwise in this specification.

The specifications, codes, and standards referenced in this specification (including addenda, amendments, and errata) shall govern in all cases where references thereto are made except where they conflict with this specification. In case of conflict between the referenced specifications, codes, or standards and this specification, the latter shall govern to the extent of such difference.

All engineered equipment manufactured under this specification and the associated engineering for the manufacture shall be in accordance with the codes and standards detailed in the specification sections and the following codes and standards.

For engineered equipment manufactured under this specification and the associated engineering for that engineered equipment, reference in these specifications is made to only USA standards, codes, and specifications, and the equipment, materials, and workmanship furnished under these specifications shall be in accordance with the standards, code, or specification designated. Equivalent standards, codes and specifications of other authorities will be considered when submitted to the Purchaser or Purchaser's Representative in the English language. If the proposed substitute standards, codes, or specifications are acceptable to the Purchaser and the Purchaser's Representative, their use will be authorized in writing. In the event the substitute standards, codes, or specifications are not acceptable, the work shall proceed in accordance with USA standards, codes, and specifications designated in the specifications.

All materials furnished and installation procedures used under this specification shall conform with accepted good engineering practice, the codes and standards detailed in the specification sections, and the requirements of the applicable Romanian standards.

1D.2.1 List of References. All engineered equipment, engineering, materials, and installation provided under this specification shall be in accordance with the following codes and standards.

Works	**In Accordance With**
Software Development & Testing	ISO 9001 Guidelines

1D.3 MATERIALS. Unless specifically provided otherwise in each case, all materials, equipment, computer hardware, and computer software furnished for permanent installation shall conform to applicable standard specifications and shall be new, unused, and undamaged.

1D.4 IDENTIFICATION. All shipping notices, computer hardware and software, and other documents pertaining to the equipment and materials furnished under this specification shall be identified as follows:

ELCEN
ADDRESS

Attention: CONTACT NAME

1D.5 SHIPMENTS. All shipments shall be F.O.B. destination, freight allowed.

The Contractor shall discuss with the Purchaser the routing of shipments and shall route the same as indicated by the Purchaser provided freight rates are no greater than by other routes. Shipments are accepted Monday through Friday from _____ a.m. to _____ p.m.

All shipments shall be delivered to:

ELCEN
PLANT ADDRESS

Attention: CONTACT NAME

The equipment shall be shipped boxed, crated, or otherwise protected against damage during shipment, handling, and storage at the Project Site. Openings shall be closed with caps, plugs, or other suitable closure devices suitable for rough usage. Packaging shall be suitable to prevent moisture or water damage during shipment and outdoor storage at the Project Site.

The shipping forms must include the following content:

- Fiscal bill (invoice);
- Shipping notice;
- Certificate of origin;
- Factory testing certificate;
- Quality and conformity certificate;
- Guarantee certificate;
- EUR certificate;
- Transport certificate;
- Import statement value;
- Insurance policy-"for all risks"

1D.6 SHIPPING NOTICE. The Contractor shall submit to the Purchaser duplicate copies of shipping notices describing each shipment of material, equipment, computer hardware, or software. Climate control requirements shall be included. The shipping notices shall be mailed to arrive approximately ___ days ahead of the estimated shipment arrival. The addressee for each shipping notice will be CONTACT NAME.

1D.7 MATERIALS LIST. The Contractor shall prepare and submit with the first shipping notice duplicate copies of an itemized materials list covering all material, equipment, computer hardware and software furnished under this specification. The materials list shall be in sufficient detail to permit an accurate determination of the completion of shipment.

1D.8 CORRECTION OF ERRORS. Equipment and materials shall be complete in all respects within the limits herein outlined. All errors or omissions required to be corrected in the field shall be done by the Contractor or his duly authorized representative at the Contractor's expense.

1D.9 QUALITY ASSURANCE. The Contractor shall maintain a quality assurance program that provides that equipment, materials, and services under this specification whether manufactured or performed within the Contractor's plant or at any other source shall be controlled at all points necessary to assure conformance to contractual requirements. The program shall provide for the prevention and ready detection of discrepancies and for timely and positive corrective action. The Contractor shall make objective evidence of quality conformance readily available to the Purchaser. Instructions and records for quality assurance shall be controlled.

Section 2A – TECHNICAL REQUIREMENTS

2A.1 GENERAL INTENTION. It is the intention of the Purchaser to purchase a comprehensive Production Cost Model Software package for evaluating the cost and impacts of variations in system demand and key unit economic and performance variables. The primary purpose of this software will be to evaluate unit-specific dispatch within the Purchasers dispatch area as well as within a regional power pool.

The software must be capable with PC based workstations utilizing the Windows ____ operating system(s). The system shall be designed with emphasis on ease of use by the system planning personnel or other designated staff. The program shall be capable of sharing results offline via electronic or hardcopy reports, spreadsheets, etc. The software shall be designed to operate in a power plant environment with a high degree of reliability.

The software should be expandable / compatible with other short and long term planning tools to support evaluation of payback of capital improvement projects, short and long-range maintenance scheduling to minimize opportunity costs, and next day operating decisions.

2A.2 UNIT DESCRIPTIONS. The Purchaser intends to utilize the Production Cost Model Software to evaluate operations of Purchaser's and competitors units within Romania and an Eastern European power market. A summary of the Purchaser's system is listed below.

Parameter	Value
System Demand • Romania • Regional Power Pool • ELCEN	
Number of Units • Nuclear • Hydroelectric • Fossil Steam • Combined Cycle • Combustion Turbine • Other	
Gross Generation • Nuclear • Hydroelectric • Fossil Steam • Combined Cycle • Combustion Turbine • Other	

2A.3 GENERAL SOFTWARE REQUIREMENTS. The Production Cost Model Software unit shall be designed to operate using the Windows ___ or ___ operating system. For ease of use, the Production Cost Model Software shall also be designed to have the appearance of standard Windows applications. The graphical user interface (GUI) shall allow quick and easy navigation through the system. The GUI shall be consistent among all screen displays and tools to the maximum extent possible. Normal user interaction with the system shall be through the use of a mouse or keyboard.

Any required site license fees for the Production Cost Model Software shall be included as part of the services to be provided by the Contractor under this Contract. All software updates issued by the Contractor within the first year after will be included in the initial purchase price and will be installed by the Purchaser, as soon as the updated software has been extensively beta tested and is available for distribution and use. Any third party software required by the Production Cost Model Software (with the exception of the Windows ___ or UNIX based operating system) shall be included in the initial purchase price of the system and shall be covered by the warranty.

2A.4 GENERAL HARDWARE REQUIREMENTS. The system for each unit shall be installed on a separate Windows ___ or UNIX based computer provided by the Purchaser. Minimum and recommended hardware requirements will be provided by the Supplier as specified in Section BD-2 of this specification.

2A.5 INSTRUMENTATION. Unless specified otherwise in other sections, all instrumentation components furnished with the equipment shall be constructed to withstand the temperatures, pressures, and corrosive conditions encountered in the actual service. Instruments rated for hazardous area classifications shall be furnished where required by applicable code or the detailed specifications.

2A-6 CONTROL POWER. Electrical power for control and instrumentation will be a nominal 240 volt, single-phase, 50 hertz, alternating current. The Contractor shall provide any devices required for proper operation and protection of the equipment during electrical power supply and ambient temperature fluctuations described in the following paragraphs.

2A.7 TRAINING. At the Purchasers election, optional on-site training shall be provided to personnel who will be responsible for installing, operating and maintaining the Production Cost Model Software. Training sessions shall be customized to fit the needs of each user, including systems planning personnel, engineers, supervisors, and managers. Each class participant shall be provided with training materials intended for reference and instructional purposes. A description of the training program, schedule and duration of training sessions shall also be provided in the Contractor's proposal. All training material shall be reviewed and approved by the Purchaser.

The Contractor shall also include a CD-ROM disk containing all training documents.

2A.8 TECHNICAL SUPPORT. The Contractor shall have technical support available in accordance with the following subsections.

2A.8.1 Telephone Support. The Contractor shall have technical support available during normal business hours. The Contractor shall have the ability when necessary to support the system via modem or network dial up during business hours.

2A.8.2 On-Site Support. The Contractor shall provide on-site support in accordance with the term of Section 1A.5.2 Contractor's Field Technical Services. Labor and expenses for other Purchaser requested on-site support will be provided in accordance with the rates specified in Section D Cost Proposal.

FINANCIAL PROPOSAL

ELCEN

PRODUCTION COST MODEL SOFTWARE

RFP NO. [redacted]
PROJECT [redacted]

BID ISSUE
(REV [redacted])

building a world of difference™ | BLACK & VEATCH

FP - FINANCIAL PROPOSAL

FP.1 TOTAL FIRM PRICE. Contractor shall provide a total firm price for all materials, labor and services covered by under the base proposal. All prices shall be specified Euro.

TOTAL FIRM PRICE _____

FP.2 PRICE BREAKDOWN. Contractor shall provide a price breakdown as follows for all items included in the base and optional scope of service. All prices shall be specified in Euro.

Item	Price
Software License Fee	
Annual Maintenance Fee	
Users Group Membership Fee	
Onsite Training	
On-Site Engineering/Startup Services	
Total Man-Days in On-Site Engineering/Startup Services	Man-Days
Total Man-Days in On-Site Training	Man-Days
Other Optional Services (describe) a) b) c) d)	

FP.3 LABOR RATES. Contractor shall provide a labor rates by position applicable to the project. All rates shall be specified in Euro per man-hour. All expenses shall be at actual cost.

Position	Straight Time	Overtime	Sundays & Holidays
Project Manager			
Project Engineer			
Engineer			
Planner			
IT Specialist			
Administrative Support			
Contractors Field Technical Services Personnel			
Other (As defined by Contractor)			

FP.4 EXCEPTIONS TO THE SPECIFICATION. The Contractor shall certify that he agrees to all provisions of the Specification and Bid Documents and clearly list any exceptions under the title of EXECPTIONS in the Proposal. Bidder's terms and conditions are not considered specific exceptions. If exceptions are taken, identify the page(s) of the proposal that apply.

FP.5 SUBCONTRACTORS. This bid is based upon the use of the following subcontractors:

Trade	Subcontractor

All technical requirements and all commercial terms and requirements must be followed by all subcontractors as well as by the Contractor.

SIGNATURE OF BIDDER

Corporation Name: _____

By Authorized Person: _____

Title: _____

Business Address: _____

SPECIFICATIONS
AND
DOCUMENTS

ELCEN

GENERATING PLANT NAME

COMPUTERIZED MANTENANCE MANAGEMENT SYSTEM

RFP NO. _____
PROJECT _____

BID ISSUE
(REV 0)

building a world of difference™ | BLACK & VEATCH

TABLE OF CONTENTS

	Page
A - GENERAL INFORMATION	
A.1 INSTRUCTIONS TO BIDDERS	A-1
A.2 RIGHT TO REJECT	A-1
A.3 VALIDITY	A-1
A.4 PROJECT PROCEDURES	A-1
A.4.1 Correspondence	A-1
A.4.2 Project Team	A-1
A.4.3 Scope Change Document	A-2
A.4.4 Invoicing	A-2
A.4.5 Warranty	A-2
A.4.6 Performance Guarantee	A-3
A.4.7 Acceptance Documentation	A-3
A.4.8 Insurance	A-3
B – BID DATA	
B.1 GENERAL	B-1
B.2 COMPUTERIZED MAINTENANCE MANAGEMENT SYSTEM DATA	B-1
Section 1A – SCOPE OF WORK	
1A.1 GENERAL	1A-1
1A.2 WORK INCLUDED UNDER THIS SPECIFICATION	1A-1
1A.2.1 Miscellaneous Materials and Services	1A-1
1A.3 WORK NOT INCLUDED UNDER THIS SPECIFICATION-	1A-1
1A.4 WORK INCUDED AS OPTIONS UNDER THIS SPECIFICATION-	1A-2
1A.5 CONTRACTOR'S SERVICES	1A-2
1A.5.1 Submittal of Engineering Data	1A-2
1A.5.2 Contractor's Field Technical Services	1A-2
1A.5.3 Implementation Conference	1A-2
1A.6 LANGUAGE, NUMBERS, AND SYMBOLS	1A-3
Section 1B – DESIGN DATA AND DRAWINGS	
1B.1 GENERAL	1B-1
1B.2 CORRESPONDENCE	1B-1
1B.3 REVIEW OF ENGINEERING DATA	1B-1
1B.4 DESIGN DATA	1B-1
1B.5 DRAWINGS & OTHER CONTRACTOR PREPARED MATERIAL	1B-1
1B.5.1 Drawing & Material Submittal	1B-2
1B.5.2 Final Markup Drawings	1B-2
1B.6 INSTRUCTION MANUALS/DOCUMENTATION	1B-2

Section 1C– SCHEDULE

1C.1 GENERAL	1C-1
1C.2 SCHEDULE	1C-1
1C.3 PRELIMINARY SCHEDULE	1C-1
1C.4 CONTRACTOR'S DETAILED SCHEDULE	1C-1

Section 1D – OTHER REQUIREMENTS

1D.1 GENERAL	1D-1
1D.2 REFERENCED STANDARDS	1D-1
1D.2.1 List of References	1D-2
1D.3 MATERIALS	1D-2
1D.4 IDENTIFICATION	1D-2
1D.5 SHIPMENTS	1D-2
1D.6 SHIPPING NOTICE	1D-3
1D.7 MATERIALS LIST	1D-3
1D.8 CORRECTION OF ERRORS	1D-3
1D.9 QUALITY ASSURANCE	1D-3

Section 2A – TECHNICAL REQUIREMENTS

2A.1 GENERAL INTENTION	2A-1
2A.2 UNIT DESCRIPTIONS	2A-1
2A.3 GENERAL SOFTWARE REQUIREMENTS	2A-1
2A.4 GENERAL HARDWARE REQUIREMENTS	2A-2
2A.5 INSTRUMENTATION	2A-2
2A.6 CONTROL POWER	2A-2
2A.7 TRAINING	2A-2
2A.8 TECHNICAL SUPPORT	2A-2
2A.8.1 Telephone Support	2A-2
2A.8.2 On-Site Support	2A-2
Section 3A – INSTALLATION AND CONSTRUCTION	Not Used

A - GENERAL INFORMATION

It is ELCEN's intention to purchase a comprehensive Computerized Maintenance Management System (CMMS) to support a wide variety of maintenance related activities at _____ Power Station. _____ Power Station consists of (DESCRIBE THE NUMBER AND SIZE OF THE UNITS). Activities to be supported by the CMMS include:

- Maintenance planning, scheduling and tracking including resource and material management.
- Equipment Asset Content Management including key data such as manufacturer, model number, equipment tag number, dimensions, weight, normal and design operating conditions, special conditions/requirements, etc.
- Inventory management including consumables, spare parts, etc.
- Work order generation.
- Requisition and purchase order generation.
- Cost center accounting.
- Equipment history including operating history, failures, condition assessments, troubleshooting, maintenance, etc.
- Reporting.

A.1 INSTRUCTIONS TO BIDDERS. The Contractor shall provide a complete proposal detailing but not necessarily limited to a description of the services, exceptions and/or clarifications to the proposal, fees, rate structures, and terms and conditions which will govern the project. The Contractor will provide a description of the work package. THE PROPOSAL SHALL INCLUDE THE ESTIMATED MAN-HOURS AND ASSOCIATED COSTS FOR THE PROJECT; THE COSTS SHALL BE CONSIDERED AS FIRM PRICE, WITH NO INCREASES BEING ALLOWED EXCEPT FOR AUTHORIZED CHANGED IN THE SCOPE OF WORK.

A.2 RIGHT TO REJECT. The right is reserved by ELCEN to reject any or all proposals. In addition, ELCEN may elect to cancel the project if it is determined necessary by ELCEN or if funding is not available.

A.3 VALIDITY. Bidder's proposal shall remain valid for a period of _____ (__) days commencing on the proposal date.

A.4 PROJECT PROCEDURES. The following items and services shall be furnished as optional work under this specification:

A.4.1 Correspondence. All correspondence and documents from the Contractor to ELCEN during the proposal process shall be addressed to:

Type name and address of ELCEN's contacts here.

After award, a formal distribution list for letters, transmittals, etc. will be created.

A.4.2 Project Team. The Contractor shall have a dedicated Project Manager responsible for the coordination of all project related activities. The Project Manager identified for this project by the Contractor shall remain in that position throughout the project. Any changes in this key position shall be with the approval of ELCEN.

The Contractor shall include resumes of personnel who would be assigned to the project, project team organization, job descriptions, project experience, and other information that is considered pertinent.

ELCEN reserves the right to request personnel changes if performance/experience becomes an issue.

A.4.3 Scope Change Document . For any modified scope changes or additions to the Contractor work, the Contractor will provide written notification per the contract procedure. ELCEN reserves the right to have any extra work performed on a firm price, not-to-exceed or cost-plus basis. The Contractor will submit with his proposal a complete rate structure applicable to any work to be performed under this agreement.

The Scope Change Document shall describe the reason for change, the person who requested the change, the original scope and man-hour cost, and the new scope and man-hour cost.

Each Scope Change Document shall be consecutively numbered. Any effects on the engineering schedule and overall project schedule shall be described. **WRITTEN APPROVAL FROM ELCEN IS REQUIRED BEFORE PROCEEDING WITH THE SCOPE CHANGE.**

A.4.4 Invoicing. The Contractor's proposal is to include a description of their invoicing procedures. ELCEN will issue a purchase order to the selected Contractor. Invoices not complete in reference or lacking in backup information will be rejected.

Progress and/or milestone based payments will be made in an amount equal to ( ) percent of Work completed with the balance being retainage.

Final payment will be made upon completion and acceptance of the work. Retainage will be paid after all submittals have been received and accepted following final payment.

A.4.5 Warranty. The Contractor shall provide a warranty on all the hardware, software and services rendered to ensure that the Fuel Quality Impact Software meets the following requirements:

Be free from defects in design, material, workmanship and title;

Be of the kind, quality and capability designated or described in the Contract;

Perform in the manner set forth in or required by the Contract; and

Have been produced processed, delivered and sold or licensed in conformity with all applicable federal, state and local laws, administrative regulations and orders. The Contractor shall execute, certify and deliver to ELCEN any documents as may be required to effect or evidence compliance with such federal, state and local laws.

Except for consumable items, the warranty period shall be _____.

During the warranty period, the Contractor shall provide free of charge telephone support for ELCEN users and remote support for Software imperfections.

A.4.6 Performance Guarantee. The performance guarantee shall be in the form of a bank letter of credit for 10% of the contract value, valid until receipt and approval of the Acceptance Documentation; or by retention of 10% of the amount of each invoice, retention to be paid upon receipt and approval of the Acceptance Documentation. If in the form of a bank letter of credit, the performance guarantee should be issued by a bank in Romania, or by a bank abroad with a correspondent in Romania.

A.4.7 Acceptance Documentation. The Contractors shall provide to the Purchaser the Acceptance Documentation (at the end of executions works, at the end of commissioning, at the end of the guarantee period) in accordance with the Romanian legislation in force.

A.4.8 Insurance. The Contractor shall provide full insurance of all software, hardware, etc, against losses or damages during execution, transportation, storage, testing, and commissioning.

B - BID DATA

B.1 GENERAL. Each Bidder shall submit complete and definitive information on his proposal offering in sufficient detail to permit a complete technical analysis of the Proposal.

The requirements for information contained in this Section are basic. Additional information shall be provided as requested by the Purchaser.

The scope of supplementary information and equipment data requested herein shall be included in the Proposal to the fullest extent possible at the time of bid submittal. As a minimum, sufficient proposal data shall be submitted to demonstrate compliance with this specification, and to allow a comprehensive evaluation of the bid. Proposals lacking sufficient data to satisfy these requirements will be considered non-responsive. The successful Bidder shall complete all data submittal requests and Proposal data entries for inclusion in the Purchase Order documents prior to the Award of Contract.

B.2 COMPUTERIZED MAINTENANCE MANAGEMENT SYSTEM DATA. Submit Data required on the following pages. Where options are indicated in the PROPOSAL FORM or BID DATA, provide complete information for each option.

Entries on the BID DATA forms shall be entered electronically in the MS Word file contained on the CD-ROM or diskette included with this specification. A hardcopy of the BID DATA will be included with each proposal. Electronic copies of the BID DATA file will be provided along with the required numbers of proposals.

Electronic copies of the files may be submitted by CD-ROMs or 3.5 inch diskette. Electronic copies submitted with the proposal will be virus checked and will be certified to be virus free.

REQUIREMENT DESCRIPTION	CONTRACTOR RESPONSE
GENERAL	
Describe the typical software implementation strategy.	
Describe in detail the assistance you will need from the Purchaser's staff in the installation and implementation of the software package. What are the tasks the plant staff must perform in the data gathering, parametric testing, system development and initial installation of the system? Include an estimate of hours per week involvement by plant staff.	
Detail the terms under which source code will be made available for exclusive purpose of self-maintaining the optimization system software.	
How much on-site support time will you provide during system installation and tuning in preparation for on-line operation? Describe and identify the make-up of the optimal project team including individual skill sets.	
Describe your on-going support (e.g., Help Desk, hot line, newsletters, user groups, internet, e-mail, etc.). Describe your procedure for problem resolution. What are the lead time requirements and criteria for on-site technical support?	
Would you use third party contractors or subcontractor for any of the services required under the specification? If so, for what parts of the project?	
Can Purchaser's staff modify the underlying data tables? Explain.	
Can Purchaser's staff add / delete equipment items, modify reports, etc.	
What is the nature of outside help needed by plant staff to add new equipment items, data inputs, etc.?	
What is the nature of outside help needed by plant staff to maintain the existing software?	
What is the nature of outside help needed by plant staff to update the existing software? (i.e., new version release)	
Is there a User's Group. If yes, please indicate the number of members.	
Number of current software users.	
Describe the overall system architecture including system size, redundancies, I/O quantity (if applicable), interfaces with other systems, UPS requirements / type (if applicable), backup requirements, list of equipment, etc.	

REQUIREMENT DESCRIPTION	CONTRACTOR RESPONSE
SOFTWARE DESCRIPTION	
Describe the type of software application (i.e. standalone program, network installation, application service provider (ASP), etc.).	
Windows is the preferred operating system. What operating systems are supported (i.e. Windows NT, Windows XP, etc.) by the software?	
List the minimum and recommended hardware requirements. • Processor • RAM • Hard Drive Size • Network Card (Ethernet, LAN, TCP/IP Protocal, etc.) • Monitor Size • Printer Requirements • Modem Requirements	
How many users (seats) are supported with a single software license?	
What is the current version number and release date? How often are updates issued?	
The Purchaser intends to enter data using SI units of measure. Does the software support SI?	
What languages are currently supported by the software?	
If not currently available, can a Romanian language version be developed?	
Describe the documentation that will be provided with the software.	
INPUT REQUIREMENTS	
How is input data entered and stored?	
What types of equipment are supported. ?	

REQUIREMENT DESCRIPTION	CONTRACTOR RESPONSE
What input data is required?	
What input data is optional?	
Does the software have the ability to default missing information?	
Is there a limit to the number of equipment items that can be stored or evaluated within the software?	
Does the software support collection and storage of key equipment information such as dimensions, weight, drawings, normal/nominal operating parameters, minimum and maximum operating conditions, special maintenance or operating conditions imposed by manufacturer, etc.? Describe.	
OUTPUT DATA	
How are output reports, schedules, results, etc. stored?	
How are results displayed? What is included in the standard output?	
Describe the type of results that can be displayed and level of detail available for each type of output.	
How are program errors identified and reported to the user?	
Describe how information stored within the CMMS can be shared outside of the software (reports, spreadsheets, etc.).	
What other software tools are recommended or required for use with the proposed Computerized Maintenance Management System?	
Can the output be customized by the user?	

REQUIREMENT DESCRIPTION	CONTRACTOR RESPONSE
OPTIONAL SERVICES	
Please describe any optional services which are recommended or can be provided on an as-needed basis including the following: • On-site training. • On-site collection and data entry • Program customization (input screens, output, etc.) • Other	

Section 1A - SCOPE OF WORK

1A.1 GENERAL. This section covers the general description, scope of work, and supplementary requirements for the work included under this specification.

It is ELCEN's intention to purchase a comprehensive Computerized Maintenance Management System (CMMS) to support a wide variety of maintenance related activities at _____ Power Station. _____ Power Station consists of (DESCRIBE THE NUMBER AND SIZE OF THE UNITS Activities to be supported by the CMMS include:

- Maintenance planning, scheduling and tracking including resource and material management.
- Equipment Asset Content Management including key data such as manufacturer, model number, equipment tag number, dimensions, weight, normal and design operating conditions, special conditions/requirements, etc.
- Inventory management including consumables, spare parts, etc.
- Work order generation.
- Requisition and purchase order generation.
- Cost center accounting.
- Equipment history including operating history, failures, condition assessments, troubleshooting, maintenance, etc.
- Reporting.

The work included under this specification shall be supplied FOB PLANT NAME, PLANT LOCATION.

1A.2 WORK INCLUDED UNDER THIS SPECIFICATION. The work performed by the Contractor shall be to furnish and install Computerized Maintenance Management Software at the _____ Generating Station. Items or services to be quoted as options to the base bid are listed under WORK INCLUDED AS OPTIONS UNDER THIS SPECIFICATION.

All computer software and documentation shall be furnished by the Contractor as specified by the Purchaser in this specification.

1A.2.1 Miscellaneous Materials and Services. Miscellaneous materials and services not otherwise specifically called for shall be furnished by the Contractor in accordance with the following:

> All supporting third-party software with the exception of the Windows operating system software required to install and operate of the Computerized Maintenance Management System on the designated Owner's workstation(s).

1A.3 WORK NOT INCLUDED UNDER THIS SPECIFICATION. The following items of work will be furnished by the Purchaser (unless furnished as part of optional work under WORK INCLUDED AS OPTIONS UNDER THIS SPECIFICATION):

Miscellaneous services and materials specified as furnished by the Purchaser.

Computer hardware.

Personnel to collect and input CMMS related data.

Personnel to conduct parametric testing of software based on Contractor's test plan.

1A.4 WORK INCLUDED AS OPTIONS UNDER THIS SPECIFICATION. The following items and services shall be furnished as optional work under this specification:

On-site training of staff in the installation and operation of the software on one or more designated workstations.

Data collection and input.

Interfaces to specific legacy systems identified by Purchaser.

Customized output reporting based on ELCEN specific requirements identified following user training and familiarization.

1A.5 CONTRACTOR'S SERVICES. The services called for in WORK INCLUDED UNDER THIS SPECIFICATION and the services inherent to any options purchased by the Purchaser as called for in WORK INCLUDED AS OPTIONS UNDER THIS SPECIFICATION shall be in accordance with the following.

1A.5.1 Submittal of Engineering Data. Drawings and other engineering data for the specified equipment and materials are essential to the design and implementation of the entire project. The Contractor shall submit drawings and engineering data in accordance with the schedule and requirements specified herein to assure compliance with the overall installation and operating schedule.

1A.5.2 Contractor's Field Technical Services. The Contractor shall furnish the services of one or more technical service representatives when requested by the Purchaser. The service representatives shall be technically competent and experienced in the installation and operation of the system, and authorized by the Contractor to perform the work stipulated. The Contractor's technical representative shall be responsible for all on-site work.

As part of the base scope of the work, the Contractor's technical service representatives shall provide periodic assistance and direction to the Purchaser and shall review the computer hardware and software setup with the Purchaser after installation and identify any recommended changes or adjustments to assure proper operation.

As an optional service, the Contractor's technical service representative shall be available to support data collection, data input, and acceptance testing. The technical service representative shall instruct the plant personnel in the proper operation of the system.

1A.5.3 Implementation Conference. The Contractor's technical service representative shall attend an implementation conference at a time and place selected by the Purchaser to discuss matters relative to the execution of this Contract. The Contractor's technical service representative shall attend additional conferences as required by the Purchaser thereafter to expedite the work.

1A.6 LANGUAGE, NUMBERS, AND SYMBOLS.

All the documents of the offer and before signing the contract shall be in English. After signing the contract, all drawings, designs, specifications, manuals, operating instructions, statements, schedules, notices, documents, nameplates, and markings shall be in both the English and Romanian languages. All graphics developed by the Contractor shall be in the Romanian language. Windows operating system graphics may be supplied in English if a Romanian version is not available.

All units of measurement shall be stated in the SI - system. The Contractor shall further be required to employ in all drawings and submittals the same symbols and designations as are used by the Purchaser.

Section 1B – DESIGN DATA AND DRAWINGS

1B.1 GENERAL. This section stipulates the requirements for engineering data, software documentation, or other materials which the Contractor may submit for review.

1B.2 CORRESPONDENCE. Correspondence on all technical matters shall be addressed to the Purchaser as follows:

ELCEN
UTILITY ADDRESS

Attention: CONTACT NAME

Correspondence on all procedural and commercial matters shall be addressed to the Owner's Representative as follows:

ELCEN
UTILITY ADDRESS

Attention: ELCEN CONTACT NAME

Letters of transmittal shall accompany submittals of engineering data, software documentation or other materials and shall include a list of the items included in the transmittal. Correspondence shall be identified with the project name and plant name. Transmittal of drawings and data shall be as specified in the article entitled DRAWINGS & OTHER CONTRACTOR PREPARED MATERIALS.

1B.3 REVIEW OF ENGINEERING DATA. The Purchaser's review of engineering data will cover only general conformity of the data to the specifications and documents, external connections and interfaces with existing equipment. This review does not indicate a thorough review of all dimensions, quantities, and details of the equipment, material, device, or item indicated or the accuracy of the information submitted. This review shall not be construed as relieving the Contractor from any responsibility for errors or deviations from the requirements of the contract documents.

1B.4 DESIGN DATA. The following design data shall be submitted as scheduled in Section 1C, unless otherwise specified:

List of minimum and recommended hardware requirements.

Itemized list of software inputs requirements and options including equipment configuration, equipment history, inventory and economic variables.

1B.5 DRAWINGS & OTHER CONTRACTOR PREPARED MATERIALS. It is not anticipated that any Contractor-prepared drawings will be required for this project. However, any Contractor-prepared drawings or other Contractor prepared materials shall be sufficient detail to indicate the arrangement, description, operation or use of the materials for the information specifically requested in the submittal schedule specified in Section 1C.

1B.5.1 Drawing & Material Submittal. ____ (__) copies of the drawings and /or other contractor prepared materials shall be submitted to the Purchaser as follows:

____ copies to:
ELCEN
Address

Attention: Contact

Markups reviewed by the Purchaser will be returned to the Contractor with corrections or exceptions clearly marked. The Contractor shall make the changes noted thereon and copies of the corrected drawings or data shall be submitted for review in the same manner as the original submittal.

When the drawings or other Contractor prepared materials are returned to Contractor with no corrections or exceptions noted the Contractor shall submit versions for final distribution as specified hereinafter under Final Markup Drawings and Contractor Prepared Materials..

No work shall be performed in connection with the installation of equipment, materials, computer hardware and software until the drawings and data have been reviewed by the Purchaser except at the Contractor's own risk and responsibility. Work may proceed on equipment, materials, computer hardware and software when the drawings and data therefore have been returned with no corrections or exceptions noted; or when drawings have been returned with corrections or exceptions noted, provided the work is performed in accordance with the Purchaser's notations.

If changes are made at the project site to the equipment to correct installation errors, due to design changes or wiring revisions, revised drawings indicating the changes made shall be prepared and submitted to the Purchaser..

1B.5.2 Final Markup Drawings & Materials. After receipt from the Purchaser of drawings or other Contractor prepared materials with no corrections or exceptions noted, the Contractor shall transmit ____ (__) copies to the Purchaser for final distribution.

1B.6 INSTRUCTION MANUALS/DOCUMENTATION. The Contractor shall furnish instruction manual and documentation bound in a binder suitable for long term rough usage. Front covers of the manuals shall be permanently marked with lettering indicating Owner's name, plant name, name of software and name of manufacturer.

The manuals shall include the following information specific to each version of the software supplied by the Contractor:

- Table of Contents and index tabs.
- Name, address, telephone number, and fax number of the local and national service representative and supplier and 24 hour emergency service contact.
- Specifications including minimum and recommended hardware requirements.
- Description of the software.
- Installation instructions.
- Operating instructions.
- Software troubleshooting guidelines.
- Data backup and recovery guidelines.

The above listed requirements are the minimum. Additional information that is necessary for proper installation, operation and utilization of the software shall also be included.

One copy of the instruction manual shall be submitted to the Purchaser for review. After the manual has been approved, the final ____ ( ) copies should be sent to the Owner.

Section 1C - SCHEDULE

1C.1 GENERAL. This section covers the schedule and scheduling requirements for performance and completion of the work included under this Contract.

1C.2 SCHEDULE. Milestone, payment and delivery schedules are defined below. The completion dates indicated are essential to the work under this Contract and to the coordination and continuity of other Purchaser work activities..

The listing of activities and dates is not intended to be a complete or detailed listing of all work under this Contract or of all interfaces with the work of other contractors.

It is understood and agreed that the dates shown within the Milestone and the Payment and Delivery Schedules are the latest feasible completion dates and that earlier dates may be attained as agreed to by the Purchaser and the Contractor.

Milestone	Date
Issue Request For Proposal	
Receive Bidder Responses to RFP Including Detailed Data Input Requirements	
Contract Award	
Software Installation	
Software Training	
Software Acceptance Testing	
(Optional) Data Collection	
(Optional) Data Entry	
(Optional) Report Development	

1C.3 PRELIMINARY SCHEDULE. The Contractor shall submit, as part of his proposal, a preliminary schedule of the work. This preliminary schedule shall include a bar chart showing all major activities. The Contractor shall also submit with his proposal a work plan, which describes the activities in sufficient detail to clearly show his understanding of the concentrated effort and coordination required to complete the work by the scheduled contract completion date.

1C.4 CONTRACTOR'S DETAILED SCHEDULE. Within 5 days after the date of contract award, the Contractor shall submit a detailed schedule. The detailed schedule shall be based upon the dates specified in the schedule included herein.

The detailed schedule shall be in bar graph form acceptable to the Purchaser.

The detailed schedule shall contain all activities of the plan, including acquisition of special equipment, materials, computer hardware, and computer software. For all equipment and materials supplied by the Contractor especially for this project, the schedule shall include the sequence of activities including issuance of purchase orders, preparation of drawing markups and delivery. Each activity shall be identified

on the schedule by a descriptive title and shall be assigned an estimated number of working days required and an expected completion date.

Schedules returned to the Contractor for revision or correction shall be resubmitted for review within ___ calendar days. Upon acceptance by the Purchaser of the detailed schedule of activities, the Contractor will be responsible for maintaining such schedule.

Section 1D - OTHER REQUIREMENTS

1D.1 GENERAL. These requirements apply in general to all equipment, computer hardware, and software and are supplementary to the technical requirements. If requirements specified herein are in conflict with the requirements specified in the technical requirements, the technical requirements shall govern to the extent of such conflict.

The Contractor's proposal shall be based upon the use of equipment and materials complying fully with the requirements specified in this Section. It is recognized that the Contractor may have standardized on the use of certain components, materials, processes, or procedures different than those specified herein. Alternates in addition to the base proposal on the basis of supplying the Contractor's standard components, materials, processes, or procedures will be considered. The alternate proposal shall clearly stipulate the alternate proposed, the specific exceptions to the specification, and the price change applicable for supplying such alternate.

1D.2 REFERENCED STANDARDS. Reference to the standards of any technical society, organization, or association, or to the laws, ordinances, or codes of governmental authorities shall mean the latest standard, code, or specification adopted, published, and effective at the date of taking bids unless specifically stated otherwise in this specification.

The specifications, codes, and standards referenced in this specification (including addenda, amendments, and errata) shall govern in all cases where references thereto are made except where they conflict with this specification. In case of conflict between the referenced specifications, codes, or standards and this specification, the latter shall govern to the extent of such difference.

All engineered equipment manufactured under this specification and the associated engineering for the manufacture shall be in accordance with the codes and standards detailed in the specification sections and the following codes and standards.

For engineered equipment manufactured under this specification and the associated engineering for that engineered equipment, reference in these specifications is made to only USA standards, codes, and specifications, and the equipment, materials, and workmanship furnished under these specifications shall be in accordance with the standards, code, or specification designated. Equivalent standards, codes and specifications of other authorities will be considered when submitted to the Purchaser or Owner's Representative in the English language. If the proposed substitute standards, codes, or specifications are acceptable to the Purchaser and the Owner's Representative, their use will be authorized in writing. In the event the substitute standards, codes, or specifications are not acceptable, the work shall proceed in accordance with USA standards, codes, and specifications designated in the specifications.

All materials furnished and installation procedures used under this specification shall conform with accepted good engineering practice, the codes and standards detailed in the specification sections, and the requirements of the applicable Romanian standards.

1D.2.1 List of References. All engineered equipment, engineering, materials, and installation provided under this specification shall be in accordance with the following codes and standards.

Works	**In Accordance With**
Software Development & Testing	ISO 9001 Guidelines

1D.3 MATERIALS. Unless specifically provided otherwise in each case, all materials, equipment, computer hardware, and computer software furnished for permanent installation shall conform to applicable standard specifications and shall be new, unused, and undamaged.

1D.4 IDENTIFICATION. All shipping notices, computer hardware and software, and other documents pertaining to the equipment and materials furnished under this specification shall be identified as follows:

ELCEN
ADDRESS

Attention: CONTACT NAME

1D.5 SHIPMENTS. All shipments shall be F.O.B. destination, freight allowed.

The Contractor shall discuss with the Purchaser the routing of shipments and shall route the same as indicated by the Purchaser provided freight rates are no greater than by other routes. Shipments are accepted Monday through Friday from _____ a.m. to _____ p.m.

All shipments shall be delivered to:

ELCEN
PLANT ADDRESS

Attention: CONTACT NAME

The equipment shall be shipped boxed, crated, or otherwise protected against damage during shipment, handling, and storage at the Project Site. Openings shall be closed with caps, plugs, or other suitable closure devices suitable for rough usage.

Packaging shall be suitable to prevent moisture or water damage during shipment and outdoor storage at the Project Site.

The shipping forms must include the following content:

- Fiscal bill (invoice);
- Shipping notice;
- Certificate of origin;
- Factory testing certificate;
- Quality and conformity certificate;
- Guarantee certificate;
- EUR certificate;
- Transport certificate;
- Import statement value;
- Insurance policy-"for all risks"

1D.6 SHIPPING NOTICE. The Contractor shall submit to the Purchaser duplicate copies of shipping notices describing each shipment of material, equipment, computer hardware, or software. Climate control requirements shall be included. The shipping notices shall be mailed to arrive approximately ___ days ahead of the estimated shipment arrival. The addressee for each shipping notice will be CONTACT NAME.

1D.7 MATERIALS LIST. The Contractor shall prepare and submit with the first shipping notice duplicate copies of an itemized materials list covering all material, equipment, computer hardware and software furnished under this specification. The materials list shall be in sufficient detail to permit an accurate determination of the completion of shipment.

1D.8 CORRECTION OF ERRORS. Equipment and materials shall be complete in all respects within the limits herein outlined. All errors or omissions required to be corrected in the field shall be done by the Contractor or his duly authorized representative at the Contractor's expense.

1D.9 QUALITY ASSURANCE. The Contractor shall maintain a quality assurance program that provides that equipment, materials, and services under this specification whether manufactured or performed within the Contractor's plant or at any other source shall be controlled at all points necessary to assure conformance to contractual requirements. The program shall provide for the prevention and ready detection of discrepancies and for timely and positive corrective action. The Contractor shall make objective evidence of quality conformance readily available to the Purchaser. Instructions and records for quality assurance shall be controlled.

Section 2A – TECHNICAL REQUIREMENTS

2A.1 GENERAL INTENTION. It is the intention of the Purchaser to purchase a comprehensive Computerized Maintenance Management System to support a wide variety of maintenance related activities at _____ Power Station. _____ Power Station consists of (DESCRIBE THE NUMBER AND SIZE OF THE UNITS). Activities to be supported by the CMMS include:

- Maintenance planning, scheduling and tracking including resource and material management.
- Equipment Asset Content Management including key data such as manufacturer, model number, equipment tag number, dimensions, weight, normal and design operating conditions, special conditions/requirements, etc.
- Inventory management including consumables, spare parts, etc.
- Work order generation.
- Requisition and purchase order generation.
- Cost center accounting.
- Equipment history including operating history, failures, condition assessments, troubleshooting, maintenance, etc.
- Reporting.

Client software must be capable with PC based workstations utilizing the Windows ____ operating system(s). The system shall be designed with emphasis on ease of use by the plant operations, maintenance and engineering personnel, and other designated staff. The software shall be designed to operate in a power plant environment with a high degree of reliability.

2A.2 UNIT DESCRIPTIONS. The Owner intends to utilize the Computerized Maintenance Management System to evaluate the cost and performance impacts of better maintenance practices at the following generating units. A summary of key unit variables is included below.

Plant / Unit No.	Gross MW Rating	Fuel Type	Boiler Type	Emission Control Equipment

2A.3 GENERAL SOFTWARE REQUIREMENTS. The Computerized Maintenance Management System unit shall be designed to operate using the Windows ___ or ___ operating system. For ease of use, the Computerized Maintenance Management System shall also be designed to have the appearance of standard Windows

applications. The graphical user interface (GUI) shall allow quick and easy navigation through the system. The GUI shall be consistent among all screen displays and tools to the maximum extent possible. Normal user interaction with the system shall be through the use of a mouse or keyboard.

Any required site license fees for the Computerized Maintenance Management System shall be included as part of the services to be provided by the Contractor under this Contract. All software updates issued by the Contractor within the first year after will be included in the initial purchase price and will be installed by the Purchaser, as soon as the updated software has been extensively beta tested and is available for distribution and use. Any third party software required by the Computerized Maintenance Management System (with the exception of the Windows based operating system) shall be included in the initial purchase price of the system and shall be covered by the warranty.

2A.4 GENERAL HARDWARE REQUIREMENTS. The software shall be installed on one or more Windows based computer(s) provided by the Purchaser. Minimum and recommended hardware requirements will be provided by the Supplier as specified in Section BD-2 of this specification.

2A.5 INSTRUMENTATION. Unless specified otherwise in other sections, all instrumentation components furnished with the equipment shall be constructed to withstand the temperatures, pressures, and corrosive conditions encountered in the actual service. Instruments rated for hazardous area classifications shall be furnished where required by applicable code or the detailed specifications.

2A-6 CONTROL POWER. Electrical power for control and instrumentation will be a nominal 240 volt, single-phase, 50 hertz, alternating current. The Contractor shall provide any devices required for proper operation and protection of the equipment during electrical power supply and ambient temperature fluctuations described in the following paragraphs.

2A.7 TRAINING. At the Purchasers election, optional on-site training shall be provided to personnel who will be responsible for installing, operating and maintaining the Computerized Maintenance Management System. Training sessions shall be customized to fit the needs of each user, including operators, engineers, supervisors, and plant managers. Each class participant shall be provided with training materials intended for reference and instructional purposes. A description of the training program, schedule and duration of training sessions shall also be provided in the Contractor's proposal. All training material shall be reviewed and approved by the Purchaser.

The Contractor shall also include a CD-ROM disk containing all training documents.

2A.8 TECHNICAL SUPPORT. The Contractor shall have technical support available in accordance with the following subsections.

2A.8.1 Telephone Support. The Contractor shall have technical support available during normal business hours. The Contractor shall have the ability when necessary to support the system via modem or network dial up during business hours.

2A.8.2 On-Site Support. The Contractor shall provide on-site support in accordance with the term of Section 1A.5.2 Contractor's Field Technical Services. Labor and expenses for other Owner requested on-site support will be provided in accordance with the rates specified in the Financial Proposal.

FINANCIAL PROPOSAL

ELCEN

GENERATING PLANT NAME

COMPUTERIZED MANTENANCE MANAGEMENT SYSTEM

RFP NO. [redacted]
PROJECT [redacted]

BID ISSUE
(REV [redacted])

building a world of difference™ | BLACK & VEATCH

FP – COST PROPOSAL

FP.1 TOTAL FIRM PRICE. Contractor shall provide a total firm price for all materials, labor and services covered by under the base proposal. All prices shall be specified in Euro.

TOTAL FIRM PRICE _____

FP.2 PRICE BREAKDOWN. Contractor shall provide a price breakdown as follows for all items included in the base and optional scope of service. All prices shall be specified in Euro.

Item	Price
Software License Fee	
Installation	
On-site Engineering/Startup Services	
On-site Testing and Reporting	
On-site Training	
Annual Maintenance Fee	
Users Group Membership Fee	
Total Man-Days in On-Site Engineering/Startup Services	Man-Days
Total Man-Days in On-Site Training	Man-Days
Other Optional Services (describe) a) b) c) d)	

FP.3 LABOR RATES. Contractor shall provide a labor rates by position applicable to the project. All rates shall be specified in Euro per man-hour. All expenses shall be at actual cost.

Position	Straight Time	Overtime	Sundays & Holidays
Project Manager			
Project Engineer			
Engineer			
IT Specialist			
Administrative Support			
Contractors Field Technical Services Personnel			
Other (As specified by the Contractor)			

FP.4 EXCEPTIONS TO THE SPECIFICATION. The Contractor shall certify that he agrees to all provisions of the Specification and Bid Documents and clearly list any exceptions under the title of EXECPTIONS in the Proposal. Bidder's terms and

conditions are not considered specific exceptions. If exceptions are taken, identify the page(s) of the proposal that apply.

FP.5 SUBCONTRACTORS. This bid is based upon the use of the following subcontractors:

Trade	Subcontractor

All technical requirements and all commercial terms and requirements must be followed by all subcontractors as well as by the Contractor.

SIGNATURE OF BIDDER

Corporation Name: _____

By Authorized Person: _____

Title: _____

Business Address: _____

SPECIFICATIONS
AND
DOCUMENTS

ELCEN

GENERATING PLANT NAME & UNIT NUMBER

PERFORMANCE MONITORING SYSTEM

RFP NO. _____
PROJECT _____

BID ISSUE
(REV 0)

building a world of difference™ | BLACK & VEATCH

TABLE OF CONTENTS

	Page
A - GENERAL INFORMATION	
A.1 INSTRUCTIONS TO BIDDERS	A-1
A.2 RIGHT TO REJECT	A-1
A.3 VALIDITY	A-1
A.4 PROJECT PROCEDURES	A-1
A.4.1 Correspondence	A-1
A.4.2 Project Team	A-2
A.4.3 Scope Change Document	A-2
A.4.4 Invoicing	A-2
A.4.5 Warranty	A-2
A.4.6 Performance Guarantee	A-3
A.4.7 Acceptance Documentation	A-3
A.4.8 Insurance	A-3
B – BID DATA	
B.1 GENERAL	B-1
B.2 PERFORMANCE MONITORING SYSTEM DATA	B-1
Section 1A – SCOPE OF WORK	
1A.1 GENERAL	1A-1
1A.2 WORK INCLUDED UNDER THIS SPECIFICATION	1A-1
1A.2.1 Miscellaneous Materials and Services	1A-1
1A.3 WORK NOT INCLUDED UNDER THIS SPECIFICATION-	1A-1
1A.4 WORK INCUDED AS OPTIONS UNDER THIS SPECIFICATION-	1A-2
1A.5 CONTRACTOR'S SERVICES	1A-2
1A.5.1 Submittal of Engineering Data	1A-2
1A.5.2 Contractor's Field Technical Services	1A-2
1A.5.3 Implementation Conference	1A-3
1A.6 LANGUAGE, NUMBERS, AND SYMBOLS	1A-3
Section 1B – DESIGN DATA AND DRAWINGS	
1B.1 GENERAL	1B-1
1B.2 CORRESPONDENCE	1B-1
1B.3 REVIEW OF ENGINEERING DATA	1B-1
1B.4 DESIGN DATA	1B-1
1B.5 DRAWINGS & OTHER CONTRACTOR PREPARED MATERIALS	1B-2
1B.5.1 Drawing & Material Submittal	1B-2
1B.5.2 Final Markup Drawings & Materials	1B-3
1B.6 INSTRUCTION MANUALS/DOCUMENTATION	1B-3

Section 1C– SCHEDULE

1C.1 GENERAL	1C-1
1C.2 SCHEDULE	1C-1
1C.3 PRELIMINARY SCHEDULE	1C-1
1C.4 CONTRACTOR'S DETAILED SCHEDULE	1C-1

Section 1D – OTHER REQUIREMENTS

1D.1 GENERAL	1D-1
1D.2 REFERENCED STANDARDS	1D-1
1D.2.1 List of References	1D-2
1D.3 MATERIALS	1D-2
1D.4 IDENTIFICATION	1D-2
1D.5 SHIPMENTS	1D-2
1D.6 SHIPPING NOTICE	1D-3
1D.7 MATERIALS LIST	1D-3
1D.8 CORRECTION OF ERRORS	1D-3
1D.9 QUALITY ASSURANCE	1D-3

Section 2A – TECHNICAL REQUIREMENTS

2A.1 GENERAL INTENTION	2A-1
2A.2 UNIT DESCRIPTIONS	2A-1
2A.3 GENERAL SOFTWARE REQUIREMENTS	2A-2
2A.4 GENERAL HARDWARE REQUIREMENTS	2A-2
2A.5 INSTRUMENTATION	2A-3
2A.6 CONTROL POWER	2A-3
2A.7 TRAINING	2A-3
2A.8 TECHNICAL SUPPORT	2A-3
2A.8.1 Telephone Support	2A-3
2A.8.2 On-Site Support	2A-3
Section 3A – INSTALLATION AND CONSTRUCTION	Not Used

A - GENERAL INFORMATION

It is ELCEN's intention to install a comprehensive Performance Monitoring System for evaluating real time performance of key equipment and overall unit performance. The primary purpose of this software will be to reduce generation costs through improved operator awareness of key performance indicators such as boiler efficiency, specific consumption (heat rate), and emissions. The software will also be used to support trend analysis, identify capacity limitations and identify opportunities for improving plant profitability through controllable losses.

The system shall be designed with emphasis on ease of use by the plant operating staff, performance engineers, managers, and other designated staff. The program shall be capable of sharing results remotely via LAN/WAN/modem interconnection as well as hardcopy reports, spreadsheets, etc. The software shall be designed to operate in a power plant environment with a high degree of reliability.

Any required instrument upgrades or additions identified during the bidding process will be furnished and installed under separate specifications.

A.1 INSTRUCTIONS TO BIDDERS. The Contractor shall provide a complete proposal detailing but not necessarily limited to a description of the services, exceptions and/or clarifications to the proposal, fees, rate structures, and terms and conditions which will govern the project. The Contractor will provide a description of the work package. THE PROPOSAL SHALL INCLUDE THE ESTIMATED MAN-HOURS AND ASSOCIATED COSTS FOR THE PROJECT; THE COSTS SHALL BE CONSIDERED AS FIRM PRICE, WITH NO INCREASES BEING ALLOWED EXCEPT FOR AUTHORIZED CHANGED IN THE SCOPE OF WORK.

A.2 RIGHT TO REJECT. The right is reserved by ELCEN to reject any or all proposals. In addition, ELCEN may elect to cancel the project if it is determined necessary by ELCEN or if funding is not available.

A.3 VALIDITY. Bidder's proposal shall remain valid for a period of _____ days commencing on the proposal date.

A.4 PROJECT PROCEDURES. The following items and services shall be furnished as optional work under this specification:

A.4.1 Correspondence. All correspondence and documents from the Contractor to ELCEN during the proposal process shall be addressed to:

Type name and address of ELCEN's contacts here.

After award, a formal distribution list for letters, transmittals, etc. will be created.

A.4.2 Project Team. The Contractor shall have a dedicated Project Manager responsible for the coordination of all project related activities. The Project Manager identified for this project by the Contractor shall remain in that position throughout the project. Any changes in this key position shall be with the approval of ELCEN.

The Contractor shall include resumes of personnel who would be assigned to the project, project team organization, job descriptions, project experience, and other information that is considered pertinent.

ELCEN reserves the right to request personnel changes if performance/experience becomes an issue.

A.4.3 Scope Change Document . For any modified scope changes or additions to the Contractor work, the Contractor will provide written notification per the contract procedure. ELCEN reserves the right to have any extra work performed on a firm price, not-to-exceed or cost-plus basis. The Contractor will submit with his proposal a complete rate structure applicable to any work to be performed under this agreement.

The Scope Change Document shall describe the reason for change, the person who requested the change, the original scope and man-hour cost, and the new scope and man-hour cost.

Each Scope Change Document shall be consecutively numbered. Any effects on the engineering schedule and overall project schedule shall be described. **WRITTEN APPROVAL FROM ELCEN IS REQUIRED BEFORE PROCEEDING WITH THE SCOPE CHANGE**.

A.4.4 Invoicing. The Contractor's proposal is to include a description of their invoicing procedures. ELCEN will issue a purchase order to the selected Contractor. Invoices not complete in reference or lacking in backup information will be rejected.

Progress and/or milestone based payments will be made in an amount equal to _____(___) percent of Work completed with the balance being retainage.

Final payment will be made upon completion and acceptance of the work. Retainage will be paid after all submittals have been received and accepted following final payment.

A.4.5 Warranty. The Contractor shall provide a warranty on all the hardware, software and services rendered to ensure that the Performance Monitoring System meets the following requirements:

Be free from defects in design, material, workmanship and title;

Be of the kind, quality and capability designated or described in the Contract;

Perform in the manner set forth in or required by the Contract; and

Have been produced processed, delivered and sold or licensed in conformity with all applicable federal, state and local laws, administrative regulations and orders. The

Contractor shall execute, certify and deliver to ELCEN any documents as may be required to effect or evidence compliance with such federal, state and local laws.

Except for consumable items, the warranty period shall be _____.

During the warranty period, the Contractor shall provide free of charge telephone support for ELCEN users and remote support for Software imperfections.

A.4.6 Performance Guarantee. The performance guarantee shall be in the form of a bank letter of credit for 10% of the contract value, valid until receipt and approval of the Acceptance Documentation; or by retention of 10% of the amount of each invoice, retention to be paid upon receipt and approval of the Acceptance Documentation. If in the form of a bank letter of credit, the performance guarantee should be issued by a bank in Romania, or by a bank abroad with a correspondent in Romania.

A.4.7 Acceptance Documentation. The Contractors shall provide to the Purchaser the Acceptance Documentation (at the end of executions works, at the end of commissioning, at the end of the guarantee period) in accordance with the Romanian legislation in force.

A.4.8 Insurance. The Contractor shall provide full insurance of all software, hardware, etc, against losses or damages during execution, transportation, storage, testing, and commissioning.

B - BID DATA

B.1 GENERAL. Each Bidder shall submit complete and definitive information on his proposal offering in sufficient detail to permit a complete technical analysis of the Proposal.

The requirements for information contained in this Section are basic. Additional information shall be provided as requested by the Purchaser.

The scope of supplementary information and equipment data requested herein shall be included in the Proposal to the fullest extent possible at the time of bid submittal. As a minimum, sufficient proposal data shall be submitted to demonstrate compliance with this specification, and to allow a comprehensive evaluation of the bid. Proposals lacking sufficient data to satisfy these requirements will be considered non-responsive. The successful Bidder shall complete all data submittal requests and Proposal data entries for inclusion in the Purchase Order documents prior to the Award of Contract.

B.2 PERFORMANCE MONITORING SYSTEM DATA. Submit Data required on the following pages. Where options are indicated in the PROPOSAL FORM or BID DATA, provide complete information for each option.

Entries on the BID DATA forms shall be entered electronically in the MS Word file contained on the CD-ROM or diskette included with this specification. A hardcopy of the BID DATA will be included with each proposal. Electronic copies of the BID DATA file will be provided to UTILITY NAME and Black & Veatch along with the required numbers of proposals.

Electronic copies of the files may be submitted by CD-ROMs or 3.5 inch diskette. Electronic copies submitted with the proposal will be virus checked and will be certified to be virus free.

REQUIREMENT DESCRIPTION	CONTRACTOR RESPONSE
GENERAL	
Describe the typical system implementation strategy including system acceptance testing and training.	
Describe in detail the assistance you will need from the Purchaser's staff in the installation and implementation of the software package. What are the tasks the plant staff must perform in the data gathering, parametric testing, system development and initial installation of the system? Include an estimate of hours per week involvement by plant staff.	
Detail the terms under which source code will be made available for exclusive purpose of self-maintaining the optimization system software.	
How much on-site support time will you provide during system installation and tuning in preparation for on-line operation? Describe and identify the make-up of the optimal project team including individual skill sets.	
Describe your on-going support (e.g., Help Desk, hot line, newsletters, user groups, internet, e-mail, etc.). Describe your procedure for problem resolution. What are the lead time requirements and criteria for on-site technical support?	
Would you use third party contractors or subcontractor for any of the services required under the specification? If so, for what parts of the project?	
Purchaser's staff should be allowed to modify the graphical user interface (GUI) screens, underlying calculations, add/delete input/output variables Explain how this requirement is supported.	
What is the nature of outside help needed by plant staff to create new models?	
Can plant staff update or recalibrate the unit-specific or equipment performance calculations or will they be required to use your services? Explain.	
What is the nature of outside help needed by plant staff to maintain the existing software?	
What is the nature of outside help needed by plant staff to update the existing software? (i.e., new version release)	
Is there a User's Group. If yes, please indicate the number of members.	
Number of current software users.	

REQUIREMENT DESCRIPTION	CONTRACTOR RESPONSE
Describe the overall system architecture including system size, redundancies, I/O quantity (if applicable), interfaces with other systems, UPS requirements / type (if applicable), backup requirements, list of equipment, etc.	
SOFTWARE DESCRIPTION	
Describe the type of software application (i.e. standalone program, network installation, client/server application, application service provider (ASP), etc.).	
Windows is the preferred operating system. What operating systems are supported (i.e. Windows NT, Windows XP, etc.) by the software?	
List the minimum and recommended hardware requirements for server and client PCs. • Processor • RAM • Hard Drive Size • Monitor Size • Network (Ethernet LAN, TCP/IP protocol) • Printer Requirements • Modem Requirements	
How many users (seats) are supported with a single software license? Can additional seats be purchased?	
How many concurrent users are allowed by the system?	
What is the current version number and release date? How often are updates issued?	
What types of unit configuration are supported by the software (i.e. Fossil fired steam, combustion turbine, combined cycle, etc.)?	
The software should support SI units of measure. Explain how the proposed software meets this requirement.	
What languages are currently supported by the software?	
If not currently available, can a Romanian language version be developed?	

REQUIREMENT DESCRIPTION	CONTRACTOR RESPONSE
Describe the documentation that will be provided with the software.	
Does the software evaluate performance of the following equipment items? If yes, describe the system capabilities and functions. • Fossil fuel fired steam generators • Combustion turbines • Heat recovery steam generators • Turbine generators • Condensers • Cooling towers • Feedwater heaters • Condensate pumps • Feedwater pumps • Condensate pumps • Fans (forced draft, induced draft, primary air, flue gas recirculation, etc.) • Pulverizers • Air heaters • Electrostatic Precipitators • Fabric Filters • Selective Catalytic Reduction • Selective Non-Catalytic Reduction • Flue Gas Desulfurization • Overall plant (specific fuel consumption, heat rate, emissions, etc.)	
Do the software calculations include a detailed boiler heat transfer model capable of support boiler cleanliness and other predictive type calculations? Describe.	
Does the software provide indication of user controllable losses? If yeas, describe.	
Does the software support trend analysis of user selected variables? If yes, describe.	
Can data be averaged over specified time periods? If yes, explain.	
Does the software include Save and Rerun features for selected trends or time periods using the standard User Interface Screens? If yes, explain.	
Can data from separate units be combined to estimate overall plant-level performance and costs?	

REQUIREMENT DESCRIPTION	CONTRACTOR RESPONSE
How often is data retrieved from the Data Acquisition System/historian? Is this period adjustable?	
How often are performance calculations performed and screen displays updated? Is this period adjustable?	
INPUT REQUIREMENTS	
How is input data retrieved/entered and stored?	
How often are inputs variables and performance calculations updated?	
What fuel quality parameters are required and supported by the software? Provide a detailed list.	
What unit / equipment configuration data is required for system implementation? Provide a detailed list.	
What type of economic data is required and supported by the software? Provide a detailed list.	
What types of input data not typically retrieved from a data acquisition system or historian can be updated on-line (i.e. fuel quality, economic data, etc.)?	
Does the software have the ability to default missing information? If yes, how are these defaults established.	
Based on review of the enclosed instrument TAG list, what additional instrumentation is required or recommended for each specific performance module / calculation?	
Can data from new instrumentation be incorporated into the performance calculations? If yes, describe how.	
Can data from an existing instrument be removed from performance calculations? If yes, explain how.	
OUTPUT DATA	
How often are performance results generated? Is this period adjustable.	
How are results stored?	
How much storage space is typically required for one hours worth of data for a complete Performance Monitoring system?	

REQUIREMENT DESCRIPTION	CONTRACTOR RESPONSE
How are results displayed. Describe in detail the typical number of screens, content, etc.	
Where are performance results typically displayed (i.e. operator consol in control room, plant workstations, etc.)?	
How do users navigate between screens to locate and review desired information?	
How many screens and reports are provided for each equipment item?	
How are program errors identified and reported to the user?	
How are instrument errors and out of range data reported to the user?	
Model results should be able to be shared outside of the software (reports, spreadsheets, etc.) Explain how the software supports this requirement.	
What other software tools are recommended or required for use with the proposed Performance Monitoring System?	
Can the output be customized by the user?	
OPTIONAL SERVICES	
Please describe any optional services which are recommended or can be provided on an as-needed basis including the following: • Advanced heat rate awareness training. • Remote performance monitoring • On-site support services • Program customization (input screens, output, documentation, etc.)	

Section 1A - SCOPE OF WORK

1A.1 GENERAL. This section covers the general description, scope of work, and supplementary requirements for the work included under this specification.

It is ELCEN's intention to install a comprehensive Performance Monitoring System for evaluating real time performance of key equipment and overall unit performance. The primary purpose of this software will be to reduce generation costs through improved operator awareness of key performance indicators such as boiler efficiency, specific consumption (heat rate), and emissions. The software will also be used to support trend analysis, identify capacity limitations and identify opportunities for improving plant profitability through controllable losses.

The system shall be designed with emphasis on ease of use by the plant operating staff, performance engineers, managers, and other designated staff. The program shall be capable of sharing results remotely via LAN/WAN/modem interconnection as well as hardcopy reports, spreadsheets, etc. The software shall be designed to operate in a power plant environment with a high degree of reliability.

The work included under this specification shall be supplied FOB PLANT NAME, PLANT LOCATION.

1A.2 WORK INCLUDED UNDER THIS SPECIFICATION. The work performed by the Contractor shall be to furnish software for evaluating real-time and historical operating performance of the overall plant and major equipment items including the steam generator, turbine generator, feedwater heaters, condenser, large fans, large pumps, and the cooling tower. Items or services to be quoted as options to the base bid are listed under WORK INCLUDED AS OPTIONS UNDER THIS SPECIFICATION.

All computer software and documentation shall be furnished by the Contractor as specified by the Purchaser in this specification.

The Contractor shall provide on-site operator and system administrator training.

1A.2.1 Miscellaneous Materials and Services. Miscellaneous materials and services not otherwise specifically called for shall be furnished by the Contractor in accordance with the following:

> All supporting third-party software with the exception of the Windows operating system software required to install and operate of the Performance Monitoring System on the designated Owner's workstation(s).

1A.3 WORK NOT INCLUDED UNDER THIS SPECIFICATION. The following items of work will be furnished by the Purchaser (unless furnished as part of optional work under WORK INCLUDED AS OPTIONS UNDER THIS SPECIFICATION):

Construction and miscellaneous services and materials specified as furnished by the Purchaser.

Supply and installation of new instrumentation required or recommended as part of the bid process. Instrumentation will be purchased and installed under separate specifications.

Supply and installation of electrical power and control wiring, conduit, junction boxes, network hubs, and other electrical enclosures not integral to equipment supplied by the Contractor.

Personnel to conduct parametric testing of software based on Contractor's test plan.

1A.4 WORK INCLUDED AS OPTIONS UNDER THIS SPECIFICATION. The following items and services shall be furnished as optional work under this specification:

Remote monitoring and reporting of performance following system acceptance.

Customized output reporting based on ELCEN specific requirements identified following user training and familiarization.

Overall plant level monitoring (based on roll-up of unit-level performance data.)

1A.5 CONTRACTOR'S SERVICES. The services called for in WORK INCLUDED UNDER THIS SPECIFICATION and the services inherent to any options purchased by the Purchaser as called for in WORK INCLUDED AS OPTIONS UNDER THIS SPECIFICATION shall be in accordance with the following.

1A.5.1 Submittal of Engineering Data. Drawings and other engineering data for the specified equipment and materials are essential to the design and implementation of the entire project. The Contractor shall submit drawings and engineering data in accordance with the schedule and requirements specified herein to assure compliance with the overall installation and operating schedule.

Two weeks after receipt by Purchaser for review of drawings and engineering data shall be included in the Contractor's design, procurement, and delivery schedule.

1A.5.2 Contractor's Field Technical Services. The Contractor shall furnish the services of one or more technical service representatives when requested by the Purchaser. The service representatives shall be technically competent and experienced in the installation and operation of the system, and authorized by the Contractor to perform the work stipulated. The Contractor's technical representative shall be responsible for all on-site work.

As part of the base scope of the work, the Contractor's technical service representatives shall provide periodic assistance and direction to the Purchaser and shall inspect the computer hardware and software after installation and make any needed changes or adjustments to assure proper operation. They shall furnish written certification to the Purchaser that the

system has been inspected and adjusted by them or under their direction and that it is ready for service, all of which shall be done before initial operation of the system.

The service representatives shall also be present during data collection, parametric testing, installation of hardware and software, testing of system communication with the DCS or historian, operator graphics display screen modifications, initial operation of the system in open- and closed-loop, system validation, and acceptance testing. The technical service representative shall instruct the plant personnel in the proper operation of the system.

1A.5.3 Implementation Conference. The Contractor's technical service representative shall attend an implementation conference at a time and place selected by the Purchaser to discuss matters relative to the execution of this Contract. The Contractor's technical service representative shall attend additional conferences as required by the Purchaser thereafter to expedite the work.

1A.6 LANGUAGE, NUMBERS, AND SYMBOLS.

All the documents of the offer and before signing the contract shall be in English. After signing the contract, all drawings, designs, specifications, manuals, operating instructions, statements, schedules, notices, documents, nameplates, and markings shall be in both the English and Romanian languages. All graphics developed by the Contractor shall be in the Romanian language. Windows operating system graphics may be supplied in English if a Romanian version is not available.

All units of measurement shall be stated in the SI - system. The Contractor shall further be required to employ in all drawings and submittals the same symbols and designations as are used by the Purchaser.

Section 1B – DESIGN DATA AND DRAWINGS

1B.1 GENERAL. This section stipulates the requirements for engineering data, software documentation, or other materials which the Contractor may submit for review.

1B.2 CORRESPONDENCE. Correspondence on all technical matters shall be addressed to the Purchaser as follows:

ELCEN
UTILITY ADDRESS

Attention: CONTACT NAME

Correspondence on all procedural and commercial matters shall be addressed to the Owner's Representative as follows:

ELCEN
UTILITY ADDRESS

Attention: ELCEN CONTACT NAME

Letters of transmittal shall accompany submittals of engineering data, software documentation or other materials and shall include a list of the items included in the transmittal. Correspondence shall be identified with the project name and plant name. Transmittal of drawings and data shall be as specified in the article entitled DRAWINGS & OTHER CONTRACTOR PREPARED MATERIALS.

1B.3 REVIEW OF ENGINEERING DATA. The Purchaser's review of engineering data will cover only general conformity of the data to the specifications and documents, external connections and interfaces with existing equipment. This review does not indicate a thorough review of all dimensions, quantities, and details of the equipment, material, device, or item indicated or the accuracy of the information submitted. This review shall not be construed as relieving the Contractor from any responsibility for errors or deviations from the requirements of the contract documents.

1B.4 DESIGN DATA. The following design data shall be submitted as scheduled in Section 1C, unless otherwise specified:

List of minimum and recommended hardware requirements. ***(if being purchased by ELCEN.)***

List of minimum and recommended hardware requirements. *(If being purchased by ELCEN. This will include things like the Windows operation system, MS Office, etc. if the hardware is being purchased by ELCEN)*

Itemized list of software input requirements including fuel quality, equipment configuration, equipment performance, and economic variables.

1B.5 DRAWINGS & OTHER CONTRACTOR PREPARED MATERIALS. It is not anticipated that any Contractor-prepared drawings will be required for this project. However, any Contractor-prepared drawings or other Contractor prepared materials shall be sufficient detail to indicate the arrangement, description, operation or use of the materials for the information specifically requested in the submittal schedule specified in Section 1C.

1B.5.1 Drawing & Material Submittal. ____ (__) copies of the drawings and /or other contractor prepared materials shall be submitted to the Purchaser as follows:

_____copies to:
ELCEN
Address:

Attention: Contact

Markups reviewed by the Purchaser will be returned to the Contractor with corrections or exceptions clearly marked. The Contractor shall make the changes noted thereon and copies of the corrected drawings or data shall be submitted for review in the same manner as the original submittal.

When the drawings or other Contractor prepared materials are returned to Contractor with no corrections or exceptions noted the Contractor shall submit versions for final distribution as specified hereinafter under Final Markup Drawings and Contractor Prepared Materials..

No work shall be performed in connection with the installation of equipment, materials, computer hardware and software until the drawings and data have been reviewed by the Purchaser except at the Contractor's own risk and responsibility. Work may proceed on equipment, materials, computer hardware and software when the drawings and data therefore have been returned with no corrections or exceptions noted; or when drawings have been returned with corrections or exceptions noted, provided the work is performed in accordance with the Purchaser's notations.

If changes are made at the project site to the equipment to correct installation errors, due to design changes or wiring revisions, revised drawings indicating the changes made shall be prepared and submitted to the Purchaser..

1B.5.2 Final Markup Drawings & Materials. After receipt from the Purchaser of drawings or other Contractor prepared materials with no corrections or exceptions

noted, the Contractor shall transmit ( ) copies to the Purchaser for final distribution.

1B.6 INSTRUCTION MANUALS/DOCUMENTATION. The Contractor shall furnish instruction manual and documentation bound in a binder suitable for long term rough usage. Front covers of the manuals shall be permanently marked with lettering indicating Owner's name, plant name, name of software and name of manufacturer.

The manuals shall include the following information specific to each version of the software supplied by the Contractor:

- Table of Contents and index tabs.
- Name, address, telephone number, and fax number of the local and national service representative and supplier and 24 hour emergency service contact.
- Specifications including minimum and recommended hardware requirements.
- Description of the software.
- Installation instructions.
- Operating instructions.
- Software troubleshooting guidelines.
- Data backup and recovery guidelines.

The above listed requirements are the minimum. Additional information that is necessary for proper installation, operation and utilization of the software shall also be included.

One copy of the instruction manual shall be submitted to the Purchaser for review. After the manual has been approved, the final ( ) copies should be sent to the Owner.

Section 1C - SCHEDULE

1C.1 GENERAL. This section covers the schedule and scheduling requirements for performance and completion of the work included under this Contract.

1C.2 SCHEDULE. Milestone, payment and delivery schedules are defined below. The completion dates indicated are essential to the work under this Contract and to the coordination and continuity of other Purchaser work activities..

The listing of activities and dates is not intended to be a complete or detailed listing of all work under this Contract or of all interfaces with the work of other contractors.

It is understood and agreed that the dates shown within the Milestone and the Payment and Delivery Schedules are the latest feasible completion dates and that earlier dates may be attained as agreed to by the Purchaser and the Contractor.

Milestone	Date
Issue Request For Proposal	
Receive Bidder Responses to RFP Including Detailed Data Input Requirements	
Contract Award	
Data Collection and Instrument Assessment	
Hardware Delivery (if applicable)	
Establish Data Communications with DCS, DAS or historian	
Mid-Project Review Including Graphical User Interface Screen Review	
Software Installation and Checkout	
On-site Training	
System Acceptance Testing	
Punch List Resolution	
System Acceptance / Commence Warranty Period	

1C.3 PRELIMINARY SCHEDULE. The Contractor shall submit, as part of his proposal, a preliminary schedule of the work. This preliminary schedule shall include a bar chart showing all major activities. The Contractor shall also submit with his proposal a work plan, which describes the activities in sufficient detail to clearly show his understanding of the concentrated effort and coordination required to complete the work by the scheduled contract completion date.

1C.4 CONTRACTOR'S DETAILED SCHEDULE. Within 5 days after the date of contract award, the Contractor shall submit a detailed schedule. The detailed schedule shall be based upon the dates specified in the schedule included herein.

The detailed schedule shall be in bar graph form acceptable to the Purchaser.

The detailed schedule shall contain all activities of the plan, including acquisition of special equipment, materials, computer hardware, and computer software. For all equipment and materials supplied by the Contractor especially for this project, the schedule shall include the sequence of activities including issuance of purchase orders, preparation of drawing markups and delivery. Each activity shall be identified on the schedule by a descriptive title and shall be assigned an estimated number of working days required and an expected completion date.

Schedules returned to the Contractor for revision or correction shall be resubmitted for review within ___ calendar days. Upon acceptance by the Purchaser of the detailed schedule of activities, the Contractor will be responsible for maintaining such schedule.

Section 1D - OTHER REQUIREMENTS

1D.1 GENERAL. These requirements apply in general to all equipment, computer hardware, and software and are supplementary to the technical requirements. If requirements specified herein are in conflict with the requirements specified in the technical requirements, the technical requirements shall govern to the extent of such conflict.

The Contractor's proposal shall be based upon the use of equipment and materials complying fully with the requirements specified in this Section. It is recognized that the Contractor may have standardized on the use of certain components, materials, processes, or procedures different than those specified herein. Alternates in addition to the base proposal on the basis of supplying the Contractor's standard components, materials, processes, or procedures will be considered. The alternate proposal shall clearly stipulate the alternate proposed, the specific exceptions to the specification, and the price change applicable for supplying such alternate.

1D.2 REFERENCED STANDARDS. Reference to the standards of any technical society, organization, or association, or to the laws, ordinances, or codes of governmental authorities shall mean the latest standard, code, or specification adopted, published, and effective at the date of taking bids unless specifically stated otherwise in this specification.

The specifications, codes, and standards referenced in this specification (including addenda, amendments, and errata) shall govern in all cases where references thereto are made except where they conflict with this specification. In case of conflict between the referenced specifications, codes, or standards and this specification, the latter shall govern to the extent of such difference.

All engineered equipment manufactured under this specification and the associated engineering for the manufacture shall be in accordance with the codes and standards detailed in the specification sections and the following codes and standards.

For engineered equipment manufactured under this specification and the associated engineering for that engineered equipment, reference in these specifications is made to only USA standards, codes, and specifications, and the equipment, materials, and workmanship furnished under these specifications shall be in accordance with the standards, code, or specification designated. Equivalent standards, codes and specifications of other authorities will be considered when submitted to the Purchaser or Owner's Representative in the English language. If the proposed substitute standards, codes, or specifications are acceptable to the Purchaser and the Owner's Representative, their use will be authorized in writing. In the event the substitute standards, codes, or specifications are not acceptable, the work shall proceed in accordance with USA standards, codes, and specifications designated in the specifications.

All materials furnished and installation procedures used under this specification shall conform with accepted good engineering practice, the codes and standards detailed in the specification sections, and the requirements of the applicable Romanian standards.

1D.2.1 List of References. All engineered equipment, engineering, materials, and installation provided under this specification shall be in accordance with the following codes and standards.

Works	**In Accordance With**
Software Development & Testing	ISO 9001 Guidelines
Performance Calculations (except cooling towers)	ASME (American Society of Mechanical Engineers) Performance Test Codes
Cooling Tower Performance Calculations	Cooling Tower Institute (CTI) paper AT-105, Performance Curve Method.
Steam and Gas Tables.	ASME 1967 Formulations

1D.3 MATERIALS. Unless specifically provided otherwise in each case, all materials, equipment, computer hardware, and computer software furnished for permanent installation shall conform to applicable standard specifications and shall be new, unused, and undamaged.

1D.4 IDENTIFICATION. All shipping notices, computer hardware and software, and other documents pertaining to the equipment and materials furnished under this specification shall be identified as follows:

ELCEN
ADDRESS

Attention: CONTACT NAME

1D.5 SHIPMENTS. All shipments shall be F.O.B. destination, freight allowed.

The Contractor shall discuss with the Purchaser the routing of shipments and shall route the same as indicated by the Purchaser provided freight rates are no greater than by other routes. Shipments are accepted Monday through Friday from _____ a.m. to _____ p.m.

All shipments shall be delivered to:

ELCEN
PLANT ADDRESS

Attention: CONTACT NAME

The equipment shall be shipped boxed, crated, or otherwise protected against damage during shipment, handling, and storage at the Project Site. Openings shall be closed with caps, plugs, or other suitable closure devices suitable for rough usage. Packaging shall be suitable to prevent moisture or water damage during shipment and outdoor storage at the Project Site.

The shipping forms must include the following content:

- Fiscal bill (invoice);
- Shipping notice;
- Certificate of origin;
- Factory testing certificate;
- Quality and conformity certificate;
- Guarantee certificate;
- EUR certificate;
- Transport certificate;
- Import statement value;
- Insurance policy-"for all risks"

1D.6 SHIPPING NOTICE. The Contractor shall submit to the Purchaser duplicate copies of shipping notices describing each shipment of material, equipment, computer hardware, or software. Climate control requirements shall be included. The shipping notices shall be mailed to arrive approximately ___ days ahead of the estimated shipment arrival. The addressee for each shipping notice will be CONTACT NAME.

1D.7 MATERIALS LIST. The Contractor shall prepare and submit with the first shipping notice duplicate copies of an itemized materials list covering all material, equipment, computer hardware and software furnished under this specification. The materials list shall be in sufficient detail to permit an accurate determination of the completion of shipment.

1D.8 CORRECTION OF ERRORS. Equipment and materials shall be complete in all respects within the limits herein outlined. All errors or omissions required to be corrected in the field shall be done by the Contractor or his duly authorized representative at the Contractor's expense.

1D.9 QUALITY ASSURANCE. The Contractor shall maintain a quality assurance program that provides that equipment, materials, and services under this specification whether manufactured or performed within the Contractor's plant or at any other source shall be controlled at all points necessary to assure conformance to contractual requirements. The program shall provide for the prevention and ready detection of discrepancies and for timely and positive corrective action. The Contractor shall make objective evidence of quality conformance readily available to the Purchaser. Instructions and records for quality assurance shall be controlled.

Section 2A – TECHNICAL REQUIREMENTS

2A.1 GENERAL INTENTION. It is the intention of the Purchaser to install a comprehensive Performance Monitoring System for evaluating real time performance of key equipment and overall unit performance. The primary purpose of this software will be to reduce generation costs through improved operator awareness of key performance indicators such as boiler efficiency, specific consumption (heat rate), and emissions. The software will also be used to support trend analysis, identify capacity limitations and identify opportunities for improving plant profitability through controllable losses.

The system shall be designed with emphasis on ease of use by the plant operating staff, performance engineers, managers, and other designated staff. The program shall be capable of sharing results remotely via LAN/WAN/modem interconnection as well as hardcopy reports, spreadsheets, etc. The software shall be designed to operate in a power plant environment with a high degree of reliability.

2A.2 UNIT DESCRIPTION(S). The Owner intends to install the Performance Monitoring System to provide real-time indication of unit and/or plant level performance at Unit(s) _____ of the _____ Generating Station. The _____ Generating Station is located _____ and consists of _____ units totaling _____ MW. A summary of key unit variables for each applicable unit is included below. (Complete the table for applicable units.)

Plant / Unit No.	Unit ___	Unit ___	Unit ___
Unit Type (Pulverized coal, Oil Fired, CTCC, etc.)			
Boiler Type (if applicable) Manufacturer Method of Reheat Control Drum or Once Through Draft (Balance, Pressurized, etc.)			
Fuel Type (Coal, oil, gas, etc.)			
Gross Rating, MW			
Net Rating, MW			
Capacity Factor, %			
Specific Fuel Consumption g/kWh or Heat Rate kCal/kWh			
Boiler Efficiency, %			
Cooling Source (Once through or Cooling Tower)			
Emission Control Equipment Particulate SO2 NOx			
Fuel Quality Gross Calorific Value, kJ/kg Net Calorific Value, kJ/kg			

Sulfur Content, %			

The following table provides a list of existing instrumentation capable of providing input into the performance monitoring system. (COMPLETE TABLE FOR EACH APPLICABLE UNIT AND EQUIPMENT TO BE MONITORED SUCH AS THE STEAM GENERATOR, TURBINE GENERATOR, CONDENSER, COOLING TOWERS, FEEDWATER HEATERS, AIR HEATER, LARGE FANS (FD, ID, PA) AND LARGE PUMPS (FEED & CONDENSATE))

Point Number	Function	Range	Engineering Units	Remarks

2A.3 GENERAL SOFTWARE REQUIREMENTS. The Performance Monitoring System unit shall be designed to operate using the Windows __ or ___ operating system. For ease of use, the Performance Monitoring System shall also be designed to have the appearance of standard Windows applications. The graphical user interface (GUI) shall allow quick and easy navigation through the system. The GUI shall be consistent among all screen displays and tools to the maximum extent possible. Normal user interaction with the system shall be through the use of a mouse or keyboard.

Any required site license fees for the Performance Monitoring System shall be included as part of the services to be provided by the Contractor under this Contract. All software updates issued by the Contractor within the first year after will be included in the initial purchase price and will be installed by the Purchaser, as soon as the updated software has been extensively beta tested and is available for distribution and use. Any third party software required by the Performance Monitoring System (with the exception of the Windows based operating system) shall be included in the initial purchase price of the system and shall be covered by the warranty.

2A.4 GENERAL HARDWARE REQUIREMENTS. The system for each unit shall be installed on a separate _____ based server computer provided by the _____. (INDICATE IF TO BE PROVIDED BY OWNER OR SUPPLIER.) Minimum and recommended hardware requirements will be provided by the Supplier as specified in Section BD-2 of this specification.

REVIEW THESE REMAINING STATEMENTS AND MODIFIY OR DELETE AS APPLICABLE.

One operator workstation HMI PCs will be provided by the _____ (OWNER OR SUPPLIER). All remote workstations capable of viewing system results will be provided by the Owner.

The Performance Monitoring System will retrieve data from a _____ (ENTER MANUFACTURER AND MODEL NUMBER) historian provided by the Owner.
Or
The Performance Monitoring System will retrieve data from a separate historian provided by the _____ (OWNER OR SUPPLIER). The historian will interface with the existing _____ plant computer via _____ local area network.

2A.5 INSTRUMENTATION. Unless specified otherwise in other sections, all instrumentation components furnished with the equipment shall be constructed to withstand the temperatures, pressures, and corrosive conditions encountered in the actual service. Instruments rated for hazardous area classifications shall be furnished where required by applicable code or the detailed specifications.

2A-6 CONTROL POWER. Electrical power for control and instrumentation will be a nominal 240 volt, single-phase, 50 hertz, alternating current. The Contractor shall provide any devices required for proper operation and protection of the equipment during electrical power supply and ambient temperature fluctuations described in the following paragraphs.

2A.7 TRAINING. On-site training shall be provided to personnel who will be responsible for installing, operating and maintaining the Performance Monitoring System. Training sessions shall be customized to fit the needs of each user, including operators, engineers, supervisors, and plant managers. Each class participant shall be provided with training materials intended for reference and instructional purposes. A description of the training program, schedule and duration of training sessions shall also be provided in the Contractor's proposal. All training material shall be reviewed and approved by the Purchaser.

The Contractor shall also include a CD-ROM disk containing all training documents.

2A.8 TECHNICAL SUPPORT. The Contractor shall have technical support available in accordance with the following subsections.

2A.8.1 Telephone Support. The Contractor shall have technical support available during normal business hours. The Contractor shall have the ability when necessary to support the system via modem or network dial up during business hours.

2A.8.2 On-Site Support. The Contractor shall provide on-site support in accordance with the term of Section 1A.5.2 Contractor's Field Technical Services. Labor and expenses for other Owner requested on-site support will be provided in accordance with the rates specified in the Financial Proposal.

FINANACIAL PROPOSAL

ELCEN

GENERATING PLANT NAME

PERFORMANCE MONITORING SYSTEM

RFP NO.
PROJECT

BID ISSUE
(REV 0)

building a world of difference™ | BLACK & VEATCH

FP – FINANCIAL PROPOSAL

FP.1 TOTAL FIRM PRICE. Contractor shall provide a total firm price for all materials, labor and services covered by under the base proposal. All prices shall be specified in Euro.

TOTAL FIRM PRICE _____

FP.2 PRICE BREAKDOWN. Contractor shall provide a price breakdown as follows for all items included in the base and optional scope of service. All prices shall be specified in Euro.

Item	Price
Hardware (if supplied by bidder) a) Server b) Client PCs c) Historian	
Software License Fee	
Annual Maintenance Fee	
Users Group Membership Fee	
On-site Training	
On-site Engineering/Startup Services	
Total Man-Days in On-Site Engineering/Startup Services	Man-days
Total Man-Days in On-Site Training	Man-days
Other Optional Services (describe) a) Remote monitoring and reporting service b) c) d)	

FP.3 LABOR RATES. Contractor shall provide a labor rates by position applicable to the project. All rates shall be specified in Euro per man-hour. All expenses shall be at actual cost.

Position	Straight Time	Overtime	Sundays & Holidays
Project Manager			
Project Engineer			
Senior Engineer			
Staff Engineer			
IT Specialist			
Administrative Support			
Contractors Field Technical Services Personnel			
Other (As defined by Contractor)			

FP.4 EXCEPTIONS TO THE SPECIFICATION. The Contractor shall certify that he agrees to all provisions of the Specification and Bid Documents and clearly list any exceptions under the title of EXECPTIONS in the Proposal. Bidder's terms and conditions are not considered specific exceptions. If exceptions are taken, identify the page(s) of the proposal that apply.

FP.5 SUBCONTRACTORS. This bid is based upon the use of the following subcontractors:

Trade	Subcontractor

All technical requirements and all commercial terms and requirements must be followed by all subcontractors as well as by the Contractor.

SIGNATURE OF BIDDER

Corporation Name: _____

By Authorized Person: _____

Title: _____

Business Address: _____

SECTION III
TECHNICAL REQUIREMENTS BOOK

ELCEN

GENERATING PLANT NAME

TRANSMITTERS
For PRESSURE, FLOW, LEVEL and TEMPERATURE

RFP NO. _____
PROJECT _____

BID ISSUE
(REV 0)

building a world of difference | BLACK & VEATCH

TABLE OF CONTENTS

	Page
Section A - GENERAL INFORMATION	
A.I INSTRUCTIONS TO BIDDERS	A-1
A.2 RIGHT TO REJECT	A-1
A.3 VALIDITY	A-1
A.4 PROJECT PROCEDURES	A-1
A.4.1 Project Team	A-1
A.4.2 Scope Change Document	A-2
A.4.3 Invoicing	A-2
A.4.4 Warranty	A-2
A.4.5 Performance Guarantee	A-3
A.4.6 Acceptance Documentation	A-3
A.4.7 Insurance	A-3
Section B – BID DATA	
B.1 GENERAL	B-1
B.2 INFORMATION TO BE SUPPLIED WITH BID	B-I
Section 1A – SCOPE OF WORK	
1A.1 GENERAL	1A-1
1A.2 WORK INCLUDED UNDER THIS SPECIFICATION	1A-1
1A.3 WORK NOT INCLUDED UNDER THIS SPECIFICATION	1A-1
1A.4 WORK INCLUDED AS OPTIONS UNDER THIS SPECIFICATION	1A-1
1A.5 CONTRACTOR'S SERVICES	1A-1
1A.5.1 Submittal of Engineering Data	1A-1
1A.5.2 Contractor's Field Technical Services	1A-2
1A.5.3 Design Conference	1A-2
1A.6 LANGUAGE, NUMBERS, AND SYMBOLS	1A-2
Section 1B – DESIGN DATA AND DRAWINGS	
1B.I GENERAL	1B-1
1B.2 CORRESPONDENCE	1B-1
1B.3 REVIEW OF ENGINEERING DATA	1B-1
1B.4 DESIGN DATA	1B-1
1B.5 DRAWINGS	1B-1

1B.5.1 Drawing Submittal 1B-2
1B.5.2 Final Markup (As-Built) Drawings/Software 1B-2
1B.6 INSTRUCTIONS MANUALS/DOCUMENTATION 1B-2

TABLE OF CONTENTS
(continued)

	Page
Section 1C– SCHEDULE	
1C.1 GENERAL	1C-1
1C.2 SCHEDULE	1C-1
1C.3 PRELIMINARY SCHEDULE	1C-1
1C.4 CONTRACTOR'S DETAILED SCHEDULE	1C-1
Section 1D – OTHER REQUIREMENTS	
1D.1 GENERAL	1D-1
1D.2 REFERENCED STANDARDS	1D-1
1D.3 MATERIALS	1D-2
1D.4 IDENTIFICATION	1D-2
1D.5 SHIPMENTS	1D-2
1D.6 SHIPPING NOTICE	1D-3
1D.7 SHIPPING LIST	1D-3
1D.8 CORRECTION OF ERRORS	1D-3
1D.9 QUALITY ASSURANCE	1D-3
Section 2A – ENGINEERING AND PROCUREMENT TECHNICAL REQUIREMENTS	
2A.1 TRANSMITTERS	2A-1
2A.1.1 General	2A-1
2A.1.2 Required Features	2A-1
2A.1.3 General Design Requirements	2A-2
2A.1.4 Transmitter Drawings and Instructions	2A-2
2A.2 VALVE MANIFOLDS	2A-2
2A.3 TEMPERATURE SENSING ELEMENTS	2A-3
2A.4 HAND HELD COMMUNICATORS	2A-3
2A.5 INSTRUMENTATION INSTALLATION ENGINEERING	2A-3
2A.5.1 Mechanical	2A-3
2A.5.2 Electrical	2A-4
2A.5.3 Insulation, Freeze Protection, and Process Heat Tracing	2A-5

TABLE OF CONTENTS
(continued)

	Page
Section 2B – INSTALLATION AND CONSTRUCTION	
2B.1 TRANSMITTER MECHANICAL INSTALLATION	2B-1
2B.1.1 Piping and Tubing Installation	2B-1
2B.1.2 Temperature Sensing Element Installation	2B-1
2B.1.3 Racks Installation, Mounting, and Connection	2B-1
2A.1.4 Testing	2B-2
2B.2 TRANSMITTER ELECTRICAL INSTALLATION	2B-2
2B.2.1 Raceway System Installation	2B-2
2B.2.2 Cable Installation and Termination	2B-5
2B.3 INSULATION, FREEZE PROTECTION, AND PROCESS HEAT TRACING INSTALLATION	2B-7
2B.3.1 Insulation and Jacketing Installation	2B-7
2B.3.2 Freeze Protection and Process Heat Tracing Installation	2B-9
2B.4 AS-BUILT DRAWINGS	2B-11

A - GENERAL INFORMATION

<<NOTE to Spec Developer - Sections A and B below must be compared to the Owner prepared Sections I and II that will be added to ensure that supplied information does not conflict >>

Under this specification, diaphragm type static, differential pressure, and temperature sensing instrumentation shall be furnished and installed for pressure, level, flow, and temperature measurements for power plant air, gas, oil, water steam and other process material applications. Procurement and installation of miscellaneous instrumentation related to measurement of level and flow through ultrasound, radar, or magnetic sensors are not included in this specification.

A.1 INSTRUCTIONS TO BIDDERS. The Bidder shall provide a complete proposal detailing but not necessarily limited to a description of the services, exceptions and/or clarifications to the specifications, fees, rate structures, and terms and conditions which will govern the project. The Contractor shall provide a description of the work package. THE PROPOSAL SHALL INCLUDE THE ESTIMATED MAN-HOURS AND ASSOCIATED COSTS FOR THE PROJECT; THE COSTS SHALL BE CONSIDERED AS FIRM PRICE, WITH NO INCREASES BEING ALLOWED EXCEPT FOR AUTHORIZED CHANGES IN THE SCOPE OF WORK.

The Bidder's proposal shall be based upon the use of equipment and materials complying fully with the requirements specified in this Section. It is recognized that the Bidder may have standardized on the use of certain components, materials, processes, or procedures different than those specified herein. Alternates in addition to the base proposal on the basis of supplying the Bidder's standard components, materials, processes, or procedures will be considered. The alternate proposal shall clearly stipulate the alternate proposed, the specific exceptions to the specification, and the price change applicable for supplying such alternate.

All correspondence, documents, and the bid submittal from the Contractor to ELCEN during the proposal process shall be addressed to:

Type name and address of ELCEN here.

A.2 RIGHT TO REJECT. The right is reserved by ELCEN to reject any or all proposals. In addition, ELCEN may elect to cancel the project for any reason.

A.3 VALIDITY. Contractor's proposal shall remain valid for a period of ( ) days from the proposal due date.

A.4 PROJECT PROCEDURES. The Contractor shall comply with the following procedures for the duration of the Project

A.4.1 Project Team. The Contractor shall have a dedicated Project Manager responsible for the coordination of all project related activities. The Project Manager identified for this

project by the Contractor shall remain in that position throughout the project. Any changes in this key position shall be with the approval of ELCEN.

The Contractor shall include resumes of personnel who would be assigned to the project, project team organization, job descriptions, project experience, and other information that is considered pertinent.

ELCEN reserves the right to request personnel changes if performance/experience becomes an issue.

A.4.2 Scope Change Document. For modified scope changes or additions to the Contractor work, the Contractor shall provide written notification per the contract procedure. ELCEN reserves the right to have any extra work performed on a firm price, not-to-exceed or cost-plus basis. The Contractor shall submit with his proposal a complete rate structure applicable to any work to be performed under this agreement.

The Scope Change Document shall describe the reason for change, the person who requested the change, the original scope and man-hour cost, and the new scope and man-hour cost.

Each Scope Change Document shall be consecutively numbered. Any effects on the engineering schedule and overall project schedule shall be described. **WRITTEN APPROVAL FROM ELCEN IS REQUIRED BEFORE PROCEEDING WITH THE SCOPE CHANGE.**

A.4.3 Invoicing. The Contractor's proposal shall include a description of their invoicing procedures. ELCEN will issue a purchase order to the selected Contractor. Invoices not complete in reference or lacking in backup information will be rejected.

Progress and/or milestone based payments will be made in an amount equal to _____ (__) percent of Work completed with the balance being retainage.

Final payment will be made upon completion and acceptance of the work. Retainage will be paid after all equipment and submittals have been received and accepted following final payment.

A.4.4 Warranty. The Contractor shall provide a warranty on all the hardware, software and services rendered to ensure that the instrumentation and instrumentation installation meets the following requirements:

Be free from defects in design, material, workmanship and title;

Be of the kind, quality and capability designated or described in the Contract;

Perform in the manner set forth in or required by the Contract; and

Have been produced processed, delivered and sold or licensed in conformity with all applicable federal, state and local laws, administrative regulations and orders. The

Contractor shall execute, certify and deliver to ELCEN any documents as may be required to effect or evidence compliance with such federal, state and local laws.

Except for consumable items, the warranty period shall be _____.

During the warranty period, the Contractor shall provide free of charge telephone support for ELCEN users and remote support for Software imperfections.

A.4.5 Performance Guarantee. The performance guarantee shall be in the form of a bank letter of credit for 10% of the contract value, valid until receipt and approval of the Acceptance Documentation; or by retention of 10% of the amount of each invoice, retention to be paid upon receipt and approval of the Acceptance Documentation. If in the form of a bank letter of credit, the performance guarantee should be issued by a bank in Romania, or by a bank abroad with a correspondent in Romania.

A.4.6 Acceptance Documentation. The Contractors shall provide to the Purchaser the Acceptance Documentation (at the end of executions works, at the end of commissioning, at the end of the guarantee period) in accordance with the Romanian legislation in force.

A.4.7 Insurance. The Contractor shall provide full insurance of all software, hardware, etc, against losses or damages during execution, transportation, storage, testing, and commissioning.

B - BID DATA

B.1 GENERAL. Each Bidder shall submit complete definitive information on his proposal offering in sufficient detail to permit a complete technical analysis of the Proposal.

The requirements for information contained in this Section are basic. Additional information shall be provided as requested by the Purchaser.

The scope of supplementary information and equipment data requested herein shall be included in the Proposal to the fullest extent possible at the time of bid submittal. As a minimum, sufficient proposal data shall be submitted to demonstrate compliance with this specification, and to allow a comprehensive evaluation of the bid. Proposals lacking sufficient data to satisfy these requirements will be considered non-responsive. The successful Bidder shall complete all data submittal requests and Proposal data entries for inclusion in the Purchase Order documents prior to the Award of Contract.

B.2 INFORMATION TO BE SUPPLIED WITH BID. The Contractor shall include as a part to the Bid, a listing of all transmitters to be supplied, and the proposed transmitter model numbers.

The Bidder shall also provide the following detailed information as required in other sections of the specification:

- Preliminary Schedule (see 1C.3)
- Alternative Standard Materials (see 1D.1)
- Quality Assurance Program (see 1D.9)

Section 1A - SCOPE OF WORK

1A.1 GENERAL. Under this specification, diaphragm type static, differential pressure, and temperature sensing instrumentation shall be furnished and installed for pressure, level, flow, and temperature measurements for power plant air, gas, oil, water steam and other process material applications.

This section covers the general description, scope of work, and supplementary requirements for the work included under this specification.

The work included under this specification shall be supplied FOB PLANT NAME, PLANT LOCATION.

1A.2 WORK INCLUDED UNDER THIS SPECIFICATION. The Contractor shall include the following:

- Engineering services (1A.5.1)
- Field services (1A.5.2)
- Design conferences (1A.5.3)
- Furnish and install diaphragm type pressure sensing instrumentation and temperature sensing instrumentation as specified on the Transmitter Device List bound in these specifications.
- Furnish and install instrument stands and racks as required.
- Furnish and install tubing, fittings and other installation materials as required.
- Furnish and install freeze protection equipment, materials and wiring.

1A.3 WORK NOT INCLUDED UNDER THIS SPECIFICATION. The following items of work will be furnished by the Purchaser under separate contract:

- Process piping and process taps and piping through root valve(s).
- Thermowell installation.

1A.4 WORK INCLUDED AS OPTIONS UNDER THIS SPECIFICATION. The following items and services shall be furnished as optional work under this specification:

- None

1A.5 CONTRACTOR'S SERVICES. The services called for in WORK INCLUDED UNDER THIS SPECIFICATION and the services inherent to any options purchased by the Purchaser as called for in WORK INCLUDED AS OPTIONS UNDER THIS SPECIFICATION shall be in accordance with the following.

1A.5.1 Submittal of Engineering Data. Drawings and other engineering data for the specified equipment and materials are essential to the design and implementation of the entire project. The Contractor shall submit drawings and engineering data in accordance with the schedule and requirements specified herein to assure compliance with the overall installation and operating schedule.

Contractor design, procurement and delivery schedule shall include two weeks for Purchaser's review of drawings and engineering data. Two-week duration shall be from Purchaser's receipt of drawings and engineering data to Purchaser's submittal to the Contractor upon completion of review.

1A.5.2 Contractor's Field Technical Services. The Contractor shall furnish the services of one or more technical service representatives as specified herein, when requested by the Purchaser. These services are above and beyond the services required by the Contractor to fulfill the requirements of these specifications. The service representatives shall be technically competent and experienced in the installation, calibration and operation of the equipment, and shall be authorized by the Contractor to perform the work stipulated.

1A.5.3 Design Conference. The Contractor shall attend a design conference at a time and place selected by the Purchaser to discuss matters relative to the execution of this Contract. The Contractor shall attend additional design conferences as required by the Purchaser thereafter to execute and/or expedite the work.

1A.6 LANGUAGE, NUMBERS, AND SYMBOLS. All documents of the offer, before signing the contract, shall be in English. After contract signing, all drawings, designs, specifications, manuals, operating instructions, statements, schedules, notices, documents, nameplates, and markings shall be in both the English and Romanian languages. All graphics developed by the Contractor shall be in the Romanian language. Windows operating system graphics may be supplied in English if a Romanian version is not available.

All units of measurement shall be stated in the SI - system. The Contractor shall further be required to employ in all drawings and submittals the same symbols and designations as are used by the Purchaser.

Section 1B – DESIGN DATA AND DRAWINGS

1B.1 GENERAL. This section stipulates the requirements for engineering data and drawings which the Contractor shall submit for design information and review.

1B.2 CORRESPONDENCE. Correspondence on all technical matters shall be addressed to the Purchaser as follows:

Name
Address

Attention: CONTACT NAME

Correspondence on all procedural and commercial matters shall be addressed to the Purchaser as follows:

Name
Address

Attention: CONTACT NAME

Letters of transmittal shall accompany submittals of drawings and engineering data and shall include a list of the data included in the transmittal. Correspondence shall be identified with the project name, plant name and project number. Transmittal of drawings and data shall be as specified in the article entitled DRAWINGS.

1B.3 REVIEW OF ENGINEERING DATA. The Purchaser's review of engineering data will cover only general conformity of the data to the specifications and documents, external connections and interfaces with existing equipment. This review does not indicate a thorough review of all dimensions, quantities, and details of the equipment, material, device, or item indicated or the accuracy of the information submitted. This review shall not be construed as relieving the Contractor from any responsibility for errors or deviations from the requirements of the contract documents.

1B.4 DESIGN DATA. All design data required by this specification shall be submitted as scheduled in Section 1C, unless otherwise specified.

1B.5 DRAWINGS. Wherever possible the Contractor-prepared drawings are to be based on modifications to original plant and control logic drawings. The modifications shall be in sufficient detail to indicate the arrangement, description and operation of component materials and devices; the external connections, and correlation with other equipment.

Drawings to be submitted include all "Certified" drawings by the Contractor, subcontractors, manufacturers, etc., unless specifically excluded by the Purchaser. "Certified" drawings shall mean drawings fully completed and certified by the Contractor as to the compliance of the information contained thereon with the requirements of these specifications. Certified

drawings shall be clearly stamped "Certified" or shall have title block entries clearly indicating the drawing is certified. Certified drawings will be reviewed by the Purchaser and processed as specified in this section.

1B.5.1 Drawing Submittal. ____ (__) of each markup drawing shall be submitted to the Purchaser as follows:

Name
Address

Attention: CONTACT NAME

Markups reviewed by the Purchaser will be returned to the Contractor with corrections or exceptions clearly marked. The Contractor shall make the changes noted thereon and copies of the corrected drawings shall be submitted for review in the same manner as the original submittal.

When the drawings are returned to Contractor with no corrections or exceptions noted the Contractor shall submit drawings for final distribution as specified hereinafter under Final Markup Drawings.

No work shall be performed in connection with the installation of equipment, materials, computer hardware and software until the drawings and data have been reviewed by the Purchaser except at the Contractor's own risk and responsibility. Work may proceed on equipment, materials, computer hardware and software when the drawings and data therefore have been returned with no corrections or exceptions noted; or when drawings have been returned with corrections or exceptions noted, provided the work is performed in accordance with the Purchaser's notations.

If changes are made at the project site to the equipment to correct installation errors, due to design changes or wiring revisions, revised drawings indicating the changes made shall be prepared and submitted to the Purchaser.

1B.5.2 Final Markup (As-Built) Drawings/Software. After receipt from the Purchaser of drawings and software with no corrections or exceptions noted, the Contractor shall transmit ____ (__) prints of the final prints/copies of the final version to the Purchaser for final distribution.

1B.6 INSTRUCTION MANUALS/DOCUMENTATION. The Contractor shall furnish instruction manual and documentation bound in a binder suitable for long term rough usage. Front covers of the manuals shall be permanently marked with lettering indicating Owner's name, plant name, name of equipment, and name of manufacturer.

The manuals shall include the following information specific to each component or piece of equipment supplied by the Contractor:

- Table of Contents and index tabs.

- Name, address, telephone number, and fax number of the local and national service representative and supplier and 24 hour emergency service contact.
- Specifications, test data.
- Description of the equipment.
- Instructions in the methods of receiving, inspection, storage, and handling prior to installation.
- Installation instructions.
- Operating instructions.
- Maintenance instructions.
- Assembly drawings.
- Parts list.
- List of recommended spare parts.
- List of maintenance tools provided with equipment.

The above listed requirements are the minimum. Additional information that is necessary for proper installation, operation and care of the equipment shall also be included.

One copy of the instruction manual shall be submitted to the Purchaser for review. After the manual has been approved, the final ____ (__) copies should be sent to the Owner.

Section 1C - SCHEDULE

1C.1 GENERAL. This section covers the schedule and scheduling requirements for performance and completion of the work included under this Contract.

1C.2 SCHEDULE. Milestone and delivery schedules are defined below. The completion dates indicated are essential to the work under this Contract and to the coordination and continuity of other Owner work activities.

The listing of activities and dates is not intended to be a complete or detailed listing of all work under this Contract or of all interfaces with the work of other contractors.

It is understood and agreed that the dates shown within the Delivery Schedules are the latest feasible completion dates and that earlier dates may be attained as agreed to by the Purchaser and the Contractor.

Milestone	Date
Contract Award	
Engineering/Production/Shipping/Installation Schedule	
Detailed Raceway and Termination Drawings	
Detailed Piping and Tubing Isometrics	
Detailed Insulation, Freeze Protection, and Process Heat Tracing Design Drawings	
Instrumentation On-Site	
Instrumentation Installation Complete	

1C.3 PRELIMINARY SCHEDULE. The Contractor shall submit, as part of his proposal, a preliminary schedule of the work. This preliminary schedule shall include a bar chart showing all major activities. The Contractor shall also submit with his proposal a work plan, which describes the activities in sufficient detail to clearly show his understanding of the concentrated effort and coordination required to complete the work by the scheduled contract completion date

1C.4 CONTRACTOR'S DETAILED SCHEDULE. Within 5 days after the date of contract award, the Contractor shall submit a detailed schedule. The detailed schedule shall be based upon the dates specified in the schedule included herein.

The detailed schedule shall be in bar graph form acceptable to the Purchaser.

The detailed schedule shall contain all activities of the plan, including engineering, acquisition of equipment, and materials, and installation. For all equipment and materials supplied by the Contractor especially for this project, the schedule shall include the sequence of activities including issuance of purchase orders, preparation of drawing markups and delivery. Each activity shall be identified on the schedule by a descriptive title and shall be assigned an estimated number of working days required and an expected completion date.

Schedules returned to the Contractor for revision or correction shall be resubmitted for review within __ calendar days. Upon acceptance by the Purchaser of the detailed schedule of activities, the Contractor will be responsible for maintaining such schedule.

Section 1D – OTHER REQUIREMENTS

1D.1 GENERAL. These requirements apply in general to all equipment and materials, and are supplementary to the technical requirements. If requirements specified herein are in conflict with the requirements specified in the technical requirements, the technical requirements shall govern to the extent of such conflict.

1D.2 REFERENCED STANDARDS. Reference to the standards of any technical society, organization, or association, or to the laws, ordinances, or codes of governmental authorities shall mean the latest standard, code, or specification adopted, published, and effective at the date of taking bids unless specifically stated otherwise in this specification.

The specifications, codes, and standards referenced in this specification (including addenda, amendments, and errata) shall govern in all cases where references thereto are made except where they conflict with this specification. In case of conflict between the referenced specifications, codes, or standards and this specification, the latter shall govern to the extent of such difference.

All engineered equipment manufactured under this specification and the associated engineering for the manufacture shall be in accordance with the codes and standards detailed in the specification sections and the following codes and standards.

For engineered equipment manufactured under this specification and the associated engineering for that engineered equipment, reference in these specifications is made to only USA standards, codes, and specifications, and the equipment, materials, and workmanship furnished under these specifications shall be in accordance with the standards, code, or specification designated. Equivalent standards, codes and specifications of other authorities will be considered when submitted to the Purchaser or Owner's Representative in the English language. If the proposed substitute standards, codes, or specifications are acceptable to the Purchaser and the Owner's Representative, their use will be authorized in writing. In the event the substitute standards, codes, or specifications are not acceptable, the work shall proceed in accordance with USA standards, codes, and specifications designated in the specifications.

Works	**In Accordance With**
Instrumentation / Insulation / Freeze Protection & Process Heat Tracing	ANSI (American National Standards Institute)
	ASME (American Society of Mechanical Engineers)
	ASTM (American Society for Testing Materials)
	FM (Factory Mutual)
	IEEE (Institute of Electrical and Electronics Engineers)
	ISA (Instrument Society of America)
	NEMA (National Electrical Manufacturers' Assoc)
Flanges	ANSI B16.5
Piping	ANSI B31.1 (Power Piping)

All materials furnished and installation procedures used under this specification shall conform with accepted good engineering practice, the codes and standards detailed in the specification sections, standards such as the ANSI Code for Pressure Piping, the appropriate sections of the ASME Boiler and Pressure Vessel Code, applicable NEMA, UL, NEC, and IEEE standards, all federal and state laws and local regulations, and in accordance the following EU, DIN, and Romanian standards

Works	**In Accordance With EU/DIN/Romanian Standards**
Materials Furnished and Installation Procedures	EN 60068-2-38 - Climate Class
	EN 60529 - Protection Class of Housing (IP Code)
	EN 60204-1 - Standard Voltages
	EEC 73/23 - Low Voltage Equipment Directive
	EN 60068-2-64 - Vibration Resistance
	IEC 364-4-41 - Protection Against Electric Shock
	EN 55011 - EMC (Electromagnetic Compatibility) Radio Interference
	EN 61320 - EMC (Electromagnetic Compatibility) Interference Emission/Interference Immunity
	EN 61326 - EMC (Electromagnetic Compatibility) Emissions Compatibility – Appendix A – Industrial Area
	EN 61010 - Protection Measures for Electrical Equipment for Measurements, Control, Regulation and Laboratory Procedures
	DIN 43763 - Form D - Protecting tube for TC's and RTD's,
	EN 13445 - Pressure Vessels,
	EN 12952 - Water-tube boilers
	EN 10216 - Seamless steel tubes
	EN10217 - Welded steel tubes
	C15/00 - Technical prescriptions for designing, executing, installing, operating, repairing and checking the pressure hot water and steam pipes
	C4/90 - Technical requirements for design, construction, erection, operation, repair and inspection of stationary metallic pressure vessels
	C1/99 - Technical prescriptions for design, construction, erection, repair and control of steam and hot water boilers

1D.3 MATERIALS. Unless specifically provided otherwise in each case, all materials and equipment furnished for permanent installation in the work shall conform to applicable standard specifications and shall be new, unused, and undamaged.

1D.4 IDENTIFICATION. All shipping notices and other documents pertaining to the equipment and materials furnished under this specification shall be identified as follows:

ELCEN
ADDRESS

Attention: CONTACT NAME

1D.5 SHIPMENTS. All shipments shall be F.O.B. destination, freight allowed.

The Contractor shall discuss with the Purchaser the routing of shipments and shall route the same as indicated by the Purchaser provided freight rates are no greater than by other routes. Shipments are accepted Monday through Friday from 8:00 a.m. to 4:00 p.m.

All shipments shall be delivered to the Contractor at:

ELCEN
PLANT ADDRESS

Attention: CONTACT NAME

The equipment shall be shipped boxed, crated, or otherwise protected against damage during shipment, handling, and storage at the Project Site. Openings shall be closed with caps, plugs, or other suitable closure devices suitable for rough usage. Packaging shall be suitable to prevent moisture or water damage during shipment and outdoor storage at the Project Site.

The shipping forms must include the following content:

- Fiscal bill (invoice).
- Shipping notice.
- Certificate of origin.
- Factory testing certificate.
- Quality and conformity certificate.
- Guarantee certificate.
- EUR certificate.
- Transport certificate.
- Import statement value.
- Insurance policy-"for all risks".

1D.6 SHIPPING NOTICE. The Contractor shall submit to the Purchaser duplicate copies of shipping notices describing each shipment of material, equipment, computer hardware, or

software. Climate control requirements shall be included. The shipping notices shall be mailed to arrive approximately [redacted] days ahead of the estimated shipment arrival. The addressee for each shipping notice will be CONTACT NAME.

1D.7 SHIPPING LIST. The Contractor shall prepare and submit with the first shipping notice duplicate copies of an itemized materials list covering all material, equipment, computer hardware and software furnished under this specification. The materials list shall be in sufficient detail to permit an accurate determination of the completion of shipment.

1D.8 CORRECTION OF ERRORS. Equipment and materials shall be complete in all respects within the limits herein outlined. All errors or omissions required to be corrected in the field shall be done by the Contractor or his duly authorized representative at the Contractor's expense.

1D.9 QUALITY ASSURANCE. The Contractor shall maintain a quality assurance program that provides that equipment, materials, and services under this specification whether manufactured or performed within the Contractor's plant or at any other source shall be controlled at all points necessary to assure conformance to contractual requirements. The program shall provide for the prevention and ready detection of discrepancies and for timely and positive corrective action. The Contractor shall make objective evidence of quality conformance readily available to the Purchaser. Instructions and records for quality assurance shall be controlled. Evidence of the Contractor's quality assurance program shall be submitted as a part of the proposal.

Section 2A – ENGINEERING AND PROCUREMENT TECHNICAL REQUIREMENTS

2A.1 TRANSMITTERS.

2A.1.1 General. Diaphragm type static or differential pressure instrumentation, and temperature sensing instrumentation shall be furnished for pressure, level, flow, and temperature measurements for power plant air, gas, oil, water steam and other process material applications.

2A.1.2 Required Features. The Contractor shall furnish two wire, diaphragm type pressure, or single/dual temperature sensor type, "Smart," microprocessor based transmitters per the Transmitters Device List at the end of this Section. Transmitters shall include the features specified below.

• Body, Diaphragm Materials	316 stainless steel
• Process Connections	1/2-inch NPT (National Pipe Thread)
• Drain and Vent Valves	Required at all high and low points in the sensing lines.
• Indication	Integral digital meter, calibrated to indicate transmitter output signal
• Housing	Epoxy- or polyurethane-coated aluminum, with rotation up to 180 degrees either direction without disassembly; with separate field terminal and electronics compartments
• Memory	Nonvolatile
• Outputs	Two-wire 4-20 mA analog signal linear with process engineering units. Shall have a HART digital signal superimposed on the analog signal.
• Radio Frequency Interference (RFI) Effect	Less than 0.1% of span for frequencies 27 to 1000 MHz and field intensity of 30 V/m
• Voltage Transient Immunity	Up to 1000 V common mode and 500 V normal mode with output shift less than 1.0%
• Accuracy	±0.10 % or better
• Ambient Conditions	-34 to +82°C
	10 to 100% Relative Humidity (noncondensing)
• Conduit connections	1/2-inch NPT

2A.1.3 General Design Requirements.

2A.1.3.1 Range Selection. The Contractor shall select and furnish the manufacturer's standard range, selected to be at least 20 percent greater than the calibration range listed in the Transmitters Device List.

2A.1.3.2 Calibration. The Contractor shall factory calibrate each transmitter to the engineering range shown in the Transmitter Device List. Calibration shall include factory entry of the transmitter ID and any other data required to commission the transmitter.

The Contractor shall provide each transmitter with a certificate of calibration that identifies it by model number and serial number. The certificate shall include calibration data from at least five span points (0%, 25%, 50%, 75%, and 100%) to document the transmitter's expected and measured current output for the specified pressure measurement range. The certificate shall certify that all tests were performed with equipment whose calibration is directly traceable to the National Institute of Standards and Technology (NIST). Contractor shall include all certificates of calibration in the instruction manuals provided.

2A.1.3.3 Service Conditions. The transmitters shall be constructed to withstand the service conditions of the process systems to which they are connected as listed in the Transmitters Device List at the end of this Section. The Contractor shall confirm the suitability of each instrument for the listed service conditions and immediately advise the Purchaser of any required installation constraints.

2A.1.3.4 Enclosures. Enclosures shall be NEMA 7 rated explosion proof. Each enclosure shall be constructed with two compartments, one for field terminations and one for sensor signal processing circuitry. Enclosures having two conduit connections shall be provided with a connection plug fabricated from metal compatible with the transmitter enclosure.

2A.1.3.5 Coatings and Lubricants. The Contractor shall finish all metallic surfaces subject to corrosion, excluding stainless steel, with the manufacturer's standard paint or plating applied in the shop. The Contractor shall coat ferrous surfaces, which should not be painted and are subject to corrosion, with a rust preventive compound. Surfaces which will be inaccessible after assembly shall be protected for the life of the equipment. Exposed surfaces shall be finished smooth, thoroughly cleaned, and filled as necessary to provide a smooth, uniform base for painting. The surfaces shall be cleaned and prepared in the shop. Purchaser will approve rust preventive compounds.

The Contractor shall apply anti-seize compound or a spray lubricant to all enclosure threads to prevent thread galling.

2A.1.4 Transmitter Drawings and Instructions. The Contractor shall submit drawings and instructions showing dimension data, model number, weight, terminal block arrangement and designation, and any other applicable information, for each instrument, as scheduled in Section 1C.

2A.2 VALVE MANIFOLDS. The Contractor shall furnish manifolds for diaphragm type transmitter as specified in the Transmitters Device List. Manifold mounting brackets shall be

provided as necessary for a complete installation. Manifolds shall meet the following requirements.

- ANSI\ASME B31.1, Power Piping Code.
- 1/2 inch FNPT (Female National Pipe Thread) tube process connections.
- Acceptable manufacturers are Swagelok, Anderson-Greenwood USA, Inc. (AGCO) or Precision General, Inc. (PGI).

2A.3 TEMPERATURE SENSING ELEMENTS. The Contractor shall furnish appropriate temperature sensing elements (thermocouples) as specified in the Transmitter Device List. The temperature sensing elements shall be engineered and procured to be compatible with the following:

- Thermowell diameter at point of support
- Thermowell tip diameter and thickness
- Thermowell bore diameter
- Thermowell insertion length
- Process connection size

Each sensing element shall have a compacted magnesium oxide insulated sheath with a spring to assure positive mechanical contact between the active portion and the bottom of the thermowell. Sensor sheaths shall be constructed of 304 stainless steel. For thermocouple-type sensors, extension wire diameter shall be a minimum of 20 AWG. Sensor assembly design shall facilitate removal of the sensor from the thermowell during normal operating conditions. Each sensor assembly shall be factory tested for open circuits.

2A.4 HAND HELD COMMUNICATORS. The transmitters shall communicate digitally with a hand held programming device for input of configuration data and performing diagnostic functions. The Contractor shall furnish [enter desired quantity] hand held communicators. Each hand held communicator shall be furnished with at least 8 megabytes of memory and a "Data Pack" to allow storing of up to 100 device configurations in removable, nonvolatile memory.

2A.5 INSTRUMENTATION INSTALLATION ENGINEERING.

2A.5.1 Mechanical. The Transmitter Device List included at the end of this section separates the instrumentation into "Replacement" and "New" categories.

For transmitters defined as "Replacement" transmitters, a new transmitter (and manifold for diaphragm type transmitters) shall be installed by the Contractor in place of an existing transmitter. For this installation type the Contractor may reuse the existing piping and tubing to the greatest extent practical.

For transmitters defined as "New", a new transmitter (and manifold for diaphragm type transmitters) shall be installed where no transmitter currently exists. Contractor shall be responsible for complete installation engineering including piping, tubing, fittings, supports, and all other components to complete the detailed design. The Contractor shall complete this detailed design in accordance with the Field Device Process Detail Drawings at the end of this Section. The Contractor's detailed design shall be to the same codes and standards and

use the same materials as the design for similar applications near the new transmitters. The Purchaser has, at the end of this Section, provided information on the location within the plant of each "New" instrument.

The detailed layout of the instrumentation will be determined at the project site The most important design criteria shall be keep the length of the instrumentation piping and tubing as short as possible by placing the transmitter as near to the isolation valve as possible.

The instrumentation piping and tubing shall be of seamless steel construction, and and be designed based on the materials and dimension in the following table:

Material type	**Dimension (mm) outside diameter x thickness**	**Application**
ST35 / ST45 (DIN (W) 1.0305)	10 x 1	Pressure, flow, differential pressure measurements (low pressure and temperature)
	12 x 2	Pressure, flow, differential pressure measurements (low pressure and temperature)
	16 x 2	Oil measurement
	25 x 3	Level measurement (no pressure)
15 Mo 3 (DIN (W) 1.5415)	12 x 2	Pressure measurement (medium pressure and temperature)
	14 x 3 (or 14 x 2,5)	Flow, differential pressure measurements (medium pressure and temperature)
13 Cr Mo 44 (DIN (W) 1.7335)	12 x 2	Pressure measurement (medium pressure, high temperature)
	14 x 3 (or 14 x 2,5)	Flow, differential pressure measurements (medium pressure, high temperature)
	3 x 5	Level measurement (medium pressure)
10 Cr Mo 9.10 (DIN (W) 1.7380)	14 x 3	Pressure, flow, differential pressure measurements (high pressure and temperature)
	25 x 5	Level measurement (high pressure)

Hook-up (Isometric) drawings of the proposed routing of all instrument piping and tubing shall be developed by the Contractor, for review by the Purchaser, and for use during installation. All routings shall provide clearance for insulation and/or freeze protection where required.

The Contractor shall locate pressure instrumentation for steam lines below the process piping. The piping and tubing connecting to the steam line shall slope continuously from the process connection to the instrument such that no traps exist between the process connection and the

instrument. This will create a seal of water between the instrument and the process connection and will also allow all air to escape from the instrument and instrument tubing.

For steam sensing pressure instrumentation which cannot be located below the process connection, the connecting tubing shall be routed so that a loop seal not less than 300mm deep will be formed. Pre-formed siphons, or other acceptable equivalent, may also be used. Loop seals shall be located near the instrument such that blowdown of the sensing connections does not expose the instrument to steam.

Piping and tubing for applications other than steam shall slope continuously from the process connection to the instrument, and all horizontal runs should have a minimum slope of 50mm/m. The preferred direction of slope is downward from process to instrument for liquid piping; and upward for fuel gas, combustion air, flue gas, and compressed air piping. The direction of slope may be reversed by use of appropriate vents or drain connections. Equipment vacuum piping must slope continuously upward from process connection to instrument.

The Contractor shall take thermal expansion of equipment, process piping and sensing lines into account in the installation design. The Contractor shall make provisions in the tubing and piping as required.

2A.5.2 Electrical. For "Replacement" transmitters, the Contractor may reuse the existing raceway and cabling to the greatest extent practical.

For "New" transmitters, new raceway and cabling shall be installed where no transmitter currently exists. Contractor shall be responsible for complete installation engineering of the raceway, raceway fittings and supports, cabling, terminations, and all other components to complete the detailed design.

The Contractor's detailed design shall be to the same codes and standards and use the same materials and equipment as the raceway system and cabling in similar applications near the new transmitters. Any material or equipment that does not meet the above requirements shall be noted on the design documents and must be acceptable to the Purchaser. These design requirements refer to, but are not limited to, the selection of cable tray material and size, conduit material and size, tray and conduit supports, wall and roof penetrations and sealing, cable and jacketing material and size, and termination connector type and size. The Contractor shall be responsible for designing the cable tray support system within the load capacity allowable specified by the manufacturer of the support hardware.

The electrical design shall meet, at a minimum, the following design criteria.

- Cables from the transmitter to junction box shall be of twisted two pair, stranded plain copper 0.5 mm^2 conductor construction, with a static screen of plastic-coated metal, and a stranded 0.5 mm^2 drain wire. The cables shall have flame retardant PVC conductor outer sheaths and cable jacket for low temperature areas or TEFLON conductor outer sheaths and jacket for high temperature areas.
- Cables from junction boxes to the DCS shall be of twisted multi-pair (4-80 pair) stranded plain copper 0.5 mm^2 conductor construction, with a static screen of plastic-coated metal, and a stranded 0.5 mm^2 drain wire. The cables shall have flame retardant PVC conductor outer sheaths and cable jacket

- The Contractor shall use the cable outer diameters for sizing of diameter conduit and flexible conduit. As a rule, the inner diameter of the conduit or flexible conduit is to be approximately 1.5 x that of the cable to be pulled through the conduit or 1.5 x the diameter of the grouped cables to be pulled through the conduit.
- Instrument cables (for control signals ≤ 60 V) must be routed in tray separate from cables carrying all other voltages. The minimum separation from low voltage cables that carry less than one kV must be 300 mm, and the minimum separation distance from low voltage cables that carry more than 1 kV must be 600 mm.

The Contractor may use existing raceway if the raceway does not include medium or high voltage cable that will disrupt the transmitter signal, and the raceway will not be overfilled by the additional cable. The Contractor shall be responsible for confirming to Purchaser that the existing raceway is suitable for re-use.

The Contractor shall modify existing raceway drawings to show the proposed cable routing for "New" transmitters. The Contractor shall also modify existing termination drawings or develop new termination drawings for "New" transmitters. These termination drawings shall show both the field end termination at the transmitter, and terminations for the opposite end of each cable. The Purchaser has, in the Transmitter Circuit List at the end of this Section, provided information for the opposite end termination of each cable. The modified raceway drawings and termination drawings shall be issued for review by the Purchaser, and will be used by the Contractor during installation.

2A.5.3 <u>Insulation, Freeze Protection, and Process Heat Tracing</u>. The Contractor shall design insulation, freeze protection, and process heat tracing for the diaphragm-type instrumentation to be installed, as required to meet the system design conditions of each instrument and the requirements of this Section.

For "Replacement" transmitters the Contractor may reuse any existing insulation, freeze protection, and process heat tracing that currently exists. For this installation type, the Contractor must review the existing insulation, freeze protection, and process heat tracing design for each instrument, and correct any deficiencies with regard to these specifications.

For "New" transmitters the Contractor shall determine the insulation, freeze protection, and process heat tracing design for each instrument to be installed based on the requirements below. The Contractor shall issue the detailed insulation, freeze protection, and process heat tracing designs for Purchaser approval prior to installation.

The Contractor shall base the insulation, freeze protection, and process heat tracing requirements on the most restrictive of the following criteria.

- Insulation and freeze protection shall be required to prevent freezing of water in instrumentation piping and tubing under the following conditions:

Temperature	-10 °C
Wind	50 kph for outdoor equipment
Plant Conditions	Complete shutdown

- Insulation, freeze protection, and process heat tracing for instrumentation piping and tubing shall be of a comparable design to that on the process line to which the instrument is connected.

- Insulation for instrumentation piping and tubing, where contact with personnel during normal plant operation can occur, shall require insulation that limits the insulation outer temperature to less than 50 °C. The insulation on this piping and tubing shall extend at least 6 meters above the floor, platform, or stairway.
- Insulation material for instrumentation piping and tubing shall be selected as follows:
  - Where the temperature is greater then 250 °C
    - Mineral wool (cotton) mats, for piping and tubing with a bare diameter less than50 mm and with the insulated diameter greater than 150 mm
    - Ceramic fiber cord, for piping and tubing with a bare diameter less than 50 mm and with the insulated diameter less than 150 mm
  - Where the temperature is less than 250 °C
    - Molded basalt mineral wool, for piping and tubing with a bare diameter less than 50 mm, irrespective to the insulated diameter

The Contractor's detailed design shall be to the same codes and standards and use the same materials and equipment as the insulation, freeze protection, and process heat tracing design that is used in similar instrumentation applications near the new transmitters. Any material or equipment that does not meet the above requirements shall be noted on the design documents and must be acceptable to the Purchaser. These design requirements refer to but are not limited to the selection of insulation material and thickness, insulation lagging, fasteners, and bands, and insulation supports; and freeze protection and process heat tracing enclosures, tracing material, thermostats, transformers and panel boards.

The Contractor shall use the heat tracing cable manufacture to develop the heat tracing portion of the design. The Contractor may use existing freeze protection/process heat tracing panel boards if such use leaves, at the completion of the addition, a minimum of 10% spare panel board breakers on each panel board, and a minimum of 20% spare load capacity on each panel board.

2A.5.3.1 Insulation, Freeze Protection, and Process Heat Tracing Drawings and Instructions. The Contractor shall submit for Purchaser's review all drawings to be used by the Contractor's forces in constructing the freeze protection and process heat tracing system for diaphragm-type instrumentation. The drawings shall indicate all information necessary for installation and connection of the insulation, freeze protection, and process heat tracing equipment and materials, including, as a minimum, the following information:

- Piping and equipment arrangement in sufficient detail to locate and identify piping and equipment requiring freeze protection and process heat tracing.
- Freeze protection system and process heat tracing system arrangement indicating the location of heat tracing cables on piping and equipment including power connection points and end seals, the location of thermostats and thermostat sensing bulbs, and installation details.
- Heating circuit information consisting of the circuit number; loading data including voltage inrush starting, current, and total power; cable manufacturer and catalog number; and heat tracing cable length.

At the completion of the installation, the Contractor shall provide the Purchaser with as-installed drawings indicating the following:

- Each heat tracing cable circuit individually sketched to show pipe protected, lengths of heat tracing cable, location of control devices, and maximum current requirement in amperes.
- System map indicating location and routing of all freeze protection and process heat tracing system components with each component and heat tracing cable circuit identified.
- Detailed drawings showing installation of the freeze protection panel, transformers, and panel boards. The drawings shall also identify circuit routing and terminations of all power circuitry.

Transmitter Device List			
Procurement Information			Installation Information
Transmitter Description	Calibrated Range	Design Pressure/Temp	Transmitter Tag
Transmitter Type/Process Media	Manifold-TE Required/Type	Test Pressure	Installation Type
Feedwater Flow at Economizer	0- 4000 mm H2O	60 bar / 65 degc	FT-1000
Differential Pressure / Water	Yes / 3 Valve	65 bar	New
Main Steam Pressure	0- 68 bar	70 bar / 650 degc	PT-1004
Static Pressure / Steam	Yes / 2 Valve	100 bar	Replacement
Station Air Pressure	0- 10 bar	15 bar / 40 degc	PT-1005
Static Pressure / Air	Yes / 2 Valve	20 bar	New
Condensate Tank Level	0-10 meters	4 bar / 40 degc	LT-1100
Differential Pressure / Water	Yes / 3 Valve	7 bar	Replacement
Feedwater Heater 1A Inlet	0-150 degc	N/A	TT-1001
Temperature / Feedwater	Yes / Type E	N/A	New
Main Steam Temperature	0-750 degc	N/A	TT-1004
Temperature / Steam	No / Type E	N/A	Replacement

<<NOTE to Spec Developer - The above is only a sample to provide definition of what should be in the table. When completing the specification, remove this note, remove the sample information and add actual transmitter information for each new and replacement transmitter required, adding additional lines as required >>

Transmitter Circuit List		
Circuit Information		Opposite End Termination Information
Circuit Number	Circuit From	+
	Circuit To	-
1C10005	FT-1000	Terminal Block1, Terminal 27
	Cabinet 1A	Terminal Block1, Terminal 28
1C20001	LT-1004	Terminal 10
	Junction Box 10	Terminal 11

<<NOTE to Spec Developer - The above is only a sample to provide definition of what should be in the table. When completing the specification, remove this note, remove the sample information and add actual circuit and termination information for each circuit required, adding additional lines as required >>

Transmitter Location Information	
Transmitter Description	Location
Transmitter 1	Location 1
Transmitter 2	Location 2

<--NOTE to Spec Developer - Provide information on the physical location of each instrument listed as "New" on the Transmitter Device List. This information can be in the form of a table, giving the instrument location elevation, and plant grid location, in the form of a piping and instrumentation drawing, or in the form of a plant equipment layout drawing. If a drawing is used, a hand marked drawing showing the location of each "New" instrument may be used in place of a formal, drafted drawing.-->

(1) INSTRUMENT LINE:

IA: HIGH ENERGY APPLICATIONS (DESIGN PRESSURE ABOVE 950 PSIG) AND HAZARDOUS SERVICE: PIPING TO MATCH THE MATERIAL SPECIFIED FOR THE ASSOCIATED PROCESS PIPING, WITH SOCKET WELD FITTINGS.

IB: NON-HIGH ENERGY APPLICATIONS (DESIGN PRESSURE LESS THAN OR EQUAL TO 950 PSIG) 1/2 INCH O.D., ASTM A213 TP316H STAINLESS STEEL TUBING WITH 0.065 INCH WALL, COMPRESSION FITTINGS.

(2) PIPE TO TUBE ADAPTER:

MALE SOCKED WELD TO 1/2" TUBE. SS SOCKET WELD SIZED TO FIT ROOT VALVE FURNISHED BY OTHERS.
FOR 1/2" USE CAJON SS-8-MPW-A-8TSW
FOR 3/4" USE CAJON SS-12-MPW-A-8TSW
FOR 1" USE CAJON SS-16-MPW-A-8TSW

(3) INSTRUMENT TAKEOFF TEE:

IA: 1/2" X 1/2" STAINLESS STEEL, TUBE SOCKET WELD UNION TEE CAJON SS-8-TSW-3.

IB: 1/2" X 1/2" X 1/2" STAINLESS STEEL, TUBE UNION TEE SWAGELOK SS-810-3.

(4) TWO VALVE MANIFOLD:

SWAGELOK SS-V2BF8-G WITH 1/2" NPT TO 1/2" TUBE MALE CONNECTOR SS-810-1-8 INSTALLED ON PROCESS AND 1/2" NPT TO 1/4" TUBE MALE CONNECTOR SS-400-1-8 INSTALLED ON INSTRUMENT SIDE.

(5) THREE VALVE MANIFOLD:

SWAGELOK SS-V3NBFS8-G, 1/2" TUBE CONNECTOR ON PROCESS AND 1/4" TUBE ON INSTRUMENT SIDE.

(6) NOT USED

(7) BLOWDOWN VALVE:

IA: 1/2" WHITEY SS-12NBSW8T

IB: 1/2" WHITEY SS-12NBS8

SECOND BLOWDOWN VALVE IS REQUIRED FOR ALL INSTRUMENT INSTALLATIONS HAVING A TEST PRESSURE GREATER THAN 900 PSI.

(8) NOT USED

(9) MANIFOLD TO INSTRUMENT CONNECTOR:

1/4" O.D., 0.035 WALL THICKNESS ASTM A213, GR. TP316 SEAMLESS, STAINLESS STEEL TUBING, WITH AN ARRANGEMENT PERMITTING REMOVAL OF THE 1/4" TUBE WITHOUT BENDING BY DISCONNECTING THE BITE TYPE FITTING AT THE INSTRUMENT AND THE MANIFOLD.

(10) PIPE TO TUBE CONNECTOR:

THE APPROPRIATE NPT THREAD SIZE TO ACCOMMODATE REQUIRED INSTRUMENT TO 1/4" TUBE, BITE TYPE, STAINLESS STEEL. SWAGELOK SS-400-1-X MALE CONNECTOR.

BLACK & VEATCH CORPORATION

ENGINEER	DRAWN
JRF	SEM
CHECKED	DATE
	4/04/06

NO	DATE	REVISIONS AND RECORD OF ISSUE	DRN	DES	CHK	PDE	APP
0	4/04/06	INITIAL ISSUE	SEM	JRF			

ELCEN

PROJECT DRAWING NUMBER	REV
140364-DK-1451A	0

FIELD DEVICE PROCESS DETAIL
KEY AND BILL OF MATERIAL SHEET 1 OF 2

CODE

AREA

(11) TEST ELBOW WITH PLUG:

SWAGELOK MALE PIPE TO TUBE CONNECTOR ELBOW BODY
SS-401-2-4 (3 VALVE MANIFOLD APPLICATIONS)
SS-401-2-8 (2 VALVE MANIFOLD APPLICATIONS)
SWAGELOK PLUG SS-400-P

BLACK & VEATCH CORPORATION								
ENGINEER JRF	DRAWN SEM	0	4/04/06	INITIAL ISSUE	SEM	JRF		
CHECKED	DATE 4/04/06	NO	DATE	REVISIONS AND RECORD OF ISSUE	DRN	DES	CHK	PDE	APP

ELCEN	PROJECT DRAWING NUMBER 140364-DK-1451B	REV 0
FIELD DEVICE PROCESS DETAIL KEY AND BILL OF MATERIAL SHEET 2 OF 2	CODE AREA	

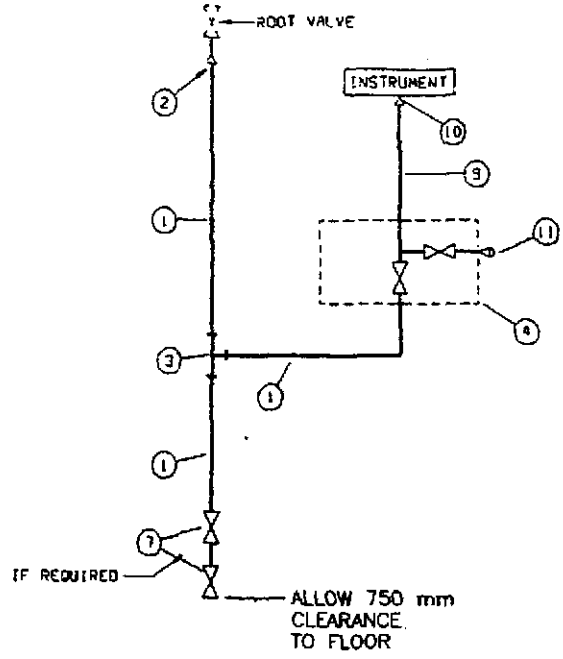

SERVICE: WATER
STEAM
OIL
AIR

LOCAL STATIC PRESSURE INSTRUMENT WITH
INSTRUMENT BELOW PROCESS CONNECTION

BLACK & VEATCH CORPORATION								
ENGINEER JRF	DRAWN SEM	0	4/04/06	INITIAL ISSUE	SEM	JRF		
CHECKED	DATE 4/04/06	NO	DATE	REVISIONS AND RECORD OF ISSUE	DRN	DES	CHK	PDE	APP

ELCEN	PROJECT DRAWING NUMBER 140364-DK-1452	REV 0
FIELD DEVICE PROCESS DETAIL	CODE / AREA	

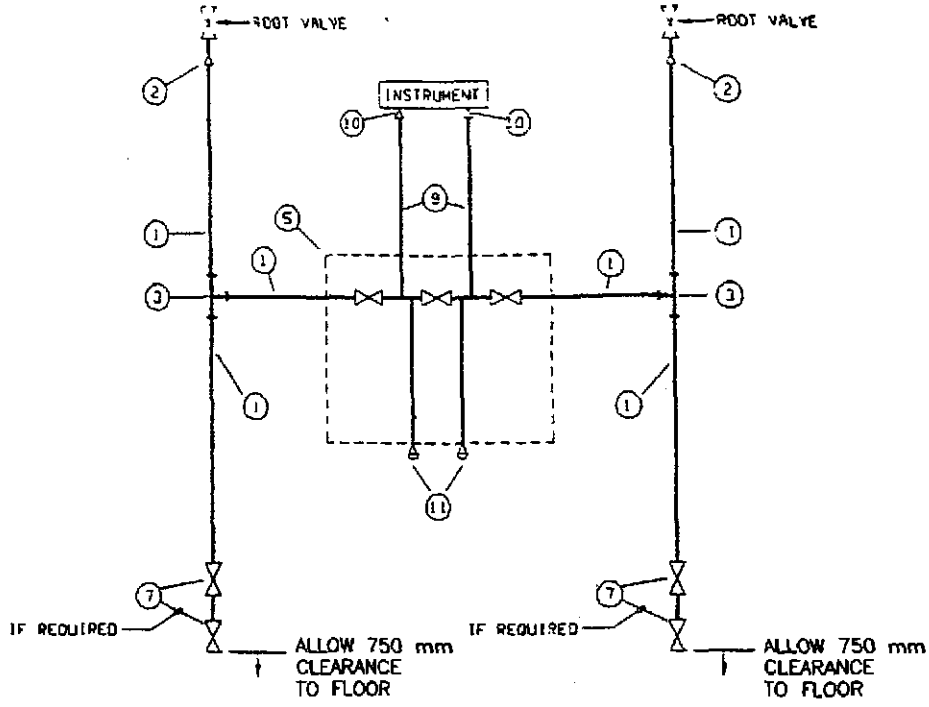

SERVICE: WATER
STEAM
OIL
AIR

LOCAL DIFFERENTIAL PRESSURE INSTRUMENT
WITH INSTRUMENT BELOW PROCESS CONNECTION

BLACK & VEATCH CORPORATION

ENGINEER	DRAWN
JRF	SEM
CHECKED	DATE
	4/04/06

NO	DATE	REVISIONS AND RECORD OF ISSUE	DRN	DES	CHK	PDE	APP
0	4/04/06	INITIAL ISSUE	SEM	JRF			

ELCEN

PROJECT DRAWING NUMBER	REV
140364-DK-1453	0

INSTRUMENT PIPING DETAIL
FIELD DEVICE PROCESS DETAIL

CODE
AREA

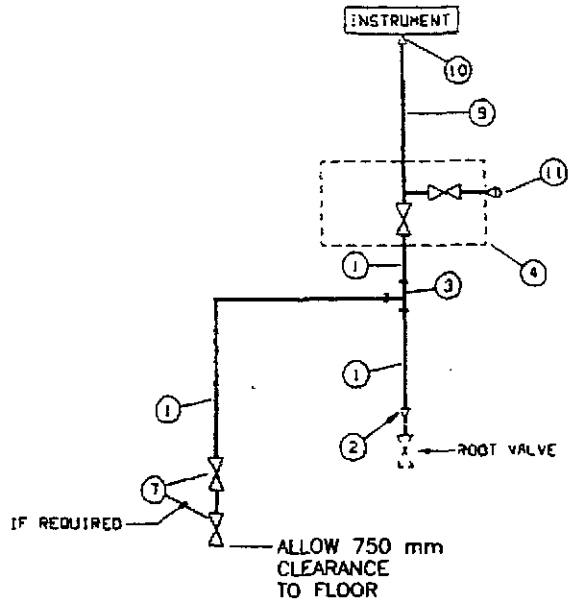

SERVICE: WATER
STEAM
OIL
AIR

LOCAL STATIC PRESSURE INSTRUMENT WITH
INSTRUMENT ABOVE PROCESS CONNECTION

BLACK & VEATCH CORPORATION								
ENGINEER JRF	DRAWN SEM							
CHECKED	DATE 4/04/06	0	4/04/06	INITIAL ISSUE	SEM	JRF		
		NO	DATE	REVISIONS AND RECORD OF ISSUE	DRN	DES	CHK	PDE	APP

ELCEN	PROJECT DRAWING NUMBER 140364-DK-1455	REV 0
FIELD DEVICE PROCESS DETAIL	CODE / AREA	

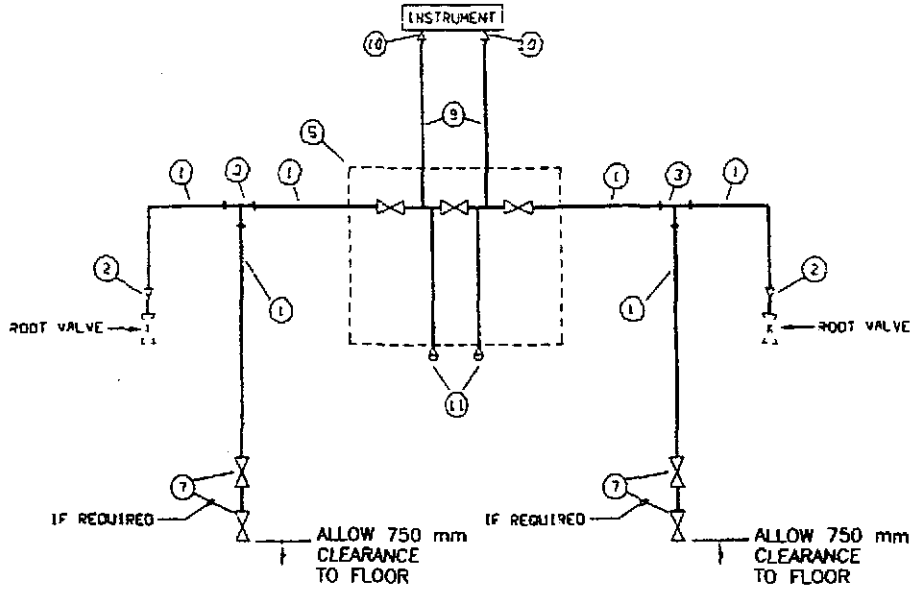

SERVICE: WATER
STEAM
OIL
AIR

LOCAL DIFFERENTIAL PRESSURE INSTRUMENT
WITH INSTRUMENT ABOVE PROCESS CONNECTION

BLACK & VEATCH CORPORATION								
ENGINEER JRF	DRAWN SEM	0	4/04/06		SEM	JRF		
CHECKED	DATE 4/04/06	NO	DATE	REVISIONS AND RECORD OF ISSUE	DRN	DES	CHK	PDE	APP

ELCEN	PROJECT DRAWING NUMBER 140364-DK-1456	REV 0
INSTRUMENT PIPING DETAIL FIELD DEVICE PROCESS DETAIL	CODE AREA	

Section 2B – INSTALLATION AND CONSTRUCTION

2B.1 TRANSMITTER MECHANICAL INSTALLATION. The mechanical installation to be performed shall include the complete piping, tubing, racks, mounting, connection, and testing of the transmitters specified in the Transmitter Device List contained in Section 2A. All mechanical installation shall be done by workmen experienced in this type of work and in accordance with the equipment manufacturer's recommendations and the Contractor's mechanical installation drawings.

This Section of the specification is intended to provide the Contractor with some of the specific requirements for instrumentation installation. It is not intended to provide the Contractor with an exhaustive list of all furnish and install requirements. The Contractor is fully responsible to completely design, furnish, and install the transmitters specified in the Transmitter Device List.

2B.1.1 Piping and Tubing Installation. The Contractor shall furnish and install all piping and tubing for each diaphragm-type instrument as required in Section 2A.5.1.

The Contractor shall furnish and install all blowdown valves, shutoff valves, tees, piping, tubing, fittings, brackets, and other miscellaneous hardware necessary to install the instruments per the Contractor's mechanical installation design.

For transmitters specified as "New" in the Transmitter Device List, where sensing tubing and piping does not currently exist, the Contractor shall also furnish and install all instrument piping and tubing from the process connection shutoff valve to each transmitter.

Special tools shall be used for all bending and forming operations and when cutting tubing. All tubing ends shall be deburred following cutting. Tubing shall be carefully handled to avoid flat spots, kinks, and short bends. Any tubing so damaged shall be replaced. All piping and tubing shall be air blown after erection and before attachment to equipment at either end.

The Contractor shall furnish and install all required piping and tubing supports, in accordance the Contractor's mechanical installation design.

2B.1.2 Temperature Sensing Element Installation. The Contractor shall install all thermocouple elements as required in Section 2A.3.

The Contractor shall assemble and install the complete sensor assembly including physical connection of the thermocouple in the thermowell (supplied by others), head assembly, connection heads with terminal blocks, and extension nipples. The sensor assemblies shall have weatherproof connection heads and nipples. Each sensor assembly shall have standard limits of error (ANSI MC96.1-1982) and shall be single element ungrounded (thermocouples, isolated from ground).

Heads shall be designed for positive connection and for a terminal temperature differential of not more than 0.1° F. Each head shall be internally threaded and fabricated from aluminum.

The assembly head shall be internally threaded, fabricated from aluminum and shall include capability for integrally mounting a temperature transmitter.

The terminated sensors shall be furnished with separate positive and negative terminals for extension wire connection and with a grounding screw for termination of the extension wire shield. Extension nipples shall be 316 stainless steel, 150 mm in length. The connection head cover shall be attached to the connection head with a stainless steel chain. The chain to the cover and the head shall be attached with stainless steel screws or rivets.

2B.1.3 Racks Installation, Mounting, and Connection. The Contractor shall furnish and install all instrument racks and mounting accessories required for the installation of the transmitters, shall mount all transmitters, and shall connect each transmitter to the process.

Transmitters defined as "New" in the Transmitter Device List shall be mounted on new instrument racks. The Contractor shall not mount "New" transmitters to any existing equipment or structure. The Contractor shall furnish and install the instrument racks, and all mounting hardware, brackets, and supports required to mount the transmitters on the new racks.

For transmitters defined as "Replacement" transmitters, the Contractor may reuse the existing mounting supports and/or racks where the construction of the "Replacement" transmitters allow. The Contractor shall furnish and install any additional mounting hardware, brackets, and supports required to use the existing mounting support and/or rack. If the existing mounting support or rack is not usable for a "Replacement" transmitter, the Contractor shall furnish and install a new instrument rack, and all mounting hardware, brackets, and supports required to mount the transmitters on the new rack.

The Contractor shall furnish and install all materials and services necessary, and shall fabricate all new pipe racks. One and two instrument racks are acceptable and shall be fabricated in accordance with the Field Device Process Detail Drawings at the end of this Section. Pipe racks shall steel pipe. Pipe racks shall be 2 inch Schedule 40 minimum with a steel plate baseplate welded to the pipe. Baseplates shall be anchored to the floor or grating. Anchoring or supporting on equipment, equipment bases, piping, pipe supports, and other similar materials will not be permitted. Steel shall be primed and finished with two coats of light gray enamel paint before instruments are installed. All necessary grout, supports, and miscellaneous material required for a complete installation of the equipment shall be furnished and installed by the Contractor

2B.1.4 Testing. The Contractor shall test all new piping and tubing installed under this specification. The tests shall be performed prior to connecting the instrument to the manifold fitting. All work shall be performed in accordance with the following standards.

Works	In Accordance With Standards
New Piping and Tubing Testing	ANSI B 1.1 - Unified screw threads
	ASME B 31.1 - Power Piping
	ANSI B 1.20.1 - Pipe threads
	ASME Section IX - Qualification standard for welding and brazing
	EN 13445 - Pressure Vessels
	EN 12952 - Water-tube boilers
	EN 10216 - Seamless steel tubes
	EN 10217 - Welded steel tubes
	C15/00 - Technical prescriptions for designing, executing, installing, operating, repairing and checking the pressure hot water and steam pipes (p_{test}=1.25 x p_{design} x $R_{adm(20C)}/R_{adm(tdesign)}$),
	C4/90 - Technical requirements for design, construction, erection, operation, repair and inspection of stationary metallic pressure vessels
	C1/99 - Technical prescriptions for design, construction, erection, repair and control of steam and hot water boilers

Where possible, pressure testing of the instrumentation piping and tubing lines shall be performed together with the pressure tests of the system piping. While performing the tests, the Contractor shall ensure that the instrumentation is fully isolated from the piping and tubing being flushed and tested in order to avoid contamination.

In the cases where the instrumentation piping and tubing lines cannot be pressure tested with the main system piping, a Nekat test or hydrostatic test (at 1.3 x the design pressure of system) shall be performed.

All labor and material costs including actual testing, and supply, fabrication, and installation of temporary piping, tubing, and testing equipment, and also all labor and material for the repair of defects found during testing, shall be the responsibility of the Contractor.

Following the testing by the Contractor, the equipment will be tested by the Purchaser to demonstrate its ability to operate under the conditions set forth herein. If the tests indicate that the equipment fails to operate under the conditions set forth herein, the Contractor shall make modifications to correct the operation as part of this specification.

2B.2 TRANSMITTER ELECTRICAL INSTALLATION. The electrical installation to be performed shall include the complete raceway system, cabling, conductor termination, connection to temperature-sensing element (for temperature transmitters) and testing for all

transmitters specified in the Transmitter Device List. All electrical installation shall be done by workmen experienced in this type of work and in accordance with the recommendations of the equipment manufacturer and the Contractor's transmitter electrical installation design drawings.

This Section of the specification is intended to provide the Contractor with some of the specific requirements for electrical installation. It is not intended to provide the Contractor with an exhaustive list of all Contractor furnish and install requirements. The Contractor is fully responsible to design, furnish, and install, complete, the electrical installation for the transmitters specified in the Transmitter Device List.

2B.2.1 **Raceway System Installation**. The Contractor shall furnish and install all raceway required for each instrument per the Contractor's electrical installation design as required in Section 2A.4.2. The raceway system is defined to include conduit, flexible conduit, continuous rigid cable supports called "cable tray" herein, cable tray covers, wireway, cabinets and boxes, and all materials and devices required to install, support, secure, and provide a complete system for support and protection of electrical cables.

2B.2.1.1 Raceway General. The installation of the raceway system shall conform to the following general requirements:

- All raceway routing shall be acceptable to the Purchaser. Raceway that is installed without the approval of the Purchaser, and for which the routing is not acceptable to the Purchaser, shall be removed and re-installed by the Contractor at the expense of the Contractor. Re-installation includes re-pulling and re-terminating cables as necessary.
- The Contractor shall coordinate the location of raceway and raceway supports with other equipment and structures. Raceway shall be routed so the lowest part, including supports and appurtenances, is at least 2 meters above the closest floor or walking surface beneath it, except where it is changing elevation or being lowered to enter equipment.
- Raceway and raceway supports shall be located at least 300 mm from the final outside surface of all steam piping, including insulation, and 150 mm from the final outside surface of all other insulated piping.
- Raceway and raceway supports shall be located so they do not interfere with equipment which expands, vibrates, or moves under normal operation.
- Expansion anchors shall be used to attach raceway supports to overhead concrete surfaces. Raceway supports attached to concrete floors shall be elevated and grouted approximately 25 mm above the finished floor to prevent corrosion caused by exposure to standing water.
- Raceway supports shall be secured to building steel by welding or by drilling and tapping.
- Raceway shall not be attached to grating.
- Penetrations through walls and roofing must be made in locations and in a manner acceptable to the Purchaser. All penetrations made by the Contractor must be sealed in a manner acceptable to the Purchaser.

- Extensions of building structures to support raceway shall be of the same material as the structure being extended and shall be finished to match the finish of the extended structure.
- Beam clamps for attachment of hanger rods to structural steel beams shall be electrogalvanized steel and shall be provided with safety beam anchor straps. Swivels shall be provided where required to prevent bends in the hanger rods.
- Galvanized surfaces which are removed or damaged by cutting, drilling, or any other operation shall be regalvanized using galvanizing spray.

2B.2.1.2 Cable Tray. The installation of cable tray shall conform to the following general requirements:

- The cable tray system shall include all cable tray, fittings, supports, covers and materials for a full installation.
- Cable tray shall be ladder type construction, except when matching existing cable tray of a different construction in an area.
- Solid bottom type construction shall be of a fabricated metal structure with no bottom openings. Tray splice plates shall be high-pressure rigid plate type, connected to the side rails by bolting with bolts designed to prevent rotation during tightening of the nuts.
- For all types of tray installation, nuts shall be flanged serrated lock nuts, lock nuts with serrated washers, or lock nuts with captive washers. Bolt, nut, and washer material shall be as stainless steel. All other hardware and accessories are of the same material as the tray.
- The Contractor shall cut the trays to length as required. The trays shall be cut with saws and all surfaces over which the conductors and cables will be laid shall be ground or filed to remove any sharp edges which could cause damage to the cable jacket or insulation either during installation or in normal service. Areas on which the galvanizing is removed shall be repaired using galvanizing spray.
- Support cross members and bracket supports shall be assembled from strut materials hot-dip galvanized after fabrication.
- Clamps, fastening hardware, and pins shall be corrosion-resistant metal acceptable to the Purchaser. All steel accessories not of stainless steel shall be hot-dip galvanized after fabrication.
- Covers shall be installed on all vertical cable tray and cable tray installed under grating, after cable pulling through the tray is complete. Immediately before installing covers, all debris shall be removed from the tray and the tray vacuumed clean. Joint plates, or acceptable equal, shall be used at all cover joints and at locations where tray covers stop, to prevent the covers from buckling or bowing into the tray. Tray covers shall be secured to the tray using the manufacturer's recommended tray cover clips or clamps. In addition to the clips, at least one bolted connection or screwed connection shall be used on each cover section on vertical tray to prevent the covers from sliding down the tray.
- Where required, tray covers shall be cut or notched to provide clearance around clamps, conduits, and cables as required for proper fit. Cover shall be saw cut. The cut edges shall be filed smooth and re-galvanized. Cover

edges which are in contact with cable shall be covered with grommet material.

- All cable tray installed by the Contractor shall be permanently identified by the Contractor in a manner acceptable to the Purchaser.

2B.2.1.3 Conduit. The installation of conduit shall conform to the following general requirements:

- The conduit system shall include all conduit, pull boxes, junction boxes, fittings, supports, and materials for a full installation.
- Metal conduit, couplings, and elbows shall be hot-dip galvanized rigid steel. The conduit interior and exterior surfaces shall have a continuous zinc coating with a transparent overcoat of enamel, lacquer, or zinc chromate.
- Nonmetallic conduit shall be high impact, polyvinyl chloride and shall be used with plastic conduit fittings. Each length of conduit shall be furnished with one standard coupling. Joints shall be made with solvent cement. All additional conduit couplings, factory bends, plastic-to-steel conduit adapters, solvent cement, and special fittings for the complete conduit system shall be included. Couplings shall have a center stop to ensure proper seating.
- Each length of threaded conduit shall be complete with a coupling on one end and a thread protector on the other. The thread protector shall have sufficient mechanical strength to protect the threads during normal handling and storage.
- Galvanized iron or galvanized steel fittings shall be used with steel conduit. Zinc coated steel fittings shall be used with steel tubing. Electrical metallic tubing fittings shall be compression type, approved for raintight application. All fittings for aluminum conduit shall be copper free aluminum or aluminum alloy.
- A run of conduit shall not contain more than the equivalent of four quarter bends, including those immediately at outlets or fittings. Bends on conduit or tubing shall be made without reducing the internal diameter of the conduit. The use of a pipe tee or vise for bending conduit or tubing will not be permitted. The inside radius of conduit bends shall be not less than six times the inside diameter of the conduit.
- The plane of all conduit ends shall be square with the center line. Where threads are required, they shall be cut and cleaned prior to conduit reaming. The ends of all conduit and tubing shall be reamed to remove all rough edges and burrs. All steel conduit, after threading, shall be re-galvanized with galvanizing spray.
- All conduit installed by the Contractor shall be permanently identified by the Contractor in a manner acceptable to the Purchaser.

2B.2.2 <u>Cable Installation and Termination</u>. The Contractor shall furnish and install cable and terminations for each instrument per the Contractor's electrical installation design as required in Section 2A.4.2. Cable and terminations are defined to include insulated cable, conductors, and conductor termination accessories as needed to provide a complete installation.

2B.2.2.1 Cable Installation. The installation of cable shall conform to the following general requirements:

- Cable installation shall be defined to include placement, support, coiling and taping of spare conductors, and identification of each circuit and cable. Splicing of conductors shall not be permitted unless Contractor obtains prior approval from Purchaser.
- All cable in tray shall be carefully laid in or pulled through the tray system so that neither the cable nor the trays are damaged. Cable may be laid along the side of the tray system during placement provided it is protected from dirt, water, oil, or other detrimental materials and from mechanical injury. Cable shall be cut sufficiently long to conform to the contour of the trays, with particular attention paid to vertical inside bends. All excessive slack shall be removed from the cable so that it lies parallel to the sides of the trays.
- Multiple cables bound together by the Contractor to form a bundle for easy installation shall be separated after installation. The cables shall be laid flat and straight in the cable tray to minimize tray area used.
- The cable shall be tied to the trays with nylon ties at 3 meter intervals to hold it in place. Additional cable ties shall be installed in all vertical fittings to ensure that the cable follows the contour of the tray. Cable ties shall be installed at each end of vertical fittings and at a minimum of two intermediate points.
- All spare conductors of a multi-conductor cable shall be left at their maximum lengths for possible use as replacement of other conductors in the cable. Each spare conductor shall be neatly coiled and then taped to the conductors being used.
- All cable installed by the Contractor shall be permanently identified by the Contractor in a manner acceptable to the Purchaser.

2B.2.2.2 Termination. The termination of cable conductors shall conform to the following general requirements:

- Termination of a conductor shall be defined to include attaching the conductor at its designated location, including the use of accessories such as connectors, insulating materials, support grips, markers, and cable ties.
- Terminal connectors shall be pre-insulated, ring lug, compression type connectors properly sized for the conductor and the terminal. The interior surface of the connector wire barrel shall be serrated, and the exterior surface of the connector wire barrel shall be provided with crimp guides. Pre-insulated terminal connectors shall have a vinyl insulating sleeve, color coded to indicate conductor size.
- Crimping tools used to secure conductors in compression type connectors or terminal lugs shall be those made for that purpose and for the conductor sizes involved. The crimping tools shall accurately crimp the connector barrel and shall accurately crimp the conductor insulation support sleeve if provided. Crimping tools shall be a product of the connector manufacturer or shall be as recommended by the connector manufacturer and acceptable to the Purchaser for use with the connectors.

- No splices shall be made in conductors for instrument circuits or control circuits without specific acceptance by the Purchaser. Splices shall be acceptable for connections to accessory devices equipped with factory installed pigtails or where high temperature wire is necessary to connect to a particular device.

2B.2.2.3 Testing. The Contractor shall electrically test all cables installed under this specification after placement. All cable testing activities shall be completed prior to commencement of startup and turnover activities.

All testing equipment, all labor and material costs for the supply, installation, and removal of the testing equipment, and also all labor and material for the repair of defects found during testing, shall be the responsibility of the Contractor.

All circuits shall be tested with the circuit complete except for connections to equipment, and any circuit failing to test satisfactorily shall be replaced or repaired and then re-tested.

2B.2.2.3.1 Continuity and Identification Testing. All insulated conductors shall be tested for continuity and conductor identification. Continuity tests shall include all tests necessary to confirm that each conductor is continuous throughout its entire length. Identification tests shall include all tests necessary to confirm that the conductor being investigated originates and terminates at the locations designated in the Circuit List.

2B.2.2.3.1 Insulation Testing. Conductor insulation resistance shall be measured with a 1000 volt megger or an equivalent testing device. Insulation resistance measurements shall be made between each conductor and ground and between each conductor and all other conductors of the same circuit. Minimum acceptable resistance values shall be 500 megohms.

2B.3 <u>INSULATION, FREEZE PROTECTION, AND PROCESS HEAT TRACING INSTALLATION.</u> The insulation, freeze protection, and process heat tracing installation to be performed shall include the complete installation of insulation and jacketing, and the complete installation and testing of freeze protection and process heat tracing for all piping and tubing for the diaphragm-type transmitters specified in the Transmitter Device List. All installation shall be done by workmen experienced in this type of work and in accordance with the recommendations of the equipment manufacturer and the Contractor's insulation, freeze protection, and process heat tracing installation detailed design drawings.

This Section of the specification is intended to provide the Contractor with some of the specific requirements for instrumentation piping and tubing insulation, freeze protection, and process heat tracing installation. It is not intended to provide the Contractor with an exhaustive list of all Contractor furnish and install requirements. The Contractor is fully responsible to design, furnish, and install, complete, the piping and tubing insulation, freeze protection, and process heat tracing for all transmitters specified in the Transmitter Device List.

All equipment and structures shall be adequately protected from damage due to insulation materials. After completion of the work, all equipment and structures shall be cleaned, repaired, and restored to their original state.

2B.3.1 Insulation and Jacketing Installation. The Contractor shall furnish and install all piping and tubing insulation and jacketing materials for each instrument per the Contractor's detailed design as required in Section 2A.4.3.

All miscellaneous materials required for complete field installation of insulation and jackets shall be furnished and installed under these specifications. This shall include but not be limited to such items as insulating and finishing cements, sealers, plastic insulation materials, moisture barrier materials, wire, straps, bands, insulation lugs and special supports, pins, clips, meshes, jacket attachment screws, and neoprene washers.

It is anticipated that some of the existing insulation adjacent to new work may be damaged to a condition requiring repairs to achieve a durable finished job. The Contractor shall furnish original installation type materials, and shall patch such damage as a part of this specification.

2B.3.1.1 Insulation. The installation of insulation shall conform to the following general requirements:

- Insulation shall not be applied over damp, wet, or frosted surfaces. All surfaces to be insulated shall be clean and dry prior to application of the insulation and all testing on the piping shall have been completed.
- Preformed pipe insulation shall be used on piping and tubing systems and shall be hollow cylindrical shapes split in half lengthwise or curved segments.
- Insulation shall completely fill all spaces. Cracks, voids, and depressions shall be filled with insulating cement suitable for the piping temperature. The surfaces shall be smooth and uniform before application of outer coverings.
- Double thickness insulation shall be applied with the longitudinal and circumferential joints of the two layers staggered. Each layer shall be separately wired or strapped as described above and all cracks, voids, and depressions shall be filled in the first layer before application of the outer layer.
- Ends of pipe insulation shall be stopped a sufficient distance from flanges to permit bolt removal clearance.
- Insulation on bends shall be cut into sections sufficiently short to form a reasonably smooth exterior. After the insulation is in place, it shall be coated as required with insulating cement to form a smooth surface.
- Elbows may be insulated as described above or may be insulated by means of specially molded insulating enclosures.
- Joints in insulation shall be designed with provisions for expansion to prevent damage to the insulation. Expansion spaces shall be of sufficient gap and provided in sufficient number to absorb the expansion and contraction movements of the piping and tubing. Expansion spaces shall be tightly packed with compressible mineral fiber wool insulation. Expansion spaces on double layer insulation shall be staggered.
- The Contractor shall enlarge all grating penetrations as required to allow for pipe and tubing insulation and full thermal movement of the pipe and tubing.

- When existing facilities will interfere with equipment insulation, including allowance for the expected movement of insulated piping and tubing and adjacent piping systems during plant operation, the insulation shall be cut back and the lagging shall be modified to avoid contact with the existing facilities. Existing facilities shall include, but not necessarily be limited to, piping, electrical conduit and cable tray, buildings and structures components, sleeves, handrail, grating, and plant equipment. All such modifications to insulation and lagging shall be done only with the prior consent of the Owner and shall be performed at no additional cost.

2B.3.1.2 Insulation Jacketing. The installation of insulation jacketing shall conform to the following general requirements:

- All piping and tubing insulation shall be completely covered with jackets so there is no exposed insulation.
- Exposed ends of piping and tubing insulation shall be provided with flat covers attached by a rolled seam.
- All jacket material shall be smooth sheet plain finished or shall have a stucco embossed finish to match existing lagging. Jacketing sheets shall be machine rolled and formed to accurately fit insulation curvatures.
- All insulated standard radius bends and elbows shall be jacketed with preformed smooth elbow jackets.
- All insulated long radius bends shall be jacketed using spiral wrapped strips or individual mitered segment gores cut to fit the insulation shapes applied in either instance over a continuous freshly applied coating of aluminum pigmented mastic. Jacketing strips shall be attached using screws.
- Joints in insulation jacketing shall be designed with provisions for expansion to prevent damage to the insulation. Expansion spaces shall be of sufficient gap and provided in sufficient number to absorb the expansion and contraction movements of the piping and tubing. Jacketing joints shall be lapped and sealed with nonsetting cement, or shall be provided with self-sealing bands or other acceptable provision made which will absorb the relative jacket movement.

2B.3.2 Freeze Protection and Process Heat Tracing Installation. The Contractor shall furnish and install freeze protection and process heat tracing materials for each instrument per the Contractor's detailed design as required in Section 2A.4.3.

All miscellaneous materials required for complete field installation of freeze protection and process heat tracing shall be furnished and installed under these specifications.

2B.3.2.1 Freeze Protection and Process Heat Tracing Equipment. The Contractor shall furnish and install all of the components for a complete freeze protection and process heat tracing system. This shall include but not be limited to the quantity of each type of heat tracing cable, termination kits, thermostats, transformers, instrument freeze protection enclosures, miscellaneous hardware, adhesive tape, and other items as required for the complete installation.

The installation of freeze protection and process heat tracing shall conform to the following general requirements:

- The Contractor perform a continuity test on each coil of heat tracing cable immediately upon its receipt from the supplier to verify that the parallel conductors are continuous throughout the length of the cable.
- The heat tracing cable shall be cut to length at the project site to meet the requirements of the pipelines and equipment as installed. Circuit lengths shall not exceed the manufacturer's recommendations.
- The heat tracing cable shall be installed as indicated on the drawings and in accordance with the manufacturer's recommendations.
- Allowance for pipeline thermal expansion shall not be provided by forming loops in the heat tracing cable. A normal installation will contain sufficient irregularities to allow for expansion between attachment bands.

2B.3.2.2 Freeze Protection and Process Heat Tracing Electrical. The Contractor shall furnish and install all of the components for a complete freeze protection and process heat tracing electrical system. This shall include but not be limited to transformers and panelboards, raceway system and cable, miscellaneous hardware, and other items as required for a complete electrical installation.

A raceway system shall be included for all power feeds from the freeze protection and process heat tracing power panels to individual heat trace circuits. This shall include all tray and rigid and flexible conduit, including fittings and supports. The raceway system installation shall also conform to all of the requirements as specified in Section 2.B.2.1

Cable shall be included for all freeze protection control and power conductors. This shall include power cables to the freeze protection transformers, cables between the transformer and the freeze protection panelboards, and cables from the panelboards to individual heat trace circuits. The Contractor shall also make all required cable terminations. The cable and terminations shall also conform to all of the requirements as specified in Section 2.B.2.2

2B.3.2.3 Testing. The Contractor shall test all new freeze protection and process heat tracing installed under this specification.

The Contractor shall perform tests on the heat tracing cables after installation to verify that the cable was not damaged during installation and to provide information to the Owner for future reference. Tests shall be performed after attachment of the heat tracing cable but prior to application of thermal insulation, and final testing shall be repeated after insulation has been applied. The tests shall as a minimum verify that none of the heat tracing cable conductors are shorted to another conductor, to the protected pipeline or equipment, or to ground, and shall measure the resistance between cable conductors.

If the tests performed prior to application of the insulation indicate that the cable has been damaged, the Contractor shall repair or replace the cable until the installation tests acceptably. If the tests performed after the application of insulation indicate that the cable has been damaged, the Contractor shall repair or replace the heat tracing cable and pipe and tubing insulation until the installation tests acceptably.

All labor and material costs including actual testing, and supply and installation of temporary testing equipment, and also all labor and material for the repair of defects found during testing, shall be the responsibility of the Contractor.

The Contractor shall prepare complete reports of the results of all heat tracing cable tests and measurements. The reports shall include, as a minimum, the date of each group of tests, identification of the cable being tested, a description of any cable damage detected and the corrective action taken, and the measured value of resistance.

Following the final testing by the Contractor, the equipment will be tested by the Purchaser to demonstrate its ability to operate under the conditions set forth herein. If the tests indicate that the equipment fails to operate under the conditions set forth herein, the Contractor shall make modifications to correct the operation as part of this specification.

2B.4 AS-BUILT DRAWINGS. The Contractor shall maintain one full size set of all mechanical, electrical, and freeze protection/process heat tracing construction drawings in his central office at the jobsite as an as-built set. This as-built set shall contain all marks necessary to locate and identify any installations that are not completed in accordance with the drawings. These drawings shall be updated weekly to agree with the actual field installation. At the completion of construction activities, the contractor shall electronically update the revised drawings to reflect all as-built marks. The Contractor's electronically updated as-built drawings shall be turned over to the Owner after as-built updates are completed

NOTES:

1. INSTRUMENT STAND TO BE GALVANIZED.
2. COLD SPRAY GALVANIZE ANY REPAIR AFFECTED AREAS TO PROTECT AGAINST CORROSION.
3. WHENEVER POSSIBLE THE STANDS SHOULD BE WELDED TO STEEL OR GROUTED TO CONCRETE.
4. STAND HEIGHT IS TYPICALLY 1.25m.
5. SUPPORT AS REQUIRED TO MINIMIZE STAND VIBRATION
6. ARC WELDING CONSTRUCTION
7. INSTRUMENT STAND MAY BE INSTALLED ON EITHER CONCRETE FLOOR OR ON PLATFORM GRATING.
8. MINIMUM OF TWO (2) GUSSETS REQUIRED.

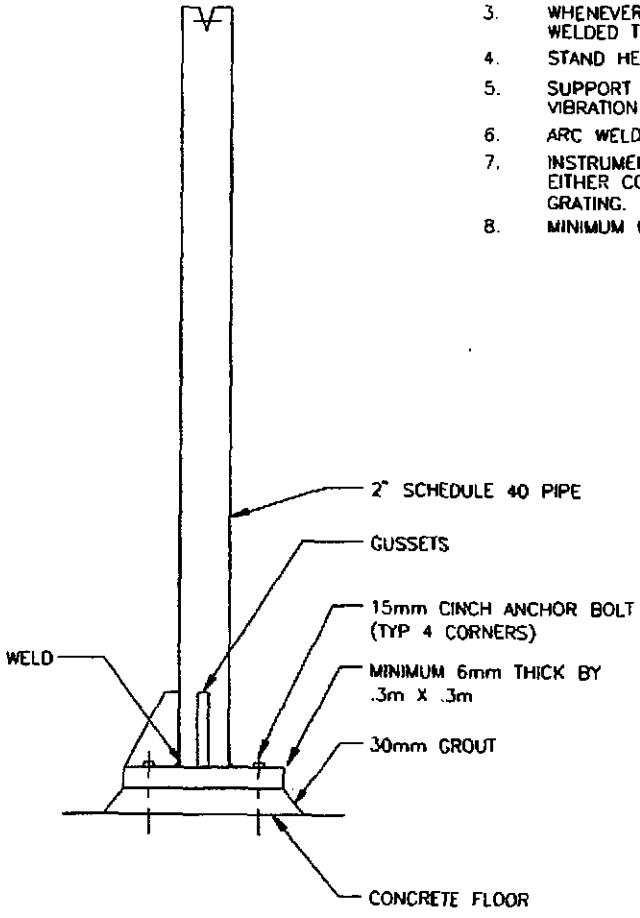

INSTRUMENT STAND DETAIL
NOT TO SCALE

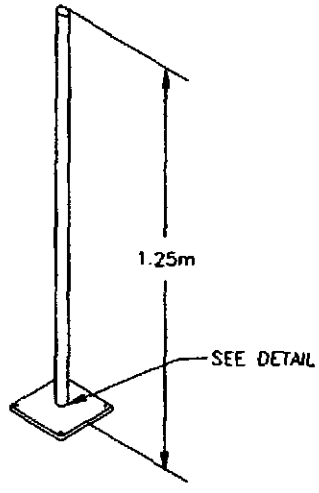

FLOOR MOUNT (ONE INSTRUMENT)

INSTRUMENT RACK FABRICATION

BLACK & VEATCH CORPORATION

ENGINEER JRF	DRAWN SEM
CHECKED	DATE 4/04/06

NO	DATE	REVISIONS AND RECORD OF ISSUE	DRN	DES	CHK	PDE	APP
0	4/04/06	INITIAL ISSUE		JRF	SEM		

ELCEN

PROJECT DRAWING NUMBER: 140364-DK-1454A

REV: 0

FIELD DEVICE PROCESS DETAILS
INSTRUMENT RACK (ONE INSTRUMENT)

CODE

AREA

NOTES:

1. INSTRUMENT STAND TO BE GALVANIZED.
2. COLD SPRAY GALVANIZE ANY REPAIR AFFECTED AREAS TO PROTECT AGAINST CORROSION.
3. WHENEVER POSSIBLE THE STANDS SHOULD BE WELDED TO STEEL OR GROUTED TO CONCRETE.
4. STAND HEIGHT IS TYPICALLY 1.25m.
5. SUPPORT AS REQUIRED TO MINIMIZE STAND VIBRATION
6. ARC WELDING CONSTRUCTION
7. INSTRUMENT STAND MAY BE INSTALLED ON EITHER CONCRETE FLOOR OR ON PLATFORM GRATING.
8. MINIMUM OF TWO (2) GUSSETS REQUIRED.

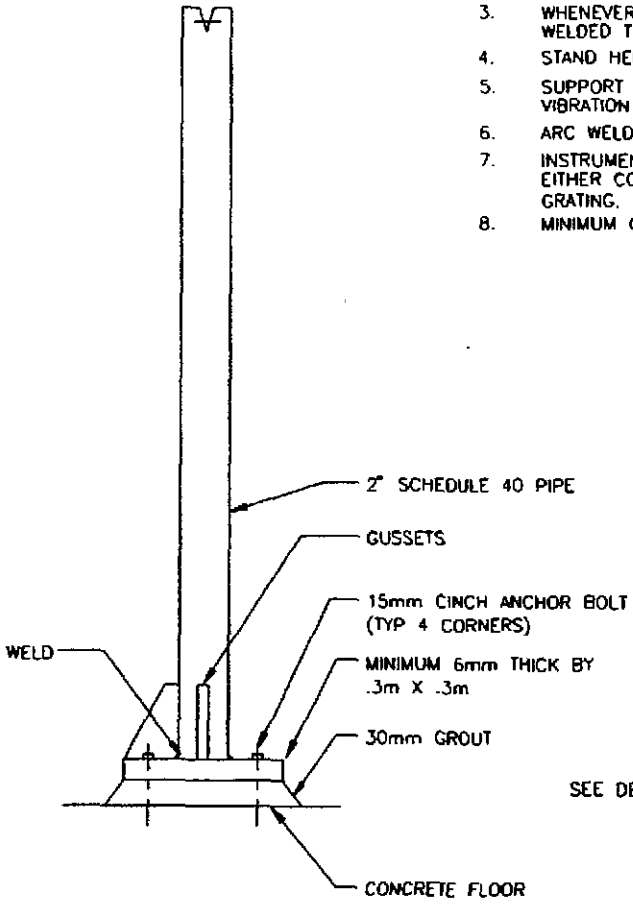

INSTRUMENT STAND DETAIL
NOT TO SCALE

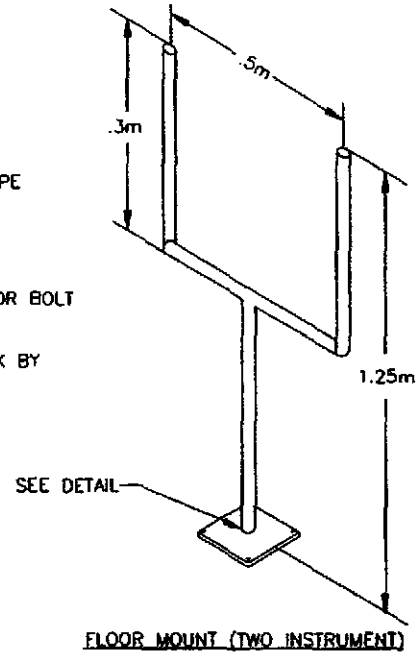

FLOOR MOUNT (TWO INSTRUMENT)

INSTRUMENT RACK FABRICATION

BLACK & VEATCH CORPORATION							
ENGINEER JRF	DRAWN SEM						
CHECKED	DATE 4/04/06	0	4/04/06	INITIAL ISSUE	JRF	SEM	
		NO	DATE	REVISIONS AND RECORD OF ISSUE	DRN	DES	CHK	PDE	APP

ELCEN	PROJECT DRAWING NUMBER 140364-DK-1454B	REV 0
FIELD DEVICE PROCESS DETAILS INSTRUMENT RACK (TWO INSTRUMENT)	CODE / AREA	

FINANCIAL PROPOSAL

ELCEN

GENERATING PLANT NAME

TRANSMITTERS
For PRESSURE, FLOW, LEVEL and TEMPERATURE

RFP NO.
PROJECT

BID ISSUE
(REV 0)

building a world of difference™ | BLACK & VEATCH

FP - FINANCIAL PROPOSAL

FP.1 TOTAL FIRM PRICE. Contractor shall provide a total firm price for all materials, labor and services covered by under the base proposal. All prices shall be specified in EURO.

TOTAL FIRM PRICE _____

FP.2 PRICE BREAKDOWN. Contractor shall provide a price breakdown as follows for all items included in the base and optional scope of service. All prices shall be specified in EURO.

Item	Price
Transmitters	
Installation Engineering	
Construction Materials	
Construction	

FP.3 LABOR RATES. Contractor shall provide labor rates by position applicable to the project. All rates shall be specified in EURO per man-hour. All expenses shall be at actual cost. Contractor shall provide all labor rates necessary to cover all scope changes during execution of the project.

Position	Straight Time	Overtime	Sundays & Holidays
Project Manager			
Project Engineer			
Engineer			
Field Installation Supervisor			
Field - Mechanical Installation Personnel			
Field – Electrical Installation Personnel			
Field – Instrumentation Technical Personnel			
Other (As defined by Contractor)			

FP.4 EXCEPTIONS TO THE SPECIFICATION. The Contractor shall certify that he agrees to all provisions of the Specification and Bid Documents and clearly list any exceptions under the title of EXCEPTIONS in the Proposal. Bidder's terms and conditions are not considered specific exceptions. If exceptions are taken, identify the page(s) of the proposal that apply.

FP.5 SUBCONTRACTORS. This bid is based upon the use of the following subcontractors:

Trade	Subcontractor

All technical requirements and all commercial terms and requirements must be followed by all subcontractors as well as by the Contractor.

SIGNATURE OF BIDDER

Corporation Name: _____

By Authorized Person: _____

Title: _____

Business Address: _____

_____

_____

_____

SECTION III
TECHNICAL REQUIREMENTS BOOK

ELCEN

GENERATING PLANT NAME

DISTRIBUTED CONTROL SYSTEM

RFP NO. _____
PROJECT_____

BID ISSUE
(REV 0)

building a world of difference™ | BLACK & VEATCH

TABLE OF CONTENTS

Part	Title	Pages
III.	SPECIFICATIONS	
A - GENERAL INFORMATION		
A.1	INSTRUCTIONS TO BIDDERS	A-1
	A.1.1 General	A-1
	A.1.2 Definitions	A-1
	A.1.3 Copies of Bidding Documents	A-1
	A.1.4 Examination of Contract Documents	A-1
	A.1.5 Submission of Bid	A-2
	A.1.6 Interpretations and Addenda	A-2
	A.1.7 Preparation and Submission of Bids	A-2
	A.1.4 Examination of Contract Documents	A-2
A.2	RIGHT TO REJECT	A-4
A.3	VALIDITY	A-4
A.4	PROJECT PROCEDURES	A-4
	A.4.1 Project Team	A-4
	A.4.2 Scope Change Document	A-4
	A.4.3 Invoicing	A-5
	A.4.4 Warranty	A-5
	A.4.5 Performance Guarantee	A-5
	A.4.6 Acceptance Documentation	A-6
	A.4.7 Insurance	A-6
B – BID DATA		
B.1	GENERAL	B-1
B.2	INFORMATION TO BE SUBMITTED WITH BID	B-1
	B.2.1 Equipment and Materials	B-1
	B.2.2 Supplementary Information	B-1
B.3	SUPPLEMENTARY INFORMATION	B-1
B.4	FUEL QUALITY IMPACT SOFTWARE DATA	B-3
Section 1A - GENERAL DESCRIPTION AND SCOPE OF THE WORK		18 Pages
1A.1	THE PROJECT	1A-1
	1A.1.1 Project Design Rules and Guidelines	1A-1
1A.2	WORK INCLUDED UNDER THESE SPECIFICATIONS	1A-2
1A.3	MISCELLANEOUS MATERIALS AND SERVICES	1A-3
	1A.3.1 Components and Connections	1A-3
	1A.3.2 Technical Services	1A-3
	1A.3.3 Planning Conferences	1A-7

1A.3.4 Factory Acceptance Testing 1A-7
1A.3.5 Recommended Spare Parts 1A-7
1A.4 WORK NOT INCLUDED UNDER THESE SPECIFICATIONS 1A-7
1A.5 LANGUAGE, NUMBERS AND SYMBOLS 1A-7

Section 1B - DESIGN DATA AND DRAWINGS 3 Pages

1B.1 GENERAL 1B-1
1B.2 CORRESPONDANCE 1B-1
1B.3 REVIEW OF ENGINEERING DATA 1B-1
1B.4 DESIGN DATA 1B-1
1B.5 DRAWINGS 1B-1
1B.5.1 Drawing Submittal 1B-2
1B.5.2 Final Markup Drawings/Software 1B-2
1B.6 INSTRUCTION MANUALS/DOCUMENTATION 1B-2

Section 1C - SCHEDULE 2 Pages

1C.1 PROJECT SCHEDULE 1C-1
1C.1.1 Engineering Schedule 1C-1
1C.1.2 Procurement/Production/Shipping Schedule 1C-1
1C.1.3 Construction Schedule 1C-1
1C.1.4 Schedule of Activities 1C-1
1C.1.5 Definition of Final Acceptance 1C-2

Section 1D - OTHER REQUIREMENTS 2 Pages

1D.1 GENERAL 1D-1
1D.2 REFERENCED STANDARDS 1D-1
1D.3 MATERIALS 1D-4
1D.4 IDENTIFICATION 1D-4
1D.5 SHIPMENTS 1D-4
1D.6 SHIPPING NOTICE 1D-4
1D.7 SHIPPING LIST 1D-5
1D.8 CORRECTION OF ERRORS 1D-5
1D.9 QUALITY ASSURANCE 1D-5

Section 2A - ENGINEERING DESIGN AND DOCUMENTATION 6 Pages

2A.1 GENERAL 2A-1
2A.2 CONTROL SYSTEM UPGRADE ENGINEERING 2A-1
2A.2.1 Input/Output (I/O) Database 2A-1
2A.2.2 I/O Partitioning 2A-1
2A.2.3 Operator Control Console 2A-3
2A.2.4 General Engineering 2A-3
2A.2.5 DCS Equipment and Configuration Design and Drawings 2A-3
2A.3 CONTROL SYSTEM REPLACEMENT INSTALLATION 2A-4
2A.3.1 Control Room Modifications 2A-4

2A.3.2 Control Equipment Room Modification	2A-4
2A.3.3 Design and Drawings for New Installations	2A-4
2A.3.4 Design and Drawings for Interfaces With Existing Facilities	2A-4
2A.3.5 Revision of Existing Schematic Wiring Diagrams	2A-5
2A.4 EXISTING PLANT DOCUMENTATION	2A-5
2A.5 AS-BUILT DOCUMENTATION	2A-6
Section 3A - CONTROL SYSTEM EQUIPMENT	78 Pages
3A.1.1 – NOT USED	
3A.2.1 - DISTRIBUTED CONTROL SYSTEM - TECHNICAL SPECIFICATION	74 Pages
3A.2.1.1 System Requirements	3A-1
3A.2.1.1.1 System Acceptability	3A-3
3A.2.1.1.2 System Integrity	3A-4
3A.2.1.1.3 Failure Modes	3A-5
3A.2.1.1.4 System Timing	3A-5
3A.2.1.1.5 System Spare Capacity	3A-6
3A.2.1.1.6 Service Conditions	3A-7
3A.2.1.2 Processing Functions	3A-7
3A.2.1.2.1 Input/Output Processing	3A-7
3A.2.1.2.2 Input Calculation Processing	3A-7
3A.2.1.3 Modulating (Continuous) Control Functions	3A-8
3A.2.1.3.1 Operator Interface Functions	3A-9
3A.2.1.3.2 General System Performance	3A-10
3A.2.1.4 Discrete (Sequential) Control Functions	3A-10
3A.2.1.4.1 Motor Control Functions	3A-10
3A.2.1.4.2 Burner Control Functions	3A-11
3A.2.1.4.3 Fail-safe Protection Functions	3A-11
3A.2.1.4.4 Operator Interface Functions	3A-12
3A.2.1.4.4 Device Tag-out Function	3A-12
3A.2.1.5 Alarm Functions	3A-13
3A.2.1.5.1 Analog Alarm Functions	3A-13
3A.2.1.5.2 Digital Alarm Functions	3A-13
3A.2.1.5.3 System Alarms	3A-13
3A.2.1.5.4 Alarm Annunciation	3A-14
3A.2.1.6 Calculations	3A-14
3A.2.1.6.1 Real-Time Variable Calculations	3A-14
3A.2.1.6.2 Performance Calculations	3A-15
3A.2.1.7 Control and Information Display Functions	3A-16
3A.2.1.7.1 Trend Displays	3A-16
3A.2.1.7.2 Bar Chart Displays	3A-16
3A.2.1.7.3 X-Y Plot Displays	3A-17
3A.2.1.7.4 Process Control Displays	3A-17
3A.2.1.7.5 Faceplate Displays	3A-18
3A.2.1.7.6 Text Displays	3A-19
3A.2.1.7.7 Group Displays	3A-19

3A.2.1.7.8 Alarm Displays 3A-19
3A.2.1.7.9 System Displays 3A-20
3A.2.1.7.10 Summaries 3A-20
3A.2.1.8 System Data Reporting Functions 3A-20
3A.2.1.8.1 Periodic Reports 3A-21
3A.2.1.8.2 Trend Reports 3A-21
3A.2.1.8.3 Post-Trip Review Report 3A-21
3A.2.1.8.4 Maintenance Data Report 3A-21
3A.2.1.8.5 Housekeeping Report 3A-21
3A.2.1.8.6 Sequence-of-Events Report 3A-21
3A.2.1.8.7 User Reports 3A-21
3A.2.1.9 Historical Data Functions 3A-22
3A.2.1.9.1 Short-Term (Trend) Data Storage 3A-22
3A.2.1.9.2 Long-Term (Historian) Data Storage 3A-22
3A.2.1.10 System Equipment 3A-23
3A.2.1.10.1 Communications Networks 3A-24
3A.2.1.10.2 Control Processors 3A-25
3A.2.1.10.3 System Input and Output Equipment 3A-26
3A.2.1.10.4 Operator Work Stations 3A-30
3A.2.1.10.5 Engineer/Operator Work Stations 3A-31
3A.2.1.10.6 Supervisory Work Stations 3A-32
3A.2.1.10.7 Printers 3A-32
3A.2.1.10.8 Operator Control Console 3A-32
3A.2.1.10.9 System Cabinets 3A-33
3A.2.1.10.10 System Remote Interfaces 3A-35
3A.2.1.10.11 Time Synchronization Equipment 3A-36
3A.2.1.10.12 Interconnecting Cables 3A-36
3A.2.1.10.13 Installation and Maintenance Equipment 3A-36
3A.2.1.11 System Power and Grounding 3A-37
3A.2.1.11.1 Power Sources for System Use 3A-37
3A.2.1.11.2 Power Distribution 3A-38
3A.2.1.11.3 System Power Supplies 3A-38
3A.2.1.11.4 Battery Backup 3A-39
3A.2.1.11.5 System Effects on Power Sources 3A-39
3A.2.1.11.6 System Grounding 3A-39
3A.2.1.12 Software 3A-40
3A.2.1.12.1 System Operating Software 3A-40
3A.2.1.12.2 Application Builder Tools 3A-42
3A.2.1.12.3 Applications Software 3A-45
3A.2.1.12.4 Diagnostic Programs 3A-47
3A.2.1.13 DCS Specific Documentation 3A-48
3A.2.1.13.1 Program Storage 3A-48
3A.2.1.13.2 Hardware Maintenance 3A-48
3A.2.1.13.3 Programming Reference 3A-48
3A.2.1.13.4 System Troubleshooting Guide 3A-48
3A.2.1.13.5 Control Program Documentation 3A-49
3A.2.1.14 System Testing 3A-49
3A.2.1.14.1 Factory Testing 3A-49
3A.2.1.14.2 Performance Testing 3A-50

3A.2.1.15 Packaging For Shipment	3A-50
Section 3A.2.1.A - DISTRIBUTED CONTROL SYSTEM - TECHNICAL SPECIFICATION DATA SHEETS	3A-51 thru 3A-74
Section 3A.2.2 – TURBINE CONTROL SYSTEM - TECHNICAL SPECIFICATION	4 Pages
3A.2.2.1 Description of Existing Turbine Equipment	3A-75
3A.2.2.2 Turbine Control System Requirements	3A-75
3A.2.2.2.1 Main Steam Turbine Control System Control Functions	3A-75
3A.2.2.2.2 Main Steam Turbine Control System Interface Functions	3A-77
3A.2.2.2.3 Main Steam Turbine Control System Interface Functions	3A-77
Section 3B - JUNCTION BOXES	3 Pages
3B.1 General	3B-1
3B.2 Construction	3B-1
3B.3 Installation	3B-2
3B.4 Junction Box and Pull Box Identification	3B-2
3B.5 Supplemental Requirements	3B-3
Section 3C - RACEWAY	14 Pages
3C.1 General	3C-1
3C.2 Codes and Standards	3C-1
3C.3 General Installation Requirements	3C-1
3C.4 Electrical Conduit System	3C-5
3C.5 Electrical Cable Tray System	3C-9
3C.6 Boxes and Cabinets	3C-12
3C.7 Wireway	3C-14
3C.8 Supplemental Requirements	3C-14
Section 3D – CONDUCTORS AND TERMINATIONS	20 Pages
3D.1 General	3D-1
3D.2 Cable Specifications	3D-1
3D.3 Conductor and Termination Accessories	3D-1
3D.4 Installation	3D-4
3D.5 Cable Reels	3D-11
3D.6 Circuit Installation Records	3D-11
3D.7 Supplemental Requirements	3D-11
Cable Specification Summary Sheet	3D-12
Cable Specification Sheets	3D-13 thru 3D-20

Section 3E – GROUNDING 3 Pages

3E.1 General 3E-1
3E.2 Materials 3E-1
3E.3 Installation 3E-1
3E.4 Supplemental Requirements 3E-3

Section 4A - SCOPE OF ON-SITE WORK 2 Pages

4A.1 General 4A-1
4A.2 Scope 4A-1
4A.3 Miscellaneous Materials and Services 4A-1
4A.3.1 Purchaser-Furnished Materials and Services 4A-1
4A.3.2 Furnished by the Contractor 4A-1
4A.4 Work Under Separate Contracts 4A-2
4A.5 Construction Management Requirements 4A-2

Section 4B - CONSTRUCTION SCHEDULE 2 Pages

4B.1 General 4B-1
4B.2 Construction Schedule 4B-1
4B.2.1 Milestone Dates 4B-1
4B.3 Contractor's Detailed Schedule 4B-1
4B.4 Coordination 4B-2

Section 4C - CONSTRUCTION SERVICES 8 Pages

4C.1 Construction Plant and Temporary Facilities 4C-1
4C.1.1 Scaffolding 4C-2
4C.1.2 Fall Protection 4C-2
4C.1.3 Crane Inspections 4C-2
4C.2 On-Site Operations 4C-2
4C.2.1 Cleanliness 4C-2
4C.2.2 Fire Protection 4C-3
4C.2.3 Security 4C-4
4C.2.4 Construction Area Limits 4C-4
4C.2.5 Protection of Work 4C-5
4C.2.6 Protection of Concrete Surfaces 4C-5
4C.2.7 Protection of Grating and Stair Treads 4C-5
4C.2.8 Protection of Electrical Raceway Cable, and Lighting Fixtures 4C-5
4C.2.9 Use of Crane and Hoisting Equipment 4C-6
4C.2.10 Use of Elevators 4C-6
4C.3 Construction Utilities 4C-6
4C.3.1 Telephone 4C-6
4C.3.2 Water 4C-6
4C.3.3 Construction Power and Lighting 4C-6
4C.3.4 Compressed Air 4C-7

4C.3.5	Sanitary Facilities	4C-7
Section 4D - RECEIVING, HANDLING, AND STORAGE		3 Pages
4D.1	General	4D-1
4D.2	Hazardous Materials	4D-1
4D.3	Receiving	4D-1
4D.4	Handling	4D-1
4D.5	Storage	4D-2
4D.5.1	Indoor Storage Facilities	4D-2
4D.5.2	Open Platforms	4D-2
4D.5.3	Coverings	4D-2
4D.5.4	Storage Methods	4D-2
Section 4E - MODIFICATIONS TO EXISTING FACILITIES		3 Pages
4E.1	General	4E-1
4E.1.1	Coordination of Modification Work	4E-1
4E.2	Disposal of Razed Items	4E-1
4E.3	Purchaser-Furnished Modifications to Existing Facilities	4E-2
4E.4	Contractor-Furnished Modifications to Existing Facilities	4E-2
4E.4.1	Revisions to Existing Cable and Raceway	4E-2
4E.4.2	Modifications to Existing Consoles, Control Panels and Cabinets	4E-2
4E.4.3	Modifications to Existing Wiring and Raceway	4E-3
4E.4.4	Fire Stop	4E-3
4E.5	Work Around Existing Equipment	4E-3
Section 4F - CHECKOUT AND COMMISSIONING		2 Pages
4F.1	General	4F-1
4F.2	Checkout Activities	4F-1
4F.3	I/O Loop Check Activities	4F-1
4F.4	Commissioning	4F-1
4F.5	Tools and Test Equipment	4F-2
A001	MISCELLANEOUS REQUIREMENTS	1 Page
A001.1	General	1
A001.2	Identification	1
A001.3	Control Power	1
A001.4	Numbering System .	1
A002	SHIPPING REQUIREMENTS	3 Pages
A002.1	Identification	1
A002.2	Preshipment Inspection	1

A002.3	Materials List	1
A002.4	Hazardous Materials	1
A002.5	Consolidated Shipments	1
A002.6	Packaging and Identification of Spare Parts	1
A002.7	Special Shipping Requirements	2
A002.8	Protection	2

Q400 GENERAL EQUIPMENT REQUIREMENTS 2 Pages

Q400.1	Nameplates and Tags	1
Q400.2	Factory Assembly	1
Q400.3	Tools	2

A - GENERAL INFORMATION

<<NOTE to Spec Developer - Sections A and B below must be compared to the Owner prepared Sections I and II that will be added to ensure that supplied information does not conflict >>

A.1 INSTRUCTIONS TO BIDDERS.

A.1.1 General. The term Distributed Control System (DCS) refers to the equipment used to implement the control and data acquisition functions of a power plant in an integrated platform. DCS systems are generally composed of the following major hardware components:

- Modularized microprocessor-based processing units that are functionally and geographically distributed, used to control the process through the use of control configurations and graphics. This distribution is typically based on divisions between the control subsystems described above.
- Input modules and output modules to provide the interface from the instrumentation system to the DCS for use in the control configurations and graphics.
- Operator workstations with CRT or LCD based graphics to provide the operator the platform to display conditions of the plant in graphical, numerical, and trend form, and to provide the platform to allow the operator to control the power plant through interface to the control configurations.
- Engineer workstations to allow the engineer or technician to build or modify the control configurations and graphics of the DCS, and to troubleshoot the applications when plant upsets or control system mis-operations occur.

A.1.2 Definitions. Terms used in these Instructions to Bidders which are defined in the General Commercial Conditions have the meanings assigned to them in that section. Certain additional terms used in these Instructions to Bidders have the meanings indicated below which are applicable to both the singular and plural thereof

Purchaser - Owner or Client and/or Owner's representatives such as the Owner's Engineer.

Bidder - One who submits a Bid directly to Purchaser as distinct from a sub-Bidder, who submits a bid to a Bidder.

Successful Bidder - The Bidder to whom Purchaser makes an award.

A.1.3 Copies of Bidding Documents. Bidders will be loaned without charge two copies of the specifications and documents and one copy of the separately bound Bid Form and Bid Data form. Complete sets of bidding documents must be used in preparing Bids; Purchaser assumes no responsibility for errors or misinterpretations resulting from the use of incomplete sets of bidding documents. The Purchaser in making copies of bidding documents available on the above terms do so only for the purpose of obtaining Bids for the Work and do not confer a license or grant for any other use.

A.1.4 Examination of Contract Documents. It is the responsibility of each Bidder before submitting a Bid:

- To examine thoroughly the Contract Documents and other related data identified in the bidding documents (including "technical data" referred to below).
- To consider federal, state, and local Laws and Regulations that may affect cost, progress and performance.
- To study and carefully correlate Bidder's knowledge and observations with the Contract Documents and such other related data
- To promptly notify Purchaser of all conflicts, errors, ambiguities, or discrepancies which Bidder has discovered in or between the Contract Documents and such other related documents.

A.1.5 Submission of Bid. The submission of a Bid will constitute an incontrovertible representation by Bidder that Bidder has complied with every requirement of this Article, that without exception the Bid is premised upon performing and furnishing the Work required by the Contract Documents and applying the specific means, methods, techniques, sequences, or procedures of construction (if any) that may be shown or indicated or expressly required by the Contract Documents, that Bidder has given Purchaser written notice of all conflicts, errors, ambiguities, and discrepancies that Bidder has discovered in the Contract Documents and the written resolution thereof by Purchaser is acceptable to Bidder, and that the Contract Documents are generally sufficient to indicate and convey understanding of all terms and conditions for performing and furnishing the Work.

A.1.6 Interpretations and Addenda. All questions about the meaning or intent of the bidding documents are to be directed to Purchaser. Interpretations or clarifications considered necessary by Purchaser in response to such questions will be issued by Addenda mailed or delivered to all parties recorded by Purchaser as having received the bidding documents. Questions received less than 5 days prior to the date for opening of Bids may not be answered. Only questions answered by formal written Addenda will be binding. Oral and other interpretations or clarifications will be without legal effect.

Questions not resolved by Addenda shall be listed in the variations and exceptions space on the Bid Form together with statements of the basis of Bid for each question.

Addenda may also be issued to modify the bidding documents.

A.1.7 Preparation and Submission of Bids. Bids which are not prepared and submitted in accordance with the following instructions will imply that Bidder does not intend to comply with all of the contract conditions and such Bids will be considered irregular.

If the prospective Bidder declines to bid, he shall return all copies of the documents and give written notice to Purchaser not later than the date Bids are due.

A.1.7.1 Preparation. Bids shall be carefully prepared using the separate Bid Form and Bid Data form issued with the bidding document package. Return of the complete bound copy of the specifications and documents will not be required.

Entries on the Bid Form and Bid Data forms shall be typed, using dark black ribbon, or legibly written in black ink. All prices shall be stated in words and figures except where the forms provide for figures only.

Bidder shall acknowledge receipt of all Addenda issued in the space provided in the Bid Form.

A.1.7.2 Exceptions. Exceptions taken in the Bid to specification requirements must be viewed very seriously. A Bidder who takes exception risks having his Bid rejected as nonresponsive. If the Bid is not rejected outright, exceptions must generally be withdrawn by the Bidder or waived by the Purchaser. The Purchaser will not waive an exception that might affect relative pricing, since it would not be fair to waive an exception for one Bidder that other Bidders had complied with at their cost.

Bidder shall list in the space provided on the Bid Form all exceptions, clarifications, or conflicts between his Bid and the Contract Documents. If Bidder takes no exceptions, he shall write "None" in the space provided. Bids which do not comply with this requirement will be considered irregular and may be rejected at the discretion of the Purchaser. In case of conflicts not stated as directed, the requirements of the Contract Documents shall govern.

Exceptions shall be specific in nature and carefully referenced to the applicable page number, article number, and article title in the Contract Documents. If Bidder proposes substitution by revised language, such substitution shall be presented by typing the words of the original specification and incorporating the substitute language. Proposed deletions shall be set off by brackets and the proposed substitute shall be indicated by underlining, e.g.: [delete this language] substitute this language. Exceptions which are general, make reference to Bidder's standard terms and conditions, or make reference to Bidder's descriptive information as a whole will not be acceptable. Bids which do not comply with these requirements regarding exceptions may be rejected at Purchaser's discretion.

If Bid includes express or implied exceptions not listed as required, the requirements of the Contract Documents shall govern. Bidder shall not alter the bidding documents in any way, except by stating his exceptions as specified above.

A.1.7.3 Signatures. Bidder's name stated on the Bid Form shall be the exact legal name of the firm. Bidder shall sign the Bid Form with an authorized signature and the names of all persons signing or attesting shall also be typed or printed below the signature.

A.1.7.4 Correspondence and Bid Submittal. All correspondence, documents, and the bid submittal from the Contractor to ELCEN during the proposal process shall be addressed to:

Original and {{ Enter Copy Qty }} copy{{ s }} to:
{{ Enter Purchaser's Recipient Address 1 }}

Attention: {{ Enter Purchaser's Recipient Name 1 }}

{{ Enter Copy Qty }} copy{{ s }} to:

{{ Enter Purchaser's Recipient Address 2 }}

Attention: {{ Enter Purchaser's Recipient Name 2 }}

<< Repeat Above For All Purchaser's Recipients >>

Bids shall be submitted not later than {{ Enter Bid Due Date }}.

A.1.7.5 Multiple Bids. A single proprietary interest shall not submit multiple Bids for the same work even though the individual Bids are submitted under different names. Purchaser reserves the right to reject all Bids so submitted.

A.1.8 Modification and Withdrawal of Bids. Bids may be modified or withdrawn by an appropriate document duly executed (in the manner that a Bid must be executed) and delivered to the place where Bids are to be submitted at any time prior to the time set for Bid Receipt.

A.2 RIGHT TO REJECT. Purchaser reserves the right to reject any or all Bids, including without limitation the rights to reject any or all nonconforming, nonresponsive, unbalanced or conditional Bids and to reject the Bid of any Bidder if Purchaser believes that it would not be in the best interest of the Project to make an award to that Bidder, whether because the Bid is not responsive or the Bidder is unqualified or of doubtful financial ability or fails to meet any other pertinent standard or criteria established by Purchaser. Purchaser also reserves the right to waive all informalities not involving price, time or changes in the Work and to negotiate contract terms with the successful Bidder.

A.3 VALIDITY. Bidder's proposal shall remain valid for a period of _____ (__) days commencing on the proposal date.

A.4 PROJECT PROCEDURES. The Contractor shall comply with the following procedures for the duration of the Project.

A.4.1 Project Team. The Contractor shall have a dedicated Project Manager responsible for the coordination of all project related activities. The Project Manager identified for this project by the Contractor shall remain in that position throughout the project. Any changes in this key position shall be with the approval of ELCEN.

The Contractor shall include resumes of personnel who would be assigned to the project, project team organization, job descriptions, project experience, and other information that is considered pertinent.

ELCEN reserves the right to request personnel changes if performance/experience becomes an issue.

A.4.2 Scope Change Document . For any modified scope changes to the Contractor's work, the Contractor will provide written notification per the contract procedure. ELCEN reserves

the right to have any extra work performed on a firm price, not-to-exceed or cost-plus basis. The Contractor will submit with his proposal a complete rate structure applicable to any work to be performed under this agreement.

The Scope Change Document shall describe the reason for change, the person who requested the change, the original scope and man-hour cost, and the new scope and man-hour cost.

Each Scope Change Document shall be consecutively numbered. Any effects on the engineering schedule and overall project schedule shall be described. **WRITTEN APPROVAL FROM ELCEN IS REQUIRED BEFORE PROCEEDING WITH THE SCOPE CHANGE.**

A.4.3 Invoicing. The Contractor's proposal is to include a description of their invoicing procedures. ELCEN will issue a purchase order to the selected Contractor. Invoices not complete in reference or lacking in backup information will be rejected.

Progress and/or milestone based payments will be made as follows:

Project and Engineering Schedule Issued to ELCEN	15%
Factory Acceptance Test Completed	35%
Installation and Startup Complete (Final Payment)	35%
Retainage	15%

<<NOTE to Spec Developer - The above payment terms highlighted yellow with red text (sample) is sample data that MUST be corrected for the payment terms for this project >>

Final payment will be made upon completion and acceptance of the work. Retainage will be paid after all submittals have been received and accepted following final payment.

A.4.4 Warranty. The Contractor shall provide a warranty on all the hardware, software and services rendered to ensure that the Distributed Control System meets the following requirements:

- Be free from defects in design, material, workmanship and title;
- Be of the kind, quality and capability designated or described in the Contract;
- Perform in the manner set forth in or required by the Contract; and
- Has been produced processed, delivered and sold or licensed in conformity with all applicable laws, administrative regulations and orders. The Contractor shall execute, certify and deliver to ELCEN any documents as may be required to effect or evidence compliance with such laws.

Except for consumable items, the warranty period shall be _____.

During the warranty period, the Contractor shall provide free of charge telephone support for ELCEN users and remote support for any Distributed Control System imperfections.

A.4.5 Performance Guarantee. The performance guarantee shall be in the form of a bank letter of credit for 10% of the contract value, valid until receipt and approval of the Acceptance Documentation; or by retention of 10% of the amount of each invoice, retention

to be paid upon receipt and approval of the Acceptance Documentation. If in the form of a bank letter of credit, the performance guarantee should be issued by a bank in Romania, or by a bank abroad with a correspondent in Romania.

A.4.6 Acceptance Documentation. The Contractor shall provide to the Purchaser the Acceptance Documentation (at the end of executions works, at the end of commissioning, at the end of the guarantee period) in accordance with the Romanian legislation in force.

A.4.7 Insurance. The Contractor shall provide full insurance of all software, hardware, etc, against losses or damages during execution, transportation, storage, testing, and commissioning.

B - BID DATA

B.1 GENERAL. Bidder shall submit information on his offering in sufficient detail to permit a complete analysis of the Bid, including such additional information as may be requested by Purchaser.

The data listed therein shall not relieve Bidder of responsibility for meeting the requirements of the Contract Documents, except as Bidder has specifically taken exception thereto on the Bid Form.

B.2 INFORMATION TO BE SUBMITTED WITH BID.

B.2.1 Equipment and Materials. Supplementing the data included herein, Bidder shall submit specifications, preliminary drawings, and similar descriptive information as necessary to describe the equipment and materials proposed.

If alternate equipment or materials are proposed and indicated in the Bid, Purchaser will have the option of selecting any alternates so indicated and such selection shall not be a cause for extra compensation or extension of time unless so stated in the Bid. Submit complete information for each alternate.

B.2.2 Supplementary Information.

B.2.2.1 General. Preliminary Engineering/Production/Shipping Schedule. This schedule shall be based on the milestone dates listed in the preliminary project schedule at the end of Section 1.1, and shall include the dates for database, hardware, and software cutoff, for Contractor issue of each logic system configuration package for review, and for Contractor issue of the graphic configuration package for review.

Experience Information. This information shall include experience on control system upgrade projects of units of similar size, fuel source and vintage.

B.2.2.2 Distributed Control and Information System. General literature on equipment (cabinets, work stations, printers, etc.) sizes, weights, and quantities.

Provide a system configuration drawing. The system configuration drawing shall include details on both the control network and the operator work station network. The drawing, and/or attachments to the drawing shall contain the following project specific information:

- Total quantity of cabinets and breakdown by Contractor assembled cabinet bays. The breakdown shall include:
  - Quantity of cabinets in bay.
  - Overall dimensions of bay (LxWxH).
  - Estimated weight of bay.

- Total quantity of I/O modules and breakdown by cabinet and module type. The breakdown shall include:
- Quantity of each type of module in each cabinet.
- Information on the electrical signal range of the card (i.e. digital 120 VAC, 4-20 mADC, thermocouple).
- Quantity of points available on the module.
- Total quantity of each type of control and information processor and breakdown by cabinet.
- Total quantity of foreign device interfaces and breakdown by cabinet and type. The breakdown for each foreign device interface shall include:
  - Foreign device interface type.
  - Function.
  - Number of channels.
- Total quantity of operator work stations.
- Total quantity of engineering work stations.
- Total quantity of printers and breakdown by location. The breakdown for each printer include:
  - Printer type.
  - Manufacturer.
  - Model number.
- A brief description of the long-term buffer storage medium. This description shall include:
  - Medium type.
  - Capacity (Mbytes).
- A brief description of the long-term data storage medium. This description shall include:
  - Medium type.
  - Manufacturer.
  - Model number.
  - Capacity (Mbytes).
- A brief description of the short-term buffer storage medium. This description shall include:
  - Medium type.
  - Capacity (Mbytes).
- Total estimated system power consumption, and breakdown by cabinet or piece of equipment including:
  - Voltage.
  - VA Inrush.
  - VA Continuous.

- A description of the remote access web server. This information shall include:
- Contractor furnished web server equipment and software bill of material.
- Web server system architecture, including drawing showing connection to the company LAN/WAN.
- Web server security information.
- Specific information detailing the method of remote access client graphic development (i.e. fully developed via fully automated direct graphic transfer program, partially developed via automated direct graphic transfer program, manual development).
- Connection restrictions based on licenses, (i.e. one license per concurrent connection, one license per remote access client PC, no license restrictions), and the cost of each additional license.
- Software required on the remote access client PC (proprietary and non-proprietary).
- Availability of point detail information (value, alarm limits, alarm status, etc), system status (processes and I/O module status, console status, etc), and historical data, at the remote access client PC.
- Typical update time of all information on the remote access client PC.
- A brief description of the control and information processors. This description for each type of processor shall include:
  - Processor model number.
  - CPU type/model number.
  - CPU manufacturer.
  - CPU speed.
  - Memory type(s), quantity, and function(s)
- A brief description of the operator work stations. This description for each operator work station shall include:
- Display CPU type/model number.
- Display CPU manufacturer.
- Display CPU model number.
- Display CPU operating system.
- Maximum number of addressable tags per station.
- The maximum number of characters allowed for the unique identifying code (tagname), and functional description.
- Maximum and proposed number of monitors supported by one interface package (keyboard, mouse, etc.).
- Maximum and proposed number of windows supported by one display processor.
- Maximum and proposed number of monitors supported by one display processor (if only one window is open per monitor).
- Available and proposed location of the station electronic hardware (i.e. local at the interface package, remote in system cabinets).
- Location of display programs (i.e. resident in the display processor's memory (RAM or hard drive), server based).

- A brief description of the engineering work stations. This description for each engineering work station shall include:
- CPU type/model number.
- Memory type(s) and quantity.
- Disk drive type(s) and size(s).
- A brief description of the communications network(s). This description for each type of network shall include:
  - Type of network (broadcast, token passing, etc).
  - Protocol.
  - Transmission rate.
  - Maximum node to node and maximum overall length.
  - Maximum and proposed number of nodes.

Provide a description of the unit front end control strategy. The unit front end control strategy is an important aspect of the new control system. It must allow the units to operate in a highly competitive de-regulated energy market where unit cycling capability, response time, and ramp rate are important requirements. Provide information in written and/or a block diagram form that describes the proposed front end control strategy, including AGC control, runbacks, rundowns, system holds, rate limits, and modes of operation such as coordinated control and sliding pressure.

Provide a list of all training courses included in the Bid. Also provide a detailed description and the per person cost of all factory and on-site training courses available.

Provide a list and description of the software in the bid (graphics configurator, alarm manager, etc). Also provide a list, description, and cost of software available for purchase but not included (advanced graphics package, advances alarm managers, etc).

Provide a site planning manual.

Provide detailed grounding and shielding requirements.

Provide I/O module wiring and termination arrangement drawings for each type of module.

Describe SOE system limitations that would require SOE input signals to be wired to specific locations (i.e. all to one processor, or not to remote I/O), or that would prevent all SOE points from being synchronized to within 1 ms.

Provide requirements for relay buffering of digital outputs and restrictions for simultaneous loading of outputs on a single output module.

Section 1A - GENERAL DESCRIPTION AND SCOPE OF THE WORK

1A.1 THE PROJECT. The term Distributed Control System (DCS) refers to the equipment used to implement the control and data acquisition functions of a power plant in an integrated platform. DCS systems are generally composed of the following major hardware components:

- Modularized microprocessor-based processing units that are functionally and geographically distributed, used to control the process through the use of control configurations and graphics. This distribution is typically based on divisions between the control subsystems described above.
- Input modules and output modules to provide the interface from the instrumentation system to the DCS for use in the control configurations and graphics.
- Operator workstations with CRT or LCD based graphics to provide the operator the platform to display conditions of the plant in graphical, numerical, and trend form, and to provide the platform to allow the operator to control the power plant through interface to the control configurations.
- Engineer workstations to allow the engineer or technician to build or modify the control configurations and graphics of the DCS, and to troubleshoot the applications when plant upsets or control system mis-operations occur.

This project consists of a control system replacement to the {{ Enter Generating Station Name and Unit Number }} generating station. The project provides for the replacement of the originally installed dedicated control system and its hardware based control components. These systems will be replaced with the installation of a new Distributed Control System (DCS), its software based control components, and the required interface equipment with the existing facility.

The project site is located {{ Enter General Location of Generating Station }}.

<< Enter description of plant including unit size and commercial date, boiler and turbine type, major control systems (CCS, DCS, TCS, BOP) manufacturers, models, and replacement dates if portions previously upgraded, burner control system major equipment quantities and balance-of-plant motor control system major equipment quantities. >>

The project will include engineering, procuring, installing, testing, and commissioning a complete replacement control system as defined herein.

1A.1.1 Project Design Rules and Guidelines. The following rules and guidelines have been established by the Purchaser and are expected to impact all portions of the Project. The Contractor shall comply with all rules and guidelines in this section with no exceptions:

Contractor must guarantee a minimum 10 year life cycle, from completion of the project, for proposed control system product line.

After installation, each individual input and output signal must be electrically tested by injecting the proper signal into the wiring and verifying correct operation through the operator workstation displays.

The Contractor shall provide wiring drawings that indicate all new and relocated terminations, including power, grounding, communications, and I/O wiring terminations. Wiring lists may be used for construction, but are not allowed as the final deliverable to the Purchaser.

After installation, each individual input and output signal must be electrically tested by injecting the proper signal into the wiring and verifying correct operation through the operator workstation displays. Where existing field wiring terminations in the control equipment room or remote locations are left undisturbed, the Contractor can test control loops from the last affected terminal point into the DCS. To further illustrate this, if existing field cable terminations are not relocated, but instead extension cables are installed from these terminals to the DCS cabinets, the Contractor can check from these terminals to the DCS, avoiding loops checks from the field devices.

No open spaces shall be left between two existing cabinets or between a new and an existing cabinet, unless the space is one meter wide, minimum, and can be used as a walkway. Fillers shall be used between cabinets as necessary. The filler color shall match adjacent cabinets.

All empty cabinets on the ends of cabinet groupings must be removed, have all floor penetrations filled, and have the affected floor areas re-tiled to match adjacent tiling. Empty cabinets in the centers of cabinet groupings can be left in place. Cabinets that are not re-used or removed shall have all internal components and wiring removed (cabinets shall be "gutted.").

New cabinet colors must match the adjacent cabinet colors, unless the new cabinets are a standalone section. If the new cabinets are a standalone section, the color shall be acceptable to Purchaser.

1A.2 <u>WORK INCLUDED UNDER THESE SPECIFICATIONS</u>. The work under these specifications shall include engineering, procuring, installing, testing, and commissioning a complete, modern, distributed control system to replace the existing control system. Contractor shall be solely responsible for the means, methods, techniques, sequences, and procedures of construction.

Contractor shall be responsible for the following Principal Items of Work:

- Miscellaneous materials and services - Section 1A.3.
- Submittal of and adherence to project schedules - Section 1C.1.
- Design and provide drawings and documentation for the construction package for installation of the control system replacement equipment - Section 2A.
- Material procurement and equipment fabrication, including but not limited to the following major items - Section 3:

- Design, furnish and program distributed control system equipment and software - Section 3A.2
- Design and furnish junction boxes – Section 3B.
- Design and furnish a complete raceway system - Section 3C.
- Design and furnish electrical conductors - Section 3D.
- Design and furnish suitable grounding facilities for all equipment and materials - Section 3E.
- Construction services - Section 4:
- Install distributed control system equipment, control consoles, junctions boxes, and raceway system, and install and terminate electrical conductors and grounding facilities - Section 4A.
- Submittal of and adherence to construction schedules - Section 4B.
- Compliance with on-site construction services requirements - Section 4C.
- Onsite receiving, handling, and storing all equipment - Section 4D.
- Modify existing facilities - Section 4E.
- Distributed control and information system checkout and commissioning - Section 4F.

1A.3 MISCELLANEOUS MATERIALS AND SERVICES. Contractor shall furnish miscellaneous materials and services in connection with the Work as follows.

1A.3.1 Components and Connections. Furnish the following components and connections:

All signal conversion equipment necessary to interface existing equipment with equipment furnished with the Work, except as otherwise specified.

All nuts, bolts, gaskets, special fasteners, backing rings, etc., between components and equipment furnished with the Work.

All special tools or lifting beams and lugs for offloading.

The use of all special tools required for erection of the equipment, exclusive of maintenance tools. Erection tools shall remain the property of Contractor and all shipping costs to and from the Project Site shall be at Contractor's expense.

1A.3.2 Technical Services. Furnish technical services as described herein for installation, commissioning, and field certification, and tuning.

1A.3.2.1 Field Technical Services Included in Bid as Required by Contractor. The Contractor's bid shall include furnishing all of the Technical Services Representative services required to install, commission and checkout the DCS equipment including, but not limited to the services listed in the table below.

- Providing technical direction for unloading from transport, hauling, storing, and cleaning.
- Inspecting and testing of the equipment after installation and directing any changes or adjustments required to assure proper operation.
- Providing services required as a condition to provide the warranties and guarantees specified.

- Directing the correction of any design or manufacturing errors.
- Ensuring final versions of software are installed on the system.
- Providing a written status report to the Purchaser, at a minimum, on a weekly basis.

During the outage, the DCS schedule is critical. The field technical services representative shall take all actions necessary to promptly correct problems, including the hiring of labor necessary to correct such problems, if required. All of the Contractor's costs associated with the discovery, investigation, and correction of problems within the Contractor's scope of work shall be the responsibility of the Contractor, and will not be chargeable against the Purchaser's services man-hour or round trip travel banks described below.

1A.3.2.2 Field Technical Services Bank Quantities For Purchaser Use. The Contractor's bid shall include the quantities of hours and trips for the tasks described below. These quantities are to be used at the discretion of the Purchaser and are above and beyond the field technical services furnished by the Contractor to meet the engineer, procure, construct scope.

Representative Support	Days of Service	Round Trips
DCS Tuning and Start-Up Support	300	10

The field service representative shall work non-routine working hours as required to support the plant start-up / operation and accomplish the above tasks. If at any time the Purchaser deems that a field technical services representative does not meet the requirements of the assignment, upon notice by the Purchaser, the Contractor shall replace the representative with a suitable replacement immediately.

Costs for the days of service specified in the bank above shall include all salary and overhead, local lodging, travel between the plant site and local lodging, meals, and miscellaneous expenses.

Charges against this man-hour bank shall be as follows on a per representative basis (no night shift differential will be charged). One (1) day of service shall be equal to eight (8) hours charged.

Weekdays	First 8 hours that day @ 1 hour worked = 1 hour charged Additional hours that day @ 1 hour worked = 1.5 hours charged
Weekends & Holidays	All hours that day @ 1 hour worked = 1.5 hours charged

Costs for the round trip travel specified in the bank above shall include all costs associated with travel to and from the plant site, such as salary and overhead, transportation, meals, lodging, and incidental costs.

These trips will be scheduled solely by the Purchaser to include trips for representative's initial travel to the plant site, departure from the plant site subsequent to release from service, and to coincide with schedule periods where representatives are not required at the plant site. Any other travel required during the period of plant site service not requested by the

Purchaser shall be to the Contractor's account, and will not be charged against the travel bank.

The furnished man-hour and round trip bank quantities shall extend and remain valid throughout the warranty period.

If the number of days of service and/or the number of round trips actually required are more or less than the specified quantities, the contract amount will be increased or decreased in accordance with the adjustment prices included with the bid.

1A.3.2.2.2 DCS Commissioning and Tuning Support. The Contractor's representative(s) supporting this task shall be technically competent; factory trained; experienced in the installation and operation of the equipment; authorized by the Contractor to perform required modifications; experienced in the control system tuning procedures, DCS tuning parameters, and control logic and graphic display modifications with a minimum of 10 years experience in this type of work; and must have on-site experience in configuration and tuning of power generation units of the type on this Project.

The representative(s) shall be responsible for tuning all control loops implemented in the DCS to optimize the efficiency and operation of the Purchaser's equipment and plant, as scheduled and directed by the Purchaser.

1A.3.2.3 Personnel Training. The Contractor shall furnish training for Purchaser personnel in system software and hardware. Training shall consist of attending formal classes, customized lectures, and on-the-job training. Training shall consist of a combination of training at the Contractor's training center and at the Purchaser's site. The Contractor shall provide all materials, hardware, and software necessary to instruct the Purchaser's personnel in the use, operation, and maintenance of the system. The Contractor will not have access to the DCS equipment at the Purchaser's site, at the time of training. It is the intention of this specification that the Contractor provide temporary operator workstations, processors, and I/O card hardware and software to allow proper hands-on training at the Purchaser's site. The following training requirements are requested as a minimum and shall be included as part of the Contract price. Additional recommended training shall also be identified, but listed separately with course costs.

Plant control Technicians shall receive hardware maintenance training on all system hardware such as Control and Operator Interface Processor equipment, I/O equipment, and data storage equipment that will permit them to use the system diagnostics to locate and repair equipment defects. Plant control Technicians training for two Technicians at the Contractor's training center shall be a minimum eight-week course.

Plant Engineers/Programmers shall receive training to allow configuration of all system applications software such as control and data acquisition configurations, control and information displays and reports, and training to allow setup or reconfiguration of all system equipment such as Control and Operator Interface Processor equipment, and data storage equipment. Plant Engineer/Programmers training for three Engineers at the Contractor's training center shall be a minimum eight-week course.

The above training for technicians and engineers is listed as a minimum. The DCS vendor shall provide a recommended list of training courses, including costs, required to allow the Purchaser to be proficient on their system.

Plant Operators shall receive training in the use of the Operator Work Station hardware, control and information display software, and system configurations that will permit them to perform all of the required Operator Interface Functions of the plant. Plant Operator training for three plant operators at the Contractor's training center shall be a minimum four-week course.

The above training for plant operators is listed as a minimum. The DCS vendor shall provide a recommended list of training courses, including costs, required to allow the Purchaser to be proficient in graphic development on their system.

The above listed training shall be scheduled by the Purchaser, based on the Contractor's training class schedule, and may be done at anytime during the course of the project.

In addition to the training at the Contractor's training facility, the Contractor shall also furnish training at the Purchaser's site for the following durations and quantity of trainees:

Single Course Duration	Qty of Courses	Qty of Participants Per Course	Qty of Participants Trained	Round Trips	Training Duration
Technician Basic Course:					
5 days	3	7 Technicians	21 Technicians	1	15 days
Technician Advanced Course:					
5 days	3	7 Technicians	21 Technicians	1	15 days
Operator Course:					
5 days	4	6 Operators	23 Operators	1	20 days

Contractor's costs for the days of service specified in the on-site training table above shall include all salary and overhead, local lodging, travel between the plant site and local lodging, meals, and miscellaneous expenses.

Contractor's costs for the round trip travel specified in the on-site training table above shall include all costs associated with travel to and from the plant site, such as salary and overhead, transportation, meals, lodging, and incidental costs.

If the number of days of training and/or the number of round trips actually required are more or less than the specified quantities, the contract amount will be increased or decreased in accordance with the unit adjustment prices. For contract adjustment, a day of service shall be defined as a normal 8 hour working day; the number of days for which the adjustment will be made will be determined by dividing by eight the number of hours spent at the jobsite by each training representative. For contract adjustment, additional round trip travel charges shall only be incurred by the Purchaser for travel requested by the Purchaser that is in excess of the initial travel to the jobsite and subsequent departure from the jobsite upon release for

each of the two types of training. Any travel required during the period of jobsite service shall be to the Contractor's account.

1A.3.3 Planning Conferences. The Contractor's bid shall include furnishing the services of qualified personnel to attend, at a minimum, the following design conferences and meetings as scheduled by the Purchaser to discuss performance of the Work.

- Project kickoff meeting
- Design Review Conference

1A.3.4 Factory Acceptance Testing. The Contractor shall provide equipment and configuration factory acceptance testing as follows and as further detailed in Section 3A.2.1.14.1.

Equipment/Configuration Tested	Minimum Duration	Test Start Date
Hardware/Software	4 Weeks	{{ Enter Date }}

It is the Contractor's responsibility to provide all hardware required to perform the factory acceptance tests. If equipment needed to perform any portion of a factory acceptance test is required to be shipped prior to a test, the Contractor shall provide, at the Contractor's cost, all necessary temporary equipment to fulfill the requirements of the factory acceptance test.

1A.3.5 Recommended Spare Parts. The Contractor shall furnish all recommended spare parts. Ten percent (10%) spare parts shall be provided for all control system hardware components. Spare parts shall be delivered on a per Phase basis with the equipment provided for each Phase. In all cases, a cumulative total across all Phases of the project of no less than two (2) and no more than ten (10) spare components shall be provided.

1A.4 WORK NOT INCLUDED UNDER THESE SPECIFICATIONS. The following items of work where required will be furnished and installed under separate contract.

- Procurement of field instrumentation (transmitters) including replacement of existing transmitters, and addition of new transmitters.
- Installation of field instrumentation including installation of new cable for new field instrumentation, impulse piping, isolating valves, and manifolds.
- Procurement of actuators (control valves, solenoid valves, motors, etc).
- Installation of actuators including installation of new cable for new actuators.
- Main inverter power supply equipment.
- HVAC

1A.5 LANGUAGE, NUMBERS, AND SYMBOLS. All documents of the offer, before signing the contract, shall be in English. After contract signing, all drawings, designs, specifications, manuals, operating instructions, statements, schedules, notices, documents, nameplates, and markings shall be in both the English and Romanian languages. All graphics developed by the Contractor shall be in the Romanian language. Windows operating system graphics may be supplied in English if a Romanian version is not available.

All units of measurement shall be stated in the SI - system. The Contractor shall further be required to employ in all drawings and submittals the same symbols and designations as are used by the Purchaser.

Section 1B – DESIGN DATA AND DRAWINGS

1B.1 GENERAL. This section stipulates the requirements for engineering data and drawings which the Contractor shall submit for design information and review.

1B.2 CORRESPONDENCE. Correspondence on all technical matters shall be addressed to the Purchaser as follows:

Name
Address

Attention: CONTACT NAME

Correspondence on all procedural and commercial matters shall be addressed to the Purchaser as follows:

Name
Address

Attention: CONTACT NAME

Letters of transmittal shall accompany submittals of drawings and engineering data and shall include a list of the data included in the transmittal. Correspondence shall be identified with the project name, plant name and B&V project number. Transmittal of drawings and data shall be as specified in the article entitled DRAWINGS.

1B.3 REVIEW OF ENGINEERING DATA. The Purchaser's review of engineering data will cover only general conformity of the data to the specifications and documents, external connections and interfaces with existing equipment. This review does not indicate a thorough review of all dimensions, quantities, and details of the equipment, material, device, or item indicated or the accuracy of the information submitted. This review shall not be construed as relieving the Contractor from any responsibility for errors or deviations from the requirements of the contract documents.

1B.4 DESIGN DATA. All design data required by this specification shall be submitted as scheduled in Section 1C, unless otherwise specified.

1B.5 DRAWINGS. Wherever possible the Contractor-prepared drawings are to be based on modifications to original plant and control logic drawings. The modifications shall be in sufficient detail to indicate the arrangement, description and operation of component materials and devices; the external connections, and correlation with other equipment.

Drawings to be submitted include all "Certified" drawings by the Contractor, subcontractors, manufacturers, etc., unless specifically excluded by the Purchaser. "Certified" drawings shall mean drawings fully completed and certified by the Contractor as to the compliance of the information contained thereon with the requirements of these specifications. Certified

drawings shall be clearly stamped "Certified" or shall have title block entries clearly indicating the drawing is certified. Certified drawings will be reviewed by the Purchaser and processed as specified in this section.

1B.5.1 Drawing Submittal. ____ (__) prints of each markup drawing shall be submitted to the Purchaser as follows:

____ (__) to:

Name
Address

Attention: Contact Name

Markups reviewed by the Purchaser will be returned to the Contractor with corrections or exceptions clearly marked. The Contractor shall make the changes noted thereon and copies of the corrected drawings shall be submitted for review in the same manner as the original submittal.

When the drawings are returned to Contractor with no corrections or exceptions noted the Contractor shall submit drawings for final distribution as specified hereinafter under Final Markup Drawings.

No work shall be performed in connection with the installation of equipment, materials, computer hardware and software until the drawings and data have been reviewed by the Purchaser except at the Contractor's own risk and responsibility. Work may proceed on equipment, materials, computer hardware and software when the drawings and data therefore have been returned with no corrections or exceptions noted; or when drawings have been returned with corrections or exceptions noted, provided the work is performed in accordance with the Purchaser's notations.

If changes are made at the project site to the equipment to correct installation errors, due to design changes or wiring revisions, revised drawings indicating the changes made shall be prepared and submitted to the Purchaser.

1B.5.2 Final Markup (As-Built) Drawings/Software. After receipt from the Purchaser of drawings and software with no corrections or exceptions noted, the Contractor shall transmit ____ (__) prints/copies of the final version to the Purchaser for final distribution.

1B.6 INSTRUCTION MANUALS/DOCUMENTATION. The Contractor shall furnish instruction manual and documentation bound in a binder suitable for long term rough usage. Front covers of the manuals shall be permanently marked with lettering indicating Purchaser's name, plant name, name of equipment, and name of manufacturer.

The manuals shall include the following information specific to each component or piece of equipment supplied by the Contractor:

- Table of Contents and index tabs.
- Name, address, telephone number, and fax number of the local and national service representative and supplier and 24 hour emergency service contact.
- Specifications and test data.
- Description of the equipment.
- Instructions in the methods of receiving, inspection, storage, and handling prior to installation.
- Installation instructions.
- Configuration and modification instructions.
- Operating instructions.
- Maintenance instructions.
- Assembly drawings.
- Parts list.
- List of acceptable lubricants.
- List of recommended spare parts.
- List of maintenance tools provided with equipment.

The above listed requirements are the minimum. Additional information that is necessary for proper installation, operation and care of the equipment shall also be included.

One copy of the instruction manual shall be submitted to the Purchaser for review. After the manual has been approved, the final ____(__) copies should be sent to the Purchaser.

Section 1C - SCHEDULE

1C.1 PROJECT SCHEDULE. Contractor shall perform the Work in accordance with the Schedule of Activities herein. The Schedule of Activities is not intended to be an exhaustive listing of all elements of the Work, but rather a list of those activities essential to the success of the Project.

The time periods and dates listed in the Schedule of Activities indicate the latest dates by which the listed activities shall be completed; however, such dates shall not preclude Contractor from completing these activities earlier than the dates indicated, with the concurrence of Purchaser.

1C.1.1 Engineering Schedule. The Contractor shall submit a schedule for engineering associated with the equipment being provided. The engineering schedule shall be updated and submitted to the Purchaser on the first day of each month until completion of the engineering effort.

1C.1.2 Procurement/Production/Shipping Schedule. The Contractor shall submit a detailed procurement/production/shipping schedule for the equipment and materials not later than the date indicated; thereafter, the schedule shall be updated and submitted as directed by the Purchaser, and every 60 days minimum.

1C.1.3 Construction Schedule. The Contractor shall submit a detailed construction schedule in accordance with the requirements of Section 4B of these specifications.

1C.1.4 Schedule of Activities.

Activity	Date as Defined Below
Contract Award	{{ Enter Date }}
Certificates of Insurance	With executed Agreement
Contractor to deliver initial engineering schedule to the Purchaser	15 days after Award of Contract
Contractor to deliver initial procurement schedule to the Purchaser	15 days after Award of Contract
Contractor to deliver initial construction schedule to the Purchaser	120 days prior to the start of Construction
Contractor to deliver hazardous materials documentation to the Purchaser with material lists	5 days prior to arriving on-site
Contractor to notify Purchaser for preshipment inspection	30 days prior to each shipment

Factory test procedures and schedule	45 days prior to date of factory test(s)
Contractor to notify Purchaser of factory demonstrations	30 days prior to date of factory demonstration(s)

Milestone Schedule Requirements

Contract Award	{{ Enter Date }}
Factory Acceptance Test Hardware/Software	{{ Enter Date }}
Unit Outage Begins	{{ Enter Date }}
Unit 2 Available to begin Installation work	{{ Enter Date }}
Unit 2 Start-up Commences	{{ Enter Date }}
Unit 2 Start-up Complete with Unit at Full Load	{{ Enter Date }}
Delivery of as-built drawings as-built drawings	{{ Enter Date }}
Final Acceptance of Installation by Purchaser	After completion of corrections and delivery of final documents
Final Tuning	On-going based on plant availability

1C.1.5 Definition of Final Acceptance. The term final acceptance means that the Purchaser agrees that the scope of work for the entire control system replacement project has been completed in accordance with the contract.

Section 1D – OTHER REQUIREMENTS

1D.1 GENERAL. These requirements apply in general to all equipment and materials, and are supplementary to the technical requirements. If requirements specified herein are in conflict with the requirements specified in the technical requirements, the technical requirements shall govern to the extent of such conflict.

The Contractor's proposal shall be based upon the use of equipment and materials complying fully with the requirements specified in this Section. It is recognized that the Contractor may have standardized on the use of certain components, materials, processes, or procedures different than those specified herein. Alternates in addition to the base proposal on the basis of supplying the Contractor's standard components, materials, processes, or procedures will be considered. The alternate proposal shall clearly stipulate the alternate proposed, the specific exceptions to the specification, and the price change applicable for supplying such alternate.

1D.2 REFERENCED STANDARDS. Reference to the standards of any technical society, organization, or association, or to the laws, ordinances, or codes of governmental authorities shall mean the latest standard, code, or specification adopted, published, and effective at the date of taking bids unless specifically stated otherwise in this specification.

The specifications, codes, and standards referenced in this specification (including addenda, amendments, and errata) shall govern in all cases where references thereto are made except where they conflict with this specification. In case of conflict between the referenced specifications, codes, or standards and this specification, the latter shall govern to the extent of such difference.

All engineered equipment manufactured under this specification and the associated engineering for the manufacture shall be in accordance with the codes and standards detailed in the specification sections and the following codes and standards.

For engineered equipment manufactured under this specification and the associated engineering for that engineered equipment, reference in these specifications is made to only USA standards, codes, and specifications, and the equipment, materials, and workmanship furnished under these specifications shall be in accordance with the standards, code, or specification designated. Equivalent standards, codes and specifications of other authorities will be considered when submitted to the Purchaser or Owner's Representative in the English language. If the proposed substitute standards, codes, or specifications are acceptable to the Purchaser and the Owner's Representative, their use will be authorized in writing. In the event the substitute standards, codes, or specifications are not acceptable, the work shall proceed in accordance with USA standards, codes, and specifications designated in the specifications.

Works	In Accordance With
Surge Withstand Capability (SWC) Tests for Protective Relays and Relay Systems	ANSI C37.90.1
Power Test Code - Steam Generating Units	ASME PTC 4.1
Power Test Code - Coal Pulverizers	ASME PTC 4.2

Power Test Code - Air Heater Performance	ASME PTC 4.3
Power Test Code - HRSG Performance	ASME PTC 4.4
Power Test Code - Steam Turbine Performance	ASME PTC 6
Power Test Code - Pump Performance	ASME PTC 8.2
Power Test Code - Fan Performance	ASME PTC 11
Power Test Code - Feedwater Heater Performance	ASME PTC 12.1
Power Test Code - Condenser Performance	ASME PTC 12.2
Power Test Code - Deaerators	ASME PTC 12.3
Power Test Code - Gas Turbine Performance	ASME PTC 22
Power Test Code - Cooling Tower Performance	ASME PTC 23
Low Voltage Equipment Directive	EEC 73/23
EMC Directive	EEC 89/336
Interface Between Data Terminal Equipment and Data Circuit-Terminating Equipment Employing Serial Binary Data Interchange	EIA 232-D
Racks, Panels, and Associated Equipment	EIA RS-310-D
Electrical Characteristics of Balanced Voltage Digital Interface Circuits	EIA RS-422-A
Standard for Electrical Characteristics of Generators and Receivers for Use in Balanced Digital Multipoint Systems	EIA RS-485
Climate Class	EN 60068-2-38
Vibration Resistance	EN 60068-2-64
Protection Class of Housing (IP Code)	EN 60529
Standard Voltages	EN 60204-1 (IEC 204-1)
EMC (Electromagnetic Compatibility) Radio Interference	EN 55011
EMC (Electromagnetic Compatibility) Interference Emission / Interference Immunity	EN 61320
EMC (Electromagnetic Compatibility) Emissions Compatibility – Appendix A – Industrial Area	EN 61326
Protection Measures for Electrical Equipment for Measurements, Control, Regulation and Laboratory Procedures	EN 61010
Electrical Equipment for Furnace	EN 501561-1
Automatic Burner Control System for Gas Burners and Gas Burning Appliances With or Without Fans	EN 298
Safety of Machinery – Electrical Equipment of Machines. Part 1: General Requirements	EN 60204-1
Identification for Control Device and Components	EN 61346-1
Graphical Symbols	EN 60617 and EN 61082
Quality Systems. Model for Quality Assurance in Design / Development Production, Installation and Servicing	EN ISO 9001
Quality Systems. Model for Quality Assurance in Production, Installation and Servicing	EN ISO 9002
Quality Systems. Model for Quality Assurance in Final Inspection List	EN ISO 9003
Quality Management and Quality System Elements	EN ISO 9004
Information Technology. Telecommunications and Information Exchange Between Systems. Open Systems Interconnection. Protocol for Providing the Connection-Mode Transport Service (ISO/IEC 8073:1992 and Technical Corrigendum 1:1993)	EN 28073
Particular Safety Requirements for Equipment to be Connected to Telecommunication Networks	EN 41003

Attestation Standard for the Assessment of Contract Award Procedures of Entities Operating in the Water, Energy, Transport and Telecommunication Sectors	EN 45503
Coaxial Cables. Part 3-1: Sectional Specifications for Cables Used in Telecom Applications. Miniaturized Cables Used in Digital Communication Systems	EN 50117-3-1
General Purpose Field Communication System. Volumes 1/3, 2/3 and 3/3	EN 50170
High Efficiency Communication Subsystem for Small Data Packages	EN 50254
Multi-Element Metallic Cables Used in Analog and Digital Communication and Control. Part 1: Generic Specification	EN 50288-1
Communication Cables. Specifications for Test Methods	EN 50289-1-1
Communication Cables. Part 1-1: General	EN 50290-1-1
Industrial Communications Subsystem Based on ISO 11898 (CAN) for Controller-Device Interfaces	EN 50325-1
Connector Sets and Interconnect Components to be Used in Optical Fiber Communication Systems. Product Specifications.	EN 50377
Standard Digital Interface for Programmable Instrumentation	IEEE 488.1
Standard Codes, Formats, Protocols and Common Commands	IEEE 488.2
Guide for protection, interlocking, and control of fossil-fueled unit-connected steam stations.	IEEE 502
Guide for Installation of Electrical Equipment to Minimize Electrical Noise Inputs to Controllers from External Equipment	IEEE 518
Standards for Local and Metropolitan Area Networks	IEC 8802 (IEEE 802)
Classification of Degrees of Protection Provided by Enclosures	IEC 529
Programmable Controllers	IEC 1131 (EN 61131)
UPS	IEC 62040-3
Test on Electric Cables Under Fire Condition	IEC 332-2
Protection Against Electric Shock	IEC 364-4-41
Binary Logic Diagrams for Process Operations	ISA S5.2
Graphic Symbols for Process Displays	ISA S5.5
Environmental Conditions for Process Control Systems	ISA S71.02
Fossil Fuel Power Plant Simulators-Functional Requirements	ISA S77.20
Fossil Fuel Power Plant Boiler Combustion Controls	ISA S77.41
Fossil Fuel Power Plant Feedwater Control System - Drum-Type	ISA S77.42
Fossil Fuel Power Plant Unit/Plant Demand Development (Drum-Type)	ISA S77.43
Fossil Fuel Power Plant Steam Temperature Control System - Drum-Type	ISA S77.44
Functional Diagramming of Instrument and Control Systems	ISA (SAMA) RC22-11
Information Technology-Open System Interconnection-Basic Reference Model	ISO OSI 7498-1
Guidelines for the Application of ISO 9001 to the Development, Supply and Maintenance of Software	ISO 9000-3
Information Processing Systems. Data Communication. High-level Data Link Control Procedures. Consolidation of Classes of Procedures	ISO 7809
Enclosures for Electrical Equipment	NEMA 250
Enclosures for Industrial Controls and Systems	NEMA ICS6
National Electrical Code	NFPA 70
Cabinets and Boxes	UL 50
Industrial Control Equipment	UL 508

All materials furnished and installation procedures used under this specification shall conform with accepted good engineering practice, the codes and standards detailed in the specification sections, the requirements of the ANSI Code for Pressure Piping, the appropriate sections of the ASME Boiler and Pressure Vessel Code, applicable NEMA, UL, NEC, and IEEE standards, all federal and state laws and local regulations, and the requirements of the applicable European and Romanian standards.

1D.3 MATERIALS. Unless specifically provided otherwise in each case, all materials and equipment furnished for permanent installation in the work shall conform to applicable standard specifications and shall be new, unused, and undamaged.

1D.4 IDENTIFICATION. All shipping notices and other documents pertaining to the equipment and materials furnished under this specification shall be identified as follows:

ELCEN
ADDRESS

Attention: CONTACT NAME

1D.5 SHIPMENTS. All shipments shall be F.O.B. destination, freight allowed.

The Contractor shall discuss with the Purchaser the routing of shipments and shall route the same as indicated by the Purchaser provided freight rates are no greater than by other routes. Shipments are accepted Monday through Friday from 8:00 a.m. to 4:00 p.m.

All shipments shall be delivered to:

ELCEN
PLANT ADDRESS

Attention: CONTACT NAME

The equipment shall be shipped boxed, crated, or otherwise protected against damage during shipment, handling, and storage at the Project Site. Openings shall be closed with caps, plugs, or other suitable closure devices suitable for rough usage. Packaging shall be suitable to prevent moisture or water damage during shipment and outdoor storage at the Project Site.

1D.6 SHIPPING NOTICE. The Contractor shall submit to the Purchaser duplicate copies of shipping notices describing each shipment of material, equipment, computer hardware, or software. Climate control requirements shall be included. The shipping notices shall be mailed to arrive approximately 10 days ahead of the estimated shipment arrival. The addressee for each shipping notice will be CONTACT NAME.

The shipping forms must include the following content:

- Fiscal bill (invoice).
- Shipping notice.
- Certificate of origin.
- Factory testing certificate.
- Quality and conformity certificate.
- Guarantee certificate.
- EUR certificate.
- Transport certificate.
- Import statement value.
- Insurance policy-"for all risks".

1D.7 SHIPPING LIST. The Contractor shall prepare and submit with the first shipping notice duplicate copies of an itemized materials list covering all material, equipment, computer hardware and software furnished under this specification. The materials list shall be in sufficient detail to permit an accurate determination of the completion of shipment.

1D.8 CORRECTION OF ERRORS. Equipment and materials shall be complete in all respects within the limits herein outlined. All errors or omissions required to be corrected in the field shall be done by the Contractor or his duly authorized representative at the Contractor's expense.

1D.9 QUALITY ASSURANCE. The Contractor shall maintain a quality assurance program that provides that equipment, materials, and services under this specification whether manufactured or performed within the Contractor's plant or at any other source shall be controlled at all points necessary to assure conformance to contractual requirements. The program shall provide for the prevention and ready detection of discrepancies and for timely and positive corrective action. The Contractor shall make objective evidence of quality conformance readily available to the Purchaser. Instructions and records for quality assurance shall be controlled.

Section 2A –ENGINEERING DESIGN AND DOCUMENTATION

2A.1 GENERAL. The Contractor shall perform all necessary control system upgrade definition and construction package engineering in conformance with these specifications, and provide all necessary documentation and drawings to complete the control system replacement project. The drawings provided by the Contractor shall clearly indicate to the Purchaser the scope of installation and provide sufficient information for the Purchaser's operations and maintenance activities in the future.

The contractor shall perform procurement and construction according to the engineering activities as defined in these specifications.

The Contractor shall provide all engineering information to the Purchaser for review prior to procurement or installation.

2A.2 CONTROL SYSTEM UPGRADE ENGINEERING. The DCS procurement scope and associated engineering is specified in Section 3A. Additionally, the following detailed engineering tasks shall be performed by the Contractor and the resultant engineering design shall be incorporated into the procurement and construction activities as part of the base scope of these specifications. This list is not intended to be an exhaustive list of the Contractor's engineering requirements, only a list of engineering requirements where additional information is being supplied.

2A.2.1 Input/Output (I/O) Database. An I/O database shall be the primary means of communicating the control system signals between Purchaser and Contractor. At the conclusion of the project, Contractor shall turn over the final I/O database to Purchaser. I/O database shall be in Microsoft Access format only.

Contractor shall develop a preliminary I/O database and the beginning of the project, and issue for Purchaser review.

Contractor shall verify I/O database, including verifying signals, signal ranges, signal power sources, and deletion of I/O signals which will not be necessary. Contractor shall be responsible for completing the development of the I/O database including refining the I/O scope and adding additional information when available such as alarm, circuit, and drawing information.

2A.2.2 I/O Partitioning. Contractor shall be responsible for partitioning I/O to the DCS systems and I/O structure. The Purchaser shall have the right to review and request modification to the partitioning prior to I/O database freeze.

2A.2.3 Operator Control Console. The existing control panel shall be removed by the Contractor during the retrofit outage and replaced with a new Operator Control Console (OCC) as specified in Section 3A.2.1 and as shown on the drawings contained in Section 6.

The following table lists control panel equipment modifications required by the Contractor. This list is not intended to be an exhaustive list of all of the Contractor's control panel modification requirements.

<<NOTE to Spec Developer - The following list is here for example only, what equipment selected to be left hardwired must be review for each unit, and this list must be modified to reflect the hardwired requirements. >>

Item Description	Modification
Emergency trip pushbuttons subpanel Turbine (qty 1 pair) Boiler (qty 1 pair) Mills (qty 8 pair)	Replace with new on OCC
Emergency oil pump control switches Turbine (qty 2)	Replace with new on OCC subpanel
DCS LCD work stations in/on OCC	Install new work stations
DCS large screen work station in/on OCC	Install new work station

<<NOTE to Spec Developer - If the control system retrofit does not include machine control with fully automatic synchronization, the following items should be included in this list. If synchronization will occur only semi-manually, do not include the following items. >>

Unit Synchronization Equipment Gen Brkr Open/Close Switch (qty 1) Gen Brkr Open/Close Lights (qty 2) Synchronization Scope (qty 1) Synchronization Lights (qty 2)	Replace with new on OCC
All other existing control panel equipment	Remove and Dispose per Section 4E.2

The Contractor shall be fully responsible for designing and implementing these modifications including, but not limited to, development of schematics and wiring drawings, cable pullbacks, equipment relocation, junction boxes, extension cables, wiring design, raceway and grounding.

<<NOTE to Spec Developer - If the entire existing main control console will not be removed in this retrofit, delete the above Section 2A.2.3, and include the following in its place, and also include detailed drawings of the control panel equipment that is to be removed in Section 6. >>

2A.2.3 Operator Control Console. The existing control panel shall be modified during as shown on the drawings included in Section 6. This work includes, but is not limited to, the following items.

Removal of all equipment marked as deleted on the drawings.

Modification of existing control console to accept new LCD monitors, keyboards, and mice.

Installation of new DCS workstations as shown on the sketches contained in Attachment 6.

Add painted aluminum cover plates over control console openings as necessary. Paint to match existing control console color.

The Contractor shall be fully responsible for designing and implementing these modifications including, but not limited to, schematic and wiring drawings, cable pulltracks, equipment relocation, wiring design, raceway and grounding.

2A.2.4 General Engineering. The Contractor shall be responsible for the basic engineering documentation for control system upgrade. Where existing drawings or information is available, the Contractor is responsible for verifying its accuracy, where existing drawings or information is not available or does not exist, the Contractor shall develop the information required for the control system upgrade. This basic engineering documentation shall include, but not be limited to the following:

- P&ID
- Modulating control diagrams
- Functional diagrams
- Functional description
- Logic diagrams (binary control)
- Sequence diagrams
- Protection logic diagrams
- Power supply wiring diagrams
- I/O wiring diagrams
- Electrical equipment (consumer) list- pumps, motors, valves, etc.
- Instrument (measurement) list-pressure, temp, flow, etc.
- Plant arrangement (layout) drawing

2A.2.5 DCS Equipment And Configuration Design And Drawings. The Contractor shall design and furnish drawings that identify the hardware and configuration of the control system replacement DCS. These drawings shall include, but not be limited to, the following information:

- Identification of all DCS hardware and accessory devices, including model numbers and Purchaser tag numbers, where applicable.
- Identification of layout of input/output (I/O) and processor racks, including model numbers and Purchaser tag numbers for equipment and devices, where applicable.
- Identification of interconnections and cabling between equipment, including all terminal block, termination, cable number, and color code information.
- Identification and pinout of all prefabricated cables.

2A.3 CONTROL SYSTEM REPLACEMENT INSTALLATION.

2A.3.1 Control Room Modifications. The Contractor shall design control room modifications as shown on the conceptual sketches included in Section 6.

2A.3.2 Control Equipment Room Modification. The Contractor shall design control equipment room modifications as necessary to house all new control equipment.

The architectural appearance of the final control equipment room shall match the existing architectural appearance and shall be acceptable to the Purchaser.

2A.3.3 Design And Drawings For New Installations. The Contractor shall design and furnish all drawings required for the complete installation of the control system replacement project. This engineering design effort shall include the development of drawings to describe the scope of installation work, and drawings and documents required to support checkout, testing, and commissioning. The Contractor's design shall include, but not be limited to, the development of the following design documents:

- Circuit and raceway drawings and lists.
- Schematic wiring diagrams, including elementary diagrams, termination information and circuit numbers.
- Equipment layout drawings.
- Internal wiring diagrams.
- I/O card wiring diagrams showing internal cabinet wiring to field terminal blocks.
- Control panel layout drawings.
- Equipment mounting information and drawings.
- Equipment location drawings.
- Power supply drawings.
- Grounding system drawings.
- Lighting and communications drawings.
- DCS I/O lists.
- DCS analog and digital configuration drawings.

The format of the Contractor's design documents shall be consistent with the existing drawings, conventions and standards of the Purchaser.

2A.3.4 Design And Drawings For Interfaces With Existing Facilities. The Contractor shall design all interfaces necessary for interconnection with existing facilities required for the complete installation of the control system replacement project. This design effort shall include revision of existing plant drawings to clearly identify all modifications to existing facilities, including, but not limited to, the following:

- Equipment, control panels, cabinets, and devices, including modifications to internal wiring and replacement of equipment and devices.
- Wiring, cables, and terminations.
- Schematic wiring diagrams of existing control schemes, terminations, and I/O interface.
- Raceway, including use of existing tray, conduit, and duct bank.

- Power supplies and auxiliary power system equipment, including use of existing power supplies to power new equipment.
- Grounding.
- Lighting and communications.
- Plant arrangements.
- Buildings, including floor and wall penetrations.
- Demolition design showing equipment to be removed or modified.

The Contractor shall design and furnish demolition drawings to clearly identify the scope of modifications to existing facilities. The Contractor shall coordinate demolition drawings with design drawings to show both the modifications to existing facilities and the new installation. Demolition drawings shall include, but not be limited to, the following information:

- Removal of existing cabinets, equipment, and devices.
- Removal of existing cables, terminations, terminal blocks, and internal cabinet wiring.
- Removal of loads from existing power sources.

The format of the Contractor's design documents shall be consistent with the existing drawings, conventions and standards of the Purchaser.

2A.3.5 Revision of Existing Schematic Wiring Diagrams. The Contractor shall modify the existing schematic wiring diagrams to show the I/O interface and all modifications to control schemes, wiring, terminations, equipment, and other schematic revisions required for the control system replacement project. The Contractor shall be responsible for preparing revisions to the existing schematic wiring diagrams for all replacement systems, electronic updating of the drawings, and issue.

The format of the Contractor's design documents shall be consistent with the existing drawings, conventions and standards of the Purchaser.

The Contractor shall revise the existing drawings to include, but not be limited to, the following information:

- Addition of I/O point names and parameter information to schematic elementaries.
- Addition of I/O point names and address and polarity information to wiring diagrams, including existing wiring diagrams of I/O cabinets.
- Revised existing terminations, wiring, and hardwired control schemes.
- Revised miscellaneous drawing information, including notes, drawing references, and general references to equipment to be modified or replaced.
- Removal of equipment and devices; associated wiring, terminations, and schematic elementaries; and other references.

2A.4 EXISTING PLANT DOCUMENTATION. The Contractor shall coordinate requests for additional existing drawings from the Purchaser. The Purchaser will provide the latest available revision of these documents in an "as-found" condition.

2A.5 AS-BUILT DRAWINGS. During construction, startup, and commissioning, the Contractor shall maintain one full size set of all logic, configuration, mechanical, electrical, and architectural drawings in his central office at the jobsite as an as-built set. This as-built set shall contain all marks necessary to locate and identify any installations that are not

completed in accordance with the drawings. These drawings shall be updated weekly to agree with the actual field installation. At the completion of project activities, the contractor shall electronically update the revised drawings to reflect all as-built marks. The Contractor's electronically updated as-built drawings shall be turned over to the Purchaser after as-built updates are completed.

Section 3A - CONTROL SYSTEM EQUIPMENT
SubSection 2.1 - Distributed Control System - Technical Specification

3A.2.1.1 System Requirements. The Distributed Control System (DCS) shall provide the following functions as defined herein and in Section 3A.2.1.A:

- Data acquisition.
- Modulating (continuous) control.
- Discrete (sequential) control.
- Fail-safe protection
- Alarm monitoring.
- Information display.
- System data reporting.
- Short- and long-term data storage.

The DCS shall be a microprocessor based system, composed of modularized control processors and operator interface processors, connected through distributed communications networks. Each system component connected to the communications networks shall be assigned specific tasks. All components shall have the capability to communicate with one another through the communications networks.

Input/output (I/O) modules shall be used for interfacing with sensors and receivers in the plant.

Terminology in these specifications conforms to the definitions as given in applicable standards as specified in Section 3A.2.1.A. In addition, the following definitions shall apply:

Analog Point	Any analog input, analog output, or analog calculated variable.
Digital Point	Any digital input (low or high (SOE) resolution), digital output, or digital calculated variable.
Control Processor	An integral group of components used to execute control and data acquisition functions, consisting of power supplies, computer processors, memory, connection to the data highway communications network, and connection to the I/O communications network.
Operator Interface Processor	An integral group of components used to execute operator interface functions, consisting of power supplies, computer processors, memory, and connection to the data highway communications network.

Operator Interface Function	An interaction between the Operator and the DCS wherein the Operator issues a command, and the DCS executes the command and provides the feedback information on the monitor or the printer.
Operator Work Station	A video monitor or set of monitors driven by a single Operator Interface Processor (server or client) and controlled by a single Operator interface device (keyboard, mouse, etc.) where the Operator interacts with the control system and the plant processes and performs the Operator Interface Functions.
Engineer/Operator Work Station	Similar to the Operator Work Station in composition except this station provides additional features for the Engineer/Programmer to perform programming and configuration functions.
Control Functions	Those functions involved with scanning, scaling, and linearizing process data, solving analog or boolean control algorithms, and outputting commands to the plant processes and/or information to the Operator.
Modulating (Continuous) Control	Analog control loops that produce an analog output which continuously positions the final control element (control valve, damper drive, etc.) between the full close and the full open position, and the associated digital control logic for the control element interlocks, permissives, runbacks, etc.
Discrete (Sequential) Control	Digital control logic that produces a digital output which operates the controlled equipment (motor, dampers, valves, ignitors etc.) in discrete steps (on, off, open, close, etc.).
Data Acquisition Functions	Those functions involved with scanning, scaling, and linearizing process data, calculating, and displaying plant measurement data used for information, not direct control, in the form of control and information displays and reports.
Sequence-of-Events (SOE) Functions	Those functions associated with scanning, time tagging, and reporting the time of occurrence and sequence of digital input state change.

Foreign Device Interface	The hardware and software necessary to provide bidirectional communication between the DCS and third party devices by means of a serial data interface protocol. This includes all necessary device drivers and application software to transfer Analog Points and Digital Points, including parameters such as value or status, point description, alarm state, point quality tag, and time tag.
Remote I/O	Input/output equipment, including I/O modules, racks, power supplies, interrogation power supplies, and connection to the remote I/O communications network, located in areas physically remote from the associated Control Processor. This I/O may be housed in Contractor-furnished cabinets or in cabinets furnished by others.
Loop Oriented I/O Cards	Cards containing analog inputs, analog outputs, digital inputs, and digital outputs on a single card which are intended to be related to a single control loop.
Operator	Personnel that have knowledge and specific training to operate the plant and its equipment by using the features of the Operator Work Station.
Technician	Personnel that has knowledge and specific training to perform DCS hardware troubleshooting and maintenance, and to use the DCS system tools to troubleshoot plant equipment or control logic malfunctions. Technicians may also have knowledge and training to perform DCS system configuration at the Engineer/Operator Work Station.
Engineer/Programmer	Personnel that has knowledge and specific training to perform DCS system configuration at the Engineer/Operator Work Station, and to use the DCS system tools to troubleshoot plant equipment or control logic malfunctions.
User	Technicians and/or Engineers/Programmers that perform DCS system configuration at the Engineer/Operator Work Station.

3A.2.1.1.1 System Acceptability. The proposed equipment must be in commercial operation in a minimum of five power generating plants of scope and magnitude similar to that for which the equipment is proposed or provided as a part of this Contract. The system shall be

compatible with the electromagnetic environment for which it is included, and shall not misoperate or sustain damage from the influence of radiated or cable conducted fields typically found in power generating plants. The system shall be designed and equipped to withstand to the maximum extent possible, lightning surge by atmospheric electrical disturbance without damage or disruption. The system architecture shall accept new technology as it becomes available, and future system enhancements shall be compatible with the equipment supplied under this Contract so that extensive hardware and software retrofitting is not necessary. The Contractor shall not propose nor provide equipment from any manufacturer that is expected to be superseded or outdated by a later generation of equipment prior to the commercial operation date. All equipment shall be new, unused, and of the highest quality available from the manufacturer.

3A.2.1.1.2 System Integrity. The DCS design shall incorporate functional and component redundancy to ensure maximum reliability during system operation, so that no single component failure, with the exception of individual I/O modules, shall effect the Control and Data Acquisition Functions of the system.

Redundant controllers, transmitters, receivers, internal wiring and data busses, and cabling shall be provided on all data highway communications networks directly related to Control and Data Acquisition Functions. This includes the I/O communications networks from I/O to Control Processor and Control Processor to Control Processor data highway communications networks.

All processors performing Control and/or Data Acquisition Functions shall consist of a redundant pair of Control Processors. One member of the Control Processor pair shall be active; the other member of the pair shall be operating in a continuously updated, hot standby mode.

Internal power supplies shall be provided by the Contractor in a configuration so that the loss of one power supply shall not affect any control functions in the DCS.

The system shall be designed so that a failure of any Operator Interface Processor shall not cause the loss of more monitors than the total number of monitors specified per work station. Failure of communication between any Operator Interface Processor and its associated monitor(s) shall not cause the loss of more than one monitor.

The system shall be used in areas with plant radios. The DCS shall operate normally, with no degradation in I/O or network performance when subjected to the effects of a five watt transceiver at a minimum distance of 2 meters from a DCS cabinet, regardless of antenna orientation or transceiver frequency.

If a single set of disk drives is utilized by the Contractor's system for storage and access of control and information displays for all work stations, those disk drives must be furnished in redundant pairs, including all Operator Interface Processor and communications electronics required for the displays to access the operator interface communications network. As an alternate, each Operator Work Station may be furnished with integral memory (RAM and/or hard disk) for display storage and access, provided that each Operator Work Station has sufficient capacity to store and access all displays.

3A.2.1.1.3 Failure Modes. The Contractor's design shall carefully consider the effects of potential hardware and software failures on the functions being performed by the system. The system shall be designed to:

- Detect failures by the use of continuously running diagnostic routines and bring them to the Operator's attention.
- Provide hardware and software designs that react to failures in a predictable and repeatable manner.
- Mitigate the effects of failures by the use of equipment redundancy, software error correction, or other available means.

General cases of failure modes and the required system response are as follows:

- System Power Loss. System control outputs shall fail to a predefined safe status. Control Processors shall automatically restart upon restoration of power.
- Control Processor Failure. Control shall transfer to the backup Control Processor in a bumpless manner. If the backup Control Processor is not available, the outputs shall fail to a predefined status. Output failure status shall be User selectable for fail-in-place, fail high, fail low, fail on, or fail off.
- Control Processor to Data Highway Communications Network Failure. Failure of a single communication channel shall result in the bumpless transfer of communication to the redundant channel. In the case of failure of all communication, the Control Processor shall continue to operate and control its outputs, and information received over the data highway communications network shall be treated as signals with bad quality.
- I/O Subsystem Failure. Associated output points shall fail to a predefined safe status. Under failure conditions, inputs shall be treated as signals with bad quality within the Processor.
- I/O Subsystem to Control Processor Data Highway Communications Network Failure. Associated output points shall fail to a predefined and repeatable safe status. Output failure status shall be User selectable. Under failure conditions, inputs shall be treated as signals with bad quality within the Control Processor.
- Non-Redundant Foreign Device Interface Processor or FDI Communications Network Failure. Signals being received from the foreign device shall fail to a predefined status. Failure status shall be User selectable. Under failure conditions inputs shall be treated as signals with bad quality within the FDI Processor.
- Redundant Foreign Device Interface Processor or FDI Communications Network Failure. Functions shall transfer to the backup FDI in a bumpless manner. If the backup FDI is not available, the outputs shall fail to a predefined status. Output failure status shall be User selectable for fail-in-place, fail high, fail low, fail on, or fail off.

3A.2.1.1.4 System Timing. The update rate, processing rate, and response time of all Control Processors and the data highway communications network, and of the overall system shall be sufficient to maintain control over the plant processes and equipment under all system operating conditions including extreme upset conditions with all points in alarm.

At a minimum, the system shall scan all inputs and outputs, process all control logic, and perform all other functions required to record the changes and the time of the changes as follows:

- The scan rate for all I/O shall be User selectable.
- Analog inputs and analog outputs shall be scanned at least every 0.5 second with at least 10 percent of the inputs and outputs scannable at a 0.1 second interval.
- Digital inputs and digital outputs shall be scanned at least every 1.0 second.
- Digital SOE inputs shall be scanned at least every 0.001 second. The time resolution of these points in different Control Processors shall be the same as SOE points residing in the same Control Processor.
- All non-SOE alarms shall be time tagged to a resolution of 1.0 second.
- The processing rate for all control logic routines and calculations shall be individually selectable.
- Modulating Control logic and calculations shall be processed at least every 0.5 second with the capability to process at least 10 percent of the logic at a 0.1 second interval.
- Discrete Control logic shall be processed at least every 1.0 second.

At a minimum, the system shall respond to Operator commands and control system changes as follows:

- Time to completely generate a display shall not exceed 1.0 seconds.
- The indication of any variable, on all displays including alarm displays, shall be updated within 1.0 second of its value or status change.
- The time to respond to any Operator command shall not exceed 1.0 seconds.
- The time to respond for Foreign Device Interface functions shall not exceed 2.0 seconds (response time will not include the time required for the foreign device to respond to the DCS; only the actual bidirectional communication time shall be considered).

The response time is the total elapsed time for transmission of data through the system communications path. This time shall include all communication time from Control Processor to Control Processor, I/O scans, nodes, Foreign Device Interfaces, monitors, keyboards, and associated equipment internal to the system.

3A.2.1.1.5 System Spare Capacity. The Contractor shall provide the spare capacity listed in Section 3A.2.1.A, after complete engineering and implementation of all specified functions. The spare capacity will be used to accommodate any Control and Data Acquisition Functions that may be added to the system during the startup phase of the project and thereafter.

Spare I/O shall include all required I/O modules, power supplies, cabling, and terminal blocks. Spare I/O points and spare terminal blocks shall be spaced evenly throughout each cabinet.

Spare card slots shall be fully equipped with hardware and wiring at the time of shipment so that all that is required to activate and use the slot is the addition of a new module. The system shall include all backplane wiring, card to terminal block wiring, and power supply wiring necessary to support the spare capacity. Where terminal blocks or terminal cards are unique to the type of I/O module to be installed, the cabinet design shall be such that the new

I/O module to termination device wiring and the termination device can be easily installed by the User.

For components of the system that have modular power supplies, the Contractor shall provide the spare space/slots listed in Section 3A.2.1.A. For components of the system that have nonmodular power supplies, the Contractor shall include sufficient power supply capacity to fully utilize the available spare slots without the addition of power supply modules.

3A.2.1.1.6 Service Conditions. All equipment shall be designed for operation in plant areas with the environments defined in Section 3A.2.1.A.

2.1.2 Processing Functions

3A.2.1.2.1 Input/Output Processing. During each scan cycle, the system shall perform the following input processing functions:

- Apply time tag (at remote equipment for all Remote I/O, at I/O card for all digital SOE inputs).
- Software filters shall be provided in addition to the hardware filters for certain analog inputs as determined during detailed design.
- Open circuit detection (thermocouple inputs).
- Sensor limit (signal out-of-range)/field signal loss check (including quality classification as good, questionable, or bad, or some other similar set of designators).
- Thermocouple reference junction temperature compensation shall be provided.
- All analog outputs shall be monitored by continuous system diagnostics. (An open loop in any analog output shall result in a control action to be defined during detailed design.)

The system shall provide the following additional processing capabilities for all I/O:

- Provision to manually substitute (force) values.
- Provision for each I/O to be removed from and returned to scan.

The actual points requiring manual substitution and scan control shall be as determined during detailed design.

3A.2.1.2.2 Input Calculation Processing. The system shall convert analog inputs into engineering units. This conversion shall be software based so that each point can have its own zero and range. Conversion types shall include linear, squared, square root, thermocouple, RTD, flow compensation, polynomial approximation for special input conversion, logarithmic conversions, and all other types required for the application. Standard conversions shall be provided for all specified thermocouple and RTD types of both degrees F and degrees C. Each conversion type shall handle different ranges for the variable. High level programs shall be used for special conversion types.

The system shall perform real-time calculations using all of the input data processed. Calculation routines shall include, as a minimum, the following:

- Arithmetic, algebraic, exponential, and trigonometric functions.
- Time-based functions (integration, rate-of-change, moving average, and similar functions).

- Boolean calculations.

The system shall further perform real-time calculations using the calculated variables.

Point quality shall be carried through all control algorithms and calculations where required for control and Operator indication, and the data value shall be displayed as asterisks or with a quality tag if the quality is other than "good."

Digital inputs will have one or more of the following functional uses:

- Alarms.
- Logic functions.
- Control functions.

Digital SOE inputs shall have the same functional uses and shall also be used to determine the cause of trip of major items of plant equipment.

3A.2.1.3 Modulating (Continuous) Control Functions. The Contractor shall engineer and configure a complete set of programmed instructions to execute the Modulating Control functions specified in Section 3A.2.1.A.

The written descriptions and/or functional logic diagrams provided by the Purchaser describe only the main logic strategies. The "housekeeping" functions such as rejection to manual, signal tracking, bumpless transfer, generation of alarms, internal and external displays, and the like, are not described. The logic developed and configured by the Contractor shall include tracking, indexing, reset antiwindup, bumpless transfer, and all other functions required to prevent control system and process upsets when any system mode is changed automatically or by the Operator. The Contractor's configuration shall include directional blocking of control outputs to prevent exceeding limits on critical operating variables where required by code compliance and good operating practice.

The written descriptions and/or functional logic diagrams provided by the Purchaser describe the minimum criteria for the control system. However, it is not intended to limit the operation, function, and safeguards to those mentioned or implied. The Contractor shall make any additional suggestions or recommendations that will improve the proposed operational procedures or method of control. All of the logic configuration required to constitute a fully integrated, complete, and operable startup, shutdown, and on-line control system shall be supplied whether or not specifically detailed. All modifications recommended by the Contractor shall be reviewed and approved by the Purchaser.

All Modulating Control loops shall have automatic and manual capabilities as required by system design. Protective interlock actions (priority increase, priority decrease, hold) shall be enforced by the system logic regardless of whether the control loops involved are in automatic or manual control. The control system shall enforce a predetermined order of initiating automatic control of related functions. If a lower level loop is commanded to manual control, the related upper loops shall automatically reject to manual control. System capability shall allow Analog Point quality as determined during input processing to be used to reject associated loops to manual control as determined during detailed design. A control

loop which has been rejected to manual control shall not revert to automatic control without Operator initiation.

In cases where the DCS modulates more than one similar auxiliary device (e.g., FD fans, spray valves, etc.), the logic shall automatically compensate the tuning constants of all affected control loops so as to provide equally responsive control no matter which combination of auxiliary devices may be in service and on automatic. The DCS shall permit automatic operation of some similar auxiliary devices even though some of such devices which may be in service are being operated manually. The control system shall include function generator compensation to outputs so as to linearize control response when modulating final devices which may not be linear, as required by system design.

Multiple input signals will be provided for the variables including, but not necessarily limited to, those listed in Section 3A.2.1.A. The control system shall provide logic to allow the Operator to select the multiple measurement mode. The modes shall include selection of any one of the measurement signals, the average or the median of the signals. The logic shall also automatically allow selection of only those inputs that are not in "bad" quality. Comparison logic shall be provided to determine and alarm significant deviation of the signals. Deviation alarms shall be factory programmed by the Contractor at +/-5% of measurement span. If determined during detailed design, such a deviation shall reject all control loops associated with this signal to manual. Means shall also be provided to enable resumption of automatic control in the event of such a rejection at the Operator's discretion.

The control system shall provide logic to accumulate pulses, and shall allow manual and automatic hold and reset of the pulse accumulation. The logic shall also convert the accumulated pulses to engineering units.

The logical connections between functional blocks within all logics shall be represented in engineering units. It shall not be acceptable to present these values as a 0 to 100 percent signal, which requires that the User manually convert the values to engineering units to troubleshoot equipment or configuration problems.

3A.2.1.3.1 Operator Interface Functions. Operator Interface Functions shall include interface to analog control loops, multiple measurement loops, and pulse accumulator loops, by the Operator from faceplates on the Operator Work Station monitors.

The analog control loop control stations shall simulate conventional hand/auto stations, allowing the Operator to select mode and to provide manual interface commands, and shall provide a display of all relevant variables associated with the control loops including the set point, the feedback signal, the control signals, and the status of the loop.

The required modes of operation and Operator controllable parameters shall be as follows:

> Automatic Mode. This mode shall permit full automatic operation of the system with no intervention on the part of the Operator except for the functions designated as Operator adjustable, such as set point adjustment and biasing of control signals.

Manual Mode. This mode shall permit manual "Raise" and "Lower" of system demand signals.

Operator interface for analog control loops shall also include one, two, three, and four vertical bar indicating stations for indication of analog values. Each vertical bar on the station shall also display a short description of that point, and the point's process value and engineering units.

The multiple measurement loop control stations shall allow the Operator to select the multiple measurement mode, and shall provide a vertical bar and analog value display for each of the analog inputs and for the multiple measurement loop output. The station shall also display the multiple measurement mode and quality of each analog value.

The pulse accumulator loop control stations shall allow the Operator to reset and hold pulse accumulation, and shall provide an analog value display of the accumulated total.

All Operator interface command functions, except screen paging, shall be designed for two-step operation. The Operator shall be required to make one keyboard, touchscreen, or mouse/trackball action to select the function to be performed and a second keyboard, touchscreen, or mouse/trackball action to execute the function. For example, the Operator must select the "Auto" button for a device and must then select to execute the auto function to prevent accidental activation of control commands.

The system shall provide system displays for on-line monitoring of control logic signal flow on any Operator Work Station in the system. These displays shall use color and other unique symbology or nomenclature to indicate input and output values, block parameters, and signal flow path for all function blocks and associated connections.

3A.2.1.3.2 General System Performance. During transient conditions causing deviations of process variables, the control system shall not permit deviations that exceed those required to safely operate the plant. The DCS shall be capable of producing smooth load changes without overshoot, based on the general guidelines indicated in Section 3A.2.1.A, unless these changes are not achievable because of plant equipment limitations. In no event shall the performance of the control system become the limiting factor on plant responsiveness. The process and mechanical end elements should be the limiting elements in the control of the process.

3A.2.1.4 Discrete (Sequential) Control Functions.

3A.2.1.4.1 Motor Control Functions. If required by Section 3A.2.1.A, the Contractor shall engineer and configure a complete set of programmed instructions to execute the motor control functions, which shall include, but not necessarily be limited to, the following:

- Start/Stop of motors for fans, pumps, other motor operated and assisted equipment.
- Open/Close of electrically operated breakers.
- Open/Close/Stop of motor-operated valves and dampers.
- Open/Close of solenoid-operated valves and dampers.

3A.2.1.4.2 Burner Control Functions. If required by Section 3A.2.1.A, the Contractor shall engineer and configure a complete set of programmed instructions to execute the burner control functions, which shall include, but not necessarily be limited to, the following:

- Main fuel trip (MFT) under abnormal operating condition with cause of trip alarm.
- Enforced, controlled furnace purge sequence upon establishment of all purge permissive conditions.
- Remote startup and shutdown of ignitors, coal pulverizers, feeders, and/or burners with permissive checks and protective interlocks.
- Continuous monitoring and indication of ignitor and burner flame using individual burner flame detectors with automatic shutdown of firing equipment as required.
- Remote manual control of each piece of the controlled equipment.

It shall be the Contractor's responsibility to determine and incorporate the latest NFPA codes and the boiler manufacturer's recommended operating procedures for the steam generator and burner equipment into the system.

3A.2.1.4.3 Fail-safe Protection Functions

The Contractor shall engineer and configure a complete set of programmed instruction to execute the protection (shutdown) function of the plant, which shall include, but not necessarily be limited to the following:

- Boiler protection
- Main fuel trip (may be included in the burner control system)
- Turbine protection (may be included in the turbine control system)
- Trip required for generator protection (may be included in the turbine control system)
- BFPT protection (may be included in the boiler feed pump turbine control system)
- HP / LP by-pass station protection

All of the main equipment components of the plant shall be protected by interlocks and automatic tripping devices to guarantee safe operating state of the plant and to avoid major physical damages to the hardware.

The protection system design shall be based on fail-safe, active-current (deenergize-to-trip) philosophy. Any single failure shall be detected and alarmed through an integrated, on-line, self-diagnostic facility. In case of any single failure (e.g. faulty sensor / transmitter), an automatic adjustment in the associated logic gate (e.g. reduction from 2-of-3 to 1-of-2 shall take place. Internal protection system faults must neither cause false protective trips nor prevent true (process-related) protective trip signals from actuation.

The protection system (including power supplies) shall be of redundant design with equipment redundancy and tripping philosophy complying with the relevant Standards and Codes.

3A.2.1.4.4 Operator Interface Functions. Operator Interface Functions shall include mode selection and initiation of manual commands, made by the Operator from control stations on the Operator Work Station monitors. The control stations shall provide control functions, including, but not necessarily limited to, the following:

- Start, stop, open, close, auto, manual, reset, and trip commands.
- Maintained push buttons.
- Momentary push buttons (with adjustable pulse duration).
- Status indication for motor running/stopped/tripped and valve open/closed.
- Indication for equipment mode, permissive condition, failure condition, first-out indication, and operational sequence status.

All Operator Interface Functions, except screen paging functions, shall be designed for two-step operation. The Operator shall be required to make one keyboard, touchscreen, or mouse/trackball action to select the function to be performed and a second keyboard, touchscreen, or mouse/trackball action to execute the function. For example, the Operator must select the "Start" button for a device and must then select to execute the start function to prevent accidental activation of control commands.

The system shall provide system displays for the on-line monitoring of control logic signal flow on any Operator Work Station in the system. These displays shall use color and other unique symbology or nomenclature to indicate on-state, off-state, and signal flow path for all logic blocks, contacts, coils, and associated connections.

3A.2.1.4.5 Device Tag-out Function. The system shall allow the Operator to place any plant motor or solenoid operated device in a "tag-out" condition from a control station for that device. The tag-out function shall simulate placing a "Do Not Operate" tag on a physical control station, but will not replace the requirement for electrical and/or mechanical disabling of the equipment prior to maintenance.

The Operator will be required to place the device's mode and output in the desired state prior to initiation of the tag-out function. The system shall then prevent the changing of the output or the mode of the associated logic either by the Operator or by the control logic while in the tag-out state. Tag-out status shall be stored in nonvolatile memory, so that the tag-out state is retained on Control Processor failure and subsequent restart.

The Contractor shall provide device tag-out logic and Operator interface configuration for all power operated valves, motors, and electrical supply breakers included in the scope of the Contractor's programming services.

3A.2.1.5 Alarm Functions.

3A.2.1.5.1 Analog Alarm Functions. The system shall perform comparison of limits functions on any or all Analog Points, as determined during detailed design. The system shall allow the User to define and build alarms and to selectively activate or deactivate these alarms. Each analog input variable, or calculation result, shall have an individual set of alarm limits. These limits shall be either manually set, calculated as functions of other variables, or rates of change with time. Violations of these limits shall initiate alarms and/or initiate execution of special software programs. The analog alarm functions shall be on a per Analog Point basis, and shall include, but not be limited to, the following:

- Provision to assign high and low transducer range limits for quality determination.
- Provision for Analog Points to be deleted from and restored to alarm status by the User or automatically from internally generated variables. The removal from alarm status whether initiated by the Operator or automatically initiated shall be logged with time of occurrence.
- Provision to assign high and low alarm limits, and at least one level of incremental alarm limits, either fixed or as a function of another system point.
- Provision to assign an alarm deadband.
- Provision to assign rate of change alarm limits and deadband.
- Provision to impose alarm cutout conditions as a function of another system point.

3A.2.1.5.2 Digital Alarm Functions. The system shall compare the status of any or all Digital Points (Digital inputs and/or SOE Digital inputs) against the User selectable alarm state of these points, as determined during detailed design. The system shall allow the User to define and build alarms and to selectively activate or deactivate these alarms. Digital Points entering the alarm state shall initiate alarms and/or initiate execution of special software programs. The digital alarm functions shall be on a per Digital Point basis, and shall include, but not be limited to, the following:

- Provision for Digital Points to be deleted from and restored to alarm status by the User or automatically from internally generated variables. The removal from alarm status whether initiated by the Operator or automatically initiated shall be logged with time of occurrence.
- Provision to alarm on a Digital Point status of "1" (on) or "0" (off).
- Provision to alarm Digital Points on any change of status.
- Provision to impose alarm cutout conditions as a function of another system point.

3A.2.1.5.3 System Alarms. The system shall provide alarms for system failure conditions including, but not limited to, the following:

- Loss of any redundant power feed.
- Cabinet temperature high or loss of power to cabinet cooling fans (for all electronics cabinets).
- Power distribution breaker trips and/or blown fuses.
- Loss of any voltage level from any power supply.
- Battery low (many hours before deterioration to the extent that it cannot maintain the functions of the equipment it supplies).
- Failure of any Control Processor.
- Failure of any Operator Interface Processor.

- Failure of any system input or output module.
- Failure of any Foreign Device Interface.
- Failure of any communications controller.
- Diagnostic programs shall have routines to generate component status alarms. These alarms shall include, but not be limited to, the following:
  - -- Control and Operator Interface Processor failure.
  - -- Communications failure.
  - -- Disk read/write error.
  - -- Printer failure.

All failure alarms shall identify the failure at least to the cabinet level and preferably to the module or card level. All failures and malfunctions, when detected, shall immediately be alarmed through the Operator Work Stations and recorded on the alarm printer(s).

2.1.5.4 Alarm Annunciation. The system shall allow any Operator Work Station to be designated the alarm work station, and this designation shall be Operator selectable. All alarms shall be displayed on the alarm work station monitor. The system shall also include an audible alarm that shall have adjustable volume control. The audible alarm shall be User configurable for different tones or patterns to distinguish between a minimum of four alarm priority levels. The system shall use global alarm acknowledgment, allowing a single acknowledgment from any work station, whether designated as the alarm work station or not, to acknowledge that alarm on all work stations and to silence the audible alarm.

The system shall record all alarm events to a disk file in chronological order.

A printer shall be designated as the alarm printer which shall automatically print out each alarm event and alarm reset as it occurs. The alarm printer designation shall be User selectable. In the event the DCS detects the printer selected as alarm printer is unavailable, the DCS shall transfer the alarm printing functions to a utility printer; or if no printer is available, the DCS shall retain the alarms in buffer memory for printout on the first available printer.

3A.2.1.6 Calculations.

3A.2.1.6.1 Real-Time Variable Calculations. The system shall perform real-time variable calculations using input data and other calculated variables. The Contractor shall be responsible for performing all calculations required to meet the control and information functions specified herein.

Calculated variables are defined as system database points that are derived from software calculations of a level higher than the initial input point conversion to engineering values. These calculated variables shall be available for use in other calculations, control logic, control and information displays, reports, trending, historical data storage, and Foreign Device Interfaces.

These calculations shall include all functions commonly used in boiler-turbine control systems and all other functions specified herein. The Contractor shall supply all standard formulations such as thermodynamic properties, pressure compensation, temperature compensation, specific volume, etc. Where required, an extensive set of steam property subroutines shall be included.

All calculation results shall be automatically quality coded according to the worst quality of any of the inputs to each calculation.

These calculations shall include, but not be limited to, the following:

- Enthalpy.
- Mass flow.
- Relative humidity.
- Density correction for steam.
- Density correction for water.
- Density correction for air.
- Density correction for fuel gas flow.
- Approach to saturation.
- Steam quality.
- Regression (nth order, linear geometric, exponential) calculations of a factor expressed in terms of measured variables, for example:
    - -- Specific heat of a gas at measured temperature and pressure.
    - -- Predicted gas turbine outlet temperature as a function of load.

3A.2.1.6.2 Performance Calculations. Performance calculations shall be configured as specified under Performance Calculations in Section 3A.2.1.A. If a third-party performance monitoring software package is specified under Performance Calculations in Section 3A.2.1.A, the Contractor shall furnish all required processing hardware, software drivers, communications hardware, and communications software in addition to the performance monitoring software.

These calculations shall be performed automatically, generally for the purpose of detecting and alarming plant malfunctions and determining the performance of individual items of equipment. The calculation interval shall be User selectable. Not all calculations shall require the same interval.

In general, these calculations shall be performed using methods described in the test codes listed in Section 1D.2. These calculations shall be performed using averaged data which is accumulated over a period of time. This time period shall be User selectable from 0 to 10 minutes. If the test codes require measured data that is not actually available in the process, manually inserted values shall be used. The system shall include provisions for substitution of values in the data set. The User shall be able to input fuel analysis data and other manually inserted data into the system for the calculations.

The Contractor shall be responsible for altering his performance programs to comply with this specification and to conform to the actual process cycle.

The Contractor shall provide all displays and reports required to show the results of the performance calculations, including trend displays of pertinent data and controllable losses screens if applicable. The displays and reports shall be in addition to the quantities listed under Control and Information Display Functions and System Data Reporting Functions in Section 3A.2.1.A.

3A.2.1.7 Control and Information Display Functions. The display functions as described herein shall be assignable by the Operator to any DCS work station within the system.

All system points including analog, digital, and calculated variables shall be capable of being displayed on the Operator Work Station monitors. The use of color on the displays shall serve to rapidly draw Operator attention to important data. The color of each item shall be as determined by the Purchaser during the design phase of the system. Time and date shall be displayed on each display.

3A.2.1.7.1 Trend Displays. Trend displays shall simulate a multiple pen strip chart recorder and shall consist of a time plot of a minimum of eight points concurrently. Each trace shall be in a unique color. Alphanumeric information shall be overlayed on the same screen to identify points, scales, current value, and related information. Chart rolldown shall be included. Chart roll shall be in the horizontal direction with the latest value appearing at the right-hand side of the screen. Time shall be plotted on the horizontal axis. The Operator shall be able to set the zero and full-scale values for each trended variable in any screen location. The system shall permit the Operator to set the grid roll speed and the interval between time lines. The system shall provide standard trend displays with variable full-scale time ordinates. All trends shall be backward and forward scrollable from the trend start time. Selection of points to be trended shall be menu driven.

The system shall allow any system variable to be trended, and shall allow points from short-term and long-term storage to be trended. The trend display period between points on trends using data from short-term and long-term data storage shall be the same as the storage frequency selected for those points. Trending resolution shall not be coarser than ±1/2 percent full scale using pixel displays.

The system shall also provide the capability to incorporate trend displays into any User created control or information display.

The system shall be sized to allow simultaneous designation of the quantity of trend displays specified in Section 3A.2.1.A. Trend displays will be defined by the Purchaser and shall be configured at the factory by the Contractor in the quantity specified in Section 3A.2.1.A.

3A.2.1.7.2 Bar Chart Displays. Upon request, the system shall display dynamic bar charts. The bar chart format shall consist of a series of separate display pages, each with a minimum of 20 vertical or horizontal bars. Each bar shall represent the value of a measurement. Alphanumeric information shall be overlayed on the same screen to identify points, scales, current value, and related information. Each point shall have high and low alarm limit values which shall be shown. Any bar in the group which traverses beyond its alarm limits shall be identified by a change in color. The system shall be sized to allow simultaneous designation of the quantity of bar chart displays specified in Section 3A.2.1.A. Bar chart displays will be

defined by the Purchaser and shall be configured at the factory by the Contractor in the quantity specified in Section 3A.2.1.A.

3A.2.1.7.3 X-Y Plot Displays. Upon request, the system shall graphically display the relationship between two Analog Points on X-Y plots. This display shall permit up to four points on the Y-axis to be plotted against a single point on the X-axis.

The system shall have the capability to store curves (value of Y expressed as a function of X such as a pump curve) and impose the curves on the X-Y plots as static displays.

Alphanumeric information shall be overlayed on the same screen to identify points, scales, current values, and related information. The system shall be sized to allow the quantity of X-Y plot displays specified in Section 3A.2.1.A. X-Y plot displays with static curves will be defined by the Purchaser and shall be factory configured by the Contractor in the quantity specified in Section 3A.2.1.A.

3A.2.1.7.4 Process Control Displays. The DCS shall include process control displays designed to provide the means for the operator to monitor and control the plant equipment. Each process control display shall contain textual, geometric graphic, dynamic analog trending, dynamic bar chart, and alarm information representing plant systems, equipment, and other process information.

The process control displays shall be implemented on a high-resolution display system that, at a minimum includes the following capabilities:

- Each display shall allow selection of at least 256 colors from a color palette of at least 65536 colors.
- Alphanumeric characters shall be displayable in different sizes.
- Dynamic numeric data linked to analog variables shall display the current numeric value of the variable, scaled as specified in the database, with engineering units.
- The latest in pictorial abilities such as automation of symbols with three-dimensional effects applied to lines and symbols shall be available.
- Standard geometric shapes shall include, as a minimum, lines, polygons, rectangles, arcs, ellipses.
- Standard geometric symbols (tanks, vessels, pipe, valves, etc.), and the ability to create new symbols using standard symbols and standard geometric shapes shall be included.
- The capability to fill any closed geometric shape with any available color shall be included. This capability shall allow fill in proportion to the value of an analog variable, and to select the fill color in response to the analog variable or according to the status of a discrete variable.

The display system shall also include the following User selectable capabilities:

- Creation, modification and selection of colors in the color library.
- Definition of attributes of all textual and geometric graphic elements, such as color, line weight, line type, blinking, and dynamic conditional linkage to system variables and attributes.

The system shall provide at a minimum, the capability for any process control display to show 200 dynamic variables (analog and digital) and/or geometric symbols, control 10 data entry points, and control 100 target points. Based on an Operator clicking on or selecting a dynamic variable, the system shall provide the functionality to jump directly to its point detail display. Through Operator entry of a value into a data entry point, the system shall provide the functionality to store and use that value for process and equipment control, for example, sending operation limits of the plant or other manually entered data to the dispatch system via database points. By an Operator clicking on or selecting a target point the system shall, at a minimum provide the following functionality:

- Activation of a "pop-up" control station as defined below, to allow process and equipment control.
- Activation of a display and/or trend.
- Provide tag or point detail and description.

The system shall be sized to store and display the quantity of process control displays specified in Section 3A.2.1.A. Process control displays shall be defined by the Contractor, and issued to the Purchaser for review, prior to being factory configured by the Contractor in the quantity specified in Section 3A.2.1.A. For bidding purposes, the Contractor shall assume that each process control display will include 100 dynamic variables (analog or digital) and/or geometric symbols and control 50 target points.

3A.2.1.7.4.1 Pop-up Control Stations. The system shall include pop-up control stations which the Operator can call-up to operate the plant equipment. Each control station shall "pop-up" on the current process control display when selected by the Operator. The system shall not allow simultaneous display of more than one pop-up control station on any process control display. The pop-up control stations shall provide the Operator Interface Functions specified in Articles 3A.2.1.3.1 and 3A.2.1.4.4.

The system shall include a library of predefined pop-up control station templates that shall be used to create control stations for Operator control of plant equipment. Templates provided shall include auto/manual analog control stations, bias stations, hand stations, ratio stations, motor control stations, valve/damper control stations, burner control stations, equipment tag-out stations, pulse accumulator control stations, and multiple measurement control stations. The system shall allow the User to add to or modify templates in the library as well as to create a unique User library.

Each control station template shall be available as many times as needed by defining the text and database point information specific to a particular piece of plant equipment. The system shall allow a control station for any plant device to be selectable from as many process control displays as required for proper plant operation.

3A.2.1.7.5 Faceplate Displays. Faceplate displays shall be defined as a fixed grouping of pop-up comparable control stations designed to provide a set of related Operator control functions. If required by Section 3A.2.1.A, the Contractor shall configure faceplate displays in the quantity specified therein. The Contractor shall define the grouping of control stations for each faceplate display as required to provide for safe and efficient operation of plant equipment. Control station groupings shall be submitted to the Purchaser for review prior to faceplate display configuration.

3A.2.1.7.6 Text Displays. The DCS shall include text displays to provide information to aid in the operation of the plant and its equipment. Text displays shall include equipment permissive displays, help displays, equipment run time displays, and sequence displays.

Equipment permissive displays shall be provided to dynamically indicate the conditions which must be met for a designated piece of equipment to start or operate. Color differentiation shall be used to inform the Operator of the current status (allow or disallow operation) of each condition. Access to an equipment permissive display shall be by a single Operator command once the equipment has been selected.

Help displays shall be static text displays that provide guidance messages on the operation of the DCS or plant equipment. Access to a help display shall be by a single Operator request once the operation or equipment has been selected.

Equipment run time displays shall be provided to dynamically indicate the accumulated running time in hours for selected plant equipment. The displays shall include the ability for the Operator to individually reset the counter for each device.

Sequence displays shall provide dynamic indication of the status and progress of equipment, group, and unit level startup and shutdown sequences. The displays shall include static text for each step of the startup, dynamic text to indicate process values or statuses, and links to other displays for individual equipment startup. The sequence displays shall include, for each step, an individual indication that confirms that each step has been completed. Sequence displays shall provide the Operator with the ability to start, stop, step, hold, and set the mode of each sequence.

The system shall be sized to store and display the quantity of text displays specified in Section 3A.2.1.A. Text displays will be defined by the Purchaser and shall be configured at the factory by the Contractor in the quantity specified in Section 3A.2.1.A. The quantity of each type of text display will be selected by the Purchaser.

3A.2.1.7.7 Group Displays. The system shall allow the User to create and store text type displays which show the tag name and point description adjacent to the current value or status of selected groups of points. The User shall be able to create each display from a Contractor programmed template which allows the User to enter the point tag name for at least 50 points in a columnar format. The system shall provide storage for 50 such groups for display by the Operator.

3A.2.1.7.8 Alarm Displays. The text type alarm displays shall display all points (analog or digital) in the alarm state in the form of written messages with each message containing tag name, point description, time tag, point value or status, and alarm limit.

The alarms shall be displayed on the monitor in the order of occurrence. An alarm, when first output to the screen, shall be displayed on the top line of the screen. A newer alarm shall push all older alarm messages on the screen down by one line. All alarm messages pushed out of the screen shall be backlogged and organized in pages.

The system shall be capable of displaying the backlogged alarm pages on demand by the Operator. When an alarm point has been returned to normal, the message shall disappear from the display after it is acknowledged. The system shall categorize all points in alarm into priority levels, and distinctions shall be made between high priority level and low priority level alarms when displayed on the monitors and printers.

The system shall allow the Operator to filter the alarm display on any Operator Work Station by priority or specific plant area (if the User has assigned plant areas). The filter shall be applied to the alarm display on that particular Operator Work Station only.

A separate alarm history display shall be provided which displays the most recent 5,000 alarm occurrences in chronological order. The alarm history display shall display alarms of all priorities, incremental alarms, and return to normal messages.

3A.2.1.7.9 System Displays. The Contractor shall provide a hierarchy of system displays that provide status and health information for the system and for all individual components (cards, modules) within the system. These system status displays shall provide the User with a detailed view of the system as designed to indicate the status of each component along with an associated diagnostic summary for each component. Equipment status indication shall be distinctive so as to allow determination of health, trouble, or fault for each Operator Interface Processor, Control Processor, power supply, I/O module, and associated memory or special function module used in the system. These system displays shall be in addition to the quantities of displays listed under Control and Information Display Functions in Section 3A.2.1.A. Additionally, the capability to show information on instrument and device status available from HART, Fieldbus, and Profibus compatible field instruments shall be included.

3A.2.1.7.10 Summaries. The system shall be configured to allow the Operator to display on any Operator Work Station monitor and print the following summaries:

- Summary of all points in alarm.
- Summary of all existing "bad" quality points.
- Summary of all existing points with substituted (forced) values.
- Summary of all existing points not being scanned or alarm limit checked.
- Summary of all existing analog and digital inputs and outputs with point specifications such as ranges, limits, etc.
- Summary of all points in tag out.

3A.2.1.8 System Data Reporting Functions. The DCS shall provide data reporting functions as defined herein. All reports shall be made from stored data so that once a report is initiated it can be completed without interruption. The system shall include major types of reports described below.

The system shall include a library of Contractor-configured report formats as specified in the following articles. Contractor-configured reports shall include all required headers, footers, subheadings, column headings; and descriptive text. The quantity of Contractor-configured reports shall be as specified in Section 3A.2.1.A. All reports and summaries shall be configured and tested by the Contractor prior to the factory acceptance test.

The system tools shall allow the User to assign run-time properties to any report format, such as specific point tagnames, title, filename, execution time or event information, and destination. For each report the User shall be able to define whether that report is sent to a printer, viewed on screen, or saved as a file with complete formatting information. Supported file types shall include, as a minimum, comma-delimited ASCII, Microsoft Excel spreadsheet, and HTML.

3A.2.1.8.1 Periodic Reports. Periodic reports shall contain the current and averaged values of system variables collected during the period. The reports shall be printed out automatically at designated times, and on demand by the Operator. Each report shall be designed to collect data for a minimum of 100 tags. The actual number of points contained in each report, the points to be collected, and the print times shall be User selectable.

3A.2.1.8.2 Trend Reports. Trend reports shall contain current and averaged values of system variables at predetermined intervals. The reports shall be printed out automatically at designated times, on demand by the Operator, and automatically on the occurrence of a designated event. Each report shall be designed to collect data for a minimum of 100 tags. The actual number of points contained in each report, the points to be collected, the print times, the length of the collection intervals, and the designated event shall be User selectable.

3A.2.1.8.3 Post-Trip Review Report. The post-trip review report shall contain current values of system variables at predetermined intervals before and after a plant or major equipment trip. The report shall be printed out on demand by the Operator. The report shall be designed to collect data for a minimum of 100 tags. The actual number of points contained in the report, the points to be collected, the length of the collection intervals, and the number of collections before and after the trip shall be User selectable.

3A.2.1.8.4 Maintenance Data Report. The maintenance data report shall calculate and display the number of starts and stops and the accumulated running time of all rotating equipment monitored by the system. The report shall be printed out automatically at designated times and on demand by the Operator. The report shall be designed to collect data for a minimum of 100 pieces of equipment. The actual quantity of equipment contained in the report and the print times shall be User selectable.

3A.2.1.8.5 Housekeeping Report. The housekeeping report shall contain a listing of all changes made to the system by operating and engineering personnel. The reports shall be printed out automatically at designated times and on demand by the Operator. The print times shall be User selectable.

3A.2.1.8.6 Sequence-of-Events Report. The Sequence-Of-Events (SOE) report shall contain the status changes of all SOE points, from all Control Processors, after a status change of a trigger point. The system shall allow any or all SOE points to be a trigger point, and this designation shall be User selectable. The report shall be printed out after a designated time delay. The designated time delay shall be User selectable. The system shall store the reports of the five most recent events, in chronological order, for later retrieval on demand by the User.

3A.2.1.8.7 User Reports. The system shall also include a report writer package that allows the User to create, edit, and store new reports and new report formats in addition to the

Contractor-configured reports defined above. The reporting package shall allow reports to be built in a flexible free-format environment similar to commercial spreadsheet software and shall provide the following features.

- Real-time data, historical data, and messages combined in flexible layouts to produce meaningful reports.
- Information such as headers, footers, number of columns, column format, column headings, calculation equations, and descriptive text defined and entered by User for each report.
- Reports enhanced through the use of various formatting styles, color to highlight information, and insertion of charts such as bar charts, trend graphs, and pie charts.
- User created templates and macros for frequently used formats.

The system shall provide storage for the quantity of User reports defined in Section 3A.2.1.A.

3A.2.1.9 Historical Data Functions. The DCS shall provide historical data functions as specified herein. The data collection and storage system shall provide the following features:

- Collection frequency, point collection delta value, or collection change of state shall be User selectable on a per point basis. At a minimum, collection frequencies of 1 second, 10 seconds, 1 minute, 10 minutes, and 1 hour shall be provided.
- Point data to be stored, at minimum, shall consist of tagname, value or status, quality information, and time tag.

3A.2.1.9.1 Short-Term (Trend) Data Storage. If required by 3A.2.1.A, the Contractor's system shall provide short-term data storage to allow data retrieval for recent and active trend displays. Any system variable (I/O point, calculated variable, etc.) shall be available for storage. This stored data shall be available for display in any trend display, any process control display, or any report.

The system hardware and software shall be sized to allow collection and short-term storage and provide consumables as defined in Section 3A.2.1.A.

3A.2.1.9.2 Long-Term (Historian) Data Storage. If required in Section 3A.2.1.A, the Contractor shall provide a complete (hardware and software) long-term data storage system to store plant data and information on permanent storage media for later retrieval and use. The historian shall utilize relational database technology to provide storage of plant information in a format that is accessible to all DCS applications as well as external databases and third-party applications. A relational database management system (RDBMS) shall be included to allow data access through standard ODBC (Open Database Connectivity) and SQL (Structured Query Language) queries. The retrieved data shall be available to any of the normal system peripheral devices such as Operator Work Station monitors and printers. The long-term data shall be available for use in trend displays, process control displays, reports, and calculations.

The data collection and storage system(s) shall provide the following additional features:

- Any system variable (I/O point, calculated variable, etc.), system message, or file (alarm list, periodic report, SOE report, etc.) shall be available for storage.

- Ability to execute periodic summary calculations, such as average value, minimum value, maximum value, summation, or runtime shall be User selectable on a per point basis.
- Storage of additional parameters such as point description, engineering units, scaling information, and alarm limits shall be User selectable on a per point basis.
- Storage of control function block parameters (set point, deviation, block output) shall be User selectable on a per block basis.

The system hardware and software shall be sized to allow collection and permanent storage as defined in Section 3A.2.1.A. The permanent storage medium shall be optical disk, CD-ROM, or DVD as defined in Section 3A.2.1.A. All Operator interfaces to the disk subsystem shall be menu driven with any special command structures transparent to the Operator. Data shall be automatically written to disk provided the storage medium is in a condition to receive data; otherwise, an alarm message shall be generated.

The Contractor shall furnish all consumables (optical disks, CD-ROMs, DVDs, etc.) required for long-term data storage for the duration specified in Section 3A.2.1.A.

3A.2.1.10 System Equipment. The equipment shall be provided as specified herein and in Section 3A.2.1.A. The intent of these specifications is that the bidder propose his standard system to meet the requirements. If the bidder's standard equipment is not in accordance with the detailed requirements herein, the proposal shall thoroughly describe any variations or exceptions.

The Contractor's system shall allow all cards or modules to be removed for maintenance while under power without causing damage to the card/module or to the system, or shall allow for power down of one of a redundant pair of modules to allow its removal for maintenance.

All equipment shall be installed in housed in cabinets, consoles or panels furnished by the Contractor.

Nameplates shall be furnished and installed on the exterior of all major equipment, including all operator interface cabinets/consoles, control and electrical panels, and cabinets.

In general, the external nameplates shall be designed as follows:

- Nameplates shall be beveled, laminated white phenolic plastic engraving stock with black core, or beveled, two-ply vinyl white with reverse engraved black fill,
- Nameplates shall be approximately 50 mm by 200 mm, with three lines of 10 mm high text.
- Nameplates that are to be mounted on equipment to be installed in non air-conditioned areas shall be attached with stainless steel panhead screws, rivets, drive screws, or epoxy glue. Nameplates that are to be mounted on equipment to be installed in heated and air-conditioned areas shall be attached with high performance adhesive tape.

The type, size, and other details of the nameplates may vary because of size constraints, and equipment location. During detailed design, the Purchaser will provide nameplate

information that will include the nameplate type, physical size, lettering height, nameplate description, and equipment tag number.

Equipment designation labels shall be furnished and installed on the front and back interior of all cabinets and panels. This provides for equipment designation with doors removed. Internal labels shall also be furnished and installed for all cabinet and panel internal components, including but not limited to, internal devices, modules, and terminal blocks.

Any equipment tagging schemes used by the Contractor for designing and configuring the system (cabinet reference numbers on drawings, equipment references on database lists, etc) shall functionally match the equipment tagging designated by the Purchaser.

3A.2.1.10.1 Communications Networks. The Contractor shall furnish all devices necessary to implement the communications networks design as specified herein. These devices shall be installed in system cabinets, and shall include all communications modules, modems, network hubs, routers, switches, line drivers, receivers and transmitters, protocol converters, fiber optic patch panels and fan out kits, media converters, signal conditioners, prefabricated cables, cable adapters and connectors, and any other communication network components required by the Contractor's design.

3A.2.1.10.1.1 Data Highway Communications Network. The system communications networks shall include a redundant Control Processor to Control Processor data highway communications network. The capability shall be provided for connection of future nodes to the data highway communications network, such as additional Control and Operator Interface Processors, monitors, programming devices, or foreign device interfaces to other systems. The data highway communications network shall be expandable to accept at least 100 percent future additional nodes. The system shall be designed so that new nodes can be added without shutting down the system or causing a loss of control, information display, or alarm information. The data highway communications network shall not be dependent on any master controllers for its operation.

3A.2.1.10.1.2 Operator Interface Communications Network. The system communications networks shall also include an operator interface communications network for data transfer from the data highway communications network to the Operator and Operator/Engineer Interface Processors, monitors, keyboards, and printers.

The operator interface network shall be designed such that a failure of any Operator Interface Processor, or the failure of any part of the operation interface communications network, shall not cause the loss of more monitors than the total number of monitors specified per work station. Each node of the operator interface communications network shall be able to communicate peer-to-peer with the others. The operator interface network shall be designed to allow for expansion.

Prior to shipment the Contractor shall permanently mount all operator interface communications network equipment, not located at the Operator Work Stations, in system electronics cabinets on shelves or racks. Power for the cabinet's internal components shall be internally wired, by the Contractor, from redundant power sources. The Contractor may provide power from redundant internal power supplies, or from redundant surge-suppressing power strips; each fed from a separate source. If power strips are used, the strips shall be to

wired by the Contractor, to terminal blocks for customer furnished power feeds, and to the cabinet's internal components. Redundant network components shall be connected to separate, or redundant, power sources.

If the operator interface communications network is an Ethernet network, it must at a minimum, conform to the following additional requirements:

- Ethernet networks shall, at a minimum, conform to the requirements of IEEE 802.3, 100Base systems. The Contractor shall be fully responsible for the design and implementation of the network. The network design shall be done by a qualified network engineer, with the final design of the network acceptable to the Purchaser.
- Ethernet networks shall provide connectivity to existing plant networks, and shall be compatible with slower equipment that may be connected to the network. The network must be designed such that these connections to external networks shall not degrade the performance of the DCS Ethernet networks.
- All Ethernet based communication networks shall use unshielded twisted pair (UTP) and/or fiber-optic cable. Twisted pair cable networks shall conform with ISO 8802.3 10(100)BASE-T(TX) Category 5e or newer requirements. Fiber-optic cable networks shall conform with ISO 10(100)BASE-FL(FX) or newer requirements.
- Maximum network segment lengths shall conform to the IEEE 802.3 standard requirements.
- Bit-shift delays and interframe gap shrinkages shall conform to IEEE 802.3 guidelines, particularly for complex multi-segment system designs.
- Ethernet networks shall use a port switched configuration with redundant network hardware, and shall minimize the use of non-switching hubs.
- Switches shall be auto-sensing with remote management capability.
- Switch ports shall be capable of both 10 megabits per second (Mbsp) and 100 Mbsp operation, full and half duplex.
- Switches shall include a spanning tree algorithm compatible with IEEE 802.1D to protect against inappropriate network loops.
- Rack mounted equipment shall be supplied where ever possible.

3A.2.1.10.1.3 I/O Communications Network. Local and, if required by system design, remote I/O communications networks for data transfer from the Control Processors to the I/O, shall be included in the system communications networks.

3A.2.1.10.2 Control Processors. All Control and Data Acquisition Functions shall be implemented by modularized distributed Control Processors without the use of any disk drives. All Control Processor modules shall be of the manufacturer's standard design and shall be identical in terms of their physical hardware, to the greatest extent possible, to minimize the number of types of Control Processor modules.

Control Processors shall be self-booting and shall be designed to automatically receive configuration information from the system server via the data highway communications network when initially installed or after a power loss resulting in loss of configuration memory. Each Control Processor shall contain a complete library of control function algorithms stored in nonvolatile memory. Each Control Processor shall utilize these algorithms along with its unique configuration information to implement its process control functions. Control Processors shall be designed for multi-segment operation, such that a

minimum of five program segments can run independently at individual User selectable scan rates.

Control Processors specified to have redundancy shall have a pair of completely duplicate Control Processors, connected separately to the data highway communications network. One member of the Control Processor pair shall be active; the other member of the pair shall be operating in a continually updated, hot standby mode. In the event of a failure in the active member, all functions shall immediately be assumed and conducted by the standby member, which shall then function as the active Control Processor. Redundant Control Processors shall utilize a state replication model, such that the standby Control Processor begins executing at exactly the same point in the program scan cycle as the primary Control Processor was when it failed. When the failed Control Processor is replaced or reactivated, it shall automatically assume the function of the hot standby Control Processor. The assignment of the active and hot standby mode for the pair shall be User selectable, with a bumpless method for switching operating modes between the pair without interrupting system control functions.

Each Control Processor shall be assigned a specific Control and/or Data Acquisition Function. Assignment of functions to the Control Processors shall be acceptable to the Purchaser.

3A.2.1.10.3 System Input and Output Equipment. Input and output equipment shall be furnished as required by Section 3A.2.1.A. Field powered inputs and outputs (I/O) shall be electrically isolated from each other (no common hot, neutral, or return connections) and from all cabinet wiring. All I/O modules shall meet the requirements of ANSI Standard C37.90.1-1989 for surge withstand capability. All required peripheral equipment for signal conditioning, impedance matching, balancing, and other similar functions shall be furnished and installed by the Contractor.

The Contractor shall fully configure, prior to system shipment, all I/O modules to match the I/O type as specified in the I/O database. This hardware configuration shall include, but not be limited to, the installation of all dip shunts, dip switches, and jumpers.

Loop cards, where multiple I/O types such as AI, AO, DI, DO are combined on a single I/O module, are not acceptable and shall not be used.

The I/O modules shall be connected directly to the individual Control Processors so that a failure of the data highway communications network will not affect the availability of the I/O necessary for execution of the control functions of the system.

All I/O modules shall include User configurable fail-safe mode selection to allow individual selection of module response to Control Processor data highway communications network or I/O communication network failures.

I/O rack slots shall accept either input modules or output modules of any type as required. I/O modules shall be replaceable without removing any field wiring. Maximum I/O module point loading shall be as defined in Section 3A.2.1.A. If any of the Contractor's I/O modules exceed these maximums, the points in excess of the maximums shall be considered unusable.

Digital I/O interrogation power switching shall be as defined in Section 3A.2.1.A.

All inputs and outputs required by the Contractor to implement the specified scope of the system shall be provided in addition to the quantity of inputs and outputs specified under I/O Requirements in Section 3A.2.1.A. These inputs and outputs shall include, but not be limited to, the following:

- Power supply voltage checks.
- Power supply failure alarms.
- Cabinet cooling fan failure alarms.
- Cabinet temperatures.
- Cabinet temperature alarms.

3A.2.1.10.3.1 Digital Inputs. Digital input equipment shall be used to monitor the status of field contacts or voltage sources representing control or information intelligence in the form of digital (on, off; "1," "0") logic. The Contractor's Digital inputs and SOE Digital inputs must each meet the following requirements.

Sensing circuitry for digital inputs shall have high input impedance. Individual status lights shall be provided for each input on all digital input modules. Status lights shall monitor the logic side of the input rather than the field side.

The system shall allow the User to individually select the input interrogation voltage source for each digital input on each card. The available interrogation voltage sources shall include the following as a minimum:

- DCS internal system I/O interrogation power (contact sensing).
- Purchaser-supplied external contact voltage (voltage monitoring).
- Purchaser-supplied Contractor-routed power (contact sensing). Routed power is internally wired in the I/O cabinets by the Contractor as specified in Article 3A.2.1.11.2.

Section 3A.2.1.A defines the requirements for each location.

The field circuit cables used for digital inputs will be unshielded control cable and will be routed in cable trays with other 480 volt ac, 240 volt ac, and 250 volt dc circuits. The digital input cards for use with ac interrogation voltage shall be designed such that they are impervious to the effects of capacitive coupling in the field cables to the point that they allow the input module circuitry to effectively differentiate between the closed and open states of the field contact. The use of external pulldown resistors is not allowed.

Digital inputs shall be provided with contact bounce filtering. The filter shall delay digital inputs to protect against input device bounce and electrical noise on input lines.

3A.2.1.10.3.2 Digital Outputs. Digital output equipment shall be used to provide control intelligence to field devices requiring digital (on, off; "1," "0") commands.

Individual status lights shall be provided for each output on all digital output modules. Status lights shall monitor the field side of the output rather than the logic side. Where individually fused outputs are provided, each output shall be provided with a blown fuse indicator.

Digital output module contacts shall meet the load, type, and quantity requirements defined in Section 3A.2.1.A. If the Contractor's digital output module contacts are unable to switch or continuously carry the loads, or do not meet the minimum contact arrangement requirements, the Contractor shall furnish and install within the DCS cabinets interposing relays with contacts designed to meet the defined requirements. Interposing relay coils shall be powered by the DCS outputs. Interposing relay contacts shall be factory wired to terminal blocks in the DCS I/O equipment cabinets or termination cabinets.

Where fail-safe digital outputs are required to safely shut down equipment or to enable backup control of equipment on a DCS failure, the Contractor shall provide the necessary fail-safe logic relays in his I/O cabinets. The relays provided shall meet the load, type, and quantity requirements defined in Section 3A.2.1.A. Relay contacts shall be factory wired to terminal blocks in the DCS I/O equipment or termination cabinets.

Digital outputs may be used to switch inductive loads and these inductive loads may be interrupted by external contacts. All required transient protection shall be internal to the output module. Triac switches are not acceptable.

The system shall allow User to individually select the output power source for each digital output on each card. The available power sources shall include the following as a minimum:

- DCS internal system I/O power (wetted contact).
- Purchaser-supplied external contact voltage (dry contact).
- Purchaser-supplied Contractor-routed power (wetted contact). Routed power is internally wired in the I/O cabinets by the Contractor as specified in Article 3A.2.1.11.2.

Section 3A.2.1.A defines the requirements for each location.

3A.2.1.10.3.3 Analog Inputs. The input of all analog-to-digital converters shall have a minimum accuracy and resolution of ±0.15 percent of full scale.

Analog input modules shall accept all ranges of inputs listed in Section 3A.2.1.A from thermocouples, RTDs, analog transmitters, slide wires or any dc current or voltage signal from a process transducer. If the Contractor's I/O modules cannot accept a signal type and range listed in the I/O list, the Contractor shall furnish, install, and wire in his I/O cabinet a signal conditioner with the proper input and output ranges to convert the field signal to a level acceptable to the Contractor's system. Precision resistors shall be furnished by the Contractor as an integral part of the analog input system.

An input filter shall be used to attenuate any high frequency noise components which may be coupled with the signal. Low pass filtering shall cut off at a maximum of 2 hertz. Common mode noise rejection shall be a minimum of 110 dB at 50 hertz. Normal mode noise rejection shall be not less than 60 dB at 50 hertz. Series mode signal-to-noise rejection ratio shall be not less than 1,000 to one for thermocouples and other low level signals.

The removal of analog input cards for service or maintenance shall not affect the continuity of current type input field circuits.

Thermocouple input cards shall be designed so that different thermocouple types can be mixed on each card and shall be designed to accept field grounded thermocouple circuits.

The system shall allow the User to individually select the transmitter power source for each analog input on each analog input module. The available power sources shall include DCS internal system I/O power (system powered), and transmitter supplied power (field powered). The analog input modules shall provide electrical isolation between field powered and system powered inputs. The Contractor may furnish the specified quantity of analog input modules without isolation for use with system powered inputs only and designed for 4 to 20 mA signal range for use with large quantities of 2 wire transmitters when specified in Section 3A.2.1.A. Transmitter circuits shall be individually fused or current limited. If fuses are used, they shall be located in the I/O cabinets. Bridge circuits and power supplies required for resistance temperature detectors and slide wires shall be provided in the I/O cabinets.

3A.2.1.10.3.4 Analog Outputs. Analog output amplifiers shall have drift characteristics which meet the system accuracy guarantees. The output of all digital-to-analog converters shall have an accuracy and resolution of ±0.25 percent of full scale of the signal. Analog outputs shall produce 4 to 20 mA dc current loops capable of driving 750 ohm loads.

Analog outputs shall be used for control (to position valves, dampers, etc.) and for information (to drive indicators, recorders, etc.). I/O module point loading for analog outputs of each of these two functions shall be as defined in Section 3A.2.1.A.

3A.2.1.10.3.5 Pulse Inputs. Pulse input cards shall receive pulse inputs in the form of contact closures occurring at a rate which will not exceed 2,000 pulses per second. The pulses shall be those typically output by watt-hour measuring equipment.

3A.2.1.10.3.6 Foreign Device Interfaces. The Contractor shall provide all hardware and drivers to communicate with Purchaser-furnished foreign devices, such as personal computers and programmable logic controllers (PLC) as defined in Section 3A.2.1.A.

The Contractor's design and implementation responsibilities shall include but not be limited to verifying the communication protocols, determining the volume and quantity of information to be exchanged via the interfaces (I/O quantities in Section 3A.2.1.A are general estimates only), all DCS configuration to allow the DCS to provide and/or access the interfaced information, and to ensure the systems are communicating properly upon implementation.

The communications medium shall be twisted shielded copper conductors or fiber-optic for indoor locations and those areas not subjected to induced signal noise. For communications networks routed outdoors or in areas where induced signal noise is probable, fiber-optic cable shall be provided.

The Contractor shall furnish all devices necessary to implement the foreign device interfaces specified herein. These devices shall be installed in system cabinets, and may include, but not be limited to, communications modules, modems, hubs, routers, switches, protocol converters, fiber optic patch panels, media converters, signal conditioners, and prefabricated cables.

The Contractor shall furnish line drivers or short-haul modems for both ends of all interfaces that, in Section 3A.2.1.A, have specified cable lengths of longer than 15 meters for all RS-232 interfaces, or longer than 1200 meters for all RS-422 and RS-485 interfaces. The Contractor shall also furnish line drivers or short-haul modems for both ends where the Contractor's equipment design recommends their use for isolation or other requirements. For all Allen-Bradley Data Highway Plus interfaces, the Contractor shall furnish an Allen-Bradley 1770-KF2B DH+ to RS-232/RS-422 interface module. All line drivers, modems, and KF interface modules for the DCS end of the interfaces shall be installed and have both power and communications wired in one of the DCS cabinets by the Contractor.

All Ethernet based communication networks shall use unshielded twisted pair (UTP), shielded twisted pair (STP), coaxial cable, and/or fiber-optic cable. The twisted pair cable bus shall conform with ISO 8802.3 10(100)BASE-T(TX) Category 5e requirements. The coaxial cable bus shall conform with ISO 8802.3 10(100)BASE-5 requirements. The fiber-optic cable bus shall conform with ISO 10(100)BASE-FL(FX) requirements. Ethernet communications networks shall include all necessary hubs, switches, connectors, patch panels, fan out kits, taps, repeaters, cables, terminators, and other components required for a complete communications system.

The interfaces shall permit the data generated in the foreign devices to be used in any process controller, displayed on any Operator Work Station, or used in any report. The interface shall also allow the configuration of push buttons and control stations on the DCS Operator Work Station displays that can be used to start and stop motors, open or close valves, etc., that are controlled by the programmable logic controllers.

3A.2.1.10.4 Operator Work Stations. Operator Work Stations shall be furnished as specified in Section 3A.2.1.A. Each Operator Work Station shall consist of monitor(s), Operator keyboard(s), mouse(s)/trackball(s), and supporting electronics (Operator Interface Processors, display generators, data highway communications network equipment, etc.).

Each Operator Work Station shall be designed for interactive Operator capability for the following functions, including but not limited to:

- Provide point and click actions required for the Operator to interact with the system, such as cursor positioning, display selection, menu selection, menu item selection, etc.
- Select and execute process and equipment control functions, including but not limited to, start, stop, raise, lower, auto, manual, alarm acknowledge, etc.
- Select any display to any monitor, and select display combinations of process control displays, trend displays, group displays, and bar chart displays on any monitor.
- Select points and assign parameters for trend displays, group displays, and bar chart displays.
- Assign points, collection periods, and print periods for reports and data storage functions.
- Enter numerical values and alphabetic characters.
- Copy any display to color hard copy (paper).

The operation interface communications network and each Operator Work Station shall be designed to include, at a minimum, the following physical characteristics:

- The operations interface communications network shall be designed such that all Operator Work Stations have physical and logical redundant data paths to the data highway communications network.
- Each work station shall include key lock and/or password protection to restrict access to critical functions to be performed by authorized personnel only. These functions will be approved by the Purchaser during the design phase of the project.
- Each work station shall include, at a minimum, 16 bit, CD quality audio capabilities, including speakers.
- Work station electronics and all other equipment with a noise level of 55 dBA or greater at 1 meter shall be installed in system cabinets to be located in the same room as the system electronics cabinets.
- All monitors shall be designed to minimize reflection and glare from external light sources.
- All monitors shall have a maximum dot pitch of 0.28 mm and a resolution of at least 1280 by 1024 pixels with a minimum refresh rate of 75 hertz.
- All monitors of like size shall be physically interchangeable.
- Controls shall be provided on the front, side, or bottom of each monitor for contrast, brightness, and sharpness as a minimum. Microprocessor based on-screen-display shall also be provided for H-center, H-size, V-center, V-size, RGB control, and color temperature as a minimum.
- Monitor radiation emissions shall comply with existing industry standard requirements.
- High quality monitors, with convergence at the edges of the screen equal to that at the center, shall be provided, since messages are written to the extreme left and right sides of the screens,
- Operator keyboards shall be membrane type with modular plug-in construction to allow quick replacement.

In addition to the Operator Work Stations specified above, all additional work stations, such as domain controllers, configuration servers, etc. required by the Contractor's design to support the DCS operating system, shall be furnished.

3A.2.1.10.5 Engineer/Operator Work Stations. Engineer/Operator Work Stations shall be furnished as specified in Section 3A.2.1.A. Each Engineer/Operator Work Station shall consist of monitor, standard keyboard, mouse/trackball, and supporting electronics (Operator Interface Processors, display generators, data highway communications network equipment, etc.).

The Engineer/Operator Work Station shall be designed to include, at a minimum, the following physical characteristics:

- Each work station shall be able to monitor, view, create, modify, debug and document any control or information display, program, database, logic, or other function within the DCS.
- Each work station shall include the capability to provide both on-line and off-line development of control and data acquisition programs and control and information display development.
- Each work station shall include key lock and/or password protection to ensure that unauthorized program entry and alteration cannot occur.

- Each work station shall include a hard disk for program and display storage, and a floppy disk and CD/RW-ROM drive for program backup, loading, and storage.

The Engineer/Operator Work Station shall provide all the functions of a full-featured Operator Work Station. If the Contractor's engineer work station cannot provide all of the functions of a full-featured Operator Work Station, the Contractor shall provide an additional Operator Work Station to be installed with each engineer station to provide these functions.

3A.2.1.10.6 Supervisory Work Stations. Supervisory work stations shall be furnished as specified in Section 3A.2.1.A. Each supervisor's work station shall be a fully featured and functioning Operator Work Station with the exception that all control functions are disabled.

3A.2.1.10.7 Printers. All printers shall be equipped with all control and interface devices necessary to operate in conjunction with the Operator and the Engineer/Operator Work Stations. Each printer shall be mounted on an independent pedestal. It shall not be necessary to move the pedestal, or remove doors to change paper. The Contractor shall supply all consumables, such as ribbons, ink cartridges, and paper required for the duration specified in Section 3A.2.1.A for each printer supplied.

All printers shall be network-style Ethernet compatible printers. Contractor shall furnish any required print servers necessary to connect the printers to the network.

General use dot matrix printers shall be furnished as specified in Section 3A.2.1.A. All general use dot matrix printers shall be color printers. The printers shall print, at a minimum, 120 characters per second bidirectional, and shall accommodate A4 and A3 fanfold paper with a total available line length of 132 characters.

General use laser printers shall be furnished as specified in Section 3A.2.1.A. All general use laser printers shall, at a minimum, include 8 Mbytes of memory, and print 20 pages per minute with a minimum print resolution on 1200 dpi. Each printer shall accommodate A4 and A3 paper, and shall have two paper trays, each sized for a minimum of 250 sheets.

Display/screen printers shall be furnished as specified in Section 3A.2.1.A. All display/screen printers shall use color ink jet or other color technology acceptable to the Purchaser, and shall be capable of printing a hard copy of the current display on any monitor within the DCS on Operator demand. The printers shall, at a minimum, include 32 Mbytes of memory, and print 20 color pages per minute with a minimum print resolution on 1200 dpi. Each printer shall accommodate A4 and A3 paper, and shall have two paper trays, each sized for a minimum of 100 sheets.

Printer drivers for each printer and for all available types of paper shall be loaded onto each Operator and Engineer/Operator Work Station at the Contractor's factory.

3A.2.1.10.8 Operator Control Console. If required by Section 3A.2.1.A, the Contractor-furnished Operator control console shall be a sectionalized structure to permit placement at the project site through a 1.5 meter wide by 2 meter high doorway. The console shall consist of sections for mounting work station monitors and keyboards, benchboard sections, and wedge sections.

The benchboard and wedge sections shall have a surface that is within 30 degrees of vertical to allow installation of hard-wired devices such as, subpanels, switches, indicators, and other miscellaneous control devices. The recommended size for the surface on the benchboard section is 0.5 meter by 0.5 meter, or similar, to match the Contractor's work station mounting sections. The Contractor shall provide cutouts and mounting facilities for all devices to be installed on the Operator control console and shall furnish, install, and wire pushbuttons and/or other devices as required by Section 3A.2.1.A. The Contractor shall provide information on the size and mounting surfaces available for the benchboard and wedge sections.

The horizontal tabletop support structure shall be designed as an open structure on the front to provide knee space for personnel seated in front of the work station monitors. Cable openings shall be provided in the tabletop surface for wiring between the monitors and keyboards and openings in the control room floor. Cable openings shall be provided with plastic sleeves to protect cables from abrasion on sharp corners. Wire channel shall be provided by the Contractor to permit wiring to be routed from these cable openings to the floor openings. This wire channel shall be built into the console support structure.

The Contractor shall furnish and install plug receptacles in the console to provide power for the monitors, keyboards, and printers located on or near the console. Plug receptacles shall be wired to terminal blocks for connection of the Purchaser's incoming power circuits.

It is the intent of these specifications that the bidder propose his standard console design. If the bidder's standard is not in accordance with the requirements of this section, the proposal shall thoroughly describe any variations or exceptions.

3A.2.1.10.9 System Cabinets. This section describes the cabinets required as part of this specification. Cabinets will consist of system electronics cabinets, I/O equipment cabinets, Remote I/O equipment cabinets, and interposing termination cabinets as required by Section 3A.2.1.A.

When determined by detailed design, cabinets shall be factory assembled in bay sections to minimize field wiring across shipping splits; however, the maximum size for each section shall be as defined in Section 3A.2.1.A. The Contractor shall provide all plug-in connectors, disconnects, and wiring pigtails required to cross shipping splits.

Cabinet design (environmental rating, door and cable access, and structure) shall be as defined by Section 3A.2.1.A. All cabinets shall be provided with key locks. All locks shall be keyed alike. All cabinets located in areas that are space conditioned shall be provided with removable doors. All cabinets located in areas that are not space-conditioned shall provide all cooling by convection through the cabinet sides. No louvers or forced air ventilation will be permitted.

Interconnecting wiring shall be provided between all electrical devices mounted in the cabinets and enclosures and between the devices and terminal blocks if the devices are to be connected to equipment outside the cabinets or enclosures.

All of the circuits in the cabinets shall be isolated from the cabinet structure, including the cable shields. The cabinet structure will be grounded to the building steel ground grid. The Contractor shall provide wiring to connect all terminals and equipment requiring ground connection to the isolated cabinet ground bus.

Terminal blocks for power, communication, and utility circuits shall be grouped in one section of the cabinet.

Where system cabinet heating or cooling is required based on the specified equipment service conditions and the Contractors equipment environmental constraints, redundant electrical space heaters or air conditioners shall be provided. This equipment shall include thermostats, fuse blocks with fuses or circuit breakers, and terminal blocks for the Purchaser's redundant power feeds.

Air conditioning equipment shall be suitable to maintain cabinet temperature conditions under full solar radiation exposure with no shading or other similar protections from sunlight. Space heater capacity shall be as required to maintain the enclosure internal temperature above the dew point under the specified service conditions. Normal use of space heaters shall not change or discolor any painted surface, and space heater sheaths shall be of a corrosion-resistant, nonoxidizing material. The air conditioning equipment, space heaters, thermostat, and circuit disconnect device shall not interfere with normal cable entrance into the enclosure.

Alarms shall be generated at the operator consoles for failure of HVAC equipment, transfer to backup/redundant equipment, and other similar events. Alarms shall be hardwired inputs to the DCS modules at the respective cabinet locations. Alarm and display development I/O shall be provided by the Contractor and approved by the Purchaser. The I/O required for these monitor inputs is not included in the specified I/O quantities.

3A.2.1.10.9.1 System Electronics Cabinets. System electronics cabinets shall house the system Control Processors and communications equipment and power supplies. In addition, Operator Work Station and miscellaneous electronics equipment shall be housed in the system electronics cabinets.

3A.2.1.10.9.2 I/O Equipment Cabinets. I/O equipment cabinets shall house the system input and output racks, modules, and associated communication equipment and power supplies. If I/O interposing termination cabinets are not required, these cabinets shall also house the I/O terminations.

3A.2.1.10.9.3 Remote I/O Equipment Cabinets. Remote I/O equipment cabinets shall house the system input and output racks, modules, and associated communication equipment and power supplies. If Remote I/O interposing termination cabinets are not required, these cabinets shall also house the Remote I/O terminations.

Electric cabinet strip heaters with thermostatic control shall be provided in each cabinet for prevention of condensation. The heaters shall be located so that heat from the heater does not cause overheating of any internally mounted components. The heaters shall be rated double the applied voltage. Protective guards shall be provided to prevent accidental contact with the heaters.

3A.2.1.10.9.4 Interposing Termination Cabinets. Interposing I/O and Remote I/O termination cabinets, if required, shall serve as the interface between the DCS I/O card and the field input and output devices. The interposing termination cabinets shall be designed to allow optimum arrangement of the I/O cables and cable conductors and shall have an environmental rating equal to, and door access the same as, I/O equipment cabinets in the same area.

The Contractor shall furnish all prefabricated interconnecting cables between the interposing termination cabinets and the I/O equipment cabinets. The interconnecting cables shall be provided with plug and socket connectors on one end to allow the termination cabinets to be shipped early, if required, and to provide for quick installation at the jobsite.

3A.2.1.10.9.5 I/O Termination Requirements. Cabinets supplied for termination of field I/O shall meet the following additional requirements.

Termination cabinets shall be designed to provide an individual terminal for each signal lead of each input and output point. Card edge I/O terminations will not be allowed. Grouped and shared common and return signal terminations shall not be provided. Cable shield terminations shall be provided adjacent to the circuit terminals.

Termination cabinets that are separate from the I/O modules and contain thermocouple circuits shall be provided with means for cold junctions compensation.

2.1.10.9.6 Fiber Optic Patch Panels. If fiber optic cables are used for data highway or network connections, the Contractor shall provide fiber optic patch panels and patch cords to connect fiber optic cables to the DCS equipment. Patch panels shall be furnished with connectors for all fibers in multi-fiber bundle cables, whether all individual fibers are used or not. Patch panel design and specification shall be the responsibility of the Contractor, and shall be reviewed with the Purchaser for approval. Patch panels shall be mounted inside or outside DCS cabinets as specified in Section 3A.2.1.A. Panels within DCS cabinets shall have patch cords factory installed and connected to internal components. Panels outside DCS cabinets shall be suitably rated for the equipment environment specified, and shall be furnished with patch cords for connecting to the DCS cabinets. Combined patch panels may be furnished for bayed groups of DCS cabinets.

3A.2.1.10.10 System Remote Interfaces.

3A.2.1.10.10.1 Remote Diagnostic Interface. If required by Section 3A.2.1.A, the Contractor shall provide the hardware and software necessary to allow the Contractor's technical service center to interface with the system in order to perform remote diagnostics in support. The interface shall be implemented through a high security modem link that includes features such as password protection and callback access.

The interface shall allow the Contractor's service personnel to perform remote diagnostics on all system modules and communications paths. The interface shall also allow remote system administration services including, but not limited to, monitoring of module, system, and data highway communications network performance to aid in maintaining peak system performance; preventive maintenance; and predictive maintenance functions. The interface

shall also allow the Contractor's technical service personnel to provide application development and debugging assistance to the Purchaser's personnel.

3A.2.1.10.10.2 Remote Web Server Interface. If required by Section 3A.2.1.A, the Contractor shall provide the hardware and software necessary to allow remote access of real-time process information by any Intranet or Internet web browser on any connected PC. The Contractor shall also provide remote access client licenses, if required, in the quantity specified in Section 3A.2.1.A.

The interface shall allow client PCs with web browsers to dynamically display process values and data, displays, trends, and reports. The remote web server interface shall also, at a minimum provide the following functionality:

- Connectivity through company Intranet connections, dial-up connections, and standard Internet connections.
- Read-only access to all process information of the DCS, including access to the point database information and live and historical trend data.
- Ability to convert DCS graphics to web based objects to allow graphics access from standard web browsers.

3A.2.1.10.11 Time Synchronization Equipment. If required by Section 3A.2.1.A, the DCS shall synchronize the system clock to within 0.001 second of a time signal received from a Contractor-furnished and installed GPS synchronized timing receiver. The system shall use an IRIG-B signal to synchronize the DCS with coordinated universal time (UTC). All hardware, software, and cables shall be provided.

3A.2.1.10.12 Interconnecting Cables. If required by Section 3A.2.1.A, the Contractor shall provide all interconnecting cables, such as, data highway communications network, remote I/O communications network, and ethernet, (metallic or optical fiber) required for connections between the various physically separated items in his scope of supply. Cable quantities shall be as specified in Section 3A.2.1.A. Metallic and fiber optic cable using plug-in connectors shall be completely fabricated and tested by the Contractor and shall be used to interconnect the system during the factory tests. Metallic cables using terminal block connections shall be provided as bulk lots of cable, on reels.

3A.2.1.10.13 Installation and Maintenance Equipment. The Contractor shall furnish two sets of all special tools and equipment used in installing, modifying, and maintaining the DCS equipment. All tools and equipment will be used during system checkout and startup, and will be the property of the Purchaser.

Installation and modification tools shall include, at a minimum, all tools necessary to duplicate the interconnection method used to fabricate assemblies, such as wire wrap tools; tools required to crimp, insert, or remove pins from any connector supplied; and all tools required to insert or remove EPROMs, dip shunts, or any other removable circuit board components.

In addition, maintenance tools shall be provided to supplement and monitor hardware diagnostic test programs. The maintenance equipment shall include all devices required to

perform the hardware diagnostic testing in a manual or off-line mode. This shall include, if required by the system, each type of extender board needed to access circuit boards or cards.

3A.2.1.11 System Power and Grounding.

3A.2.1.11.1 Power Sources for System Use. The Purchaser will provide a separately protected redundant pair of power feeds 24 Volts DC (min 19.5 Volts DC, max 30 Volts DC) to each system electronics cabinet, each I/O equipment cabinet, each remote I/O equipment cabinet, and to each other cabinet containing equipment utilizing redundant internal power supplies. Redundant power conversion equipment shall be supplied by the Contractor and the Contractor's system shall be fully functional if either feed of the pair is energized. The Purchaser's power sources used for the primary and secondary power feeds will be as described in Section 3A.2.1.A.

Power feeds will also be supplied by the Purchaser to the I/O equipment cabinets for field powered digital inputs and outputs.

The Contractor's system shall be arranged so that no more than 30 amperes shall be required from any one of the Purchaser's power feeds.

Other system devices such as displays, large screens, servers, peripheral devices (printers, etc.) furnished as part of the Contractor's system will be supplied from the Purchaser's inverters Each peripheral device shall be furnished with a 2 meter power cord and plug set for connection to the Purchaser's receptacles.

Equipment provided by the Contractor shall operate with the Purchaser's inverter system correctly throughout the voltage operating ranges, transients, and the transfer times as follows:

- Inverter:
  - Steady-state Voltage - 220 Volts AC +/-2% (Nominal).
  - Frequency - 50 Hz +/-0.5% (Normally Synchronized to Line).
  - Harmonic Distortion - 5% Voltage Maximum.
- Static Switch:
  - Transfer Time - 50 cycles (10 MS).
  - Deviation of Inverter to Initiate Transfer - +/-10% Nominal Voltage.
  - Maximum Transient Following Transfer - 75% Voltage for 0.5 cycles, 90% Voltage Thereafter.
- Battery:
  - Nominal Voltage - 220 Volts DC.
  - Maximum Voltage - 245 Volts DC.
  - Minimum Voltage - 190 Volts DC.

If the Contractor's equipment requires isolation from the specified Purchaser's power source(s), the Contractor shall furnish all required power supply isolation/conditioning transformers.

3A.2.1.11.2 Power Distribution. The Contractor's internal power distribution system shall be arranged as described herein.

Each cabinet or item of equipment furnished by the Contractor shall be provided with fuse blocks or circuit breakers, which shall be the point of interface to the Purchaser's power sources. All power and transmitter circuits from the Contractor's equipment to any remotely installed item, whether provided by the Contractor or not, shall be individually fused and powered from within the Contractor's cabinet. Fuses/breakers shall be provided by the Contractor and mounted in a central location providing convenient access for replacement. Fuse rating selection shall place more emphasis on continuity of service within ampacity rating of the power circuits than on minimization of overcurrent damage to the equipment served by the fuse. The proper coordination of branch circuit protective devices shall be the Contractor's responsibility. A fault on a single branch circuit will disable only that circuit; it shall not cause the failure or tripping of any protecting devices in the Purchaser's power sources feeding the DCS.

The Contractor's equipment shall not parallel any power feed with any other power feed without protection acceptable to the Purchaser. Make-before-break transfer switches between ac sources will not be permitted.

The Contractor's equipment shall impose no grounds on any ac power source unless specifically permitted by the Purchaser. If ground connections are required by design of the Contractor's equipment, the Contractor shall provide isolation transformers to prevent transmitting these grounds to any ac power source provided by the Purchaser. The Purchaser's ac power sources will be equipped with neutral grounding at the source. If the Contractor's system requires source ground isolation, the Contractor shall provide the required isolation transformers.

The Contractor's equipment shall impose no grounds on any dc power source. All dc I/O interrogation power sources supplied by the Contractor shall be ungrounded.

3A.2.1.11.3 System Power Supplies. The Contractor shall provide and install within his systems all equipment required to transform, regulate, condition, isolate, and rectify the Purchaser's power sources for use by the system.

In addition to the Contractor's equipment, the Purchaser's primary and secondary power sources will supply other electronic loads. The Contractor shall include any filtering equipment necessary to ensure that any spikes or harmonic distortions produced by the other equipment supplied from the Purchaser's power system will not affect the operation of the Contractor's system. Any spikes or harmonic distortions produced by the Contractor's system shall not affect the operation of the Purchaser's power system or other equipment.

All power supplies shall be provided in a configuration so that the Contractor's system shall remain fully functional if any one power supply fails. The intent of this requirement is that no single failure of power supply equipment or the restoration of the failure shall degrade or interrupt the normal functioning of any part of the Contractor's system including control and Data Acquisition Function processing, I/O network communication, and data highway network communication, and I/O transmitter and interrogation power. Each power supply shall be provided with a trouble indicating light and a digital contact wired to a DCS input

that indicate loss of power supply output. The I/O required for these power supply monitor inputs is not included in the specified I/O quantities.

The Contractor shall provide power supplies and/or cabinet internal wiring required to energize system powered digital inputs (48 Volts DC) and outputs (24 Volts DC) as specified in Section 3A.2.1.A.

The Contractor shall provide power supplies to energize all system powered 2 wire transmitter inputs and all RTD inputs.

3A.2.1.11.4 Battery Backup. The use of batteries shall be minimized. Where battery backup of random access memory is required, the batteries shall be sized to retain this memory for a minimum of 48 hours. All batteries shall be replaceable without any interruption of the function for which the battery provides backup.

3A.2.1.11.5 System Effects on Power Sources. The Contractor's systems shall be specifically designed to strictly limit any effects fed back from systems into the power source wiring. The power supply inputs shall have a linear curve for consumed current versus voltage from 10 to 100 percent load. Power supplies which create reflected current harmonics shall have input filters to limit the total harmonic distortion to less than 2 percent, and a wave form crest factor ratio of peak to rms current that does not exceed 3.

3A.2.1.11.6 System Grounding. The Contractor's electrical, system, or logic ground shall be designed for grounding to the station ground mat at a single connection point. The Purchaser shall provide a single point ground connection location. The Contractor shall provide an insulated cable from his system cabinets to the designated ground point location. The insulated ground cables will be connected to an insulated copper grounding busbar which shall be provided by the Contractor in each cabinet.

The system cabinets shall be equipped to accept the insulated ground cables, which at this point will be isolated from the building ground. Any internal component grounds or commons shall be connected to the system ground, which shall be kept isolated from the building ground.

Any required electrical ground or common from components not mounted in the system cabinets shall be brought to a terminal block connection within that component. This terminal block connection shall be located with the other terminals within the component and shall be available for connection through the shield of the field wiring to the system ground bus within the associated system cabinet. Isolation between building ground and system ground shall be inherent in the component design.

The Contractor shall attach safety grounds from each cabinet structure to Purchaser designated building ground locations.

At least 600 volt isolation shall be provided between the electrical, system, or logic grounding busbar and cabinet or building ground for all system components.

When shielded terminations are required in cabinets furnished under these specifications, suitable terminals and supports shall be furnished adjacent to input terminals. Cabinet wiring

by the Contractor shall include connection of the shield terminals to the grounding busbar. The Contractor's shields shall be provided with insulating sleeves to prevent contact of the shields with the metallic structure.

The Contractor shall provide connectors in each cabinet for connection of the system ground and the safety ground. The connectors shall be sized to allow connection of 2 AWG field ground conductors.

3A.2.1.12 Software. A complete set of software program packages shall be provided to implement the functions of the DCS. The Contractor shall be responsible for developing, debugging, and testing all software provided with the DCS.

The Contractor shall grant to the Purchaser and/or end-user licenses to use all software provided with the DCS for monitoring and control of the plant systems and equipment that constitute the project. The license shall include the right to make backup copies of all software provided by the Contractor. The license fees shall be included in the DCS price.

The DCS shall include the following major software components:

- Operating system software programs to provide all Control and Data Acquisition Functions.
- Application builder tool programs for development and modification of control and data acquisition programs.
- Application builder tool programs for development and modification of control and information displays.
- Application builder tool programs for development and modification of the system database.
- Application builder tool programs for development and modification of performance calculations and other specialized data manipulation.
- Application builder tool programs for development and modification of reports.
- Application software for control and information.
- System database for identification of all process (I/O) and calculated variables (points) and for definition of the system attributes associated with each point.
- Diagnostic programs to perform on-line testing functions for system hardware and software.
- Custom and third-party application programs as defined in Section 3A.2.1.A.

3A.2.1.12.1 System Operating Software. The DCS operating system software shall conform to the following criteria.

3A.2.1.12.1.1 Communications Networks. The DCS shall include a distributed data highway communications network operating system designed for mission critical process control applications requiring real-time data transmission without loss, degradation, or delay, even during plant upsets. The system shall be designed to ensure the reliability, security, and performance of the data highway communications network. The use of current off-the-shelf technology and protocols for the data highway communications network is encouraged. The network software shall support fault-tolerant communications including network management and diagnostics, fault detection, and fault recovery and management. The software shall support peer-to-peer communication between all nodes. The system shall calculate and

display data highway communications network loading, free time, and communication failures and retries. The system software shall be designed to allow the data highway communications network to be easily expanded on-line by the additional new nodes.

3A.2.1.12.1.2 Control Processors. The DCS Control Processors shall include real-time operating system (RTOS) software specifically designed for real-time process control and communications functions. The RTOS shall support multi-tasking and preemptive task scheduling. The RTOS shall allow multiple application areas to execute at separate frequencies. The system shall contain hardware and software security features which prevent incorrect control actions from occurring as a result of hardware malfunctions or software errors. The system shall calculate and display Control Processor loading, free time, and continuos running hours.

The following DCS data shall be saved on a Control Processor reboot shutdown, failure, or power loss. The data shall be automatically restored to active memory on Control Processor restart for use in all programs, calculations, displays, and reports.

- Pulsed input accumulations.
- Running, periodic, hourly, daily, monthly, and weighted averages.
- Periodic, hourly, and daily minimum and maximum values.
- Hourly and daily report totals.
- Status of devices which have been "tagged out".

3A.2.1.12.1.3 Foreign Device Interfaces. The Contractor shall provide all support software, including server and client software, and all drivers to communicate with Purchaser-furnished foreign devices, such as personal computers and programmable logic controllers (PLC) as defined in Section 3A.2.1.A.

The communications system utilized shall be based on the ISO Open Systems Interface (OSI) model to assure connectivity between different systems. The communications system shall be implemented using RS-232, RS-422, RS-485, or Ethernet (10 Mbps, 100 Mbps, or Gigabit) standards for the hardware layer. The communications interface shall be bi-directional, capable of receiving and originating messages over the communication network.

Communications networks utilizing RS-232, RS-422, or RS-485 standards for implementation shall be based on Modbus, Modbus Plus, Allen-Bradley Data Highway Plus, or similar communications protocols. RS-232 communications networks shall communicate at a minimum of 19.2K bits per second. RS-422 and RS-485 communications networks shall communicate at a minimum of 56K bits per second.

All Ethernet based communications networks shall conform to IEEE 802.2 (ISO 8802.2) and IEEE 802.3 (ISO 8802.3). The Ethernet communications network shall communicate at 10 megabits per second or 100 megabits per second, with 100 megabits per second preferred. The network driver shall be selected to match the hardware configuration of the network. As a minimum, the network operating system shall support the TCP/IP communication protocol suite. The system shall support standard real-time data interchange protocols, such as, OPC (OLE for Process Control), Modbus TCP, and NetDDE to allow easy integration of plant data with applications including business, SCADA, HMI, and other custom software packages.

The system shall also support read-only access to plant data from any PC Web browser over the Internet, company Intranet, or dial-up connection.

3A.2.1.12.1.4 Operator and Engineer/Operator Work Stations. The operator and engineer work stations shall utilize a commercially available multitasking operating system, such as, Microsoft Windows NT, Sun Solaris, or OpenVMS. The operating system shall provide the interface to the process through control graphic displays, alarms, trends, and diagnostics.

The operating system shall support standard applications interfaces, such as, OPC, ODBC, and NetDDE, which allow real-time and historical DCS data to be passed to compliant third-party client software packages across the plant LAN/WAN and vice versa. The operating system shall also support single or dual monitors, multiple languages, character sets, and cultural conventions.

In addition, the system operating software shall meet the following criteria:

- The software shall supervise all aspects of software installation processes including checking memory for defects, testing system hardware, and procedures for installing individual programs.
- The software shall reinitialize the system following a memory failure or long-term power failure. The reinitialization software shall contain necessary functions to allow the User to install all operating system and application software onto the system memory with a series of screens displaying guidance messages throughout the entire installation process.
- The system shall include security features designed to limit access to critical information and plant control features to authorized personnel.
- The system shall support standard Microsoft or X-Terminal Windows protocol to allow DCS control and information displays to be accessible and functional on any interconnected Microsoft or X-Terminal Windows compatible remote system.
- The system shall provide a "windows" graphical-user-interface (GUI) using desktop menus and icons for user access to all control, monitoring, and engineering functions.
- The system shall be based on technology which allows multiple windows that can be moved and resized. This resizing must resize, not just crop, the window's display.
- The system shall include software and associated licenses shall be provided to allow, a minimum of, four simultaneous displays to be opened on each Operator Work Station.
- The system shall include soft keypad(s) with a minimum of 32 push buttons designed to allow single stroke access to control and information displays or functions. This soft keypad must be available on each Operator Work Station. Assignment of displays to push buttons shall be software selectable by the User.

3A.2.1.12.2 Application Builder Tools. High level application builder tools shall be provided to create and modify all system configurations including control and data acquisition programs, displays, databases, performance calculations, and reports. The User shall be able to create or make modifications to any system configuration in a conversational mode, using fill-in-the-blank, pulldown menus, or other similar techniques from any Engineer/Operator Work Station. The application builder tools shall be available only in the engineering environment of the system under password or key lock control. The system shall provide facilities for self-documentation of all system configurations.

The Engineer/Operator Work Station and its attendant software shall be self-contained to support all reconfiguration work including downloading functions from the Engineer/Operator Work Station to the Control and Operator Interface Processors with the DCS on-line.

Any system display which is reconfigured, updated, or altered shall be automatically downloaded to each work station which incorporates the display with a single download command.

The system shall provide the capability to create or edit all configurations in either an on-line or off-line mode. On-line editing capabilities shall be designed to prevent loss of control of the process during the editing process. All off-line application builder tools shall include printer drivers to allow database reports, control configuration drawings, and color control and information displays to be printed on any HP LaserJet or Inkjet printer.

3A.2.1.12.2.1 Control And Data Acquisition Program Editor. Each Engineer/Operator Work Station in the system shall include a complete set of User-friendly interactive editors for generation and modification of control and information programs. The editors shall be of the latest technology including a mouse driven graphical user interface (GUI) using windowing technology (i.e., drag/drop, cut/copy/paste, etc.). The method of configuring, modifying, and documenting control and data acquisition strategies shall be such that it can be readily understood and used by Engineers/Programmers and Technicians.

Off-line control and data acquisition program editors including all of the features previously listed shall be available for use on any personal computer. The Contractor shall furnish this software in the quantity specified in Section 3A.2.1.A, at the start of the project, for installation on the Purchaser's personal computer(s). Copies shall be furnished with applicable licenses, software or hardware keys, instruction manuals, and other accessories necessary for complete functionality. Programs created or modified off-line shall have all of the features and capabilities as those created or modified using the on-line tools.

3A.2.1.12.2.2 Foreign Device Interface Program Editor. Each Engineer/Operator Work Station in the system shall include a complete set of User-friendly interactive editors for modification of the programs for each type of foreign device interface specified in Section 3A.2.1.A. The editors shall be of the latest technology including a mouse driven graphical user interface (GUI) using windowing technology (i.e., drag/drop, cut/copy/paste, etc.). The method of configuring, modifying, and documenting the foreign device interface strategies shall be such that it can be readily understood and used by Engineers/Programmers and Technicians, and shall be designed so that the Purchaser, can easily re-configure the selection of data to be transferred between the DCS and the foreign device. The command and address attributes required for this configuration shall be straightforward and shall not require extensive mathematical calculations or programming.

3A.2.1.12.2.3 Control and Information Display Editor. The system shall permit the User to use the Engineer/Operator Work Stations to create or modify control and information displays and request that the system store the displays. This capability shall enable the User to expand the information to the Operator as experience and needs dictate. These displays shall be storable in a form portable to future systems or expansions.

The system shall permit the User to specify any control or information display to be viewed in response to a selected point(s) changing status.

Each Engineer/Operator Work Station in the system shall include a complete set of User-friendly interactive control and information display editors for generation and modification of the displays, macros, custom shapes, and custom colors. The editors shall be of the latest technology including a mouse driven graphical user interface (GUI) using windowing technology (i.e., drag/drop, cut/copy/paste, etc.). The interactive editors shall allow the User to build, inspect, or modify any display using any or all of the textual, geometric graphic, or symbolic features of the system. New displays shall be able to be created starting from a blank screen or by recalling existing displays, editing, and storing the new display under a new file name.

The system shall allow the User to create and store frequently used shapes and symbols representing plant and process equipment. These symbols shall be available for use in any process control display. The symbols shall have the capability to be located at any place on a display, to be rotated to any orientation, to be magnified or reduced, to be given any color, and to be dynamically linked to any system variable. The system shall include a library of the Contractor's standard set of geometric symbols (similar to ISA S5.5 symbols) related to power plant equipment. The system shall provide the capability to save User defined groups of geometric graphic elements as macro symbols which can then be imported into other process control displays.

Off-line control and information display editors including all of the features previously listed shall be available for use on any personal computer. The Contractor shall furnish this software in the quantity specified in Section 3A.2.1.A, at the start of the project, for installation on the Purchaser's personal computer(s). Copies shall be furnished with applicable licenses, software or hardware keys, instruction manuals, and other accessories necessary for complete functionality. Control and Information displays created or modified off line shall have all of the features and capabilities as those created or modified using the on-line tools.

3A.2.1.12.2.4 System Database Editor. The Contractor shall provide a database editor which allows deletion of existing computer points, addition of new computer points, examination of all existing computer points and their parameters in the data files and addition, deletion, and modification of these parameters by interactive, conversational, cross-linked, high level software through any Engineer/Operator Work Station under password or key lock protection. The editor shall have the capability to modify data point parameters while the data highway communications network and Control and Operator Interface Processors are on line, without any disruption of control and/or interlock functions. The editor shall have the capability of modifying any or all database point parameters. The editors shall utilize the latest technology including a mouse driven graphical user interface (GUI) using windowing technology (i.e. drag/drop, cut/copy/paste, etc.).

The database editor shall be able to retranslate the system database back into the original format of the Purchaser's I/O list. The retranslated I/O list shall reflect all additions, deletions, or modifications made to the system database while on line.

Off-line database editors including all of the features previously listed shall be available as a part of the control and data acquisition program editor and/or the control and information display editor. If off-line database editors are not included in these editors, the Contractor shall furnish these editors in the same quantity as the control and information display editor as specified in Section 3A.2.1.A. These editors shall be supplied at the start of the project, for installation on the Purchaser's personal computer(s).

3A.2.1.12.3 Applications Software. High level application-oriented languages shall be used for all communication, control, and data acquisition programs. These languages shall contain algorithms to accomplish all the logic functions commonly used in utility power control and information systems.

The language design shall be such that field modifications to any of these programs can be rapidly accomplished and documented by the User.

The application languages shall be supported by an operating system capable of scheduling and executing a program or series of programs on a periodic basis or upon the occurrence of some predefined event. The languages shall include the facility to utilize all normal system functions for display, reporting, trending, alarming, etc., for all system variables, including intermediate variables. The Contractor shall supply all standard formulations required such as thermodynamic properties, thermocouple linearization, resistance temperature detector curves, etc.

The software shall have the following capabilities:

- A high level language which shall be used to build programs which will run at selectable time intervals.
- Provision to specify individual high level language coded routines which shall be executed when any alarm or any return-to-normal message occurs on a per analog or calculated point basis.
- Provision to specify individual high level language coded routines which shall be executed when a contact change occurs on a per point basis.

3A.2.1.12.3.1 Control Programs. All Modulating Control programs shall be developed by using a building block approach. The basic building blocks shall be constructed from control algorithms commonly used to perform Modulating Controls and Discrete Controls in utility power plants. All program configuration and modification functions shall be able to be accomplished with the system on-line without affecting the operation of any of the control subsystems.

The Discrete Control logic shall be programmed in ladder diagram or function block format. If the control strategy of a control subsystem requires both Modulating Control and Discrete Control, the two types of control functions shall be integrated and executed as a single program.

3A.2.1.12.3.2 Information Programs. Information programs shall be designed to support all data acquisition, information management, and Operator interface activities of the system, including, as a minimum, the following:

- Input/output data processing.

- Database management.
- Alarm checking and reporting.
- Performance calculations.
- Control and information displays.
- Reporting, report writing, and data extraction to spreadsheet programs.
- Data storage.
- Software configuration.
- Operator interface.

The programs shall be designed to support commonly used high level languages such as FORTRAN, C+/C++, Visual Basic, ActiveX, and Java to be used for User-written programs. The manufacturer's standard programs shall be used. However, the programs shall be organized into easy-to-identify and easy-to-use packages on a functional basis to be run either independently or, if necessary, in conjunction with other programs. The Operator interface software package shall be designed to provide a uniform work procedure for all Operator interface devices, and all interface activities shall be menu driven with "help" functions, conducted in an interactive and conversational mode. This software shall be designed to be easily understood by Operators and Engineers/ Programmers with no expertise in computer systems.

3A.2.1.12.3.3 Databases. An I/O list database will be developed to allow design information transmittal between the Purchaser and the Contractor. A system database shall be developed that will allow access of the I/O by the control system.

In the databases, a unique identifying code (tagname) shall be assigned to each analog, digital, calculated, data linked, or manually inserted point, by which the point may be referenced by both the Operator and the system. The code shall consist of at least 12 alphanumeric characters. The code format shall be as determined by the Purchaser and shall not be subject to any Contractor requirements.

3A.2.1.12.3.3.1 I/O List Database. The Contractor shall develop all I/O database information, including the tagname, functional point description, and electrical characteristics for the process I/O, using a commercially available database program in an agreed upon format. The Contractor shall be responsible for maintenance of the database from creation until the system is shipped to the project site.

The Contractor shall include I/O card and termination information in the database. In addition to providing information on active I/O, the Contractor will populate the database with the hardware information for all available spare points on all cards. The database will them be submitted to the Purchaser for review. The I/O termination locations shall be acceptable to the Purchaser, and shall be in an arrangement which will assure that functional and electrical characteristics are matched. The I/O termination locations shall not be selected in a particular order solely to satisfy Contractor requirements.

At the time of shipment, the Contractor shall furnish an as-shipped I/O list database to the Purchaser. The as-shipped database shall be in the same format as the initial I/O list database provided by the Purchaser.

The Contractor shall use the as shipped I/O list database to generate the system database. The Contractor shall be responsible to correct any errors to meet system acceptance criteria.

3A.2.1.12.3.3.2 System Database. The Contractor shall provide a system database covering all system points and their attributes. The database organization shall be a standard database format, so that a point shall be stored as a file record and the attributes of that point shall be stored in the file as fields. The Contractor shall be responsible to correct any discrepancies with the database and the as-implemented system to meet system acceptance criteria.

Each point shall be supported by a set of parameters which represent the point properties. Typical point parameters shall include, but shall not be limited to, tagname functional point description, engineering units (Analog Points), state descriptions (Digital Points), scan rate, alarm limits, and value.

3A.2.1.12.4 Diagnostic Programs. Diagnostic programs shall be provided for the following diagnostic tests:

- Initiation checks.
- On-line diagnostics.

The initiation checks shall be initiated each time power is applied to a Control or Operator Interface Processor. These checks shall monitor the startup sequences of the Processor to ensure that the Processor has been successfully powered up and in the proper working condition.

The on-line diagnostics shall be executed automatically during normal on-line operation of the Control and Operator Interface Processor, providing continuous monitoring of the Processor functions, including, but not limited to, logic processing, I/O processing, memory functions, and communications functions. Data highway communications network, controller, card, and error status information shall be available and the system shall present this information in English terms. Cross-referencing of numeric values to a diagnostic manual for initial problem determination is not acceptable.

Hardware diagnostic test software shall be provided for the following computer equipment. These diagnostics shall include fault analysis to the circuit board level:

- Distributed processing units.
- Memories.
- Input/output equipment (communications, racks, power supplies, and individual I/O modules).
- Peripheral and display devices.
- All communications networks.

Peripheral devices requiring diagnostic test software shall include the following:

- Mass memories (disks, tapes, etc.).
- Multiplexing system.
- Printers.

"Watchdog" diagnostics shall be provided which periodically check the operation of all communications network nodes and alarm detected problems. Time synchronization between

all nodes shall be periodically checked and set by the DCS to prevent inaccurate timing of alarms or SOEs.

3A.2.1.13 DCS Specific Documentation. In addition to hard copies, all system drawings shall be provided in electronic format on CD-ROM. Software shall be furnished by the Contractor for viewing drawings provided in formats other than AutoCAD, PDF, TIFF, and JPEG.

2.1.13.1 Program Storage.

3A.2.1.13.1 Program Storage. All operating system and applications software shall be provided with the system on CD-ROM. The Contractor shall provide clean (no patches) source files of all programs. Two complete sets of system loadable files and application loadable and source files shall be furnished to the Purchaser. The CD-ROMs shall be delivered to jobsite separately from the system hardware.

3A.2.1.13.2 Hardware Maintenance. Sufficient documentation shall be provided to assure efficient maintenance of all Contractor-furnished hardware by Purchaser's personnel. This documentation shall include point-to-point wiring diagrams and schematic diagrams of all electronic assemblies, supplemented with concise descriptions of the theory of operation of individual subsystems, including third party hardware.

The Contractor shall furnish documentation which will assist the Purchaser's personnel in assuring a short mean-time-to-repair in the event of a failure. This may be accomplished by documenting problem symptoms along with possible repair solutions.

Full procedures associated with on-line and off-line diagnostics shall be provided as part of the system. The procedures shall be complete enough to allow maintenance of the equipment to the card level.

3A.2.1.13.3 Programming Reference. Documentation shall be supplied to assist the Purchaser's personnel in software development and maintenance. This documentation shall include descriptions of all programming languages, editors, and utilities supported by the DCS.

Programming documentation shall be included on two levels. One level will be used for training personnel who have a programming background, but are unfamiliar with the particular language; the other level shall be used for reference by personnel who are familiar with the language, but need concise in-depth information for assistance.

3A.2.1.13.4 System Troubleshooting Guide. Documentation shall be supplied to assist the Purchaser's personnel in analyzing system failures. Documentation shall include but not be limited to procedures to follow after a system failure to isolate the error, locations of pertinent operating system parameters for automatic restarts, and a list of errors that cause system failure.

A troubleshooting guide for software as well as hardware will assist the Purchaser's personnel to locate problems on a malfunctioning system.

3A.2.1.13.5 Control Program Documentation. The Contractor shall provide hard copy printouts of all control programs in the system's standard (machine output) documentation format. The number of copies provided shall be as specified elsewhere for all required drawings. The Contractor shall document all Modulating Control programs with functional logic diagrams conforming to the format defined in ISA (SAMA) Standard RC22-11 "Functional Diagramming of Instrument and Control Systems," and/or with written descriptions as specified in Section 3A.2.1.A. The Contractor shall document all sequential and digital control programs (motor control, valve control, burner control, etc.) with diagrams conforming to one of the formats defined in IEC Standard 1131-3, and/or with written descriptions as required by Section 3A.2.1.A.

3A.2.1.14 System Testing.

3A.2.1.14.1 Factory Testing. The minimum duration for the factory acceptance test shall be as defined in Section 3A.2.1.A. Factory testing shall include, but not be limited to, the following:

- Point-by-point verification and exercising of all inputs and outputs. Purchaser may elect to witness these test separately from and prior to the factory acceptance test.
- Point-by-point continuity check of the terminal cabinets (if not checked as part of I/O verification).
- Repeated powering up and powering down of all system components.
- Demonstration of the proper functioning of all hardware.
- Demonstration of single failure responses to detectable failures including proper operation during failover from primary to backup Control Processor and back again to primary, failure of one channel of each redundant communication system, and power supply failures.
- Demonstration of the timing and accuracy of the SOE system both in the same Control Processor and between Control Processors.
- Demonstration of required spare system capacity.
- A closed loop checkout of all Modulating Control logic using a simulation of the process.
- A closed loop checkout of all Discrete Control logic using simulation of the field devices.
- Demonstration of all Operator Interface Functions.
- Functional review of all Contractor configured control and information displays.
- Demonstration of the proper functioning of the Contractor-supplied software. Included in the software tests shall be procedures to verify the proper operation of the following system software functions: all on-line editing functions; all analog scan conversion and limit checking routines; all digital scan routines; all Operator communication routines; all editors, configurators, compilers, and assemblers; all software debug programs; all software diagnostic routines; all display and printing routines; all alarm output routines; and all programming support routines. Included in the software tests shall be procedures to verify the proper operation of the applications programs using simulated I/O, all real-time variable calculations and all performance calculations.
- All prefabricated cables supplied under this Contract. The prefabricated cables shall be connected for the tests in exactly the same configuration as they will be installed at

the jobsite. The Contractor may use temporary test cables during the test for all cable being supplied in bulk lots without factory installed connectors.

- Demonstration of the proper functioning of all Foreign Device Interfaces using Contractor-furnished PLCs, PC, or emulators.

Three months prior to the start of the factory test, the Contractor shall submit to the Purchaser for approval, the exact testing procedure which he intends to use. Following Purchaser review, the Contractor shall submit a final test procedure and schedule.

The Contractor shall furnish all power supplies, switch and light panels, meters, signal generators, test cables and jumpers, logic simulators, and emulators required to perform the specified tests.

Following the test if, in the opinion of the Purchaser, the system has not been adequately manufactured, tested, or debugged, the test shall be rerun. All of the Contractor's costs associated with retesting the system shall be the responsibility of the Contractor. The system shall not be shipped without the approval of the Purchaser.

Factory tests shall be witnessed by the Purchaser. The results of all factory tests shall be documented and submitted to the Purchaser.

3A.2.1.14.2 Performance Testing. If during plant commissioning, the Purchaser sees significant evidence indicating a problem with the DCS performance, the Contractor's technical representative shall participate in testing the performance of the DCS. When the DCS is deemed by the Contractor to be in final and completed status and with concurrence of the Purchaser, performance tests will be conducted to verify that the response times of the DCS are in accordance with the requirements of Article 3A.2.1.1.4 titled System Timing. The testing procedures shall be agreed upon by the Contractor and the Purchaser prior to the tests.

The generating plant shall be in normal operation, under automatic control, and with the DCS equipment fully functioning. Minor discrepancies to the above preconditions may be waved by joint agreement of the Contractor and the Purchaser.

3A.2.1.15 Packaging for Shipment. Prior to shipment, all shipping stops, bolts, ties, etc., shall be installed in cabinets and devices. Contractor shall install additional protection as required to prevent damage during shipping. Any delicate modules or circuit boards shall be disconnected, packed, and shipped to the jobsite to be remounted. All accessories, mounting devices, and packing lists shall be packed and shipped with the equipment.

Each separately shipped group of equipment shall be prepared as an individual shipping unit and shall be braced adequately and rigidly so that no damage will occur in transit, lifting, or installation. Provisions shall be made for lifting and skidding. All lifting points shall be clearly marked. Disconnected wiring shall be properly supported. The equipment shall be adequately protected against the weather and mechanical damage during transit and storage.

Performance and Design Requirements

SYSTEM SPARE CAPACITY (3A.2.1.1.5)

Spare Installed I/O Points of Each Type:	20 %
Spare Available I/O Card Slots in I/O Cabinets:	20 %
Spare I/O Terminal Blocks in I/O Termination Cabinets:	20 %
Spare Component Space/Slots (Control Processors, Communication Controllers, Memory Modules, Power Supply Modules, etc) in System Electronics Cabinets:	20 %
Spare Logic Block, Database, and Execution Capacity (available for future use without exceeding manufacturer's recommended maximum loading) in each Control Processor:	40 %
Spare Display and Database Processing and Storage Capacity (available for future use without exceeding manufacturer's recommended maximum loading) in each Operator Interface Processor:	40 %

Special Requirements:
None

SYSTEM ENVIRONMENTAL REQUIREMENTS (3A.2.1.1.6)

Item	DCS Equip Location	Temperature	Humidity
1	Control Equipment Room	10°C - 35°C	0 - 50% Non-Condensing
2	Main Control Room	10°C - 35°C	0 - 50% Non-Condensing
3	Remote Plant Areas	0°C - 55°C	0 - 95% Non-Condensing

Special Requirements:
None

<<NOTE to Spec Developer - The information highlighted in yellow in the above and following tables must be reviewed and revised as required for the unit. Data highlighted in yellow with black text (default) is default data that may be correct, data highlighted in yellow with red text (sample) is sample data that MUST be corrected for the unit. >>

MODULATING (CONTINUOUS) CONTROL FUNCTIONS (3A.2.1.3)

Yes **Modulating Control Functions Shall be Programmed by Contractor as Defined Below and in the Specification**

Logic Configuration Engineering Services Scope

[illegible]

Purchaser Provided Information

- Yes Existing Configuration Diagrams
- No Written Descriptions of Operation
- No Simplified Logic Diagrams
- No Detailed Logic Diagrams

Contractor Furnished Documentation

- Yes Detailed System Analog Configuration Printouts
- No Detailed Logic Diagrams
- No Detailed Written Descriptions of Operation

Special Requirements:

1. The Contractor shall provide a list of all enhancements/modifications to the existing combustion control logic for Purchaser approval.

<<NOTE to Spec Developer - If modulating control functions will not be provided as a part of this specification, replace the YES entry at top of this sheet (near the statement " Modulating Control Functions Shall be Programmed by Contractor as Defined Below and in the Specification") to NO. Also replace all seven YES/NO entries at the center of the sheet (under the statements "Purchaser Provided Information" and "Contractor Furnished Documentation") to N/A >>

MULTIPLE MEASUREMENTS (3A.2.1.3)

Item	Qty/Control Signal Name	Number of Signals
1	10 Multiple Measurements	3
2	15 Multiple Measurements	2

Note: The I/O for these devices are included in the I/O quantities listed under I/O REQUIREMENTS in these data sheets

Special Requirements:
None

GENERAL SYSTEM PERFORMANCE (3A.2.1.3.2)

Performance Parameter	System Performance During Steady State	System Performance During Load Change (Between 50% and 100%)					
		3 % / Min		5 % / Min		20 % / Min	
		Increase	Decrease	Increase	Decrease	Increase	Decrease
Throttle Press Dev (bar)	+ / - 2	- 3	+ 3	- 5	+ 5	- 10	+ 10
SH/RH Temp Dev (DEGC)	+ / - 2	+ / - 2	+ / - 2	+ / - 5	+ / - 5	+ 6 / - 10	+ 6 / - 10
Drum Level Dev (mm)	+ / - 5	+ / - 5	+ / - 5	+ / - 6	+ / - 6	+ / - 10	+ / - 10

Special Requirements:
None

MOTOR CONTROL FUNCTIONS (3A.2.1.4.1)

Yes **Motor Control Functions Shall be Programmed by Contractor as Defined Below and in the Specification**

Logic Configuration Engineering Services Scope

This is a fully configured, assembled, staged, and tested logic system. The Purchaser will provide the existing equipment control schematics defining the application requirements which shall be interpreted by the Contractor, and which shall be the basis of logic configuration drawings prepared by the Contractor. The Purchaser will review the Contractor's logic configuration to assure that it meets the intent of the information provided and the specification requirements. The Contractor shall configure the logic system. The Purchaser will develop a preliminary I/O database in an agreed upon format for the Contractor's use in implementing the system database. The Contractor shall provide engineering to define and produce system configuration diagram, cabinet arrangement drawings, cabinet internal wiring diagrams, external connection diagrams for power, grounding, and communications, detailed job specific I/O termination drawings, logic configuration drawings, application logic files, and control system tuning parameters and timing settings. The Contractor shall furnish standard product literature and drawings including, but not limited to, hardware and software instruction manuals, and certified equipment outline and wiring drawings. After startup of the unit(s), the Contractor shall update and reissue all hardware, wiring, and logic drawings to reflect the changes made during installation and commissioning of the DCS.

Purchaser Provided Information

- **No** Written Descriptions of Operation
- **No** Simplified Logic Diagrams
- **No** Detailed Logic Diagrams
- **Yes** Existing Motor Control Schematics

Contractor Furnished Documentation

- **Yes** Detailed System Logic Configuration Printouts
- **No** Detailed Logic Diagrams
- **No** Detailed Written Descriptions of Operation

Special Requirements:

1. The Contractor shall configure motor control functions based on mutually agreeable logic templates. After agreement and configuration, the Contractor will test the templates, with these tests witnessed by the Purchaser at the Purchaser's discretion. After template testing the Contractor shall configure each motor control loop based on the existing motor control schematic diagrams issued as technical attachments to this specification.

<<NOTE to Spec Developer - If motor control functions will not be provided as a part of this specification, replace the YES entry at top of this sheet (near the statement " Motor Control Functions Shall be Programmed by Contractor as Defined Below and in the Specification") to NO. Also replace all seven YES/NO entries at the center of the sheet (under the statements "Purchaser Provided Information" and "Contractor Furnished Documentation") to N/A >>

MOTOR CONTROL FUNCTIONS (con'd)

The Contractor Shall Program Motor Control Logic for Equipment Including but not Limited to the Following:

Item	Quantity	Equipment Description
1	28	Switchgear Motor Starters
2	118	MCC Motor Starters
3	14	Motor Operated Valves
4	42	Solenoid Operated Valves
5	30	Miscellaneous Pushbuttons/Switches

Special Requirements:
None

BURNER CONTROL FUNCTIONS (3A.2.1.4.2)

Yes **Burner Control Functions Shall be Programmed by Contractor as Defined Below and in the Specification**

Logic Configuration Engineering Services Scope

This is a fully configured, assembled, staged, and tested logic system. The Purchaser will provide the existing control system configuration diagrams, simplified or generic functional descriptions, simplified or generic functional logic diagrams, and/or steering logic for approved logic macros, defining the application requirements which shall be interpreted by the Contractor, and which shall be the basis of logic configuration drawings prepared by the Contractor. The Contractor shall enhance the provided configurations to upgrade them to the Contractor's current engineering practices. The Purchaser will review the Contractor's logic configuration to assure that it meets the intent of the information provided and the specification requirements. The Contractor shall configure the logic system. The Purchaser will develop a preliminary I/O database in an agreed upon format for the Contractor's use in implementing the system database. The Contractor shall provide engineering to define and produce system configuration diagram, cabinet arrangement drawings, cabinet internal wiring diagrams, external connection diagrams for power, grounding, and communications, detailed job specific I/O termination drawings, logic configuration drawings, application logic files, and control system tuning parameters and timing settings. The Contractor shall furnish standard product literature and drawings including, but not limited to, hardware and software instruction manuals, and certified equipment outline and wiring drawings. After startup of the unit(s), the Contractor shall update and reissue all hardware, wiring, and logic drawings to reflect the changes made during installation and commissioning of the DCS.

Purchaser Provided Information

- Yes Existing Configuration Diagrams
- No Written Descriptions of Operation
- No Simplified Logic Diagrams
- No Detailed Logic Diagrams

Contractor Furnished Documentation

- Yes Detailed System Logic Configuration Printouts
- No Detailed Logic Diagrams
- No Detailed Written Descriptions of Operation

Special Requirements:

1. The Contractor shall provide a list of all enhancements/modifications to the existing burner control logic for Purchaser approval.

<<NOTE to Spec Developer - If burner control functions will not be provided as a part of this specification, replace the YES entry at top of this sheet (near the statement " Burner Control Functions Shall be Programmed by Contractor as Defined Below and in the Specification") to NO. Also replace all seven YES/NO entries at the center of the sheet (under the statements "Purchaser Provided Information" and "Contractor Furnished Documentation") to N/A >>

BURNER CONTROL FUNCTIONS (con'd)

The Contractor Shall Program Burner Control Logic for Equipment Including but not Limited to the Following:

Item	Quantity	Equipment Description
1	6	Coal Mills
2	12	Gas/Oil Burners
3	12	Igniters

Special Requirements:
None

PERFORMANCE CALCULATIONS (3A.2.1.6.2)

No **Performance Calculations Shall be Programmed by Contractor as Defined Below and in the Specification**

Item	Equipment Description

Special Requirements:
None

CONTROL AND INFORMATION DISPLAY FUNCTIONS (3A.2.1.7)

Display Development Engineering Services Scope

Display Development Engineering Services Scope Level

[illegible]

	Minimum System Capability	Number of Displays Programmed by Contractor
Trend Displays - (3A.2.1.7.1)	100	40
Bar Chart Displays - (3A.2.1.7.2)	20	0
X-Y Plot Displays - (3A.2.1.7.3)	5	0
Process Control Displays - (3A.2.1.7.4)	300	100
Faceplate Displays - (3A.2.1.7.5)	300	100
Text Displays - (3A.2.1.7.6) (Permissive, Sequence, Run Time, Help, etc)	300	200
System Displays - (3A.2.1.7.9)	—	As Required

Special Requirements:
None

SYSTEM DATA REPORTING FUNCTIONS

	Minimum System Capability	Number of Reports Programmed by Contractor
Periodic Reports - (3A.2.1.8.1)	25	4
Trend Reports - (3A.2.1.8.2)	25	4
User-Formattable Reports - (3A.2.1.8.7)	50	0

	Report Programmed by Contractor
Post Trip Review Report - (3A.2.1.8.3)	Yes
Maintenance Data Report - (3A.2.1.8.4)	Yes
Housekeeping Report - (3A.2.1.8.5)	Yes
Sequence-of-Events Report - (3A.2.1.8.6)	Yes

Special Requirements:
None

HISTORICAL DATA FUNCTIONS (3A.2.1.9)

Yes Short-Term (Trend) Data Storage Shall Be Provided by Contractor as Defined in Specification

Short-Term Data Storage Buffer Storage Time: 24 Hours

Yes Long-Term (Historian) Data Storage Shall Be Provided by Contractor as Defined in Specification

Long-Term Data Storage Medium (if required): CD-ROM

Item	Minimum Quantity	Point Type	Collection Rate	Description
1	1000	AI	1 sec	Short Term Data Storage
2	2000	DI	1 sec	Short Term Data Storage
3	700	AI	10 sec	Long Term Data Storage
4	1000	DI	10 sec	Long Term Data Storage

Special Requirements:
None

CONSUMABLES REQUIREMENTS	Article	Months
Long-Term (Historian) Data Storage Equipment: (CD-ROMs, DVDs, etc.)	(3A.2.1.9.2)	3
Printers:	(3A.2.1.10.7)	3

Special Requirements:
None

I/O REQUIREMENTS (3A.2.1.10.3)

Partitioning Engineering Services Scope

Partitioning Engineering Services Scope Level

The Contractor shall be responsible for partitioning of the I/O and logic to meet the requirements for process and equipment separation and redundancy. As a minimum the following rules shall apply: Where multiple measurements of a single process parameter are input to the system for redundancy, no two of those measurements shall be assigned to the same I/O card or rack. Where similar parameters from two or more individual pieces of equipment are input to the system, those similar parameters shall not be assigned to the same I/O card or rack. The Contractor shall submit the I/O assignments to the Purchaser for review prior to the hardware order. It is the option of the Purchaser, the partitioning does not provide adequate process security, the Contractor shall re-partition the I/O based on the Purchaser's comments.

Special Requirements:
None

I/O REQUIREMENTS (con'd)

The Contractor Shall Provide I/O in the Quantities Listed Below:

The I/O Quantities Listed Below Do Not Include Required Spares
Digital I/O Interrogation Power Switching Shall Be Hot Switching

Item	Qty	I/O Equipment Location /Function	Type	Elect Range /Pwr Source
1	47	Control Equipment Room Combustion Controls (CCS)	Analog Input	4-20mA Field
2	68	Control Equipment Room Combustion Controls (CCS)	Analog Input	4-20mA System
3	22	Control Equipment Room Combustion Controls (CCS)	Thermocouple	Type J Field
4	56	Control Equipment Room Combustion Controls (CCS)	Thermocouple	Type E Field
5	59	Control Equipment Room Combustion Controls (CCS)	Analog Output	4-20mA System
6	3	Control Equipment Room Combustion Controls (CCS)	Analog Output	0-10VDC System
7	234	Control Equipment Room Combustion Controls (CCS)	Digital Input	240VAC Field
8	2	Control Equipment Room Combustion Controls (CCS)	Digital Input	250VDC Field
9	94	Control Equipment Room Combustion Controls (CCS)	Digital Output	24VDC Field
10	6	Control Equipment Room Combustion Controls (CCS)	Digital Output	48VDC Field
11	39	Control Equipment Room Combustion Controls (CCS)	Digital Output	240VAC Field
12	89	Control Equipment Room Combustion Controls (CCS)	Digital Output	250VDC Field
13	4	Control Equipment Room Combustion Controls (CCS)	Pulse Input	24VDC System
14	4	Control Equipment Room Combustion Controls (CCS)	Pulse Input	250VDC System

I/O REQUIREMENTS (con'd)

Item	Qty	I/O Equipment Location /Function	Type	Elect Range /Pwr Source
15	267	Control Equipment Room Burner Controls (BCS)	Digital Input	24VDC System
16	257	Control Equipment Room Burner Controls (BCS)	Digital Input	250VDC System
17	32	Control Equipment Room Burner Controls (BCS)	Digital Output	24VDC System
18	64	Control Equipment Room Burner Controls (BCS)	Digital Output	24VDC Field
19	8	Control Equipment Room Burner Controls (BCS)	Digital Output	250VDC System
20	316	Control Equipment Room Burner Controls (BCS)	Digital Output	250VDC Field
21	3	Control Equipment Room Turbine Control System (TCS) - EHC	Analog Input	4-20mA System
22	1	Control Equipment Room Turbine Control System (TCS) - EHC	Analog Input	4-20mA Field
23	5	Control Equipment Room Turbine Control System (TCS) - EHC	Analog Input -Freq/Pulse (From Speed Pickup)	As Reqd As Reqd
24	13	Control Equipment Room Turbine Control System (TCS) - EHC	Analog Input (From LVDTs)	As Reqd As Reqd
25	3	Control Equipment Room Turbine Control System (TCS) - EHC	Analog Input - Current (From CTs)	As Reqd As Reqd
26	3	Control Equipment Room Turbine Control System (TCS) - EHC	Analog Input - Potential (From PTs)	As Reqd As Reqd
27	2	Control Equipment Room Turbine Control System (TCS) - EHC	Analog Output	4-20mA System
28	1	Control Equipment Room Turbine Control System (TCS) - EHC	Analog Output	0-2VDC System
29	7	Control Equipment Room Turbine Control System (TCS) - EHC	Digital Input	240VAC Field

I/O REQUIREMENTS (con'd)

Item	Qty	I/O Equipment Location /Function	Type	Elect Range /Pwr Source
30	7	Control Equipment Room Turbine Control System (TCS) - EHC	Digital Input	240VAC System
31	48	Control Equipment Room Turbine Control System (TCS) - EHC	Digital Input	250VDC System
32	1	Control Equipment Room Turbine Control System (TCS) - EHC	Digital Output	24VDC System
33	26	Control Equipment Room Turbine Control System (TCS) - EHC	Digital Output	240VAC System
34	13	Control Equipment Room Turbine Control System (TCS) - EHC	Digital Output	240VAC Field
35	1	Control Equipment Room Turbine Control System (TCS) - EHC	Digital Output	250VDC System
36	9	Control Equipment Room Turbine Control System (TCS) - EHC	Digital Output	250VDC Field
37	24	Control Equipment Room Turbine Control System (TCS) - TAC	Thermocouple	Type E Field
38	5	Control Equipment Room Turbine Control System (TCS) - TAC	Digital Input	250VDC Field
39	6	Control Equipment Room Turbine Control System (TCS) - TAC	Digital Output	250VDC Field
40	4	Control Equipment Room Turbine Control System (TCS) - TGSI	Analog Input	4-20mA Field
41	12	Control Equipment Room Turbine Control System (TCS) - TGSI	Thermocouple	Type E Field
42	3	Control Equipment Room Turbine Control System (TCS) - TGSI	Analog Input -Freq/Pulse (From Speed Pickup)	As Reqd As Reqd
43	2	Control Equipment Room Turbine Control System (TCS) - TGSI	Analog Input (From LVDTs)	As Reqd As Reqd
44	2	Control Equipment Room Turbine Control System (TCS) - TGSI	Analog Output	1-5mA System

I/O REQUIREMENTS (con'd)

Item	Qty	I/O Equipment Location /Function	Type	Elect Range /Pwr Source
45	9	Control Equipment Room Turbine Control System (TCS) - TGSI	Digital Input	120VAC System
46	2	Control Equipment Room Turbine Control System (TCS) - TGSI	Digital Input	250VDC Field
47	24	Control Equipment Room Turbine Control System (TCS) - TGSI	Digital Output	250VDC Field
48	8	One Satellite Location (2 Cabinet Total) Turbine Control System (TCS) - TGSI	Analog Input	4-20mA System
49	11	One Satellite Location (2 Cabinet Total) Turbine Control System (TCS) - TGSI	Analog Input	4-20mA Field
50	140	One Satellite Location (2 Cabinet Total) Turbine Control System (TCS) - TGSI	Thermocouple	Type E Field
51	49	One Satellite Location (2 Cabinet Total) Turbine Control System (TCS) - TGSI	RTD	100 Ohm System
52	38	One Satellite Location (2 Cabinet Total) Turbine Control System (TCS) - TGSI	Digital Input	240VAC System
53	2	One Satellite Location (2 Cabinet Total) Turbine Control System (TCS) - TGSI	Digital Output	250VDC Field
54	141	Control Equipment Room Data Acquisition (DAS)	Analog Input	4-20mA System
55	235	Control Equipment Room Data Acquisition (DAS)	Analog Input	4-20mA Field
56	39	Control Equipment Room Data Acquisition (DAS)	Analog Input	0-3mA Field
57	418	Control Equipment Room Data Acquisition (DAS)	Thermocouple	Type E Field
58	9	Control Equipment Room Data Acquisition (DAS)	RTD	100 Ohm System
59	47	Control Equipment Room Data Acquisition (DAS)	RTD	10 Ohm System
60	10	Control Equipment Room Data Acquisition (DAS)	Analog Output	4-20mA System

I/O REQUIREMENTS (con'd)

Item	Qty	I/O Equipment Location /Function	Type	Elect Range /Pwr Source
61	476	Control Equipment Room Data Acquisition (DAS)	Digital Input	24VDC System
62	52	Control Equipment Room Data Acquisition (DAS)	Digital Output	48VDC Field
63	11	Control Equipment Room Data Acquisition (DAS)	Pulse Input	24VDC System
64	290	Three Satellite Locations Data Acquisition (DAS)	Thermocouple	Type E Field
65	2720	Control Equipment Room Sequence of Events (SOE)	Digital Input (SOE – 1 msec)	250VDC System

Total I/O: 3160

Special Requirements:

1. Triack and solid state digital outputs are not acceptable to the Purchaser and shall not be provided for any digital outputs.
2. The Contractor shall supply "wetting" power for all digital inputs listed above as system powered. The design of the wetting power must be issued to the Purchaser for approval prior to assembly. As a minimum design basis, the wetting power shall provide individual fuses with no more than 16 points on a fuse and a separate digital input "power monitor" point for each wetting power fuse (the quantity of these power monitor digital inputs are in addition to the above digital input quantities).
3. If the Contractor's I/O modules cannot accept a signal type and range listed in the I/O list, the Contractor shall furnish, install, and wire in his I/O cabinet a signal conditioner with the proper input and output ranges to convert the field signal to a level acceptable to the Contractor's system.
4. The Purchaser, during design of the I/O database, may reassign points from system to system (function to function). This reassigning of points may require I/O cards to be shifted between systems. This shifting of I/O cards between systems, done prior to hardware cutoff, shall not be a basis for any claims by the Contractor if the total system quantity of I/O cards is not affected.

I/O MODULE POINT LOADING (3A.2.1.10.3)

Digital Input:	16	Digital Output:	16	Analog Input:	16	Analog Output-Cntl/Info:	6 + 10
Pulse Input:	16	Thermocouple:	16	RTD Input:	16		

Special Requirements:
None

DIGITAL OUTPUT MODULE RATING (3A.2.1.10.3.2)

	Voltage	Make	Carry	Break Resistive	Break Inductive	Contacts
Digital Output (Relay-AC):	24 Volts AC	10 A	10 A	10 A	3 A	1 - Form C
Digital Output (Relay-DC):	250 Volts DC	10 A	10 A	3 A	1 A	1 - Form C
Digital Output (Relay-DC):	24 Volts DC	10 A	10 A	3 A	1 A	1 - Form C

Relay Rating Reference Temp: 25 degc
Relay UR Rating: 20 msecs

Special Requirements:
None

FOREIGN DEVICE INTERFACES (3A.2.1.10.3.6)

Yes **Foreign Device Interfaces Functions Shall be Provided by Contractor as Defined Below and in the Specification**

Item	Interface Qty	Estimated I/O Per Interface		Redundant	Description
1	1	AI: 20 DI: 10	AO: 2 DO: 10	No	Interface to existing National Instruments Data Acquisition Equipment
2	1	AI: 66 DI: 180	AO: 35 DO: 74	Yes	Interface to existing ABB Advant Pro-Control Processors used for Combustion Control
3	1	AI: 16 DI: 120	AO: 32 DO: 88	Yes	Interface to existing Festo controllers used for Burner Control (single redundant FDI for 16 individual burner Festo controllers)

Special Requirements:
None

OPERATOR INTERFACE EQUIPMENT (3A.2.1.10.4-7)

Item	Quantity	DCS Equipment Location /Description
1	4	Main Control Room Operator Work Stations with Dual 21 inch Flat Screen LCD Type Monitors per Work Station, one mouse, and one standard keyboard (Article 3A.2.1.10.4)
2	1	Main Control Room Operator Work Stations with Single 54 inch Flat Screen Monitor, one mouse, and one standard keyboard (Article 3A.2.1.10.4)
3	1	Main Control Room Display/Screen Printer (Article 3A.2.1.10.7)
4	2	Main Control Room General Use Laser Printer for Logs, Reports, and On-Demand (not real time) Alarm Printing (Article 3A.2.1.10.7)

Special Requirements:
None

MAINTENANCE INTERFACE EQUIPMENT (3A.2.1.10.4-7)

Item	Quantity	DCS Equipment Location /Description
1	1	Computer Room Engineer/Operator Work Station with Dual 21in. Flat Screen LCD Type Monitors, mouse and standard keyboard (Article 3A.2.1.10.5)
2	1	Computer Room General Use Laser Printer (Article 3A.2.1.10.7)
3	1	Computer Room Display/Screen Printer (Article 3A.2.1.10.7)
4	1	Computer Room Supervisory Work Station with Single 21in. Flat Screen LCD Type Monitor, mouse and standard keyboard (Article 3A.2.1.10.6)

Special Requirements:
None

OPERATOR CONTROL CONSOLE (3A.2.1.10.8)

Yes **An Operator Control Console Shall be Provided by Contractor as Defined Below and in the Specification**

Item	Quantity	Description
1	5	Flat-Top Section(s) for Engineer/Operator Work Station Desktop Monitors
2	4	Printer Stand(s) with Storage for Paper, Ink Cartridges, etc.
3	1	Subpanel Console w. cutouts as specified for trip push buttons and other equipment as specified in Section 2A2.3.

Special Requirements:
None

SYSTEM CABINET REQUIREMENTS (3A.2.1.10.9)

Yes	System Electronics Cabinets Shall Be Provided by Contractor as Defined in Specification
Yes	I/O Equipment Cabinets Shall Be Provided by Contractor as Defined in Specification
No	I/O Interposing Termination Cabinets Shall Be Provided by Contractor as Defined in Specification
Yes	Remote I/O Equipment Cabinets Shall Be Provided by Contractor as Defined in Specification
No	Remote I/O Interposing Termination Cabs Shall Be Provided by Contractor as Defined in Specification

Maximum Cabinet Size: Per Contractor Design
Fiber Optic Patch Panel Location: Inside a DCS System Electronics Cabinet

Special Requirements:
None

SYSTEM CABINET DESIGN (3A.2.1.10.9)

Item /DCS Equip Location	Equipment	Cab Rating /Structure /Door Access	Distance (m) From Control Equip Room /Cable Type /Cable Access
1	Control	Nema 1 (IP 23)	N/A
Control Equipment Room/Computer Room	Processors	Free Standing	Per Contractor Design - Metallic or Fiber Optic
		Front & Rear	Bottom
2	Local I/O	Nema 1 (IP 23)	N/A
Control Equipment Room		Free Standing	Per Contractor Design - Metallic or Fiber Optic
		Front & Rear	Bottom
3	Remote I/O	Nema 1 (IP 66)	Per Contractor Design
Remote Plant Areas		Free Standing	Fiber Optic
		Front & Rear	Per Contractor Design

Special Requirements:
None

REMOTE DIAGNOSTIC INTERFACE (3A.2.1.10.10.1)

No A Remote Diagnostic Interface Shall Be Provided by Contractor as Defined in Specification

Special Requirements:
None

REMOTE WEB SERVER INTERFACE (3A.2.1.10.10.2)

No A Remote Web Server Interface Shall Be Provided by Contractor as Defined in Specification

0 Quantity of Remote Access Client Licenses (if required)

Special Requirements:
None

GPS TIME SYNCRONIZATION (3A.2.1.10.11)

No A GPS Time Synchronization System Shall Be Provided by Contractor as Defined in the Specification

No Time Synchronization System Shall Include IRIG-B signal Outputs for External Non-DCS Users
0 Number of External Time Synchronization Signals Required

Special Requirements:
None

SYSTEM CABLE REQUIREMENTS (3A.2.1.10.12)

The Contractor Shall Provide Cable as Defined Below and in the Specification:

Item	Cable Type	Length
1	Data Highway Communications Network - Metallic	Per Contractor Design
2	Operations Network Communications Network - Metallic	Per Contractor Design
3	Printer Communications Network - Metallic	Per Contractor Design
4	Remote I/O Communications Network - Fiber Optic	Per Contractor Design

Unit of Length: m

Special Requirements:
1. The Contractor shall determine and provide cables of lengths as required for their design.
2. The Contractor shall install all communication cables completely in conduit. No more than one communication cable shall be installed in a single conduit.

SYSTEM POWER SOURCES (3A.2.1.11.1)

Item	DCS Equipment Location	Equipment Type	Primary Voltage /Source	Secondary Voltage /Source
1	Control Equipment Room/Computer Room	All Equipment	240 VAC Inverter	240 VAC Inverter
2	Main Control Room	All Equipment	240 VAC Inverter	240 VAC Inverter
3	Remote Plant Areas	All Equipment	240 VAC Inverter	240 VAC Inverter

Primary and Secondary Source Frequency: 50Hz

Special Requirements:

1. The Purchaser's control equipment is currently powered through a combination of feeds directly from the inverter power panels, and from feeds that originate in the inverter power panels, are routed through isolation transformers, and are then routed to additional power panels. The Contractor shall re-use existing control system isolation means provided by the control system replacement project. If additional power feeds are required, the Contractor shall add breakers to Purchaser's power panels or add additional power panels.

THIRD-PARTY/CUSTOM APPLICATION PROGRAMS (3A.2.1.12)

No **Third Party/Custom Application Programs Shall be Provided by Contractor as Defined Below and in the Specification**

Item	Description

Special Requirements:
None

APPLICATION BUILDER SOFTWARE (3A.2.1.12.2)

Item	Quantity	Description
1	2	[illegible]
2	2	[illegible]

Special Requirements:
None

FACTORY ACCEPTANCE TEST DURATION (3A.2.1.14.1)

Factory Acceptance Test Minimum Duration: 4 weeks

Special Requirements:
None

ADDITIONAL REQUIREMENTS

None

Supplemental Requirements

The following supplemental specifications contain additional requirements which are provided in Section 5 Supplementary Requirements. These requirements are applicable unless stated otherwise in the Section.

Supplemental Specifications

A001	Miscellaneous Requirements
A002	Shipping Requirements
Q400	General Equipment Requirements

Section 3A - CONTROL SYSTEM EQUIPMENT
SubSection 2.2 - Turbine Control System - Technical Specification

<<NOTE to Spec Developer - Only use SubSection 2.2 if Turbine Control System Equipment will be procured as part of this specification. If a Turbine Control System will not be procured delete SubSection 2.2 >>

<<NOTE to Spec Developer - Data highlighted in SubSection 2.2 in yellow with red text (sample) is sample data that MUST be corrected for the turbine at this unit. >>

3A.2.2.1 Description of Existing Turbine Equipment. The main steam turbine is an LMZ - Leningrad URSS Model K-215-130, rated at 200MW at 3000 RPM.

The turbine has a following servo valves:

Main stop valve (quantity 1)
Main Steam control valves (quantity 4)
Combined Reheat valves (quantity 2)

3A.2.2.2 Turbine Control System Requirements. This subsection describes the requirements for the new Turbine Control System (TCS).

The main steam turbine control systems shall be implemented in the same platform and utilize the same operator stations as the main plant DCS, and shall be designed in accordance with the criteria specified in this section and the requirements in section 3A.2.1 Distributed Control System. The new control systems shall also be designed in accordance with the latest requirements of turbine manufacturer for these types of turbines.

The Contractor shall furnish a complete system to replace the existing turbine control system.

All existing sensing devices, valves, hydraulic system, and controlled equipment installed at the main steam turbine, including field wiring, will be retained and shall be reused. The Contractor shall be responsible for determining and furnishing all new field mounted sensing devices and instrumentation that are required for the proper functioning of the replacement turbine control system. The Contractor shall modify the existing turbine electro-hydraulic equipment as necessary to interface with the new TCS and provide the functionality as specified herein.

3A.2.2.2.1 Main Steam Turbine Control System Control Functions. Functions of the TCS system shall include, but not necessarily be limited to, the following:

Speed Control Functions

- Overspeed protection by sensing mismatch between unit output, turbine internal pressure, and actual shaft speed.
- Speed and acceleration controls required for turbine rollup. The system shall not permit holding at critical speeds.
- Line speed matching.
- Turbine automatic synchronization.

Load Control Functions

- Control room operator adjustable load limit and load rate of change limit.
- First-stage pressure feedback control with provisions for control room operator to lock this function out.
- Initial pressure limiter with provisions for control room operator to lock out this function in conjunction with variable pressure operation.
- Provisions to accept load control signals from coordinated boiler-turbine control system.
- Early intercept valve actuation.

Mode Control Functions

- Turbine pre-warming mode selection by control room operator.
- Selection by control room operator for manual turbine control.
- Throttle valve full arc admission only.
- Bumpless transfer (transfer without control system induced "step change" transients) for the following:
    - First-stage pressure control in or out.
    - Initial pressure limiter in or out.

Trip Functions

- Trips required for generator protection.
- Turbine overspeed.
- Thrust bearing failure.
- Low lubricating oil pressure.
- Low hydraulic fluid pressure.
- Manual trip by control room operator from hard-wired trip push buttons.
- Trips demanded by devices furnished by the Contractor.
- Trips required for turbine or EHC system protection.
- High exhaust pressure trip.
- High exhaust temperature trip.
- SOE time-stamping of all causes of turbine trips to 1 ms
- Trips required for Unit Trip protection.
- Control room operator electrical reset for all of the above trip functions from operator interface equipment.

Logic and displays individually indicating first-, second- and third-out trips shall be provided by the Contractor. All trip indications shall be latched until reset by the operator.

Alarm Functions

- Individual trip conditions.
- EHC tripped.
- High differential expansion.
- Any limit functioning (individual).
- Any runback or setback functioning (individual).
- System trouble and diagnostic alarms.

All alarms shall be available for display on the control room operator interface equipment.

Runback Functions

- All Runbacks or setbacks shall be furnished as necessary to protect the turbine or generator.

Test Functions

- Applicable trip systems. On-line testing of the applicable trip systems shall duplicate the current capabilities.
- Main steam stop valves.
- Reheat stop valves.
- Intercept valves.
- Main steam control valves.
- Thrust bearing wear.
- Overspeed trip governor (includes digital speed indication).
- EHC fluid pumps, motors, pressure instrumentation, and solenoids. Testing of EHC fluid pumps, motors, pressure instrumentation, and solenoids shall duplicate the capabilities of the existing controls.
- Electrical Trip Test.

Control room operator interface equipment shall enable the operator to test the equipment while the machine is loaded, without causing a trip:

3A.2.2.2.2 Main Steam Turbine Control System Interface Functions.

- The Contractor shall provide interfacing functions to replace all existing interfaces to other plant control systems.
- The Contractor shall provide Operator Interface Graphic Displays for the Turbine Control System functions.

3A.2.2.2.3 Main Steam Turbine Startup System. All equipment, software, and accessory devices required to completely automate startup, shutdown, and load changes of the main steam turbine shall be provided. Startup shall be from turning gear through initial loading of the generator and shall include the transfer from full arc to partial arc admission.

The turbine automation shall permit operator control and assessment of status from the DCS monitors in the control room. The system shall provide the capability for an operator to override the automated startup at selected points.

The ATS shall be operable in three basic modes of operation and shall be capable of switching at any time from one mode to any other at the operator's discretion:

Automatic. In automatic mode, the ATS shall perform the start, stop, open, and close functions to control the turbine. The operator shall be apprised of all control actions as they are being performed by means of operator work station graphics. Automatic control actions shall be performed in accordance with the following:

- Selected operating sequences or programs.
- Measurements of conditions at the equipment.

- Calculated stresses at critical points in the turbine. (optional rotor stress package)

Monitor-Automatic. In the monitor-auto mode, the ATS shall advise the operator what steps to perform as the unit is sequenced through selected programs. The ATS shall provide guidance to the operator but shall not actually perform any control actions other than protective functions. Timing of control actions shall be based on the same criteria as in automatic mode.

Manual. In manual mode, the operator shall initiate control operations at such times as he desires. The ATS shall continue to monitor the status and condition of the turbine generator, so that it can assume control again when one of the other operating modes are selected, and shall bring unsafe and/or abnormal events to the operator's attention as they occur.

Protective functions shall be maintained in <u>all</u> operating modes.

In each operating mode, the turbine operation shall be in accordance with the turbine manufacturer's latest curves for turbine warming, startup, loading, shutdown, and emergency shutdown based on fixed or prescribed sequences and calculated levels of rotor thermal stress.

Section 3B – JUNCTION BOXES

3B.1 GENERAL Junction boxes shall be designed, furnished and installed by Contractor as necessary and in accordance with these specifications.

The Contractor shall provide and install identification numbering on all supplied junction boxes. The identification numbering used shall be based on the Purchaser's existing numbering system. The Contractor shall request identification numbers from the Purchaser as necessary for the design.

3B.2 CONSTRUCTION. Type, size, identification, and additional devices, if required shall be furnished as indicated herein.

Terminal blocks mounted in junction boxes shall be mounted on a sheet steel mounting backplate. The mounting plate shall be finished with gloss white enamel or white epoxy coating. Terminal blocks and other devices, if required, shall be mounted by screws with drilled and tapped mounting holes. Mounting of the backplate within the junction box shall be by nuts or welded stud. No mounting holes may penetrate the outside surface of the box. Nameplates shall be furnished for the terminal blocks identifying each terminal block and each terminal row. Wiring, if required, shall be copper with Type SIS VW-1 crosslinked polyethylene insulation rated 600 Volts. Wire size shall be 12 AWG minimum except for instrument wiring, which shall be 16 AWG minimum.

3B.2.1 Junction Boxes, Pull Boxes, and Cabinets. Junction pull boxes, and cabinets shall be constructed in accordance with UL 50 for their intended service. Junction pull boxes, and cabinets shall not have knockouts.

Enclosure type, material, and dimensions shall be as indicated on the drawings and as specified in these specifications. Where no type or size is indicated elsewhere for junction boxes, pull boxes, or cabinets, they shall be in accordance with the requirements of the NEC, Article 370.

Unless indicated otherwise, enclosure types shall be as follows.

Location	Enclosure Type
Indoor (nonhazardous)	
Dry areas	NEMA 12 (IP 65)
Wet areas	NEMA 4 (IP 66)
Outdoor(nonhazardous)	NEMA 4 (IP 66)
Hazardous areas	NEMA rated in accordance with the requirements of the National Electrical Code for the location

Except as indicated otherwise, all junction boxes or pull boxes 100 mm trade size or smaller in any dimension shall be galvanized malleable iron or acceptable equal cast ferrous metal for use with steel conduit.

Except as indicated otherwise, all junction boxes and pull boxes larger than 100 mm trade size for use in indoor locations shall be sheet steel hot-dip galvanized after fabrication and those for use in outdoor or damp locations shall be galvanized cast ferrous metal, sheet steel hot-dip galvanized after fabrication, or sheet steel epoxy coated inside and outside after fabrication. The epoxy coating shall consist of a 3 mil coat of zinc rich epoxy primer with a minimum of 80 percent zinc in the dry film, followed by two finish coats of high solids, high gloss, two component polyamide epoxy. Each finish coat shall be a minimum of 4 mils thick.

Except as indicated otherwise, all cabinets and panels shall be constructed from steel plate reinforced as required to provide true surfaces and adequate support for devices mounted thereon. The thickness of the steel plate shall conform to the requirements of UL. Cabinets and panels shall be of adequate strength to support mounted components during shipping and to support a concentrated load of 200 pounds on the top after erection.

3B.2.2 Outlet Boxes and Switch Boxes. All outlet boxes, switch boxes, and associated fittings shall be constructed in accordance with UL 514.

All surface mounted outlet boxes, switch boxes, and associated fittings shall be galvanized malleable iron or acceptable equal cast ferrous metal for use with steel conduit.

Galvanized steel boxes shall be used only in finished areas where they are completely concealed within walls or ceilings.

Cabinets and panels constructed of steel plate shall be finish coated with two coats or more of gloss alkyd enamel with a minimum 50 percent solids by volume. Exterior surface finish coat color shall be ANSI 61 for indoor locations and ANSI 70 for outdoor locations. The interior surface finish coat color shall be gloss white. Finish coats shall be applied over a rust-inhibitive lead and chromium free alkyd primer with a minimum of 50 percent solids by volume. Surfaces shall be phosphatized before priming.

3B.3 INSTALLATION. Cabinets and boxes shall be rigidly mounted. Mounting on concrete shall be by concrete anchors. Mounting on steel shall be by drilled and tapped screw holes, or by special support channels welded to the steel, or by both. Wall or column mounted cabinets shall be leveled and fastened to the mounting surface with not less than 20 mm air space between the enclosure and mounting surface. Base mounted cabinets shall be leveled and fastened to the floor or concrete bases. All mounting holes in the enclosure shall be used. Except as prevented by the location of other work, all junction boxes and outlet boxes shall be centered on structures.

Conduit openings in boxes shall be made with a hole saw or shall be punched. All unused threaded openings shall be sealed with threaded plugs.

3B.4 JUNCTION BOX AND PULL BOX IDENTIFICATION. The identification number of each junction box and pull box larger than 1 meter by 1 meter shall be stenciled on the cover of the box. The lettering shall be block type and shall be not less than 25 mm high.

The identification number of each junction box and pull box 1 meter by 1 meter and smaller shall be engraved on a phenolic nameplate and attached to the box.

3B.5 SUPPLEMENTAL REQUIREMENTS. The following contain additional requirements which are provided in Section 5. These requirements are applicable unless stated otherwise in this section.

A001 Miscellaneous Requirements
A002 Shipping Requirements

Section 3C - RACEWAY

3C.1 GENERAL. This section covers designing, furnishing, and field installation of a complete raceway system in accordance with this section.

Contractor shall design, furnish, and install raceway sufficient for a complete installation. All conduits shall be rigid galvanized steel (RGS). Cable tray shall be aluminum.

The raceway system is defined to include conduit, flexible metal conduit, cable tray, wireway, cabinets and boxes, and all materials and devices required to install, support, secure and provide a complete system for support and protection of electrical conductors.

The Contractor shall provide and install identification numbering on all supplied raceway. The identification numbering used shall be based on the Purchaser's existing numbering system. The Contractor shall request identification numbers from the Purchaser as necessary for the design.

3C.2 CODES AND STANDARDS. Raceway system materials and devices furnished shall be in accordance with applicable codes and standards as specified in Section 1D.2.

3C.3 GENERAL INSTALLATION REQUIREMENTS. The installation specifications included in this article apply to all raceway system components.

3C.3.1 Routing of Above Grade Raceway. The Contractor shall field route conduit and shall coordinate the location of raceway and raceway supports with other equipment and structures. Wherever practical, raceway shall be routed so that, except where it is changing elevation or being lowered to enter equipment, the lowest part of the raceway, including its associated supports and appurtenances, is at least 1.75 meters above the closest floor or walking surface beneath it. Raceway, including its associated supports and appurtenances, routed above work areas, walkways, platforms, and aisles shall be at least 1.75 meters above the walking surfaces. Raceway, including its associated supports and appurtenances, located at least 1.75 meters above the closest walking surface beneath it, may be routed a reasonable distance away from the supporting wall, ceiling, or structural member so long as the specified support is provided, interference with other equipment and structures is avoided, and the routing is acceptable to the Purchaser. Raceway, including its associated supports and appurtenances, which must be routed closer than 1.75 meters above the closest walking surface beneath it shall be routed as close as possible to surfaces of walls, columns, and the equipment served.

Raceway and raceway supports shall be located at least 300 mm from the final outside surface of all steam piping, including insulation, and 150 mm from the final outside surface of all other insulated piping.

Raceway and raceway supports shall be located so they do not interfere with equipment which expands, vibrates, or moves under normal operation.

3C.3.2 Brackets. Bracket supports shall be used and may be substituted for other type hangers where acceptable to the Purchaser.

3C.3.3 Raceway Attached to Concrete. When raceways are supported from overhead concrete surfaces, the anchorage to the concrete shall be with ITW Ramset/Red Head "Multi Set II" expansion anchors and where supported from vertical concrete surfaces or floors, the anchorage shall be with ITW Ramset/Red Head "Multi Set II," ITW Ramset/Red Head "Wedge Bolts," or Hilti "Kwik Bolts."

Raceway supports attached to concrete floors shall be installed such that they are elevated and grouted approximately 25 mm above the finished floor to prevent corrosion caused by exposure to standing water.

3C.3.4 Raceway Attached to Building Steel. All raceway supports attached to building steel shall be secured by welding or by drilling and tapping. Impact or powder activated devices and fasteners shall not be used.

Raceway shall not be attached to grating.

3C.3.5 Insulation. Raceway and all supports for raceway connected to equipment, piping, raceways, etc., that have been electrically insulated from contact with other structures shall be properly installed to prevent shunting of the insulation. Particular attention shall be given to bearings on large motors and insulated piping flanges.

3C.3.6 Sleeves and Openings. Sleeves and openings for passage of electrical raceways shall be provided as necessary by Contractor. These openings shall be planned for location beneath major pieces of electrical equipment and in certain locations where raceway shall pass through floors and walls.

The Contractor shall be responsible for all required openings. Required openings not provided during structure fabrication shall be provided by the Contractor using a hacksaw, a hole saw or a core drill subject to acceptance by the Purchaser. Openings in concrete floors and walls for single conduit shall be cut by the Contractor with core drills and the conduit grouted in place after being installed.

3C.3.6.1 Openings Through Steel Beams. Conduit may be routed through building steel only when each such routing is acceptable to the Purchaser. Holes required for conduit passages shall be drilled or sawed, not burned.

3C.3.6.2 Openings Through Grating. Field cutting of grating will be allowed only where acceptable to the Purchaser. Alternate routing of raceways should be used to avoid conflict with grating. If field cutting is absolutely necessary, the openings shall be made at divisions or ends of grating sections. These openings shall be square and shall be neatly finished by installing a kickplate around the entire opening and welding it to the cut grating bars. Kickplate material and height shall be equivalent to the kickplate and material and height furnished with the grating or a minimum of 75 mm. All rough spots shall be ground smooth and welds and cuts regalvanized.

3C.3.6.3 Finishing Boxouts. Openings that have been cut through walls and floors of masonry or concrete for the passage of raceways shall be finished either by grouting around the conduit or by grouting steel bands around the periphery of the openings. Where sleeves

or bands are installed in floors, they shall be galvanized and project 100 mm above the finished floors.

3C.3.6.4 Finishing Openings Into Equipment. Openings beneath equipment shall be closed with Bio Fireshield K-10 Mortar or acceptable equal where the cables are in conduits and the conduits project through the openings.

The cut edge of openings through metal decking beneath concrete floors for the passage of cable not enclosed in conduit shall be smoothed to prevent damage to the cable.

All openings beneath equipment, including pull boxes, and openings into the top or sides of equipment in non air-conditioned areas shall be sealed to prevent the entry of dust and liquids. All sealing materials shall be watertight and flame retardant.

All sealing materials and installation methods shall be acceptable to the Purchaser prior to installation.

Openings shall not be closed until all the cables through the openings have been installed and tested.

Unused openings beneath equipment shall be closed with Bio Fireshield K-10 Mortar, Dow Corning 3-6548 silicone RTV foam, Fire-Stop Systems Elasta-Seal, or acceptable equal flame retardant materials.

Installation of materials shall be in accordance with the manufacturer's recommendations. The materials shall be finished to provide a smooth, neat appearance.

3C.3.6.5 Penetrations Through Metal Wall Panel. Conduit penetrations through metal wall panel shall be neatly cut with a hole saw and sealed with silicone caulk on both sides of the wall panel. Openings for multiple conduits and cable trays shall be neatly cut and flashed. Flashing shall be used on both sides of insulated wall panel, and any insulation removed shall be replaced. The completed penetration shall be raintight.

3C.3.6.6 Openings Through Roofing. Raceway shall not penetrate exterior roofs unless the penetration has been provided by the roofing contractor. Where raceway must access equipment located on a roof, the penetration shall be made on vertical portions of walls or parapets and shall be sealed as specified herein.

3C.3.6.7 Fire Stops. Sleeves and openings for the passage of cable and raceway through walls and floors shall be sealed with UL approved fire stops having a fire rating not less than that of the wall or floor penetrated.

All fire stops shall be installed in accordance with the manufacturer's recommendations including installation by trained personnel when so recommended by the manufacturer.

All fire stop materials and installation methods shall be acceptable to the Purchaser.

All seals shall be finished to provide a smooth, neat appearance.

3C.3.7 Extensions of Building Steel to Support Raceway. Extensions of building structures to support raceway shall be of the same material as the structure being extended and shall be finished to match the finish of the extended structure.

3C.3.8 Beam Clamps. Beam clamps for attachment of hanger rods to structural steel beams shall be electrogalvanized steel as manufactured by Unistrut, Globe-Strut, or acceptable equal and shall be provided with safety beam anchor straps. Swivels shall be provided where required to prevent bends in the hanger rods.

3C.3.9 Welding. Welds, welding, and related operations for fabrication of carbon and low alloy steel components shall be in conformance with the AWS Structural Welding Code, AWS D1.1-90, and as specified herein.

Welders, welding operators, and tackers shall be qualified in accordance with the AWS D1.1 code or ASME Section IX. Copies of all welder certifications shall be provided to the Purchaser upon request.

Only shielded metal arc, gas metal arc, and flux cored arc welding processes will be permitted. The short-circuiting transfer mode of the gas metal arc welding process shall not be used. Self-shielded electrodes in the flux cored arc welding process shall not be used.

Low-hydrogen electrodes shall be used for shielded metal arc welding. Electrodes shall have a minimum tensile strength of 5 bar. For the flux cored arc welding process only the E7XT-1 and E7XT-5 wire electrodes will be permitted.

Tack welds shall either be incorporated into, or removed from, the final assembly. Temporary welds used for erection, lifting lugs, etc., shall be removed and the area ground flush.

Weld spatter, including tightly adherent spatter, shall be removed from weld areas and the area shall be prime painted or regalvanized.

All temporary supports which have been welded to the building shall be removed as promptly as possible. After removal, the roughened surface of the building steel shall be ground smooth and a protective primer paint applied equal to that which was initially applied.

Personnel performing visual inspection of welds shall be qualified and currently certified as Certified Welding Inspectors in accordance with the American Welding Society, AWS QC1, Standard for Qualification and Certification of Welding Inspectors.

3C.3.10 Use of Unfinished Raceway. Unfinished runs of raceway shall not be used. Supports and connections for each raceway run shall be completed prior to the pull-in of any pulling line or conductor.

3C.3.11 Repair of Galvanized Surfaces. All galvanized surfaces on which the galvanizing is removed by cutting, drilling, or any other operation shall be regalvanized in accordance with ASTM A780 using "Zinc Rich" coating as manufactured by ZRC Chemical Products Company, Quincy, Massachusetts, or acceptable equal.

3C.4 ELECTRICAL CONDUIT SYSTEM. An electrical conduit system shall be-designed, furnished and installed by Contractor in accordance with these specifications. Conduit shall include all fittings, supports, and materials required for a complete system.

3C.4.1 Conduit Materials. Electrical conduit and associated materials shall conform with the requirements of the articles which follow.

3C.4.1.1 Rigid Galvanized Steel Conduit. Steel conduit, couplings, and elbows shall be hot dip galvanized rigid mild steel in accordance with ANSI C80.1 and UL 6. The conduit interior and exterior surfaces shall have a continuous hot-dip galvanized coating with a transparent overcoat of enamel, lacquer, or zinc chromate. Rigid steel conduit shall be as manufactured by Triangle PWC, Incorporated or acceptable equal.

3C.4.1.2 Electrical Metallic Tubing. EMT shall be used only where acceptable to the Purchaser. Electrical metallic tubing, including elbows and bends, shall be zinc coated mild steel in accordance with the requirements of ANSI C80.3 and UL 797. The exterior surfaces of the tubing shall have a hot-dip galvanized coating with a transparent overcoat of enamel, lacquer, or zinc chromate. Conduit shall be manufactured by Allied Tube and Conduit Electrical or acceptable equal.

3C.4.1.3 Couplings and Thread Protectors. Each length of threaded conduit shall be complete with a coupling on one end and a thread protector on the other. The thread protector shall have sufficient mechanical strength to protect the threads during normal handling and storage.

3C.4.1.4 Liquidtight Flexible Conduit. All liquidtight flexible conduit shall be plastic jacketed, galvanized steel, Anaconda Sealtite Type EF for general service areas or Type HC for high temperature locations.

3C.4.1.5 Flexible Metallic Conduit. Flexible metallic conduit shall be galvanized steel, Anaconda Type DE-710 or acceptable equal.

3C.4.1.6 Metal Conduit Fittings. All metal conduit fittings shall conform to the requirements of ANSI/NEMA FB1 and UL 514 where these standards apply. Galvanized iron or galvanized steel fittings shall be used with steel conduit. Zinc coated steel fittings shall be used with steel tubing. All fittings for aluminum conduit shall be copper free aluminum or aluminum alloy.

Fittings shall be appropriate for area and equipment with which they are associated. Fittings installed outdoors or in wet locations shall be watertight sealed and gasketed. Outdoor fittings shall be of heavy cast construction. Hazardous area fittings and conduit sealing shall conform with NEC requirements for the area classification.

3C.4.1.7 Liquidtight Flexible Conduit Fittings. All liquidtight flexible conduit fittings shall be galvanized steel, Appleton Type STN, STB, or acceptable equal, and shall bear the UL label.

3C.4.1.8 Flexible Metallic Conduit Fittings. Flexible metallic conduit fittings shall be galvanized malleable iron, Appleton Squeeze Type or acceptable equal.

3C.4.1.9 Bushings. Insulated bushings with insulating inserts in metal housings shall be provided for the termination of all conduit not terminated in hubs and couplings. Grounding type insulated bushings shall be provided for all conduit containing power circuits and all conduits located in hazardous areas. Standard bushings shall be galvanized for steel conduit and aluminum for aluminum conduit. Bushings shall be O-Z/Gedney or acceptable equal.

3C.4.1.10 Locknuts. One interior and one exterior locknut shall be provided for all conduit terminations not provided with threaded hubs and couplings. Locknuts shall be designed to securely bond the conduit to the box when tightened. Locknuts shall be so constructed that they will not be loosened by vibration. Gasketed sealing locknuts shall be O-Z/Gedney Type SLG-S or acceptable equal.

3C.4.1.11 Unions. Conduit unions shall be O-Z/Gedney three-piece couplings or acceptable equal.

3C.4.1.12 Raintight Conduit Hubs. Raintight conduit terminating hubs required by these specifications, shall be O-Z/Gedney Type CHM rigid conduit hubs or acceptable equal.

3C.4.1.13 Combination Fittings. Combination fittings used to connect rigid conduit to electrical metallic tubing shall have a threaded throat to receive the rigid conduit and shall have a compression type throat to receive the electrical metallic tubing.

3C.4.1.14 Expansion Fittings. Expansion fittings shall be weathertight, Appleton Type XJ, UNYL, UNFL, or acceptable equal. Expansion fittings shall be provided with bonding jumpers.

3C.4.1.15 Drains. Conduit drains shall be Crouse-Hinds Type ECD or acceptable equal.

3C.4.1.16 Mogul Outlet Bodies. Mogul outlet bodies shall be Appleton Mogul Unilet with built-in rollers or acceptable equal.

3C.4.2 Conduit Supports. Conduit supports shall be furnished and installed in accordance with these specifications. Support material shall comply with the requirements which follow.

3C.4.2.1 Hanger Rods. Hanger rods shall be 18 mm diameter electrogalvanized threaded steel rods.

3C.4.2.2 Conduit Clamps. Conduits in single runs or groups of two shall be supported by one-hole cast metal clamps and clamp-backs. They shall be galvanized malleable iron or acceptable equal cast ferrous metal for steel conduit or tubing and shall be cast aluminum for aluminum conduit.

Supports for banks of three or more conduits shall be constructed of support channels (Unistrut, Globe-Strut, or acceptable equal) with associated conduit or tubing clips. Support channels shall be steel hot-dip galvanized after fabrication with galvanized steel clips for steel conduit or tubing. Both support channels and conduit clips shall be aluminum for aluminum conduit.

Individual conduit terminated at cable tray shall be clamped to the tray with Crouse-Hinds LCC/LCCF Series cable tray conduit clamps or acceptable equal.

3C.4.3 Conduit Installation. Conduit and associated materials shall be installed as described in these specifications.

3C.4.3.1 Routing. Field routed conduit shall not interfere with the installation or maintenance of any dimensioned equipment, building steel, cable tray, HVAC duct, or prerouted piping.

Conduit shall not be routed under crane or trolley rails or in locations which prevent or restrict the use of removable access panels and hatches.

Except as otherwise specified, all conduit shall be installed in exposed runs parallel or perpendicular to dominant surfaces with right angle turns made of symmetrical bends or fittings. Conduit shall not be installed on the outside face of exposed columns or structural members, but shall be routed on the web or on the inside of a flange of the column or structural member. Except where prevented by the location of other work, a single conduit or a conduit group shall be centered on structural members.

All conduit field routing shall be acceptable to the Purchaser. Routing not acceptable shall be rerouted and replaced without expense to the Purchaser.

3C.4.3.2 Moisture Pockets. Conduits shall be installed in a manner that will prevent moisture from draining into equipment or accumulating inside the conduit. If water cannot drain naturally to an opening away from equipment, a fitting shall be installed to provide drainage.

The drainage fitting and its location shall be acceptable to the Purchaser. Any drainage determined to be unacceptable to the Purchaser shall be corrected without expense to the Purchaser.

3C.4.3.3 Couplings and Unions. Metal conduit shall be joined by threaded conduit couplings with the conduit ends butted. The use of running threads will not be permitted.

Where metal conduit cannot be joined by standard threaded couplings, conduit unions may be used if their location is acceptable to the Purchaser.

In vertical or inclined conduit runs, the coupling nut shall be installed uppermost to prevent the entrance of water into the union.

3C.4.3.4 Bends and Offsets. A run of conduit shall not contain more than the equivalent of four 90 degree bends, including those immediately at outlets or fittings. Bends shall be made without reducing the internal diameter of the conduit. The use of a pipe tee or vise for bending will not be permitted. The inside radius of conduit bends shall be not less than six times the inside diameter of the conduit. Conduits or tubing deformed or crushed in any way shall be removed from the jobsite.

3C.4.3.5 Fittings. Conduit fittings shall be installed wrenchtight. Conduit bodies installed in conduit runs containing 600 volt conductor larger than 2 AWG shall be Mogul type. Conduit bodies shall not be installed in conduit runs containing 5 kV and higher voltage conductors, unless the type and location are acceptable to the Purchaser.

Conduit sealing fittings shall be installed so that equipment removal is not restrained any more than if there were no sealing fitting.

3C.4.3.6 Cutting and Threading. The plane of all conduit ends shall be square with the center line. Where threads are required, they shall be cut and cleaned prior to conduit reaming. The ends of all conduit and tubing shall be reamed to remove all rough edges and burrs.

A cutting oil shall be used in threading operations. The dies shall be kept sharp and provisions shall be made for chip clearance.

All steel conduit, after threading, shall be regalvanized.

3C.4.3.7 Connections to Boxes and Cabinets. Conduit shall be securely fastened to all boxes and cabinets. Threads on metallic conduit shall project through the wall of the box to allow the bushing to butt against the end of the conduit. The locknuts both inside and outside shall then be tightened sufficiently to bond the conduit securely to the box. Locknuts on EMT box connectors shall be tightened securely to bond the connectors.

All conduit entering enclosures located outdoors, in hosedown or wet areas, or entering NEMA 12 (IP 65), NEMA 4 (IP 66), JIC oiltight, watertight, or weatherproof enclosures shall enter through raintight conduit hubs or threaded hubs or openings provided with the enclosure. Gasketed sealing type locknuts may be used in lieu of hubs for connections to NEMA 12 (IP 65) enclosures.

If the conduit connected to the equipment exceeds the number or size of threaded hubs supplied with the equipment, additional material shall be furnished and installed as required to connect the conduit to the equipment.

3C.4.3.8 Cleaning. Precautions shall be taken to prevent the accumulation of water, dirt, or concrete in the conduit. Conduit in which water or other foreign materials have been permitted to accumulate shall be thoroughly cleaned or, where such accumulation cannot be removed by methods acceptable to the Purchaser, the conduit shall be replaced.

3C.4.3.9 Liquidtight Flexible Conduit. Liquidtight flexible conduit shall not be greater than 1 meter in length.

Liquidtight flexible conduit shall be installed adjacent to all equipment and devices which move in relation to the supply conduit due to vibration, normal operation of the mechanism, or thermal expansion.

The supply conduit shall be connected to pressure switches, thermocouples, solenoids, and similar devices with liquidtight flexible conduit. Liquidtight flexible conduit shall be installed adjacent to the motor terminal housing for motors requiring 100 mm and smaller

conduit. Provision for vibration and thermal expansion at motors requiring larger than 100 mm conduit shall be accomplished by use of pendent hangers, liquidtight flexible conduit other than at the motor termination, or other means acceptable to the Purchaser.

3C.4.3.10 Flexible Metallic Conduit. Flexible metallic conduit inserts not greater than 2 meters in length shall be installed for light fixture tap conductors above finished ceilings and where indicated on the raceway plans.

3C.4.3.11 Spacing and Attachment of Supports. Except where buried in concrete, all conduit runs shall be rigidly supported. Each conduit shall be supported within 300 mm of junction boxes and fittings. Support spacing along conduit runs shall be as follows.

Conduit Size	Maximum Distance Between Supports
1/2 inch through 1-1/4 inch	2 meters
1-1/2 inch and larger	3 meters

Conduit clamps shall be bolted to building steel using drilled and tapped screw holes. Support channels for three or more conduits shall be welded to building steel or bolted using drilled and tapped screw holes.

3C.4.3.12 Conduit Identification. Each conduit shall be clearly identified with its raceway number. Conduit identification shall be with Electromark Co. Type C-1003 markers or acceptable equal attached with clear wraparound bands. Markers shall be positioned so they are easily read by personnel standing on the floors and walkways. Markers shall be installed on each end of conduits which are in excess of 13 meters, and at only one end of conduits which are 3 meters or less in length.

3C.5 ELECTRICAL CABLE TRAY SYSTEM. An electrical tray system shall be designed, furnished, and installed by the Contractor in accordance with these specifications. Tray shall include all fittings, supports, covers, and materials required for a complete system.

3C.5.1 Cable Tray. All tray, all tray fittings and accessories including covers and splice plates required for the complete system shall be furnished and installed by the Contractor as specified herein. Except as specified otherwise herein, trays shall be ladder type construction.

The Contractor designed tray layout shall be based on tray fittings with a 3 inch tangent.

Trays of solid bottom type construction are of a fabricated metal structure with no bottom openings. Tray splice plates are high-pressure rigid plate type, connected to the side rails by bolting with bolts designed to prevent rotation during tightening of the nuts. Nuts are flanged serrated lock nuts, lock nuts with serrated washers, or lock nuts with captive washers. Bolt, nut, and washer material are as stainless steel.

All other hardware and accessories are of the same material as the tray.

Ladder tray has rung spacing of 225 mm on center.

Cover material and construction is as specified herein under Covers.

3C.5.1.1 Covers. Tray covers shall be furnished and installed by the Contractor.

3C.5.2 Tray Supports. Tray supports shall be furnished and installed in accordance with these specifications. The Contractor shall be responsible for designing the cable tray support system within the load capacity allowable specified by the manufacturer of the support hardware. The following cable loads shall be used for calculating the weight of cables in each tray:

Tray Width (inches)	Nominal Uniform Cable Load Per Linear Meter; Tray Loading Depth as Indicated (kg)	
	4"	6"
6	10	15
12	20	30
18	30	45
24	40	60
30	50	75
36	60	90

Each support shall be capable of supporting the uniform weight of the trays, plus their nominal uniform cable loads, plus a 100 kg concentrated load without exceeding the manufacturer's allowable load capacity for any element of the support system.

The safety factor for each support element shall be 2.0 or greater.

Hanger rods shall not be smaller than 12 mm diameter electrogalvanized threaded steel rods.

Cross members and bracket supports shall be assembled from strut materials hot-dip galvanized after fabrication.

Clamps, fastening hardware, and pins shall be of 316 stainless steel or alternate corrosion-resistant metal acceptable to the Purchaser. All steel accessories not of stainless steel shall be hot-dip galvanized after fabrication in accordance with the requirements of ASTM A153.

Support materials shall be Unistrut, Globe-Strut, or acceptable equal.

3C.5.3 Installation. Cable trays and supports shall be installed in accordance with the cable tray manufacturer's instructions and these specifications.

3C.5.3.1 Tray Surfaces. The Contractor shall cut the trays to length as required. The trays shall be cut with saws and all surfaces over which the conductors and cables will be laid shall

be ground or filed to remove any sharp edges which could cause damage to the cable jacket or insulation either during installation or in normal service. Areas on which the galvanizing is removed shall be repaired.

3C.5.3.2 Application and Location of Supports. Cable trays shall be bracket supported from walls or columns and hanger supported from overhead structural members, at intervals not exceeding 2.5 meters measured along tray center lines between supports. All fittings shall be supported in accordance with NEMA VE 2.

Supports on or from concrete or masonry shall be secured with concrete anchors. Beam clamps with safety anchor straps shall be used to secure supports to structural steel beams for horizontal tray hangers. Welding or drilling and tapping shall be used to secure supports to column steel. Hanger rod support shall include two rods, one on either side of the tray. Nuts shall be fully threaded on the rods and not more than five rod threads shall be allowed to project below the lower nut.

The exact location and dimensions of supports and hangers shall be the Contractor's responsibility. The support system shall be designed so that it does not interfere with the present or future installation or expansion of dimensioned equipment, prerouted pipe insulation, walls, building steel, or HVAC duct. Hanger rods shall not pass between the side rails or rungs of any tray.

Except where supported by wall brackets, cable tray shall be supported by hanger rods, cross members, and hold-down clamps.

3C.5.3.3 Tray Covers. Where required, tray covers shall be installed after cable pulling through the tray is complete. Immediately before installing covers, all debris shall be removed from the tray and the tray vacuumed clean. Joint plates, or acceptable equal, shall be used at all cover joints and at locations where tray covers stop, to prevent the covers from buckling or bowing into the tray. Tray covers shall be secured to the tray at 1.25 meter intervals using the manufacturer's recommended tray cover clips or clamps. In addition to the clips, at least one bolted connection or screwed connection shall be used on each cover section on vertical tray to prevent the covers from sliding down the tray.

Solid covers on tray containing power cable shall be installed with cover extenders to secure the tray cover above the tray side rail and allow for adequate tray ventilation. Extender and cover clips shall be installed at .75 meters intervals.

Where required, tray covers shall be cut or notched to provide clearance around clamps, conduits, and cables as required for proper fit. Cover shall be saw cut. The cut edges shall be filed smooth and regalvanized. Cover edges which are in contact with cable shall be covered with grommet material, Globe Tray DSP, or acceptable equal.

3C.5.3.4 Tray Identification. Each tray shall be clearly identified with its raceway number. Identification shall be at intervals not to exceed 6 meters. Identification numbers shall be a minimum of 50 mm by 20 mm.

3C.6 BOXES AND CABINETS. All boxes and cabinets required throughout the electrical raceway system shall be furnished and installed in accordance with the requirements which follow.

3C.6.1 Junction Boxes, Pull Boxes, and Cabinets. Junction boxes, pull boxes, and cabinets shall be constructed in accordance with UL 50 for their intended service. Junction boxes, pull boxes, and cabinets shall not have knockouts.

Enclosure type, material, and dimensions shall be as specified herein. Where no type or size is indicated elsewhere for junction boxes, pull boxes, or cabinets, they shall be in accordance with the requirements of the NEC, Article 370.

Unless indicated otherwise, enclosure types shall be as follows:

Location	Enclosure Type
Indoor (nonhazardous)	
Dry areas (control room)	NEMA 12 (IP 65),
	NEMA 1 (IP 23) for pull boxes only
Wet areas (burner area)	NEMA 4 (IP 66)
Outdoor (nonhazardous)	NEMA 4 (IP 66)
Hazardous areas	NEMA 9

Except as indicated otherwise, all junction boxes or pull boxes 100 mm trade size or smaller in any dimension shall be galvanized malleable iron or acceptable equal cast ferrous metal for use with steel conduit, and cast aluminum for use with aluminum conduit.

Except as indicated otherwise, all junction boxes and pull boxes larger than 100 mm trade size for use in indoor locations shall be sheet steel hot-dip galvanized after fabrication and those for use in outdoor or damp locations shall be galvanized cast ferrous metal, sheet steel hot-dip galvanized after fabrication, or sheet steel epoxy coated inside and outside after fabrication. The epoxy coating shall consist of a 3 mil coat of zinc rich epoxy primer with a minimum of 80 percent zinc in the dry film, followed by two finish coats of high solids, high gloss, two component polyamide epoxy. Each finish coat shall be a minimum of 4 mils thick.

The top surface of all uncoated galvanized junction boxes and pull boxes located in areas where coal dust might accumulate shall be coated with two coats of clear epoxy after installation. Each coat shall be a minimum of 2 mils thick.

Except as indicated otherwise, all cabinets and panels shall be constructed from steel plate reinforced as required to provide true surfaces and adequate support for devices mounted thereon. The thickness of the steel plate shall conform to the requirements of UL. Cabinets and panels shall be of adequate strength to support mounted components during shipping and to support a concentrated load of 100 kg on the top after erection.

Terminal blocks for 4-20 mA signal circuits and for service greater than 45 and less than 300 volts, including power cables, shall be States Type NT Sliding Link Terminal Blocks, Catalog No. M250XX Series, with front-connected sliding link and white marker strip. Terminal blocks for service of 45 volts and less shall be States Type NT sliding link or Marathon 1500 Series. Terminal blocks for thermocouples shall be Thermo Electric 3225 Series Barrier Type. Terminal blocks mounted in junction boxes shall be mounted on a sheet steel mounting backplate. The mounting plate shall be finished with gloss white enamel or a white epoxy coating. Terminal blocks and other devices, if required, shall be mounted by screws with drilled and tapped mounting holes. Mounting of the backplate within the junction box shall be by nuts on a welded stud. No mounting holes may penetrate the outside surface of the box. Wiring, if required, shall be copper with Type SIS cross-linked polyethylene insulation rated 600 volts and shall be Rockbestos Firewall Type SIS, or acceptable equal.

3C.6.2 Outlet Boxes and Switch Boxes. All outlet boxes, switch boxes, and associated fittings shall be constructed in accordance with UL 514.

All surface mounted outlet boxes, switch boxes, and associated fittings shall be galvanized malleable iron or acceptable equal cast ferrous metal for use with steel conduit, and cast aluminum for use with aluminum conduit.

Galvanized steel boxes shall be used only in finished areas where they are completely concealed within walls or ceilings.

Cabinets and panels constructed of steel plate shall be finish coated with two coats or more of gloss alkyd enamel with a minimum 50 percent solids by volume. Exterior surface finish coat color shall be ANSI 61 for indoor locations, ANSI 70 for outdoor locations. The interior surface finish coat color shall be gloss white. Finish coats shall be applied over a rust-inhibitive lead and chromium free alkyd primer with a minimum of 50 percent solids by volume. Surfaces shall be phosphatized before priming.

3C.6.3 Installation. Cabinets and boxes shall be rigidly mounted. Mounting on concrete shall be by concrete anchors. Mounting on steel shall be by drilled and tapped screw holes, or by special support channels welded to the steel, or by both. Cabinets shall be leveled and fastened to the mounting surface with not less than 6 mm air space between the enclosure and mounting surface. All mounting holes in the enclosure shall be used.

Except as prevented by the location of other work, all junction boxes and outlet boxes shall be centered on structures.

Conduit openings in boxes shall be made with a hole saw or shall be punched. All unused threaded openings shall be sealed with threaded plugs.

3C.6.4 Pull Box Identification. The identification number of each pull box larger than 3 meters by 3 meters shall be stenciled on the cover of the box. The lettering shall be block type and shall be not less than 25 mm high.

3C.7 WIREWAY. Wireway shall be designed, furnished, and installed by the Contractor as specified herein and as required.

3C.7.1 NEMA 1 Wireway. NEMA 1 (IP 23) wireway shall be smooth, seam free, without knockouts and with removable covers. The wireway and associated fittings shall be fabricated of steel not less than 14 gauge and shall be finished with gray enamel over a phosphatized surface. The wireway and associated fittings shall be NEMA 1 (IP23) as manufactured by Hoffman Engineering Co. or acceptable equal.

3C.7.2 Installation. Wireway shall be installed in accordance with the manufacturer's instructions. All field cuts shall be saw cut and square. Sharp edges shall be filed smooth and touchup painted or regalvanized. Wireway shall be rigidly supported at intervals not exceeding 2.5 meters.

3C.8 SUPPLEMENTAL REQUIREMENTS. The following contain additional requirements which are provided in Section 5. These requirements are applicable unless stated otherwise in this section.

A001 Miscellaneous Requirements
A002 Shipping Requirements

Section 3D – CONDUCTORS AND TERMINATIONS

3D.1 GENERAL. Insulated cable, conductors, and conductor accessories shall be designed, furnished, and by the Contractor in accordance with these specifications.

Installation shall be defined to include placement, splicing, terminating conductors, coiling and taping of spare conductors, identification, testing, and verification of each circuit, cable, and conductor.

Terminating a conductor shall include installing cable termination kits for shielded cable, attaching the conductor at its designated location, and insulating the entire connection where specified or required by the application.

The Contractor shall provide and install identification numbering. The identification numbering used shall be based on the Purchaser's existing numbering system. The Contractor shall request identification numbers from the Purchaser as necessary for the design.

3D.2 CABLE SPECIFICATIONS. Cable shall be furnished by the Contractor in accordance with the cable specification sheets included at the end of this section in lengths as necessary for a complete installation.

3D.3 CONDUCTOR AND TERMINATION ACCESSORIES. All conductor accessories including connectors, terminations, insulating materials, support grips, markers, and cable ties shall be furnished and installed by the Contractor. Conductor accessories shall be located in the compartments, enclosures, or junction boxes in such arrangement that a service man will have direct access to the equipment without removal of barriers, cover plates, or wiring. Terminal block shall not be mounted in compartments containing uninsulated conductors operating at voltages above 1000 volts.

Contractor's installation instructions shall be obtained for cable accessories. These instructions shall be in the possession of the craftsmen while installing the accessories and shall be available to the Purchaser for reference.

3D.3.1 Terminal Connectors for Conductors 8AWG and Larger. Terminal connectors for conductors 8AWG and larger shall be pressure or bolted clamp type, Burndy Qiklug, Varilug, or acceptable equal; or compression type, Burndy Type YAV or YA (long barrel), Panduit Type LCA or LCC, or acceptable equal. Acceptable connectors included with Purchaser-furnished equipment may be used.

3D.3.2 Terminal Connectors for Conductors smaller than 8AWG. Terminal connectors for conductors smaller than 8AWG shall be solid barrel ring compression type connectors properly sized for the conductor and the terminal except for terminations on I/O module terminal blocks where compression terminals may be used. The connectors shall be constructed of fine grade high conductivity copper in accordance with QQ-C-576 and shall be tin plated in accordance with MIL-T-l0727. The interior surface of the connector wire barrel shall be serrated, and the exterior surface of the connector wire barrel shall be provided with crimp guides.

Non-insulated terminal connectors shall be provided on conductors terminated on devices equipped with individual fitted covers, such as General Electric Type SB-l control switches and General Electric Type HEA lockout relays. Pre-insulated ring type terminal connectors shall be used on all current and potential transformer circuits. All other terminal connectors for conductors smaller than 8AWG shall be pre-insulated ring type. For terminations on States Type NT sliding link terminal blocks or Marathon Series 1500 or 1600 terminal blocks, the ring type lugs shall be appropriately sized for the #10 stud. For terminations on Allen-Bradley screw terminal block Type 1492-CD3, the ring type lugs shall be appropriately sized for the #8 stud.

Pre-insulated terminal connectors shall include a metallic support sleeve bonded to the vinyl-insulating sleeve and designed to grip the conductor insulation.

Ring type connectors shall be manufactured by AMP, 3M, Panduit, or acceptable equal.

3D.3.3 Terminal Blocks. Types of terminal blocks to be installed shall be as specified herein and shall meet the following requirements.

3D.3.3.1 Sliding Link Type Terminal Blocks. Terminal blocks for 4-20 mA signal circuits or for service greater than 45 volts and less than 300 volts, including power cables, shall be States Type NT Sliding Link Type, Catalog No. M250XX Series, with front-connected sliding link and white marker strip. However, power cable shall not be terminated on sliding link type terminal blocks, if the power cable is used to supply power to more than one piece of equipment, or more than one DCS / PLC I/O card. In such case power cable shall be terminated on Marathon 1500 or 1600 series or Allen-Bradley Cat # 1492-CD3 terminal blocks. Terminal blocks for service of 45 volts and less shall be States Type NT sliding link.

3D.3.3.2 Screw or Stud Type Terminal Blocks. Screw or stud type terminal blocks for all controls applications, and power circuits up to 20 amps and less than 480V shall be Allen-Bradley Cat # 1492-CD3 or approved equal unless specified otherwise in Construction Drawings. Terminal blocks for power circuits for 480V and less and up to 30 Amps shall be Marathon 1500 or 1600 Series.

3D.3.3.3 Terminal Blocks and Test Switches for CT and PT Terminations. Shorting Type terminal blocks for CT circuits shall be Marathon Type 1500SC or 1600SC. Marathon 1500 or 1600 series terminal blocks shall be used for all PT circuits. Test switches for CT and PT terminations shall be ABB FT-1 type or AVO (States) FMS type for semi-flush mount applications. For surface mount applications AVO (States) type MTS test switches with high barriers shall be used. Switch configurations shall be as shown on construction drawings.

3D.3.3.4 Compression Type Terminal Blocks. Compression type terminal blocks may be used on I/O module terminal blocks only, and shall not be used elsewhere unless acceptable to the Purchaser.

3D.3.3.5 Terminal Blocks for Thermocouples. Terminal blocks for thermocouples shall be Thermo Electric 3225 Series Barrier Type or Weidmuller "W" Series or Allen-Bradley 1492-WTC3 series Thermocouple terminal blocks.

3D.3.3.6 Fused Terminal Blocks. Fused Terminal Blocks shall be Allen-Bradley Cat # 1492-H5 or Phoenix Cat # UK 6,3-HESI with LED blown fuse indicators or Phoenix Cat # UK 10.3-HESI fuse blocks. Fuse rating and type shall be determined by the Contractor.

3D.3.3.7 Din Rail Mounted Current Limiting Circuit Breakers. Din rail mounted current limiting circuit breakers for control circuits shall be Allen-Bradley Cat # 1492-CB. Specific model number shall be determined by the Contractor.

3D.3.4 Splicing Connectors. Splices in conductors other than lighting conductors shall be with compression type connectors. Splices in lighting conductors smaller than 8 AWG shall be with 3M Company "Scotchlok" twist type insulated spring connectors, Panduit JN wire joints, or acceptable equal. Splices in lighting conductors 8 AWG and larger shall be with compression type connectors.

3D.3.5 Crimping Tools. Crimping tools used to secure conductors in compression type connectors or terminal lugs shall be those made for that purpose and for the conductor sizes involved. The crimping tools shall accurately crimp the connector barrel and shall accurately crimp the conductor insulation support sleeve where provided. Crimping tools shall be provided with guides to position connectors in the tool, shall be provided with stops to prevent overcrimping, and shall be of a type which prevents the tools from opening until the crimp action is completed. Crimping tools shall be a product of the connector manufacturer or shall be as recommended by the connector manufacturer and acceptable to the Purchaser for use with the connectors. The Contractor shall establish and maintain a tool certification program to ensure that crimping tools are kept in accurate operating condition.

3D.3.6 Insulating Materials. Insulating materials for splice and termination insulation shall be in accordance with the following.

3D.3.6.1 600 Volt Cable. Insulating materials for terminal connectors or compression type splicing connectors shall consist of varnished cambric tape, rubber tape, and vinyl tape. Taping materials shall be as listed below or acceptable equal.

- Varnished Cambric Tape - 3M Company Irvington 2520
- Rubber Tape - 3M Company Scotch 130C
- Vinyl Tape - 3M Company Scotch 33+

3D.3.7 Support Grips. Cable support grips shall be either split or closed woven wire type as manufactured by The Kellems Division, Harvey Hubbell Incorporated, Stonington, Connecticut.

3D.3.8 Wire and Cable Markers. Markers for wire and cable circuits shall be of an opaque nylon material arranged to include a marker board, nonreleasing holding device, and cable fastening tail. The marker board shall not be less than 20 mm wide, 60 mm long, and 15 mils thick and shall be Panduit Corp. Part No. MP250 marker plates or acceptable equal. One side shall be roughened to hold black nylon marking ink from a fine tip pen. Identification shall be permanent and waterproof. The holding device shall be designed to allow the fastening

tail to pass around the cable through the holding device and prevent the removal of the tail without cutting it loose from the marker.

All internal wiring terminations shall be identified by printing on conductor identification sleeves. A conductor identification sleeve shall be provided on each end of each internal conductor. Each sleeve shall be marked with the opposite end destination identification. Conductor identification sleeves shall be not less than 10 mm long and shall be Bradysleeve as manufactured by W.H. Brady Company or acceptable equal. Conductor identification shall be printed on a sleeve printed from a label machine designed for conductor marking and acceptable to the Purchaser. After inscription of the conductor identification, the marking sleeve shall be coated as required to prevent smudging. Adhesive labels are not acceptable.

3D.3.9 Cable Ties. Lacing materials for field installed cable shall be nonreleasing weather-resistant white nylon ties manufactured by Thomas & Betts Company, Elizabeth, New Jersey; Panduit Corp., Tinley Park, Illinois; 3M Company; or acceptable equal.

3D.3.10 Fiber Optic Cables. Connectors for fiber optic cables shall be furnished and installed by the Contractor. Installation of the connectors shall be performed by a qualified fiber optic terminator according to the manufacturer's recommended procedures. The Contractor shall perform optic transmission tests on each fiber and shall provide the Purchaser with written reports detailing the test results.

3D.4 INSTALLATION. Conductor installation shall be in accordance with the cable manufacturer's recommendations and the articles that follow.

3D.4.1 Cable Placement. Routing of cable shall be as required.

Cable shall not be handled when the cable temperature is below the minimum temperature recommended by the manufacturer. If cable heating is required prior to placement, the cable shall be stored in a heated building in accordance with the manufacturer's recommendations for at least 24 hours. Cable shall be placed the same day it is removed from heated storage.

Immediately prior to the placement of each cable or cable group in its assigned raceway, the dimensions of the cable and raceway shall be checked to determine that the raceway is of adequate size according to the requirements of NFPA No. 70 (NEC) for new raceway. If the raceway size is inadequate, a new raceway of sufficient capacity shall be provided.

Immediately prior to the placement of each cable or cable group, the raceway route to be followed shall be inspected and ascertained to be complete in installation and free of all materials detrimental to the cable or its placement. All cable assigned to a particular duct or conduit shall be grouped and pulled in simultaneously using cable grips and acceptable lubricants.

All cable shall be carefully checked both as to size and length before being pulled into conduits or ducts. Cable pulled into the wrong conduit or duct or cut too short to rack, train, and splice as specified herein shall be removed and replaced by and at the expense of the Contractor. Cable removed from one conduit or duct shall not be pulled into another conduit or duct.

3D.4.1.1 Cable in Trays. All cable shall be carefully laid in or pulled through the tray system so that neither the cable nor the trays are damaged. Cable may be laid along the side of the tray system during placement provided it is protected from dirt, water, oil, or other detrimental materials and from mechanical injury. Cable shall be cut sufficiently long to conform to the contour of the trays, with particular attention paid to vertical inside bends. All excessive slack shall be removed from the cable so that it lies parallel to the sides of the trays. Multiple single conductor cable which constitutes a single power circuit shall be grouped together to minimize magnetic influence on other cable in the area. The cable shall be tied to the trays with nylon ties at 3 meter intervals to hold it in place. Cable clamps designed for holding the cable inside the trays shall be installed at all vertical bends.

3D.4.1.2 Cable Pulling. Fishing and pulling shall be done with flexible round metal tape, CO_2 propelled polyethylene cord, nylon rope, or manila rope.

Unless specified otherwise, or acceptable to the Purchaser, cable shall not be pulled in a single pull through two sections of raceway connected by a manhole or pull box. Cable shall be pulled out at each manhole and pull box to the length required for termination. Prior to repulling of the pulled out cable, the cable shall be thoroughly inspected, cleaned, and relubricated. Damaged cable shall be removed and replaced by and at the expense of the Contractor.

Cable may be pulled in a single pull through two sections of raceway connected by a manhole or pull box only if it can be determined by calculation to the satisfaction of the Purchaser that the pulling tension will not exceed the maximum tension allowed by the cable manufacturer.

3D.4.1.3 Cable Grips. Factory installed pulling eyes shall be used for pulling cable where they are available. Woven wire cable grips shall be used to pull all single conductor cable 2/0 AWG and larger, where pulling eyes are not available, and all multi-conductor cable. Pulling loops shall be used to pull single conductor cable smaller than 2/0 AWG. All sharp points and edges on the hardware attaching the pulling rope to the cable shall be taped to prevent snagging or damaging the raceway.

When a cable grip or pulling eye is used for pulling, the area of the cable covered by the grip or seal plus 150 mm shall be cut off and discarded when the pull is completed. When pulling loops are used, the entire loop shall be cut off and discarded when the pull is completed.

As soon as the cable is pulled into place, the pulling eyes, cable grips, or pulling loops shall be removed and any cable which was sealed shall be resealed.

3D.4.1.4 Swivels. A reliable nonfreezing type of swivel, or swivel connection, shall be inserted between the pulling rope and the cable pulling eye, grip, or loop to prevent twisting under strain.

3D.4.1.5 Feeding Tubes. A 100 mm or larger flexible feeding tube, with a removable nozzle sized to fit the ducts, shall be used in pulling all underground cable. The feeding tube shall be long enough to extend from the duct entrance to the outside of the manhole and shall be so arranged that it will be impossible for the cable to drag across the edge of the manhole ring or

any other damaging surface. The bending radius of the tube shall not be less than the minimum bending radius of the cable specified in this section under the article titled Cable Bends.

3D.4.1.6 Pulling Lubricants. Only lubricants recommended by the cable manufacturer and acceptable to the Purchaser shall be used. Lubricants shall be applied liberally and continuously during the pull.

3D.4.1.7 Inspection. The outside of each cable reel shall be carefully inspected and protruding nails, fastenings, or other objects which might damage the cable shall be removed. A thorough visual inspection for flaws, breaks, or abrasions in the cable sheath shall be made as the cable leaves the reel, and the pulling speed shall be slow enough to permit this inspection. Damage to the sheath or finish of the cable shall be sufficient cause for rejecting the cable. Cable damaged in any way during installation shall be replaced by and at the expense of the Contractor.

3D.4.1.8 Pulling Tension. The pulling tension of any cable shall not exceed the maximum tension recommended by the cable manufacturer. Pulling mechanisms of both the manual and power types used by the Contractor shall have the rated capacity clearly marked on the mechanism. Whenever the capacity of the pulling mechanism exceeds the recommended pulling tension of the cable as given by the cable manufacturer, a dynamometer shall be used to show the tension on the cable and the indicator shall be constantly watched. If any excessive strain develops, the pulling operation shall be stopped at once and the difficulty determined and corrected.

3D.4.1.9 Sidewall Pressure. To avoid insulation damage from excessive sidewall pressure at bends, the pulling tension in N/m^2 at a bend shall not exceed 20 times the radius of the bend in meters.

3D.4.1.10 Cable Bends. Tape shielded, flat tape armored, and wire armored cable shall not be bent to a radius of less than 12 times the overall cable diameter. All other cables shall not be bent to a radius of less than eight times the cable diameter.

3D.4.1.11 Supports. All cable supports and securing devices shall have bearing surfaces located parallel to the surfaces of the cable sheath and shall be installed to provide adequate support without deformation of the cable jackets or insulation.

Adequate cable end lengths shall be provided and properly placed in junction boxes and manholes to avoid longitudinal strains and distorting pressures on the cable at conduit bushings and duct end bells.

Final inspection shall be made after all cable is in place and, where supports or raceway fittings deform the cable jacket, additional supports shall be provided as directed by the Purchaser.

Additional cable protection such as a wrapping of light rubber belting, friction tape, or similar material shall be provided where required.

Cable in vertical runs shall be supported by woven wire grips in accordance with the NEC requirements, except that the distance between supports shall not be less than the following:

Conductor Size	Vertical Cable Support Spacing Copper Conductor
1/0 AWG and smaller	30 meters
2/0 AWG thru 500 Kcmil	15 meters
Larger than 500 Kcmil	10 meters

3D.4.1.12 Cable Racks. Where cable trays are not specified in manholes, cable racks shall be furnished and installed according to the drawings and as required to provide the proper cable support. Cable racks shall be installed on spacings of not greater than one meter and shall be bolt secured to permanent wall surfaces with self-drilling anchors or continuous slot concrete inserts.

3D.4.1.13 Spare Conductors. All spare conductors of a multi-conductor cable shall be routed to the bottom of the enclosure and left long enough to reach any terminal in the enclosure. Spare conductors shall be neatly coiled and tagged with the circuit number of the cable.

3D.4.1.14 Lacing. Nylon ties shall be used to neatly lace together conductors entering switchboards and similar locations after the conductors have emerged from their supporting raceway and before they are attached to terminals.

3D.4.1.15 Cable Identification. The Contractor shall identify the ends of all circuits. The Contractor shall also identify all circuits in manholes, handholes, and pull boxes.

Each marker shall bear the number of the circuit.

At terminations, the Contractor shall identify each conductor of power circuits, each multi-conductor cable, and each conductor of circuits consisting of multiple single conductors where the conductors are not otherwise identified. Markers shall be attached where the first individual conductor is routed away from the assembly. Each phase of multiphase power circuits shall be individually identified.

One end of each marker board shall remain free of the fastening tail, and the entire marker shall be so attached that it is readily visible for circuit identification.

3D.4.2 Splices. No splices shall be made in conductors for instrument circuits or control circuits without specific acceptance by the Purchaser except where required at connections to accessory devices equipped with factory installed pigtails or where high temperature wire is necessary locally to connect to a particular device. Shields may be spliced where necessary to permit connection to the station ground.

Power cable circuits may be spliced only by methods and at locations acceptable to the Purchaser. Splicing of 5 kV power circuit cables is not permitted. Splices are permitted only at junction boxes for 480 volt circuits or 240 volt circuits.

Splices shall not be made to utilize short lengths of cable nor shall they be made to provide correct lengths on cable initially cut too short for a particular circuit.

Splices, joints, and connections in cable shall be made only in pull boxes, junction boxes, or manholes unless otherwise indicated on the drawings and shall be made in accordance with the instructions of the cable manufacturer.

Splices in cable shall be prepared and insulated in a manner similar to the cable terminations specified below.

3D.4.3 Terminations. Cable shall be terminated in accordance with the following requirements:

- Train cable in place and cut squarely to required length. Avoid sharp bends.
- Remove necessary amount of cable jacket and insulation without damage to the conductor.
- Install terminals or terminal connectors as required, ensuring a firm metal-to-metal contact.
- Install high voltage cable termination kits for shielded cable rated 5 kV and above using the procedures recommended by the manufacturer of the kit being used. Coordinate with switchgear for adequate room, proper cable attachment and mounting bracket with hardware. Coordinate with cable supplier for correct termination lug and application.
- Insulate each connection of cable to an insulated conductor (whether cable, bus, or equipment bushing). The insulation shall cover all exposed surfaces of the conductors; the insulation voltage level of the completed termination shall be not less than the insulation voltage level of the connected conductors.

3D.4.3.1 Insulation of 600 Volt Cable Connections. Where connections of cable rated 600 volts or less require insulation, such as cable shields that are not terminated, all exposed conductor and connector surfaces shall be covered with tape in accordance with the following:

- One half-lapped layer of varnished cambric tape.
- A minimum of three half-lapped layers of rubber tape, elongated not more than 20 percent, applied over the varnished cambric tape.
- A minimum of three half-lapped layers of vinyl tape applied over the rubber tape. The vinyl tape shall extend a minimum of two cable diameters over the cable jacket and a similar distance over the insulation of the conductor to which the cable is connected.

3D.4.4 Tests After Placement. All insulated conductors shall be electrically tested after placement.

All circuits, including lighting circuits, shall be tested with the circuit complete except for connections to equipment. All splices, stress cones on shielded cable, and terminal connector attachments shall be complete prior to testing.

In addition to the tests performed after cable placement is complete, continuity tests and insulation tests shall be performed on all supervisory and communication cable before and after each splice is made.

Any 5 kV circuit failing to test satisfactorily shall be replaced and then retested. Any circuit lower than 5 kV shall be replaced, or repaired if allowed by the Purchaser, and then retested.

All equipment and labor required for testing shall be furnished by the Contractor.

3D.4.4.1 Continuity and Identification Tests. All insulated conductors shall be tested for continuity and conductor identification.

3D.4.4.1.1 Continuity Tests. Continuity tests shall include all tests necessary to confirm that each conductor is continuous throughout its entire length.

3D.4.4.1.2 Identification Tests. Identification tests shall include all tests necessary to confirm that the conductor being investigated originates and terminates at the locations designated in the circuit list or indicated on the drawings.

3D.4.4.2 Insulation Tests. Resistance from ground provided by the insulation on all field installed insulated conductors shall be measured.

3D.4.4.2.1 Cable Rated Below 5000 Volts. All insulated conductors, except supervisory and communication cable, rated less than 5000 volts shall be tested with a 1000 volt megger or an equivalent testing device. Insulation resistance measurements shall be made between each conductor and ground and between each conductor and all other conductors of the same circuit. Minimum acceptable resistance values shall be 500 megohms.

3D.4.4.2.2 Cable Rated Above 5000 Volts.

3D.4.4.2.2.1 Installation.

- Installation shall be in accordance with NEC.
- Use suitable lubricating compounds on the cables and wires to prevent damage to them during pulling. The compounds shall not be injurious to the cable and wire jackets, and shall not harden or become adhesive.
- Do not exceed manufacturer's written instructions pulling tensions.
- Install the materials as per written instruction by their manufacturer including precautions pertaining to air temperature during installation.
- Installation shall be accomplished by qualified personnel trained to accomplish high voltage equipment installation. All instructions of the manufacturer shall be followed in detail.

3D.4.4.2.2.2 Field Tests for Cables Rated Above 5000 Volts.

- 5 and 15kV Cables:
    - Acceptance tests shall be performed on all new cable.

- Test all cable after installation and terminations have been made, but before connection to equipment.

- High Potential Test:
  - Leakage current test shall be high potential D.C. step voltage method.
  - Prior to high potential test, test the cable and shields for continuity, shorts, and grounds.
  - High potential test shall measure the leakage current from each conductor to the insulation shield. Corona shields, guard rings, taping, mason jars, or plastic bags shall be used to prevent corona current from influencing the readings. Unprepared cable shield ends shall be trimmed back 10 mm or more for each 10kV of test voltage.

- Safety Precautions:
  - Exercise suitable and adequate safety measures prior to, during, and after the high potential tests, including placing warning signs and preventing people and equipment from being exposed to the test voltages.

- Test Voltages:
  - The D.C. test voltage for new shielded EPR cables shall be 64 kV for 15 kV and 36 kV for 5 kV class cable or maximum as per written instruction of cable manufacturer. The test voltage for existing 5 and 15 kV cables shall be 75% of the values required for new cables.

- High Potential Test Method:

  - Apply voltage in approximately 8 to 10 equal steps.
  - Raise the voltage slowly between steps.
  - At the end of each step, allow the charging currents to decay, and time the interval of decay.
  - Read the leakage current and plot a curve of leakage current versus test voltage on graph paper as the test progresses. Read the leakage current at the same time interval for each voltage step.
  - Stop the test if leakage currents increase excessively or a "knee" appears in the curve before maximum test voltage is reached.
    - Replace all cable within feeder circuit and repeat the test, with all additional cost paid by this Section.
  - Upon reaching maximum test voltage, hold the voltage for five minutes. Read the leakage current at 30 second intervals and plot a curve of leakage current versus time on the same graph paper as the step voltage curve.
    - Stop the test if leakage current starts to rise, or decreases and again starts to rise. Leakage current should decrease and stabilize for good cable.
  - Terminate tests and allow sufficient discharge time before testing the next conductor.

All above tests and inspections shall be recorded and submitted in report form, including all findings, observations, and DC HyPot graphical results. These results will be submitted to the Purchaser's representative for review and acceptance prior to energizing cables.

3D.4.4.2.3 Supervisory and Communication Cable. All insulated conductors of supervisory and communication cable shall be tested with a 500 volt megger or an equivalent testing device. Insulation resistance measurements shall be made between each conductor and the cable shielding tape and between the two conductors in each pair. Minimum acceptable resistance values shall be 500 megohms divided by the actual cable length in miles.

3D.5 CABLE REELS. Cable purchased by the Contractor shall be received, unloaded, and stored in the location designated by the Purchaser. Cable reels shall be handled and lifted by the cable reel only. Lifting devices shall not contact the cable. Cable reels shall be stored on a hard surface to prevent contact between the cable and the earth or the cable and the supporting surface. Any cable reels which sink or shift such that the cable contacts the earth or any supporting surface shall be immediately lifted and the supporting structure reworked to prevent this contact. Protective coverings furnished with the cable shall be maintained to prevent direct exposure of the cable to sunlight. Cable shall be stored so the flanges on adjacent cable reels do not contact the cable.

3D.6 CIRCUIT INSTALLATION RECORDS. The Contractor shall complete a Circuit Installation Record form for each circuit installed, and a Circuit Termination Record form for each circuit terminated. Forms used shall be acceptable to the Purchaser.

The following data shall be recorded on each Circuit Installation Record form:

- Circuit number
- Origin and destination of the circuit (From-To)
- Circuit routing by raceway number of actual installed route
- Cable type, size, and quantity
- Cable reel identification number
- Date circuit installation was completed
- Foreman of pulling crew
- Maximum pulling tension if not pulled by hand

3D.7 SUPPLEMENTAL REQUIREMENTS. The following contain additional requirements which are provided in Section 5. These requirements are applicable unless stated otherwise in this section.

A001 Miscellaneous Requirements
A002 Shipping Requirements

CABLE SPECIFICATION SUMMARY SHEET

A summary of the included cable specification sheets follows:

Type	Short Description
C3	3 conductor with ground
D1	Multi-conductor control cable
EP2	Single and multiple pair shielded cable
ET2	Single and multiple triad shielded cable
GI	Insulated ground cable
GU	Un-insulated ground cable
SIS	Switchboard and panelboard wire
TE	Single and multiple pair shielded, Type E thermocouple extension cable

CABLE SPECIFICATION SHEETS

600 VOLT	600V, 3 CONDUCTOR (WITH GROUND), FR-EPR OR FR-XLPE INSULATION, PVC JACKET (FLAME RETARDANT POWER CABLE) (UL TYPE TC)	TYPE C3

SPECIFICATIONS

REFERENCE:	ICEA S-95-658 (NEMA WC 70), ICEA T-27-581 (NEMA WC 53), IEEE 383 (ANSI N41.10).
CONDUCTOR:	CONCENTRIC-LAY, CLASS B STRANDED, UNCOATED COPPER; NORMAL MAXIMUM OPERATING TEMPERATURE 90 C (ICEA S-95-658, SECTION 2)
INSULATION:	FLAME-RETARDANT ETHYLENE-PROPYLENE RUBBER, ICEA S-95-658 (TYPE E-1 OR E-2); OR FLAME-RETARDANT CROSS-LINKED POLYETHYLENE, ICEA S-95-658 (TYPE X-1 OR X-2). INSULATION THICKNESS SHALL BE IN ACCORDANCE WITH ICEA S-95-658, TABLE 3-4, COL. B.
JACKET:	CONDUCTOR: NONE. CABLE ASSEMBLY JACKET APPLIED OVER TAPE WRAPPED CABLE CORE: BLACK POLYVINYL CHLORIDE, ICEA S-95-658 (TYPE PVC); THE MINIMUM THICKNESS SHALL BE NOT LESS THAN 80 PERCENT OF THE VALUES INDICATED BELOW. SPECIFIC SURFACE RESISTIVITY SHALL BE A MINIMUM OF 200,000 MEGOHMS WHEN TESTED IN ACCORDANCE WITH ICEA T-27-581, SECTION 2.9. IN ADDITION TO THE REQUIREMENTS OF ICEA S-95-658, ACCELERATED WATER ABSORPTION WHEN IMMERSED FOR 7 DAYS IN 75 C WATER SHALL BE LIMITED TO 25 MILLIGRAMS PER SQUARE INCH WHEN TESTED IN ACCORDANCE WITH ICEA T-27-581 (GRAVIMETRIC METHOD).
GROUNDING CONDUCTOR	ONE BARE COPPER GROUNDING CONDUCTOR IN ONE INTERSTICE IN ACCORDANCE WITH ICEA S-95-658, PARAGRAPH 5.4.
CONDUCTOR IDENTIFICATION	ICEA S-95-658, PARAGRAPH 5.3
ASSEMBLY:	THE CONDUCTORS SHALL BE CABLED TOGETHER WITH FLAME-RETARDANT POLYPROPYLENE FILLERS, AS NECESSARY, TO MAKE THE FINISHED CABLE ROUND.
FACTORY TESTS:	IN ADDITION TO THE REQUIREMENTS OF ICEA S-95-658, EACH CONDUCTOR AND THE FINISHED CABLES SHALL ALSO MEET THE FLAME TEST REQUIREMENTS PER IEEE 383 (70,000 BTU/HR) USING A GAS-BURNER FLAME SOURCE.

CABLE DETAILS

PHASE CONDUCTOR SIZE (AWG OR KCMIL)	GROUND CONDUCTOR SIZE (AWG)	AVERAGE ASSEMBLY JACKET THICKNESS (INCHES)	O.D. MAX (INCHES)
8	10	0.060	0.66
6	8	0.060	0.75
4	8	0.060	0.89
2	6	0.080	1.02
1	6	0.080	1.15
1/0	6	0.080	1.25
2/0	6	0.080	1.34
4/0	4	0.080	1.58
250	4	1.100	1.78
350	3	1.100	2.01
500	2	1.100	2.31
750	1	1.100	2.85

CABLE SHALL BE UL LISTED TYPE XHHW-2, VW-1, AND TYPE TC

A DURABLE MARKING SHALL BE PROVIDED ON THE SURFACE OF THE CABLE AT INTERVALS NOT EXCEEDING 24 INCHES. MARKING SHALL INCLUDE MANUFACTURER'S NAME, INSULATING MATERIAL, CONDUCTOR SIZE, SEQUENTIAL FOOT MARKINGS, VOLTAGE CLASS, VW-1 RATING, AND TYPE TC.

	ELCEN **Distributed Control System**	600-3-EPR/XLPE-PVC SHEET 1 OF 1
	CABLE SPECIFICATION	10/01/2001

600 VOLT	600V, MULTI-CONDUCTOR, FR-XLPE OR FR-EPR INSULATION, PVC JACKET (E-2 COLOR CODE) (FLAME RETARDANT CONTROL CABLE) (UL TYPE TC)	TYPE D1

SPECIFICATIONS

REFERENCE: ICEA S-73-532 (NEMA WC 57), ICEA T-27-581 (NEMA WC 53), IEEE 383 (ANSI N41.10), UL-44, UL-62, UL-1277.

CONDUCTOR: 16 AWG, BUNCH STRANDED (CLASS K) PER ASTM B-174 AND UL-62, NORMAL MAXIMUM OPERATING TEMPERATURE 75 C; 14 AWG, 12 AWG, OR 10 AWG, 7 STRAND, CONCENTRIC-LAY, UNCOATED COPPER; NORMAL MAXIMUM OPERATING TEMPERATURE 90 C (ICEA S-73-532, ARTICLE 2.3.3)

INSULATION: 16 AWG – XLPE, UL-1581, TABLE 50.241, 30 MILS MINIMUM AVERAGE THICKNESS PER UL-62, TABLE 6.1 (RFH-2); 14 AWG, 12 AWG OR 10 AWG - TYPE II XLPE OR TYPE II EP RUBBER, UL-44 AND ICEA S-73-532, PART 3; NOT LESS THAN 30 MILS AVERAGE THICKNESS (27 MILS MINIMUM THICKNESS).

SHIELD: NONE

JACKET: CONDUCTOR: NONE. CABLE ASSEMBLY: BLACK FLAME RETARDANT POLYVINYL CHLORIDE (PVC), ICEA S-73-532, PART 4. ASSEMBLY JACKET APPLIED OVER TAPE WRAPPED CABLE CORE. THE MINIMUM THICKNESS SHALL BE NOT LESS THAN 80 PERCENT OF THE VALUES INDICATED BELOW. SPECIFIC SURFACE RESISTIVITY SHALL BE A MINIMUM OF 200,000 MEGOHMS WHEN TESTED IN ACCORDANCE WITH ICEA T-27-581, SECTION 2.9. ACCELERATED WATER ABSORPTION WHEN IMMERSED FOR 7 DAYS IN 75 C WATER SHALL BE LIMITED TO 25 MILLIGRAMS PER SQUARE INCH WHEN TESTED IN ACCORDANCE WITH ICEA T-27-581 (GRAVIMETRIC METHOD).

CONDUCTOR IDENTIFICATION: ICEA S-73-532, APPENDIX E, METHOD 1, COLORED COMPOUNDS WITH TRACERS, TABLE E-2.
WHITE OR GREEN CONDUCTORS SHALL NOT BE PROVIDED.
TRACERS SHALL BE CONTINUOUS THROUGHOUT THE LENGTH OF CONDUCTOR. COLOR BANDS OR MARKINGS APPLIED AT DISCRETE INTERVALS ARE NOT ALLOWED.

ASSEMBLY: TWO CONDUCTOR CABLE SHALL BE FLAT. FOR THREE CONDUCTORS OR MORE, THE CONDUCTORS SHALL BE CABLED TOGHETHER WITH FLAME RETARDANT POLYPROPYLENE FILLERS, AS NECESSARY, TO MAKE THE FINISHED CABLE ROUND.

FACTORY TESTS: IN ADDITION TO THE REQUIREMENTS OF ICEA S-73-532, EACH CONDUCTOR AND THE FINISHED CABLES SHALL ALSO MEET THE FLAME TEST REQUIREMENTS PER IEEE 383 (70,000 BTU/HR) USING A GAS-BURNER FLAME SOURCE.

CABLE DETAILS

NUMBER OF CONDUCTORS	AVERAGE ASSEMBLY JACKET THICKNESS (INCHES)				O.D. MAXIMUM (INCHES)				COLOR CODE ICEA S-73-532 TABLE E-2					
	16 AWG	14 AWG	12 AWG	10 AWG	16 AWG	14 AWG	12 AWG	10 AWG	COND NO.	BASE	TRACER	COND NO.	BASE	TRACER
2	0.045	0.045	0.045	0.045	0.38	0.43	0.47	0.53	1	BK	-	11	BN	BK
3	0.045	0.045	0.045	0.045	0.40	0.45	0.50	0.55	2	R	-	12	BK	R
4	0.045	0.045	0.045	0.060	0.44	0.48	0.54	0.63	3	BL	-	13	BL	R
5	0.045	0.045	0.060	0.060	0.48	0.52	0.62	0.68	4	O	-	14	O	R
6	0.045	0.060	0.060	0.060	0.52	0.57	0.68	0.73	5	Y	-	15	Y	R
7	0.045	0.060	0.060	0.060	0.52	0.57	0.68	0.73	6	BN	-	16	BN	R
8	0.045	0.060	0.060	0.060	0.56	0.64	0.71	0.79	7	R	BK	17	BK	BL
9	0.060	0.060	0.060	0.060	0.64	0.69	0.77	0.87	8	BL	BK	18	R	BL
10	0.060	0.060	0.060	0.080	0.66	0.74	0.82	0.97	9	O	BK	19	O	BL
12	0.060	0.060	0.060	0.080	0.70	0.78	0.88	1.00	10	Y	BK			
15	0.060	0.060	0.080	0.080	0.76	0.86	0.99	1.10						
19	0.060	0.060	0.080	0.080	0.83	1.02	1.12	1.19						

CABLE SHALL BE UL LISTED TYPE TC

A DURABLE MARKING SHALL BE PROVIDED ON THE SURFACE OF THE CABLE AT INTERVALS NOT EXCEEDING 24 INCHES. MARKING SHALL INCLUDE MANUFACTURER'S NAME, INSULATING MATERIAL, CONDUCTOR SIZE, SEQUENTIAL FOOT MARKINGS, VOLTAGE CLASS, AND TYPE TC.

	ELCEN Distributed Control System	600-MULTI-FRXLPE OR FREPR - PVC SHEET 1 OF 1
	CABLE SPECIFICATION	02/15/2002

600 VOLT	600V, #16 AWG SINGLE PAIR AND 18 AWG MULTIPLE PAIR FR-XLPE OR FR-EPR INSULATION, PVC JACKET (INDIVIDUAL PAIR AND OVERALL SHIELDED) FLAME-RETARDANT SHIELDED INSTRUMENT CABLE (UL TYPE TC)	TYPE EP2

SPECIFICATIONS

REFERENCE:	*ICEA S-82-552 (NEMA WC 55), IEEE 383 (ANSI N41.10).*
CONDUCTOR:	7 STRAND, CONCENTRIC-LAY, UNCOATED COPPER; 16 AWG – SINGLE PAIR, 18 AWG – MULTIPLE PAIR, NORMAL MAXIMUM OPERATING TEMPERATURE 90 C.
INSULATION:	FLAME-RETARDANT TYPE II XLPE OR TYPE II EP RUBBER, ICEA S-82-552, NOT LESS THAN 25 MILS MINIMUM AVERAGE THICKNESS, NORMAL MAXIMUM OPERATING TEMPERATURE 90 C.
LAY:	TWISTED PAIRS WITH 2-INCH NOMINAL LAY.
SHIELD:	SINGLE PAIR – CABLE ASSEMBLY ONLY: MULTIPLE PAIR – EACH PAIR AND CABLE ASSEMBLY: COMBINATION ALUMINUM-POLYESTER TAPE AND 7-STRAND, 20 AWG MINIMUM SIZE, TINNED COPPER DRAIN WIRE; SHIELD APPLIED TO ACHIEVE 100 PERCENT COVER OVER INSULATED CONDUCTORS. SHIELD TAPE ON PAIR ASSEMBLY SHALL BE APPLIED IN SUCH A WAY AS TO GIVE TOTAL SHIELD ISOLATION FROM ALL OTHER PAIR SHIELDS.
JACKET:	CONDUCTOR: NONE. CABLE ASSEMBLY: FLAME-RETARDANT POLYVINYL CHLORIDE (PVC), ICEA S-82-552. THE MINIMUM JACKET THICKNESS AT ANY POINT SHALL BE NOT LESS THAN 80 PERCENT OF THE VALUES LISTED BELOW.
CONDUCTOR IDENTIFICATION	ICEA S-82-552, APPENDIX E, METHOD 9A. COLORED (PIGMENTED) INSULATION, ONE CONDUCTOR BLACK AND ONE CONDUCTOR WHITE (EACH PAIR). IN ADDITION, EACH PAIR OF MULTIPLE-PAIR CABLES SHALL BE NUMBERED WITH PRINTED NUMBERS ON THE PAIR COVERING, BEGINNING WITH THE NUMBER 1.
ASSEMBLY:	THE PAIRS SHALL BE CABLED TOGETHER WITH FLAME-RETARDANT POLYPROPYLENE FILLERS, AS NECESSARY, TO MAKE THE FINISHED CABLE ROUND.
FACTORY TESTS:	INSULATED CONDUCTORS AND ASSEMBLY JACKET SHALL MEET THE REQUIREMENTS OF ICEA S-82-552. *IN ADDITION, FINISHED* CABLES SHALL MEET THE VERTICAL TRAY FLAME TEST REQUIREMENTS PER IEEE 383 (70,000 BTU/HR) USING A GAS-BURNER FLAME SOURCE.

CABLE DETAILS

NUMBER OF PAIRS	CONDUCTOR SIZE (AWG)	AVERAGE ASSEMBLY JACKET THICKNESS (INCHES)	O.D. MAXIMUM (INCHES)
1	16	0.045	0.37
2	18	*0.060*	*0.52*
4	18	0.060	0.68
8	18	0.080	0.82

CABLE SHALL BE UL LISTED TYPE TC

A DURABLE MARKING SHALL BE PROVIDED ON THE SURFACE OF THE CABLE AT INTERVALS NOT EXCEEDING 24 INCHES. MARKING SHALL INCLUDE MANUFACTURER'S NAME, INSULATING MATERIAL, CONDUCTOR SIZE, NUMBER OF PAIRS, SEQUENTIAL FOOT MARKINGS, VOLTAGE CLASS, AND TYPE TC.

	ELCEN **Distributed Control System**	600-16 SINGLE-18 MULTI-SH-PAIRS-INSTR FR-XLPE OR FR-EPR - PVC SHEET 1 OF 1
	CABLE SPECIFICATION	10/01/2001

600 VOLT	600V, #16 AWG SINGLE AND 18 AWG MULTIPLE TRIAD FR-XLPE OR FR-EPR INSULATION, PVC JACKET (INDIVIDUAL TRIAD AND OVERALL SHIELDED) FLAME-RETARDANT SHIELDED INSTRUMENT CABLE (UL TYPE TC)	TYPE ET2

SPECIFICATIONS

REFERENCE:	ICEA S-82-552 (NEMA WC 55), IEEE 383 (ANSI N41.10).
CONDUCTOR:	7 STRAND, CONCENTRIC-LAY, UNCOATED COPPER; 16 AWG – SINGLE TRIAD, 18 AWG – MULTIPLE TRIAD, NORMAL MAXIMUM OPERATING TEMPERATURE 90 C.
INSULATION:	FLAME-RETARDANT TYPE II XLPE OR TYPE II EP RUBBER, ICEA S-82-552, NOT LESS THAN 25 MILS MINIMUM AVERAGE THICKNESS, NORMAL MAXIMUM OPERATING TEMPERATURE 90 C.
LAY:	TWISTED TRIADS WITH 2-1/2 INCH NOMINAL LAY.
SHIELD:	SINGLE TRIAD – CABLE ASSEMBLY ONLY: MULTIPLE TRIAD – EACH PAIR AND CABLE ASSEMBLY: COMBINATION ALUMINUM-POLYESTER TAPE AND 7-STRAND, 20 AWG MINIMUM SIZE, TINNED COPPER DRAIN WIRE; SHIELD APPLIED TO ACHIEVE 100 PERCENT COVER OVER INSULATED CONDUCTORS. SHIELD TAPE ON TRIAD ASSEMBLY SHALL BE APPLIED IN SUCH A WAY AS TO GIVE TOTAL SHIELD ISOLATION FROM ALL OTHER TRIAD SHIELDS.
JACKET:	CONDUCTOR: NONE. CABLE ASSEMBLY: FLAME-RETARDANT POLYVINYL CHLORIDE (PVC), ICEA S-82-552. THE MINIMUM JACKET THICKNESS AT ANY POINT SHALL BE NOT LESS THAN 80 PERCENT OF THE VALUES LISTED BELOW.
CONDUCTOR IDENTIFICATION	ICEA S-82-552, APPENDIX E, METHOD 9A. COLORED (PIGMENTED) INSULATION, ONE CONDUCTOR BLACK, ONE CONDUCTOR WHITE AND ONE CONDUCTOR RED (EACH TRIAD). IN ADDITION, EACH TRIAD OF MULTIPLE-TRIAD CABLES SHALL BE NUMBERED WITH PRINTED NUMBERS ON THE TRIAD COVERING, BEGINNING WITH THE NUMBER 1.
ASSEMBLY:	THE TRIADS SHALL BE CABLED TOGETHER WITH FLAME-RETARDANT POLYPROPYLENE FILLERS, AS NECESSARY, TO MAKE THE FINISHED CABLE ROUND.
FACTORY TESTS:	INSULATED CONDUCTORS AND ASSEMBLY JACKET SHALL MEET THE REQUIREMENTS OF ICEA S-82-552. IN ADDITION, FINISHED CABLES SHALL MEET THE VERTICAL TRAY FLAME TEST REQUIREMENTS PER IEEE 383 (70,000 BTU/HR) USING A GAS-BURNER FLAME SOURCE.

CABLE DETAILS

NUMBER OF TRIADS	CONDUCTOR SIZE (AWG)	AVERAGE ASSEMBLY JACKET THICKNESS (INCHES)	O.D. MAXIMUM (INCHES)
1	16	0.045	0.40
2	18	0.060	0.67
4	18	0.060	0.78
8	18	0.080	0.95

CABLE SHALL BE UL LISTED TYPE TC

A DURABLE MARKING SHALL BE PROVIDED ON THE SURFACE OF THE CABLE AT INTERVALS NOT EXCEEDING 24 INCHES. MARKING SHALL INCLUDE MANUFACTURER'S NAME, INSULATING MATERIAL, CONDUCTOR SIZE, NUMBER OF TRIADS, SEQUENTIAL FOOT MARKINGS, VOLTAGE CLASS, AND TYPE TC.

	ELCEN **Distributed Control System**	600-16 SINGLE-18 MULTI-SH-TRIADS-INSTR FR-XLPE OR FR-EPR - PVC SHEET 1 OF 1
	CABLE SPECIFICATION	10/01/2001

600 VOLT	600V, 1 CONDUCTOR, PVC/NYLON INSULATION, NO JACKET (INSULATED GROUND CABLE)	TYPE GI

SPECIFICATIONS

REFERENCE:	UL 83, UL 1581.
CONDUCTOR:	CONCENTRIC-LAY, CLASS B STRANDED, UNCOATED COPPER; MAXIMUM OPERATING TEMPERATURE 90 C DRY OR 75 C WET.
INSULATION:	POLYVINYL CHLORIDE (PVC), UL 83. TYPE THHN AND THWN. THE MINIMUM THICKNESS SHALL BE NO LESS THAN 90 PERCENT OF THE VALUES INDICATED BELOW.
SHIELD:	NONE.
JACKET:	NYLON, UL 83.
FACTORY TESTS:	CABLE SHALL MEET THE REQUIREMENTS OF UL 83 FOR TYPE THHN AND THWN.

CABLE DETAILS

CONDUCTOR SIZE (AWG OR KCMIL)	NO. OF STRANDS	INSULATION THICKNESS (INCHES)	JACKET THICKNESS (INCHES)	O.D. MAX (INCHES)
12	19	0.015	0.004	0.14
10	19	0.020	0.004	0.18
8	19	0.030	0.005	0.24
6	19	0.030	0.005	0.28
4	19	0.040	0.006	0.35
2	19	0.040	0.006	0.42
1	19	0.050	0.007	0.48
1/0	19	0.050	0.007	0.53
2/0	19	0.050	0.007	0.58
4/0	19	0.050	0.007	0.69
250	37	0.060	0.008	0.78
350	37	0.060	0.008	0.89
500	37	0.060	0.008	1.03

CABLE SHALL BE UL LISTED TYPE THHN/THWN.

A DURABLE MARKING SHALL BE PROVIDED ON THE SURFACE OF THE CABLE AT INTERVALS NOT EXCEEDING 24 INCHES. MARKING SHALL INCLUDE MANUFACTURER'S NAME, INSULATING MATERIAL, CONDUCTOR SIZE, VOLTAGE CLASS, AND UL TYPES.

	ELCEN **Distributed Control System**	**600-1-PVC-NYLON** **THHN/THWN - GROUND** **SHEET 1 OF 1**
	CABLE SPECIFICATION	**10/01/2001**

600 VOLT	600V, 1 CONDUCTOR, BARE COPPER (UN-INSULATED GROUND CABLE)	TYPE GU

SPECIFICATIONS

REFERENCE:	ASTM B-8.
CONDUCTOR:	CONCENTRIC-LAY, CLASS B STRANDED, SOFT-DRAWN BARE ANNEALED COPPER.
INSULATION:	NONE.
SHIELD:	NONE.
JACKET:	NONE.
FACTORY TESTS:	CABLE SHALL BE TESTED IN ACCORDANCE WITH THE REQUIREMENTS OF ASTM B-8.

CABLE DETAILS

CONDUCTOR SIZE (AWG OR KCMIL)	NO. OF STRANDS	NOMINAL O.D. (INCHES)
8	7	0.164
6	7	0.164
4	7	0.232
2	7	0.292
1/0	19	0.373
2/0	19	0.419
4/0	19	0.528
250	37	0.575
350	37	0.681
500	37	0.813

	ELCEN Distributed Control System	600-1-BARE COPPER GROUND CABLE SHEET 1 OF 1
	CABLE SPECIFICATION	10/01/2001

SIS	600V, 1 CONDUCTOR, FR-XLPE OR FR-EPR INSULATION, NO JACKET (FLAME-RETARDANT AND MOISTURE-RESISTANT SWITCHBOARD AND PANELBOARD WIRE)	TYPE SIS

SPECIFICATIONS

REFERENCE:	UL 44, ASTM B-8, ASTM B-33.
CONDUCTOR:	CONCENTRIC-LAY, FLEXIBLE STRANDED, SOFT-DRAWN TINNED ANNEALED COPPER (ASTM B-8 AND ASTM B-33); MAXIMUM OPERATING TEMPERATURE 90 C.
INSULATION:	FLAME-RETARDANT CROSS-LINKED POLYETHYLENE (XLPE) OR FLAME-RETARDANT ETHYLENE-PROPYLENE RUBBER (EPR).
SHIELD:	NONE.
JACKET:	NONE.
FACTORY TESTS:	CABLE SHALL MEET THE REQUIREMENTS OF UL 44 FOR VW-1 (VERTICAL-WIRE) FLAME TEST. THE CABLE SHALL ALSO MEET THE REQUIREMENTS OF UL 44 FOR TYPES XHHW AND SIS.

CABLE DETAILS

CONDUCTOR SIZE (AWG OR KCMIL)	NO. OF STRANDS	INSULATION THICKNESS (INCHES)	O.D. MAX (INCHES)
* 18	16	0.030	0.12
* 16	26	0.030	0.14
14	41	0.030	0.15
12	65	0.030	0.17
10	104	0.030	0.20
8	133	0.045	0.28
6	133	0.060	0.37

* 18 AND 16 AWG ARE NOT UL LISTED.
** THE MINIMUM ACCEPTABLE AVERAGE THICKNESS SHALL BE NOT LESS THAN THAT INDICATED ABOVE.
WIRE SHALL CARRY THE VW-1 LISTING.

	ELCEN **Distributed Control System**	**600-1-SIS (VW-1)** **SHEET 1 OF 1**
	CABLE SPECIFICATION	**10/01/2001**

600 VOLT	600V, #16 AWG SINGLE PAIR AND MULTIPLE PAIR FR-XLPE OR FR-EPR INSULATION, PVC JACKET (INDIVIDUAL PAIR AND OVERALL SHIELDED) FLAME-RETARDANT THERMOCOUPLE EXTENSION CABLE (ANSI TYPE EX) (UL TYPE TC)	TYPE TE

SPECIFICATIONS

REFERENCE:	ANSI MC96.1, ICEA S-82-52 (NEMA WC 55), IEEE 383 (ANSI N41.10).
CONDUCTOR:	16 AWG, SOLID ALLOY, NORMAL MAXIMUM OPERATING TEMPERATURE 90 C.
INSULATION:	TYPE II XLPE OR TYPE II EP RUBBER, ICEA S-82-552, PART 3; NOT LESS THAN 25 MILS AVERAGE THICKNESS (22.5 MILS MINIMUM THICKNESS).
LAY:	TWISTED PAIRS WITH 2 INCH NOMINAL LAY.
SHIELD:	SINGLE PAIR – CABLE ASSEMBLY ONLY: MULTIPLE PAIR – EACH PAIR AND CABLE ASSEMBLY: COMBINATION ALUMINUM-POLYESTER TAPE AND 7-STRAND, 20 AWG MINIMUM SIZE, TINNED COPPER DRAIN WIRE; SHIELD APPLIED TO ACHIEVE 100 PERCENT COVER OVER INSULATED CONDUCTORS. SHIELD TAPE ON PAIR ASSEMBLY SHALL BE APPLIED IN SUCH A WAY AS TO GIVE TOTAL SHIELD ISOLATION FROM ALL OTHER PAIR SHIELDS.
JACKET:	CONDUCTOR: NONE. CABLE ASSEMBLY: FLAME-RETARDANT POLYVINYL CHLORIDE (PVC), ICEA S-82-552, PART 4. THE MINIMUM THICKNESS SHALL BE NOT LESS THAN 80 PERCENT OF THE VALUES INDICATED BELOW.
MULTIPLE PAIR IDENTIFICATION:	EACH CONDUCTOR OF EACH PAIR NUMBERED.
ASSEMBLY:	THE PAIRS SHALL BE CABLED TOGETHER WITH FLAME-RETARDANT POLYPROPYLENE FILLERS, AS NECESSARY, TO MAKE THE FINISHED CABLE ROUND.
FACTORY TESTS:	EACH CONDUCTOR AND THE FINISHED CABLES SHALL MEET THE REQUIREMENTS OF ICEA S-82-552. IN ADDITION, FINISHED CABLES SHALL MEET THE VERTICAL TRAY FLAME TEST REQUIREMENTS PER IEEE 383 (70,000 BTU/HR) USING A GAS-BURNER FLAME SOURCE.

CABLE DETAILS

NUMBER OF PAIRS	CONDUCTOR SIZE (AWG)	AVERAGE ASSEMBLY JACKET THICKNESS (INCHES)	O.D. MAXIMUM (INCHES)
1	16	0.045	0.37
2	16	0.060	0.60
4	16	0.080	0.77
8	16	0.060	0.97

CONDUCTOR MATERIAL		
ANSI TYPE	POSITIVE	NEGATIVE
EX	CHROMEL	CONSTANTAN

COLOR CODE		
POSITIVE	NEGATIVE	JACKET
PURPLE	RED	PURPLE

CABLE SHALL BE UL LISTED TYPE TC

A DURABLE MARKING SHALL BE PROVIDED ON THE SURFACE OF THE CABLE AT INTERVALS NOT EXCEEDING 24 INCHES. MARKING SHALL INCLUDE MANUFACTURER'S NAME, INSULATING MATERIAL, CONDUCTOR SIZE, NUMBER OF PAIRS, SEQUENTIAL FOOT MARKINGS, VOLTAGE CLASS, AND TYPE EX.

	ELCEN **Distributed Control System**	**600-16 AWG SINGLE & MULTI-SH-PAIRS-THERMO-EXT-EX** **FR-XLPE OR FR-EPR - PVC** **SHEET 1 OF 1**
	CABLE SPECIFICATION	**10/01/2001**

Section 3E - GROUNDING

3E.1 GENERAL. The Contractor shall design, furnish, and install grounding materials as necessary for the project and as specified herein and in accordance with the equipment manufacturer's recommendations.

3E.2 MATERIALS. All grounding materials required shall be furnished new and undamaged in accordance with the following requirements. Material quantities shall be determined by the Contractor.

Cable

Bare	Soft drawn copper, Class B stranding, ASTM B8 (for cable tray and major equipment grounding).
Insulated	Soft drawn copper, Class B stranding with green colored polyvinyl chloride insulation, UL 83, Type TW, THW, or THHN (for DCS cabinet grounding).

All clamps, connectors, bolts, washers, nuts, and other hardware used with the grounding system shall be of copper.

3E.3 INSTALLATION. Grounding system materials shall be installed according to the requirements which follow.

3E.3.1 Conductors. Exposed conductors shall be installed inconspicuously in vertical or horizontal positions on supporting structures. When located on irregular supporting surfaces or equipment, the conductors shall run parallel to or normal to dominant surfaces.

Conductors routed over concrete, steel, or equipment surfaces shall be kept in close contact with those surfaces by using fasteners located at intervals not to exceed 1 meter.

Damaged ground system conductors shall be repaired or replaced by the Contractor as directed by the Purchaser.

3E.3.2 Connections. All connections shall be made by a mechanical bolted connection.

All bolted and screwed connections shall be securely tightened.

3E.3.3 Conduit Grounding. All grounding bushings within all enclosures, including equipment enclosures, shall be wired together and connected internally to the enclosure grounding lug or grounding bus with a bare copper conductor.

Grounding bushings shall be grounded with conductors sized in accordance with NEC, but not smaller than 8 AWG.

All grounding bushings on conduit runs which are terminated at tray shall be connected to the tray grounding cable with bare copper conductor sized as specified above.

Where a conduit run is terminated at tray and the conduit carries a separate grounding conductor, this grounding conductor shall be terminated on the tray grounding cable. If the conduit run is terminated with a grounding bushing and the separate ground conductor it carries is sized in accordance with the requirements of the preceding paragraph for conduit bushing grounding, the ground conductor in the conduit run shall be continued through the conduit bushing ground connection and terminated on the tray grounding cable making unnecessary the installation of a separate conduit bushing grounding cable.

3E.3.4 Tray Grounding. A bare grounding conductor shall be installed the entire length of cable trays. The grounding conductor shall be connected to each tray section and the tray grounding system shall be connected to the station ground grid as indicated on the drawings. The grounding conductor shall be installed on the outside of the tray as shown in a detail on the Purchaser's raceway drawings.

3E.3.5 Equipment Safety Grounding (Earthing). All electrical equipment shall be connected to the ground grid with copper grounding conductor. The term "electrical equipment," as used in this article, shall include all enclosures containing electrical connections or bare conductors except that individual devices such as solenoids, pressure switches, and limit switches shall be exempt from this requirement unless the device requires grounding for proper operation. Large equipment such as metal-clad or metal-enclosed switchgear will be furnished with a grounding bus, which the Contractor shall connect to the ground grid. Most other equipment will be furnished with grounding pads and/or grounding lugs, which the Contractor shall connect to the ground grid. All ground connection surfaces shall be cleaned immediately prior to connection. The Contractor shall furnish all grounding material required but not furnished with the equipment.

Isolated logic system or single-point ground connections required for proper operation of electronic equipment shall be insulated from equipment safety ground. Such connection will be extended, using insulated cable, to a single termination point suitable for field connections, which the Contractor shall connect to the ground grid.

Where ground grid extension stingers are indicated on the drawings to be provided for connection to electrical equipment, the Contractor shall connect the bare grounding conductor to the equipment ground bus, pad, or lug. In addition to the ground grid extension stingers, a ground conductor shall be provided from the tray ground cable to the incoming line end of the ground bus in each assembly of metal-enclosed switchgear and in each motor control center. Where a ground conductor is included with the phase conductors of power circuits, the ground conductor shall be connected to the equipment grounding facilities and to the source ground bus. Where a ground conductor is not included with the phase conductors, the equipment shall be grounded by connecting a separate ground cable to the equipment grounding facilities and to the tray ground cable or source ground bus. Except where otherwise indicated on the drawings, all equipment ground conductors which are not an integral part of a cable assembly shall be sized in accordance with the requirements of NEC. All ground conductors installed in conduit shall be insulated.

Suitable grounding facilities, acceptable to the Purchaser, shall be furnished on electrical equipment not so equipped. The grounding facilities shall consist of compression type terminal connectors bolted to the equipment frame or enclosure and providing a minimum of joint resistance.

The conduit system is not considered to be a grounding conductor except for itself. No grounding conductor shall be smaller in size than 12 AWG unless it is a part of an acceptable cable assembly.

3E.4 SUPPLEMENTAL REQUIREMENTS. The following contain additional requirements which are provided in Section 5. These requirements are applicable unless stated otherwise in this section.

A001 Miscellaneous Requirements
A002 Shipping Requirements

Section 4A - SCOPE OF ON-SITE WORK

4A.1 GENERAL. This section covers the scope of the on-site installation work to be performed and the construction facilities and services to be provided by the Contractor.

4A.2 SCOPE. The Contractor shall install all control system replacement equipment, including furnishing all materials, tools, equipment, vehicles, supplies, services, labor, and supervision required to perform the complete erection, checkout, testing, and commissioning of the Contractor-furnished equipment and materials.

- Installation of Control equipment furnished in Section 3A.2.1.
- Installation of Turbine Control System equipment furnished in Section 3A.2.2.
- Installation of Junction Boxes furnished in Section 3B.
- Installation of Raceway furnished in Section 3C. Installation shall be in accordance with Section 3C.
- Installation of Conductors furnished in Section 3D. Installation shall be in accordance with Section 3D.
- Installation of grounding materials furnished in Section 3E. Installation shall be in accordance with Section 3E.

The work shall include unloading off transport; hauling; receiving, placing in, maintaining, and removing from storage; protecting from damage; erecting; installing; cleaning; adjusting; and all other work, except as specified otherwise herein, required to bring the equipment to a state of readiness for final acceptance and commercial operation.

4A.3 MISCELLANEOUS MATERIALS AND SERVICES. The Contractor shall furnish miscellaneous materials and services not otherwise specifically addressed in this article.

4A.3.1 Purchaser-Furnished Materials and Services. The Purchaser will furnish the following materials and services:

None.

4A.3.2 Furnished by the Contractor.

- Field office furnishings, supplies, communications services, clerical/administrative support, office equipment, locker facilities, potable water, portable toilets, site transportation, or other as may be required.
- Trash services and containers.
- Wedges, leveling blocks for soleplates, and shims for leveling.
- Welding rods.
- All nuts, bolts, gaskets, special fasteners, etc., between components and equipment furnished under these specifications.
- Temporary equipment and lighting required for power distribution, erection, cleaning, specified testing, and startup of the equipment.
- Cranes and other lifting equipment.
- Application of all lubricants.
- Steel equipment bases.

- Solvents and cleaning materials.
- Touchup paints.
- Supply and placement of any grout and grouting materials required.
- All erection tools, special tools, and test equipment required for erection, testing, startup, and operation of the equipment that are not included with the maintenance tools, including shipping costs to and from job site.
- Cribbing and shoring for erection and for materials in storage.
- Scaffolding, staging, ladders, flooring, runways, and any other temporary construction required for execution of the work, including temporary flooring and handrail, in areas where permanent facilities are left out for erection.
- Other miscellaneous materials and services needed to complete the work.
- Supply and erection of structural steel bolting materials and welding between equipment furnished under these specifications and/or existing structural steel.
- Expansion or epoxy grouted anchors for attachment of equipment to existing concrete where embedded anchor bolts are not provided.
- Rainhoods and/or weathertight flashing for all Contractor installed chutework passing through tunnel or structure roofs or walls.
- All bonding and grounding conductors and their installation for new chutework.

4A.4 WORK UNDER SEPARATE CONTRACTS. There is not any work under separate Contracts.

<<Note to Spec Developer. If other work is ongoing during the installation outage, generally list that work here>>

4A.5 CONSTRUCTION MANAGEMENT REQUIREMENTS. While on the project site, the Contractor and his subcontractors shall actively participate in and adhere to the Purchaser's project management requirements, job rules and conduct, fire protection and safety procedures, and all other procedures initiated by the Purchaser's Construction Manager for the purpose of maintaining jobsite administrative control. The Contractor and his subcontractors shall attend project management meetings or other meetings when deemed necessary by the Purchaser's Construction Manager.

Section 4B - CONSTRUCTION SCHEDULE

4B.1 GENERAL. This section covers the schedule and scheduling requirements for performance and completion of the work included under this Contract.

4B.2 CONSTRUCTION SCHEDULE. Time of completion is of the essence of the contract. The Contractor shall comply with the dates established in the detailed construction schedule agreed to by the Purchaser and the Contractor.

4B.2.1 Milestone Dates. The milestone dates listed on the schedule included in Section 1C of these specifications are associated only with the major items of work under this Contract or indicate key interface dates. The completion dates indicated are essential to the work under this Contract and to the coordination and continuity of all work at the site.

The listing of activities and dates is not intended to be a complete or detailed listing of all work under this Contract or of all interfaces with the work of the Purchaser or of other contractors.

It is understood and agreed that the dates shown in Section 1C are the latest feasible completion dates and that earlier dates may be attained as agreed to by the Purchaser and the Contractor.

4B.3 CONTRACTOR'S DETAILED SCHEDULE. The Contractor shall submit a detailed construction schedule at least 120 days prior to the start of any construction work. The detailed schedule shall be based upon the dates specified in the construction schedule included in Section 1C and input from the Purchaser.

The detailed construction schedule shall be in a form acceptable to the Purchaser.

The detailed construction schedule shall contain all activities of the construction plan, including acquisition and installation of special equipment and materials. For all equipment and materials fabricated or supplied by the Contractor especially for this project, the schedule shall include the sequence of activities including issuance of purchase orders, preparation of shop drawings, preparation of construction package documents, fabrication, testing, delivery, and installation milestones. Each activity shall be identified on the schedule by a descriptive title and shall be assigned an estimated number of working days required and an expected completion date.

The Contractor is responsible for determining the sequence and time estimates of the detailed daily construction activities; however, the Purchaser reserves the right to require the Contractor to modify any portion of the schedule the Purchaser determines to be impractical, infeasible, or unreasonable, and as required to coordinate the Contractor's activities with those of plant operations or other contractors and to assure the completion of the work by the stipulated date.

Schedules returned to the Contractor for revision or correction shall be resubmitted for review within 7 calendar days. Upon acceptance by the Purchaser of the detailed schedule of activities, the Contractor will be responsible for maintaining such schedule. Any subsequent

alterations to the approved schedule logic or durations shall be approved by the Purchaser prior to implementation.

During pre-construction, each week the Contractor shall submit a complete list of all deviations from the detailed construction schedule to reflect the actual progress of the work, together with his proposed actions to alleviate any delays caused by the deviations.

During construction, the Contractor shall report deviations from the schedule in daily meetings with Purchaser's Project Coordinator. The Contractor shall maintain a daily updated schedule and shall make this schedule available for review by the Purchaser.

4B.4 COORDINATION. The Contractor shall coordinate his work with the Purchaser's operation of the generating station and shall cooperate fully with the Purchaser in maintaining orderly progress towards completion of the work as scheduled. The control system replacement project requires the Contractor to perform the scope of work in the Purchaser's operating facility. The performance of the scope of work by the Contractor in the operating facility shall be coordinated and scheduled with the Purchaser to assure minimum interference with normal operation. The Purchaser's decision regarding priority between the Contractor's work, plant operation, and the work of other contractors at the project site shall be final and shall not be cause for extra compensation or extension of time, except where extension of time is granted because of actual and unavoidable delay.

The Contractor shall keep himself and his subcontractors advised at all times during the course of construction as to the status of plant operation and the outage and control system tuning dates.

The Purchaser will, upon written request by the Contractor, furnish information which may be available to the Purchaser regarding the status of the outage and control system tuning dates.

Section 4C - CONSTRUCTION SERVICES

4C.1 CONSTRUCTION PLANT AND TEMPORARY FACILITIES. The Contractor shall abide by the Purchaser's on-site rules and shall furnish all construction plant, utilities, temporary facilities, equipment, materials, and supplies required for prosecution of the work, but which will not be incorporated in the completed work, unless otherwise specified herein.

Unless otherwise specified, Contractor shall furnish and assume full responsibility for all materials, equipment, labor, transportation, construction equipment and machinery, tools, appliances, fuel, power, light, heat, telephone, water, sanitary facilities, temporary facilities and all other facilities and incidentals necessary for the furnishing, installing, performance, testing, commissioning, and completion of the control system replacement project.

All temporary structures and facilities furnished by the Contractor shall remain the property of the Contractor and shall be maintained throughout the construction work. When the construction work is completed, all such temporary structures and facilities shall be removed from the site and the area shall be restored to its original condition.

All construction and plant facilities shall be in first class condition and shall be of the proper type and size to perform the work. The plant facilities shall be regularly and systematically maintained throughout the work to ensure proper, efficient operation. Plant facilities that are inadequate or improperly maintained shall be promptly modified, repaired, or removed from the site and replaced.

Temporary structures for offices, change houses, warehouses, and other uses for the Contractor or his subcontractors shall be provided by the Contractor using materials, design, and construction acceptable to the Purchaser. Suitable construction trailers may be used in lieu of temporary structures, subject to the Purchaser's acceptance. Such structures or trailers shall be placed only in locations assigned by the Purchaser.

Because of the limited space available on-site, construction trailers used for office, change, and tool storage space shall be located in areas designated by the Purchaser. The Contractor shall be responsible for allocating the available space for use by his personnel and all subcontractors of the Contractor.

If it becomes necessary at any time during the performance of the work to move temporary structures, materials that are to enter into the construction, or equipment that has been temporarily placed, the Contractor responsible for said structures, materials, or equipment, when so directed by the Purchaser, shall move or cause the same to be moved without additional charge.

4C.1.1 Scaffolding. All Contractor-furnished scaffolding, runways, flooring, and other temporary construction shall be self-supporting throughout and shall be rigidly built so as to support safely the weight of all materials, apparatus, equipment, and construction personnel to be placed thereon as required by federal, state, and local laws. The Contractor shall construct scaffold using only personnel trained and certified in the proper construction and inspection of scaffolding.

All scaffolding shall be subject to approval by the Purchaser and shall meet or exceed Purchaser's standards and OSHA design standards for safety and adequacy.

4C.1.2 Fall Protection. Contractor shall comply with OSHA Fall Protection Standards without exemption. The latest version of OSHA Instruction Standard 3-3.1 shall be interpreted as applicable to protect employees exposed to falling hazards. Fall protection shall include, but shall not be limited to, the following:

Safety Belts, Lifelines, and Lanyards	29CFR:1926.28(a) 1926.104
Safety Nets and Flooring Requirements	29CFR:1926.28(a) 1926.105(a) 1926.750(b)(2)(i)
Falling Hazards to the Exterior of Buildings	29CFR:1926.28(a) 1926.105(a)

4C.1.3 Crane Inspections. All Contractor-furnished cranes on the Project Site shall be inspected monthly by a competent crane inspector. Inspection results shall be recorded on a Monthly Crane Inspection Report form, which shall be submitted by the fifth working day of each month. Inspection Report forms may be obtained from Construction Manager.

Additionally, Contractor shall submit a current annual crane inspection report for each crane used on the Project Site, prior to placing the crane in service.

If Contractor fails to submit the specified monthly or annual reports or submits reports that contain errors, misrepresentations, or falsifications of facts, use of the crane covered by such reports shall be stopped until the violation is corrected.

4C.2 ON-SITE OPERATIONS. The Contractor shall perform all necessary on-site operations required for completing the control system replacement project.

Any method of work suggested by the Purchaser, but not specified, shall be used at the risk and responsibility of Contractor, and the Purchaser will assume no responsibility therefor. Contractor alone shall be responsible for the safety, adequacy, and efficiency of his construction plant, equipment, and methods.

4C.2.1 Cleanliness. Contractor shall keep the inside of structures and surrounding grounds clean and free from trash and debris and shall employ sufficient and special personnel to continuously clean his work areas each working day. Contractor shall cooperate with the Purchaser and other contractors to keep the entire construction site clean including sweeping the

floors, collecting and disposing of trash, and all other functions required to keep the site clean.

Materials and supplies shall be stored in locations which will not block accessways, and arranged to permit easy cleaning of the area. In areas where equipment might drip oil or cause other damage to the floor surface, a protective cover of heavy gauge, flame resistant, oilproof sheeting shall be provided between the equipment and the floor surface. This requirement is applicable to both finished and unfinished floors.

All hoses, cables, extension cords, and similar materials shall be located, arranged, and grouped so that they will not block any accessway and will permit easy cleaning and maintenance. At the close of each workweek and at the close of each day preceding a holiday, all such items shall be removed from the construction area and stored in Contractor's warehouses or other storage areas.

Promptly upon the completion of the Work, all Contractor-owned materials, construction plant, and all scrap, trash, waste materials, and debris resulting from the Work shall be removed from the Project Site. Contractor shall thoroughly clean the Work, removing all accumulations of dust, scraps, waste, oil, grease, weld spatter, insulation, paint, and other foreign substances. Surfaces damaged by deposits of insulation, concrete, paint, weld metal, or other adhering materials shall be restored.

Remaining Purchaser-furnished materials, if applicable, shall be stored on or removed from the project site as directed by Purchaser.

In the event of conflict between contractors concerning cleaning responsibilities, Purchaser will determine the responsibility and assign the cleanup work. The decision thus made will be final and binding and the responsible contractor shall promptly perform the disputed work. In the event that Contractor fails to comply with the cleanliness requirements specified herein or to perform assigned cleanup work, Purchaser reserves the right to perform the necessary cleaning work under separate contract and assess Contractor for the cost of all such cleanup work.

4C.2.1.1 Trash Collection and Disposal. The Contractor shall provide a truck mounted trash receptacle for use by the Contractor and shall empty the trash container as needed. The Contractor shall also supply and maintain all other trash containers necessary to maintain a clean and safe work area. The Contractor shall not use these trash receptacles for any hazardous waste.

All petroleum products, thinners, solvents, or other items considered as hazardous materials shall be disposed of by means of an acceptable hazardous material process meeting the contract agreement, Purchaser policies, and all applicable laws and regulations.

4C.2.2 Fire Protection. Contractor shall practice good housekeeping and use construction procedures which minimize fire hazards to the extent practicable. Combustible debris and waste materials shall be collected and removed from the project site as provided under the article entitled Cleanliness. Fuels, solvents, and other volatile or flammable materials shall be stored away from the construction and storage areas in well marked, safe containers.

Unless otherwise specified for a particular application, untreated canvas, paper, plastic, and other flammable flexible materials shall not be used on the project site. Such materials covering equipment or materials delivered to the project site shall be removed and replaced with an acceptable waterproof and flame resistant covering before storing or moving such equipment or materials into the construction area.

Corrugated paper and fiberboard cartons will not be permitted in the construction area for the storage or handling of materials. Such cartons delivered to the construction area shall be immediately unpacked and removed from the project site. Replacement materials for covering shall be waterproof and flame resistant.

Combustible formwork, scaffolding, planking, and similar materials essential to execution of the work shall be treated for fire resistance or otherwise protected against combustion resulting from welding sparks, cutting flames, and similar fire sources.

Temporary heating facilities shall not be left unattended.

Contractor's supervisory personnel and a sufficient number of workmen shall be instructed in proper methods for extinguishing fires and assigned specific fire protection duties. When trained personnel leave the project site, new personnel shall be trained. Personnel shall be instructed in the selection and operation of appropriate fire extinguishers for each type of fire which might be encountered.

Contractor shall provide adequate fire protection equipment in each warehouse, office, and other temporary structure, and in each work area as specified herein. Access to sources of fire water shall be identified and kept open. Suitable fire extinguishers shall be provided in enclosed areas, in areas which are not accessible to fire water, or in areas exposed to fire that cannot be safely extinguished with water. Fire extinguishers shall be suitable for extinguishing types of fires anticipated in the area to be protected. In areas where more than one type of fire might occur, appropriate fire extinguishers shall be provided for each fire type. Extinguishers shall be placed in convenient, clearly identified accessible locations.

No flame cutting or welding in finished areas will be permitted without permission from the Purchaser.

Contractor alone shall be responsible for providing adequate fire protection for his work. Failure of the Contractor to comply with, or Purchaser to enforce, the above requirements shall not relieve Contractor from any responsibility or obligation to provide such protection.

4C.2.3 Security. Contractor shall be responsible for all materials and equipment in his custody or placed in the work and shall employ security methods to ensure their protection from theft, vandalism, fire, and all other damage and loss.

Contractor shall cooperate with Purchaser regarding security measures instituted at the project site.

4C.2.4 Construction Area Limits. Purchaser will designate the boundary limits of access roads, parking areas, storage areas, and construction areas, and Contractor shall not trespass in or on areas not so designated. Contractor shall be responsible for keeping his personnel

out of areas not designated for Contractor's use, except, in the case of isolated work located within such areas, Purchaser will issue permits to specific Contractor personnel to enter and perform the work.

Only vehicles owned and insured by the Contractor or an approved subcontractor will be allowed inside the plant perimeter. All other Contractor employees shall park their vehicles outside the fence perimeter in a location specified by the Purchaser.

Contractor's personnel shall enter the project site only through the craft gate as designated by the Purchaser.

The Contractor shall be responsible for transporting their employees to and from the job site. **The Contractor shall not use the back of trucks for employee transport.**

Contractor shall mobilize in the assigned construction mobilization area.

Contractor's personnel and their vehicles shall be subject to search at the discretion of plant security personnel.

4C.2.5 Protection of Work. Except as otherwise agreed by Purchaser, the Contractor shall be solely responsible for the protection of the work until its final acceptance by Purchaser.

Contractor shall have no claim against Purchaser because of any damage or loss to the work and shall be responsible for the complete restoration of damaged work to comply with the contract documents.

In the event the work is damaged by another party not under his supervision or control, Contractor shall make his claim directly with the party involved. Such claim shall not be cause for delay in the restoration of the damaged work. Contractor shall restore the work immediately and the cost thereof will be assigned pending the resolution of the claim.

4C.2.6 Protection of Concrete Surfaces. Concrete floors and other concrete surfaces shall be protected from chipping, gouging, scratching, staining, and other damage. Damaged sections shall be repaired or removed and replaced subject to Purchaser's discretion and acceptance.

Heavy planks and mats shall be placed under equipment and materials being stored, moved, assembled, or installed on or above concrete floor surfaces. Nonflammable, oil-resistant coverings shall be used to protect concrete surfaces from staining.

4C.2.7 Protection of Grating and Stair Treads. Floor gratings and stair treads shall be protected against damage from heavy loads, movement of equipment, materials, flame cutting, welding, and other similar construction damage. Where heavy equipment or material loads are to be stored or moved over gratings, such loads shall be supported directly from the structural supports and shall not be allowed to bear on the gratings. Damaged sections shall be repaired or replaced subject to Purchaser's discretion and acceptance.

4C.2.8 Protection of Electrical Raceway, Cable, and Lighting Fixtures. Contractor shall protect electrical raceway, cable, lighting fixtures, and associated support systems against damage from movement of equipment and materials, welding, flame cutting, and other construc-

tion damage. Raceway and supporting structures for raceway and lighting fixtures shall not be used as access scaffolding at any time. Whenever welding or flame cutting operations occur above or near raceways, cables, or lighting fixtures not shielded from such operations by concrete floors or other protective covers, Contractor shall protect such raceways, cables, and lighting fixtures from damage by means of fire-resistant boards or blankets. Damaged materials shall be repaired or replaced subject to the Purchaser's discretion and acceptance.

4C.2.9 Use of Crane and Hoisting Equipment. The turbine room crane and hoisting facilities in the power plant will be reserved for the erection of equipment as designated by Purchaser.

The use and custody of the crane and hoists for handling equipment will be scheduled and assigned by Purchaser to optimize its service to the Project. Such scheduling and assignment shall not relieve Contractor from responsibility for prosecuting the Work in accordance with the contract schedule and shall not be cause for claim for extra compensation or time extension.

The Contractor shall be responsible for all rigging. The crane shall be operated only by a qualified crane operator.

4C.2.10 Use of Elevators. The use of the plant elevator will be permitted.

4C.3 CONSTRUCTION UTILITIES. Construction utilities required for the execution of the work shall be provided by the Contractor or the Purchaser as herein specified. All facilities for construction utilities must meet applicable city codes.

Purchaser will, at its expense, arrange for, develop, and maintain the plant, facilities, utilities, and services specified as Purchaser-furnished on-site. Purchaser-furnished facilities will be concurrently used by others; therefore, Contractor shall not make unreasonable demands on such utilities and services. While reasonable efforts will be made to maintain supply continuity, such continuity cannot be guaranteed. Contractor shall have no claim against Purchaser for any loss or inconvenience Contractor may suffer because of supply interruption.

4C.3.1 Telephone. The Contractor shall provide his own telephone service.

4C.3.2 Water. The Contractor shall provide a sanitary drinking water system for his employees, including water coolers, ice, disposable drinking cups, and a trash can at each water cooler. Each cooler shall be emptied, cleaned and refilled at the start of each day.

The Purchaser shall provide service water for Contractor's general construction use. The Contractor shall provide all piping, valves, and hoses as required to distribute the water for their use.

4C.3.3 Construction Power and Lighting. The Purchaser will provide 240 volt power. The Purchaser will furnish a 200 amp disconnect switch at a location to be determined by the Purchaser at a later date. The Contractor shall connect to the Purchaser's supply using fused disconnect switches or circuit breakers in raintight enclosures and shall provide all wiring, equipment, and devices required to transform and distribute power for his use.

The Purchaser's power supply will not be ground fault circuit interrupter (GFCI) protected. The Contractor shall provide GFCI units as required for any and all temporary wiring of portable equipment.

The Purchaser will provide general area lighting.

The Contractor shall provide all other lighting required for the safe, efficient execution of his work and for the security of his work and property.

4C.3.4 Compressed Air. The Contractor shall provide all portable compressors, hoses, piping, and other apparatus required for supplying compressed air required for prosecution of his work. The Purchaser will not supply compressed air for construction use.

4C.3.5 Sanitary Facilities. The Contractor shall furnish and maintain a system of portable toilets for the use of his employees. The chemical toilets shall be furnished in numbers and locations required to adequately and conveniently serve the needs of his employees and as required by state and local regulations. Maintenance of the chemical toilets shall consist of daily inspection, cleaning, and replenishment of chemicals.

Construction personnel will not be permitted to use the permanent plant toilet, washroom, or locker room facilities.

Section 4D - RECEIVING, HANDLING, AND STORAGE

4D.1 GENERAL. All equipment and materials will be received, unloaded, and placed into storage by the Contractor. The Contractor shall be responsible for receiving, unloading, handling, and storage of equipment and materials until final acceptance of the Contractor's work.

The Contractor shall provide all required storage facilities for Contractor-furnished equipment and materials. Access to these storage facilities shall be made available to the Contract Administrator.

4D.2 HAZARDOUS MATERIALS. For all shipments of Contractor-furnished equipment or materials arriving at the jobsite, the Contractor shall provide the documentation required including Material Safety Data Sheets for HAZARDOUS MATERIALS.

4D.3 RECEIVING. The Contractor shall take immediate custody of all materials and equipment received in good condition and shall thereafter be solely responsible for any damage or shortage until final acceptance of the Contractor's work. Receipt inspection reports shall be provided to the Contract Administrator.

Equipment and materials shall be received only between the hours of 8 a.m. and 5 p.m., Monday through Friday, unless other arrangements have been made with the Purchaser.

The Contractor shall be responsible for the prompt unloading of all equipment and materials received into his custody.

The Contractor shall maintain a current, accurate inventory and record of location for all equipment and materials in his custody.

4D.4 HANDLING. The Contractor shall handle all equipment and materials carefully to prevent damage or loss, shall store them in an orderly manner, shall keep adequate and convenient records of their location, and shall keep a continuously accurate inventory.

The use of bare wire rope slings for unloading and handling materials and equipment is prohibited except as recommended by the equipment manufacturer.

The Contractor shall handle and load all returnable packing boxes, special handling devices, and cable reels for materials and equipment and shall prepare shipping papers therefor, if required. All such materials shall be returned as promptly as possible.

4D.5 STORAGE. Stored equipment and materials shall be adequately supported and protected to prevent damage. Equipment shall be moved into the permanent building or onto its permanent foundation as soon as construction will permit.

Stored materials and equipment shall not be allowed to contact the ground. In warehouses that do not have dry concrete or suspended floors, materials and equipment shall be stored on platforms or shoring.

Strip heaters and similar heating devices furnished with electrical equipment shall be electrically connected to provide protection during storage. Heaters shall be energized immediately upon placement of the equipment in storage, and maintained in an energized condition until they can be energized from a permanent electrical connection. If permanent electrical power is not available when the equipment is installed in its permanent location, electrical equipment requiring strip heaters and similar heating devices shall be suitably connected to a reliable temporary power source.

All openings in equipment and piping not stored under weatherproof covers shall be closed to prevent entrance of dirt or moisture during storage.

All platforms, enclosures, shoring, and weatherproof coverings for storage use shall remain the property of the Contractor and shall be removed upon completion of the work.

4D.5.1 Indoor Storage Facilities. Indoor storage furnished by the Contractor shall consist of suitable construction trailers or portable enclosures and shall be weathertight, well ventilated, and secure against theft and vandalism. Equipment and materials shall be placed on shoring to permit air circulation under the stored item. Access doors shall be adequate to accommodate the movement and handling of materials and equipment to be stored and shall be equipped with secure locks.

Indoor storage facilities shall be acceptable to the Purchaser.

4D.5.2 Open Platforms. Open platforms shall be Contractor constructed from sound lumber not less than 1.25 meters nominal thickness. Open platforms shall be adequately constructed to support the loads imposed by the stored materials and equipment. Platforms shall be level, shall be supported on concrete block piers, and shall be not less than 500 mm above grade.

Shoring for storage of materials and equipment shall utilize sound timbers not less than 150 mm by 200 mm nominal size. Shoring shall be arranged to provide 200 mm of clearance above grade.

4D.5.3 Coverings. Weatherproof coverings for outdoor storage shall use a waterproof, flame resistant type sheeting. Sheeting widths shall be the maximum practicable and, if necessary, widths may be built up by using waterproof taped splices. The sheeting shall be carefully placed and tied down to prevent moisture from entering the laps and to prevent wind damage to the coverings.

4D.5.4 Storage Methods. Except as otherwise specified, the storage method to be used for various materials and equipment shall be determined as follows:

- Equipment and materials which incorporate electrical equipment or which have finish painted surfaces, and other items which would be damaged by outdoor exposure, shall be stored indoors. When such storage would present an unreasonable building space or volume requirement, the equipment or materials may, when acceptable to the Purchaser, be stored under weatherproof coverings on shoring or platforms. The coverings shall cover the top and sides of the equipment, shall be lapped to shed water, and shall be fastened securely around the base of the equipment.

- All small loose items which could be easily lost, stolen, broken, or misused shall be stored indoors.
- All other equipment and materials shall be stored on open platforms or shoring.

All storage methods shall be acceptable to the Purchaser.

Section 4E - MODIFICATIONS TO EXISTING FACILITIES

4E.1 GENERAL. This section covers the designing, furnishing, and installation of the equipment and materials necessary for modifications to existing equipment to provide a complete installation. The Contractor shall be responsible for all work necessary to complete the control system replacement project, unless otherwise specified.

All equipment, materials, and labor not specifically stated in this section as being Purchaser-furnished, but which are required to complete the modification work as specified herein, shall be furnished by the Contractor.

This section is not intended to identify all general construction interfaces. Methods and procedures for accomplishing some modifications are not described in detail to permit the Contractor maximum flexibility to adapt to field conditions; however, all methods and procedures shall be acceptable to Purchaser.

Where construction activities will produce water, dust, or debris, covers shall be placed over existing panels and electronic cabinets. The covers shall protect the panels and cabinets and shall allow for adequate ventilation and access by plant personnel.

The Contractor may use any source of available information but shall verify design details of existing equipment by sufficient field surveys to assure accurate match of dimensions, locations, materials, wiring, shapes, colors, and other pertinent details.

4E.1.1 Coordination of Modification Work. The performance of all modification work to existing facilities shall be coordinated and scheduled with the Purchaser to assure minimum interference with normal operation. Modification work that might affect the Purchaser's site facilities, power system operation, or unit operation shall be performed only at times approved by the Purchaser. Complete cooperation between the Contractor and the Purchaser must be maintained.

In the event that it is necessary for the Contractor to interrupt the power supply or impose abnormal operating conditions on the Purchaser's power system, such procedure must be approved by the Purchaser and a complete understanding and agreement must be reached by all parties concerned, well in advance of the time scheduled for such operation. Such understanding shall be definite as to date, time of day, and length of time required.

The Contractor shall be responsible for paying all regular time and overtime labor costs arising from the necessity to perform work, which affects the Purchaser's system facilities, at times other than regular working hours.

4E.2 DISPOSAL OF RAZED ITEMS. All electrical equipment, instrumentation, materials, wire, conduit, and miscellaneous items removed shall remain the property of the Purchaser. All razed items not specified to be reinstalled shall be turned over to the Purchaser, or disposed by the Contractor as directed by the Purchaser. Items that have been removed from the existing installation shall not be reinstalled at other locations as part of the work under these specifications.

4E.3 PURCHASER-FURNISHED MODIFICATIONS TO EXISTING FACILITIES. The Purchaser will perform the following modifications to the existing facility in support of the control system replacement project.

None.

4E.4 CONTRACTOR-FURNISHED MODIFICATIONS TO EXISTING FACILITIES. The Contractor shall design, furnish, and install all necessary modifications to existing facilities required for a complete control system replacement. All modifications shall be reviewed and approved by Purchaser prior to Contractor's performance of the modification.

The Contractor shall develop and issue revised existing plant drawings to show modifications to existing facilities. Modification to existing plant circuit lists is required. These drawings shall be kept updated by the Contractor during construction, and issued to the Purchaser with the as-built documentation at the completion of construction. The Contractor shall furnish a marked copy of these drawings to the Purchaser upon turnover of equipment to the Purchaser's operating personnel.

4E.4.1 Revisions to Existing Cable and Raceway. Installation of equipment will require revisions to the existing plant cables and raceway. Revisions will include de-terminating and re-terminating circuits, de-terminating and abandoning or removing circuits, and disconnecting and removing existing conduit and associated raceway items. All circuits being de-terminated shall be checked to make sure they are de-energized prior to disconnecting the circuit.

4E.4.1.1 De-terminating and Abandoning Circuits. Circuits which are to be de-terminated and abandoned shall be disconnected and tagged with the existing circuit number. Circuits shall be left their entire length until checkout is complete. This will allow the circuit to be reused if necessary. After checkout is complete, the Contractor shall cut off that portion of the circuit which is easily accessible, or else neatly coil, tag, and place the circuit ends such that they will not interfere with access to or maintenance of any devices.

4E.4.1.2 Disconnecting Existing Conduit. For existing field devices that require new circuits, the Contractor shall disconnect the existing cable and conduit and remove the flexible conduit connection or first section of rigid conduit to allow use of the existing conduit hubs or openings. The remaining existing cable shall be removed or abandoned. Any remaining existing conduit that is empty after cable removal shall be removed. Associated conduit supports, fittings, and pull boxes shall be removed also.

4E.4.2 Modifications to Existing Consoles, Control Panels, and Cabinets. The Contractor shall design, furnish, and install all modifications to existing consoles, control panels, and cabinets. The Contractor shall remove existing equipment and install new equipment as required for a complete control system replacement. The floor under a completely removed panel or cabinet must be refinished to match the existing floor. The Contractor shall design, furnish, and install any wiring, power supplies, raceway, and other materials for a complete installation. Methods for modification to existing control panels and cabinets shall be acceptable to the Purchaser.

Penetrations in existing control panels and cabinets shall be repaired and painted to match the existing equipment. New penetrations shall be furnished and installed as required for a complete installation. Control panels and cabinets shall be refinished as necessary to remove any marks, abrasions, scratches, or other damage to the finish due to removal or installation of equipment. The finish and color shall match that of the existing control panel or cabinet.

The Contractor shall modify existing internal wiring in existing consoles, control panels, and cabinets as required for the control system replacement project. The Contractor shall remove internal wiring no longer required. New field wiring to existing control panels and relay cabinets shall be terminated on field terminal blocks, as described in Section 3D, with the exception of fiber-optic and prefabricated computer cables. Internal wiring shall be terminated and marked as specified in Section 3D.

Modifications to existing control panels and relay cabinets shall be acceptable to the Purchaser.

4E.4.3 Modifications to Existing Wiring and Raceway. The Contractor shall design, furnish, and install all modifications to existing wiring and raceway. The Contractor shall design and issue revised existing plant drawings to show modifications to existing field wiring, including power sources.

Raceway installation shall be as specified in Section 3C.

Cable installation and termination shall be as specified in Section 3D.

4E.4.4 Fire Stop. After all modifications have been performed, the Contractor shall repair any floor openings that have been disturbed. Any existing fire stop material in cable access holes that has been disturbed or removed shall be replaced. New penetrations shall also be filled with fire-stop material.

4E.5 WORK AROUND EXISTING EQUIPMENT. Portions of the Contractor's work will require work in and around existing equipment that is in service. The Contractor shall exercise care to ensure that his actions do not damage existing equipment or cause the existing equipment to be taken out of service inadvertently.

Control panels, cabinets, and existing cable tray shall not be used as ladders, scaffold, or work surfaces. The Contractor shall provide all ladders and scaffold required for access to overhead trays, raceways, and devices.

Where construction activities will produce dust or debris, covers shall be placed over existing panels and electronic cabinets. The covers shall protect the panels and cabinets and shall allow for adequate ventilation and access by plant personnel.

The Contractor shall utilize methods of panel cutting, welding, smoothing, painting, and other repair which prevent metal filings or fumes from damaging equipment which will continue in service after panel modification.

The Contractor shall provide temporary ventilation to eliminate fire hazard and personnel injury while painting operations are being performed.

Section 4F - CHECKOUT AND COMMISSIONING

4F.1 GENERAL. This section describes and defines the Contractor's requirements for checkout, testing, and commissioning of the equipment installed. All equipment installed by the Contractor shall have the necessary checkout and calibration activities performed to bring the equipment to a ready-for-commercial operating condition.

The following is intended to give a general definition of the scope of work under this section, and shall not be construed to be an itemized listing of each element of work required. Any specific manufacturer's recommendations for testing in addition to those described in this section shall be performed. All work shall be performed in accordance with the procedures and methods established by the Contractor and acceptable to the Purchaser.

4F.2 CHECKOUT ACTIVITIES. The following checkout activities shall be completed by the Contractor:

- Cable meggering.
- Wire checking all wiring installed by the Contractor, including all wire terminations.
- Making corrections as required following calibration and checkout of equipment to ensure correct operation of equipment. These corrections may include the following:
    - Removal or readjustment of factory shunts or jumpers.
    - Wiring corrections.

4F.3 I/O LOOP CHECK ACTIVITIES. The Contractor shall be solely responsible for performing loop check on each individual DCS I/O point as described in Section 1A.1. The Contractor's bid shall be based on no loop check assistance from the Purchaser. During loop checkout, the Purchaser shall be allowed, solely at the Purchaser's discretion, to participate in performing or witnessing the loop checks.

To allow the Purchaser to monitor progress during the critical loop check phase of each outage, the Contractor shall develop and issue for Purchaser review and approval, a loop check plan, and a loop check tracking spreadsheet detailing each I/O point to be loop checked. During the loop check period the Contractor shall update the loop check tracking spreadsheet with date and initials of person completing the loop checks, summarize the total loop checks to be completed and the percent complete, and issue this information to the Purchaser on a daily basis.

4F.4 COMMISSIONING. The following commissioning activities shall be completed by the Contractor:

- Verify digital and analog logic works as designed.
- Verify all DCS operator interfaces work properly.
- Verify all DCS hardware and communications work properly.
- Perform control loop tuning.

All commissioning activities that occur during plant operation shall be coordinated by the Contractor with the Purchaser.

The Contractor shall provide all necessary labor and manufacturer's technical services required for completion of startup and commissioning of the DCS.

4F.5 TOOLS AND TEST EQUIPMENT. The Contractor shall provide all required tools, test equipment, and temporary instrumentation and gauging, to perform all calibration, checkout, and commissioning work in accordance with these specifications and the project schedule. All test equipment shall be periodically certified.

The Contractor shall provide as many items of each category of test equipment as are required to perform the work in accordance with the project schedule.

A001 - MISCELLANEOUS REQUIREMENTS

A001.1 GENERAL. All Section 5 supplemental specifications apply in general to all equipment and materials and are supplementary to the detailed specifications. If requirements specified herein are in conflict with requirements specified in the detailed specifications, the detailed specifications shall govern to the extent of such conflict.

It is recognized that the manufacturer may have standardized on the use of certain components, materials, processes, or procedures different than those specified herein. Alternates, in addition to the base bid, on the basis of supplying the manufacturer's standard components, materials, processes, or procedures shall be considered. The alternate bid shall clearly stipulate the alternate proposed, the specific exceptions to the specifications, and the price change applicable for supplying such alternate.

A001.2 IDENTIFICATION. All correspondence, shipping notices, specifications, engineering data, and other documents pertaining to the equipment and materials furnished under these specifications shall be identified by the Purchaser's name, the project name, the unit number, the contract number, and the Purchaser's project number.

A001.3 CONTROL POWER Electrical power for control and instrumentation shall be 24 Volts DC or nominal 240 volt, single-phase, 50 hertz, alternating current. The Contractor shall provide any devices required for proper operation and protection of the equipment during electrical power supply and ambient temperature fluctuations described in the following paragraphs.

All dc electrical control devices shall be designed for continuous operation on an ungrounded station battery at any voltage from 18 to 30 Volts DC. Electrical devices served from this supply shall not impose any ground connections on it.

All ac electrical control devices shall, unless otherwise specified, be designed for continuous operation at any voltage from 204 to 276 volts alternating current. Alternating current electrical control devices operating at nominal voltages other than 240 volts shall be designed for continuous operation over proportional voltage variations.

All devices shall be guaranteed to operate satisfactorily under voltage conditions specified in the above paragraphs and at a range of ambient temperatures from 50 degC to –30 degC outdoors and from 50 degC to –10 degC indoors.

A001.4 NUMBERING SYSTEM. The Purchaser shall establish an identification numbering system to provide consistent numbering throughout the generating unit. All electrical devices, control and instrumentation equipment, valves, and other items of similar nature shall be permanently identified with the identification number supplied by the Purchaser. Except as specified otherwise in these specifications, the identification shall be engraved on stainless steel or laminated phenolic tags or nameplates at the option of, and as acceptable to, the Purchaser and permanently affixed to the device. The Purchaser's identification numbers shall be included on the manufacturer's drawings.

The Contractor shall request the numbering assignments as necessary for the design.

A002 - SHIPPING REQUIREMENTS

A002.1 IDENTIFICATION. All correspondence, shipping notices, specifications, engineering data, and other documents pertaining to the equipment and materials furnished under these specifications shall be identified by the Purchaser's name, the project name, the unit number, the specification number, and the Purchaser's project number.

A002.2 PRESHIPMENT INSPECTION. The Purchaser reserves the right to inspect the equipment prior to shipment.

The Contractor shall notify the Purchaser of all shipments not less than 10 days prior to the date of shipment to allow the Purchaser to inspect the equipment if so desired.

A002.3 MATERIALS LIST. The Contractor shall prepare and submit with the first shipping notice two copies of an itemized materials list covering all material and equipment furnished under these specifications. The materials list shall be in sufficient detail to permit an accurate determination of the completion of shipment.

A002.4 HAZARDOUS MATERIALS. All shipments of hazardous materials shall be identified on the materials list. A copy of the hazardous materials shall be included with the materials list and shall also be included with the shipping papers attached to the shipment.

A002.5 CONSOLIDATED SHIPMENTS. Except where authorized by the Purchaser in writing, the Purchaser will not accept direct shipments of Contractor-furnished materials and equipment from subcontractors. The Contractor shall assemble shipping units composed of those items of materials and equipment which he obtains from subcontractors. Shipping unit assembly shall be at one of the Contractor's regular business addresses. All shipments from the Contractor's shipping unit assembly location shall be packaged and identified as indicated in this section. The Contractor shall state in his bid the minimum quantity of materials and equipment he will assemble as a shipping unit and the assembly location for shipping units.

A002.6 PACKAGING AND IDENTIFICATION OF SPARE PARTS. Spare parts shall be shipped in heavily constructed weatherproofed boxes. The boxes shall be designed as permanent storage enclosures. Separate boxes shall be used for the spare parts for each major piece of equipment. Where applicable, boxes shall be designed and constructed for return shipment of damaged or worn components for repair.

Spare parts shall be protected from damage due to moisture and dirt accumulation during an extended storage period by use of special coatings, airtight membranes, anti-static bags, bags of desiccant, or other means acceptable to the Purchaser.

Each box shall be marked with large painted legend as follows:

SPARE PARTS FOR _____(Name of Equipment)_____
ERECTION CONTRACTOR DO NOT OPEN EXCEPT WITH
PURCHASER'S PERMISSION

A weatherproofed itemized list of the contents shall be attached to the outside of each box. A similar list shall be inside each box.

A002.7 SPECIAL SHIPPING REQUIREMENTS. Where specified, the manufacturer shall mount and ship impact recorders on each railcar or truck transporting the specified equipment. The impact recorders shall be mounted at the factory to provide a permanent record of the magnitude of axial, transverse, and vertical forces to which the equipment will be subjected while in transit. The custody of the impact recorders upon arrival at the plant site shall be the responsibility of the manufacturer's field representative. The recorder impact charts shall be delivered to the Purchaser and shall become part of the furnished equipment.

A002.8 PROTECTION. All equipment shall be boxed, crated, or otherwise suitably protected during shipment, handling, and storage. Equipment having antifriction or sleeve bearings shall be protected by weathertight enclosures.

Coated surfaces shall be protected against impact, abrasion, discoloration, and other damages. Surfaces which are damaged shall be repaired.

Electrical equipment, controls, and insulations shall be protected against moisture and water damage. All external gasket surfaces and flange faces, couplings, rotating equipment shafts, bearings, and like items shall be thoroughly cleaned, coated with rust-preventive compound and protected with suitable wood, metal, or other substantial type covering to ensure their full protection. All exposed threaded parts shall be greased and protected with metallic or other substantial type protectors.

All conduit connections on equipment and other equipment openings shall be closed with rough usage covers or plugs. Female threaded openings shall be closed with forged steel plugs. The closures shall be taped to seal the interior of the equipment. Open ends of conduit shall be sealed and taped.

Equipment with removable, rolling, sliding, or otherwise moveable shelves, heads, racks, or components shall have these items secured from movement during shipping.

Q400 - GENERAL EQUIPMENT REQUIREMENTS

Q400.1 NAMEPLATES AND TAGS. Nameplates and tags shall be furnished for all equipment with a Purchaser's identification number based upon the guidelines provided herein. The Purchaser will annotate the Contractor's drawings on initial submittals of technical drawings of the equipment. The information will include the nameplate description, tag number, physical size, and lettering height. The type of nameplate will vary because of size constraints, equipment location and/or orientation, or the environment in which the equipment is located.

In general, nameplates shall be furnished for major equipment, including all operator interfaces, control and electrical panels, cabinets, and instrument racks. The nameplates shall be beveled, laminated white phenolic plastic engraving stock with black core, or beveled, two-ply vinyl white with reverse engraved black fill. These nameplates shall be 2 inch by 8 inch (50 mm by 200 mm), with three lines of text. The top two lines of text shall be a brief description of the equipment. These lines of text shall be 3/8 inch (10 mm) high. The bottom line of text shall be the Purchaser's identification number of the equipment. This line of text shall be 3/16 inch (5 mm) high. Nameplates that are to be mounted on equipment to be installed in nonair-conditioned areas shall be attached with stainless steel panhead screws, rivets, drive screws, or epoxy glue. Nameplates that are to be mounted on equipment to be installed in heated and air-conditioned areas shall be attached with high performance adhesive tape. Nameplates shall be 1/16 to 1/8 inch (2 mm to 4 mm) thick.

Stainless steel tags shall be furnished for field instrumentation, process valves, and other small devices that a plant operator is not likely to have any direct interface with, as directed by the Purchaser. These stainless steel tags shall be permanently attached to the equipment with stainless steel panhead screws, rivets, drive screws, or with the Purchaser's acceptance, stainless steel wire. The size of these tags shall be a minimum of 3/4 inch by 3 inches (20 mm by 75 mm) and include the Purchaser's identification number. The text shall be sized to be as large as possible within the size constraints.

Separate nameplates are not required for pressure indicators. They may be provided instead with nameplate information, as described above, permanently engraved on the faces. Face engraving text size and layout shall be readable without magnification.Q400.2

Q400.2 FACTORY ASSEMBLY. Equipment shall be shipped completely factory assembled, except when the physical size, arrangement or configuration of the equipment, or shipping and handling limitations make the shipment of completely assembled equipment impracticable, in which case the equipment shall be assembled and shipped as stated in the Contractor's proposal. Any deviations after contract award could result in Contractor's performance of some assembly at the site or backcharges to the Contractor for others required to perform such assembly. When proposals are submitted without statements describing sectional shipments, it will be understood that no field assembly of the equipment will be required and the Contractor shall be responsible for all costs encountered in the field for assembly of sections, accessories, or appurtenances not listed in the Proposal as requiring field assembly.

All separately packaged accessory items and parts shall be shipped with the equipment. Containers for separately packaged items shall be marked so that they are identified with the main equipment. An itemized packing slip, indicating what is in that container only, shall be attached to the outside of each container used for packaging. A similar list shall be inside each container. A master packing slip, covering all accessory items for a given piece of equipment which are shipped in separate containers, shall be attached to one container.

Q400.3 TOOLS. The Contractor shall furnish and ship with each piece of equipment one set of all special tools required for dismantling, maintenance, and overhaul of the equipment. The tools shall be shipped in separate, heavily constructed wooden boxes provided with hinged covers and padlock hasps.

Maintenance tools for each piece of equipment shall be boxed separately and the boxes shall be marked with the name of the project and the name of the equipment.

The maintenance tools shall include all special handling rigs, bars, slings, and cable. All maintenance tools shall be in new and unused condition and shall become the property of the Purchaser. The bidder's proposal shall include the list of maintenance tools which shall be furnished with the equipment.

In addition to the tools for maintenance and dismantling, the Contractor shall furnish the use of all special tools required for erection of the equipment. Erection tools shall remain the property of the Contractor and all shipping costs to and from the jobsite shall be at the Contractor's expense. Erection tools for each piece of equipment shall be boxed separately. Erection tools shall not be boxed with maintenance tools.

FINANCIAL PROPOSAL

ELCEN

GENERATING PLANT NAME

DISTRIBUTED CONTROL SYSTEM

RFP NO.
PROJECT

BID ISSUE
(REV 0)

building a world of difference™ | BLACK & VEATCH

{{ Enter Owners Name }}
{{ Enter Generating Station Name and Unit Number }}
CONTROL UPGRADE PROJECT

BID FOR: DISTRIBUTED CONTROL SYSTEM

THIS BID IS SUBMITTED TO:

{{ Enter Address for Bid Issue }}

Attention: {{ Enter Bid Issue Attention Name }}
Gentlemen:

Article FP.1
The undersigned Bidder proposes and agrees, if this Bid is accepted, to enter into an agreement with Purchaser in the form included in the Contract Documents to perform and furnish all Work as specified or indicated in the Contract Documents for the Bid Price and in accordance with the terms and conditions of the Contract Documents, except as Bidder has otherwise indicated in Article FP.2.4 of this Bid Form.

Article FP.2
In submitting this Bid, Bidder represents, as more fully set forth in the Agreement, that:

FP.2.1 Bidder has examined and carefully studied the Bidding Documents and the following Addenda (receipt of all of which is hereby acknowledged):

Addendum Date	Addendum Number

FP.2.2 Bidder has given Purchaser written notice of all conflicts, errors, ambiguities, or discrepancies that Bidder has discovered in the Contract Documents and the written resolution thereof by Purchaser is acceptable to Bidder (except as otherwise noted in Article FP.2.4), and Bidder is satisfied that the Contract Documents are generally sufficient to indicate and convey understanding of all terms and conditions for performing and furnishing the Work for which this Bid is submitted.

FP.2.3 This Bid is genuine and not made in the interest of or on behalf of any undisclosed person, firm, or corporation and is not submitted in conformity with any agreement or rules of any group, association, organization, or corporation; Bidder has not directly or indirectly induced or solicited any other Bidder to submit a false or sham Bid; Bidder has not solicited or induced any person, firm, or corporation to refrain from bidding; and Bidder has not sought by collusion to obtain for itself any advantage over any other Bidder or over Purchaser.

FP.2.4 The Work will be performed in strict accordance with the Contract Documents except for the following specific variations and exceptions:

(Add pages as required.)

Article FP.3 Bid Pricing
Bidder will complete the Work in accordance with the Contract Documents for the following price in EURO:

FP.3.1 Lump Sum Bid Price. Lump sum price for furnishing the Work complete:

_____ (_____)
(Use Words) (Figures)

FP.3.2 Breakout Pricing. Breakout pricing of the above lump sum price in EURO (total shall equal lump sum price):

Portion of lump sum price for DCS equipment design and configuration

_____ (Figures)

Portion of lump sum price for DCS equipment

_____ (Figures)

Portion of lump sum price for installation engineering

_____ (Figures)

Portion of lump sum price for installation (labor and material)

_____ (Figures)

Portion of lump sum price for training

_____ (Figures)

Portion of lump sum price for field service (salary, expenses, travel)

_____ (Figures)

Portion of lump sum price for equipment shipment

_____ (Figures)

FP.3.3 Options Pricing. Bidder will provide optional prices to complete the Work listed below. The prices below are not to be included in the above lump sum price. The optional prices below will not be evaluated directly as a part of the Bid.

FP.3.3.1 Option 1. {{ Enter Option 1 Description Here }}

_____ (_____)
(Use Words) (Figures)

FP.3.3.2 Option 2. {{ Enter Option 2 Description Here }}

_____ (_____)
(Use Words) (Figures)

<< Repeat For All Required Options >>

Article FP.4 Subcontractors
This bid is based upon the use of the following subcontractors:

Trade	Subcontractor

All technical requirements and all commercial terms and requirements must be followed by all subcontractors as well as by the Contractor.

Article FP.5 Unit Adjustment Pricing
The Bidder shall provide unit adjustment pricing as a part of the Bid. This pricing shall be supplied by completing the table at this end of this section. The supplied unit adjustment prices may be used by the Purchaser, at any time during the Contract, to adjust the contract lump sum price to compensate for modifications to the Work. Each unit adjustment price shall be the total cost of the specific unit of Work to be billed to the Purchaser for additions to or to be deducted from the contract lump sum price for deletions.

Article FP.6 Bid Communications
Communications to the Bidder concerning this Bid shall be addressed to the following person:

Name _____

Mail address _____

_____

_____

Street address _____

_____

_____

Telephone _____

Fax _____

Article FP.7 Bid Signatures

If Bidder is:

A Corporation

This Bid is submitted on this _____ day of _____, _____.

By _____
(Corporation Name)

_____
(State of Incorporation)

By _____
(Signature of Person Authorized to Sign)

_____
(Typed Name and Title)

(Corporate Seal)

Attest _____
(Secretary)

Complete business
mail address: _____

_____

_____

Complete business
street address: _____

_____

_____

Telephone _____

Fax _____

Distributed Control System
FP Financial Proposal

If Bidder is:

A Partnership

This Bid is submitted on this _____ day of _____, _____.

By _____
(Firm Name)

By _____
(Signature of General Partner)

_____
(Typed Name of General Partner)

(Seal)

Attest _____
(Secretary)

Complete business
mail address: _____

_____

_____

Complete business
street address: _____

_____

_____

Telephone _____

Fax _____

Distributed Control System
UAP Unit Adjustment Prices

Hardware Unit Adjustment Pricing. Each hardware unit price (in EURO) shall include furnishing and installing complete the specific unit designated, as detailed in the technical sections of the specification, and shall include all associated engineering and design costs and overhead and profit markup.

Item	Firm Price Add	Firm Price Delete
One bi-directional foreign device interface (hardware only) based on 200 points.		
A-B DH+ (including DH+ to RS interface card)		
Redundant - RS232/RS485	_____	_____
Non-Redundant - RS232/RS485	_____	_____
Modbus		
Redundant - RS232	_____	_____
Non-Redundant - RS232	_____	_____
Non-Redundant - Ethernet	_____	_____
Other	_____	_____
FDI Type: _____	_____	_____
FDI Type: _____	_____	_____
One of each type control and data acquisition processor.		
Module Type: _____	_____	_____
Module Type: _____	_____	_____
Module Type: _____	_____	_____
Module Type: _____	_____	_____
One of each type of I/O card.		
Digital inputs (120 VAC) Card type: _____	_____	_____
Digital inputs (125 VDC) Card type: _____	_____	_____
Digital inputs (125 VDC-SOE) Card type: _____	_____	_____
Digital inputs (Pulse) Card type: _____	_____	_____

Distributed Control System
UAP Unit Adjustment Prices

Item (continued)	Firm Price Add	Firm Price Delete
One of each type of I/O card (continued).		
Digital inputs miscellaneous Card type: _____	_____	_____
Digital inputs miscellaneous Card type: _____	_____	_____
Digital outputs (relay type – 120 VAC) Card type: _____	_____	_____
Digital outputs (solid state type – 125 VDC) Card type: _____	_____	_____
Digital outputs (relay type – 125 VDC) Card type: _____	_____	_____
Digital outputs miscellaneous Card type: _____	_____	_____
Digital outputs miscellaneous Card type: _____	_____	_____
Analog inputs (4-20 mA) Card type: _____	_____	_____
Analog inputs (+/- 10 VDC) Card type: _____	_____	_____
Analog inputs (Thermocouple) Card type: _____	_____	_____
Analog inputs (RTD) Card type: _____	_____	_____
Analog outputs (4-20 mA) Card type: _____	_____	_____
Analog outputs miscellaneous Card type: _____	_____	_____
One 120 VAC interposing relay.	_____	_____
One 125 VDC interposing relay.	_____	_____

Distributed Control System
UAP Unit Adjustment Prices

Item (continued)	Firm Price Add	Firm Price Delete
One of each type display processor (or server).		
Module Type: _____	_____	_____
Module Type: _____	_____	_____
Module Type: _____	_____	_____
Module Type: _____	_____	_____
One of each type of operator workstation proposed including all CRT(s), control devices, hardware and electronics.		
Station Type: _____	_____	_____
Station Type: _____	_____	_____
Station Type: _____	_____	_____
Delete 1 single CRT operator work station and add 1 dual CRT operator work station.	_____	
Delete 1 dual CRT operator work station and add 1 single CRT operator work station.		_____
One of each type of engineer/operator workstation proposed including all CRT(s), control devices, hardware and electronics.		
Station Type: _____	_____	_____
Station Type: _____	_____	_____
Station Type: _____	_____	_____
One of each type printer proposed including all hardware and electronics.		
Printer Type: _____	_____	_____
Printer Type: _____	_____	_____
Printer Type: _____	_____	_____
One operator console benchboard section.	_____	_____
One operator console wedge section.	_____	_____

Distributed Control System
UAP Unit Adjustment Prices

Item (continued)	Firm Price Add	Firm Price Delete
One system electronics cabinet with racks, power distribution equipment, & cabling.	_____	_____
One I/O equipment cabinet with racks, power distribution equipment, & cabling.	_____	_____
One I/O interposing termination cabinet with racks, power distribution equipment, & cabling.	_____	_____
One 12 point strap-type terminal block for ring lugs.	_____	_____
One 12 point disconnect type terminal block.	_____	_____
One 12 point thermocouple terminal block.	_____	_____
One of each power supply proposed.		
Supply Type: _____	_____	_____
Supply Type: _____	_____	_____
Supply Type: _____	_____	_____
Supply Type: _____	_____	_____
Each type of Contractor provided interconnecting cable, per meter of cable.		
Cable Type: _____	_____	_____
Cable Type: _____	_____	_____
Cable Type: _____	_____	_____
Cable Type: _____	_____	_____
Cable Type: _____	_____	_____
Cable Type: _____	_____	_____
Cable Type: _____	_____	_____
Cable Type: _____	_____	_____
Cable Type: _____	_____	_____

Distributed Control System
UAP Unit Adjustment Prices

Software Unit Adjustment Pricing. Each software unit price (in EURO) shall include all associated engineering and design costs and overhead and profit markup for the specific unit designated, as detailed in the technical sections of the specification.

Item	Firm Price Add	Firm Price Delete
One bi-directional foreign device interface implementation (software only) based on 200 points.	_____	_____
One graphic pictorial (design and configuration) based on 100 dynamic variables and 50 target points.	_____	_____
One faceplate display (design and configuration) based on 8 stations.	_____	_____
One text display (design and configuration) permit, startup, or help screen type.	_____	_____
One trend display (design and configuration) based on 8 points.	_____	_____
One bar chart display (design and configuration) based on 16 points.	_____	_____
One X-Y plot (design and configuration).	_____	_____
One periodic report (configuration).	_____	_____
One trend report (configuration).	_____	_____

Distributed Control System
UAP Unit Adjustment Prices

Construction - Miscellaneous Work. Each miscellaneous work unit price (in EURO) shall include material / installation of the specific unit designated, as detailed in the technical sections of the specification, and shall include all associated engineering and design costs and overhead and profit markup.

Item	Firm Price Mat / Install Add	Firm Price Mat / Install Delete
100 mm diameter core drill.	/	/
150 mm diameter core drill.	/	/
500 mm square or less penetration fill	/	/
1 meter square or less penetration fill.	/	/
Indoor junction box with 12 point terminal block	/	/
Outdoor junction box with 12 point terminal block	/	/
12 point terminal block.	/	/
Thermocouple terminal block, 12 point	/	/
Fuse block (2-pole) with fuse and copper slug.	/	/
Fuse, 30 amp maximum rating.	/	/
Control Relays		
120 VAC relay with four contacts	/	/
125 VDC relay with diode and four contacts.	/	/
Timing relay with four contacts	/	/
DIN rail/1 meter.	/	/

Distributed Control System
UAP Unit Adjustment Prices

Construction - Raceway. Each raceway unit price (in EURO) shall include material / installation of the specific unit designated, as detailed in the technical sections of the specification, and shall include all associated engineering and design costs and overhead and profit markup.

Item	Firm Price Mat / Install Add	Firm Price Mat / Install Delete
Rigid galvanized steel conduit, per linear meter, including fittings and supports		
3/4 inch	/	/
1 inch	/	/
1-1/2 inch	/	/
2 inch	/	/
2 1/2 inch.	/	/
3 inch	/	/
4 inch	/	/
EMT conduit, per linear meter, including fittings and supports		
1/2 inch	/	/
3/4 inch	/	/
1 inch.	/	/
Cable tray installation and supports, per linear meter Cable tray and fittings shall be supplied by Purchaser)		
4 inch x 12 inch ladder	/	/
6 inch x 12 inch ladder.	/	/
4 inch x 18 inch ladder	/	/
6 inch x 18 inch ladder	/	/
4 inch x 24 inch ladder	/	/
6 inch x 24 inch ladder	/	/
4 inch x 36 inch ladder.	/	/
6 inch x 36 inch ladder	/	/

Raceway Item (continued)	Firm Price Mat / Install Add	Firm Price Mat / Install Delete
Cable tray cover installation, per linear meter		
12 inch	/	/
18 inch	/	/
24 inch	/	/
36 inch	/	/
Wireway, including fittings and supports, per linear meter		
6 inch x 6 inch	/	/

Construction - Conductors. Each conductors unit price (in EURO) shall include material / installation of the specific unit designated, as detailed in the technical sections of the specification, and shall include all associated engineering and design costs and overhead and profit markup.

Item	Firm Price Mat / Install Add	Firm Price Mat / Install Delete
Cable, per 30 meters (excluding terminations)		
Type C3		
3 cond w/gnd, 12 AWG	/	/
3 cond w/gnd, 10 AWG	/	/
3 cond w/gnd, 8 AWG.	/	/
3 cond w/gnd, 6 AWG	/	/
3 cond w/gnd, 4 AWG.	/	/
3 cond w/gnd, 2 AWG	/	/
Type D1		
2 cond, 14 AWG	/	/
3 cond, 14 AWG	/	/
5 cond, 14 AWG	/	/
7 cond, 14 AWG	/	/
9 cond, 14 AWG	/	/
12 cond, 14 AWG	/	/

Distributed Control System
UAP Unit Adjustment Prices

Conductors Item (continued)	Firm Price Mat / Install Add	Firm Price Mat / Install Delete
Cable, per 30 meters (excluding terminations) (continued)		
Type EP2		
1 pair	/	/
2 pair	/	/
4 pair	/	/
8 pair	/	/
Type ET2		
1 triad	/	/
Type TE		
1 pair	/	/
4 pair	/	/
Contractor Defined Communication Cables		
Cable Type 1: _____	/	/
Cable Type 2: _____	/	/
Cable Type 3: _____	/	/
Cable Type 4: _____	/	/

Distributed Control System
UAP Unit Adjustment Prices

Construction - Cable Terminations. Each cable termination unit price (in EURO) shall include material /installation of the specific unit designated, as detailed in the technical sections of the specification, and shall include all associated overhead and profit markup.

Item	Firm Price Mat / Install Add	Firm Price Mat / Install Delete
Cable terminations (including termination and tagging of insulated conductors, shield wires, and ground conductors) and coiling and taping of spare conductors, per cable end		
Type C3		
3 cond w/gnd, 12 AWG	/	/
3 cond w/gnd, 10 AWG	/	/
3 cond w/gnd, 8 AWG	/	/
3 cond w/gnd, 6 AWG	/	/
3 cond w/gnd, 4 AWG	/	/
3 cond w/gnd, 2 AWG	/	/
Type D1		
3 cond, 14 AWG	/	/
5 cond, 14 AWG	/	/
7 cond, 14 AWG	/	/
9 cond, 14 AWG	/	/
12 cond, 14 AWG	/	/
Type EP2		
1 pair	/	/
2 pair	/	/
4 pair	/	/
8 pair	/	/
Type ET2		
1 triad	/	/
Type TE		
1 pair	/	/

Cable Terminations Item (continued)	Firm Price Mat / Install Add	Firm Price Mat / Install Delete
Cable terminations (including termination and tagging of insulated conductors, shield wires, and ground conductors) and coiling and taping of spare conductors, per cable end (continued)		
Contractor Defined Communication Cables		
Cable Type 1: _____	/	/
Cable Type 2: _____	/	/
Cable Type 3: _____	/	/
Cable Type 4: _____	/	/

Construction-Grounding. Each grounding unit price (in EURO) shall include material / installation of the specific unit designated, as detailed in the technical sections of the specification, and shall include all associated overhead and profit markup.

Item	Firm Price Mat / Install Add	Firm Price Mat / Install Delete
Grounding, per 30 meters		
Type GU (Bare)		
2 AWG	/	/
2/0 AWG	/	/
4/0 AWG	/	/
Type GI (Insulated)		
4/0 AWG green insulation	/	/
Exothermal weld		
4/0 AWG to 4/0 AWG	/	/

Distributed Control System
UAP Unit Adjustment Prices

Engineering Services. The following hourly rates will be used to adjust the Contract Price for additions to or deductions from the engineering scope.

Project Manager (EURO/Hr) _____

Lead Engineer (EURO/Hr) _____

Engineer (EURO/Hr) _____

Technician (EURO/Hr) _____

Drafter (EURO/Hr) _____

_____(EURO/Hr) _____

_____(EURO/Hr) _____

Technical Services. The following prices (in EURO) will be used to adjust the Contract Price for additions to or deductions from the bank quantities of technical services specified in Section 1A.3.2.2.

Per diem at Project Site _____

Per round trip to and from Project Site _____

Training Services. The following prices (in EURO) will be used to adjust the Contract Price for additions to or deductions from the amount of training services specified in Section 1A.3.2.3.

Per diem at Project Site _____

Per round trip to and from Project Site _____

Construction Services. The following hourly rates will be used to adjust the Contract Price for additions to or deductions from the construction scope.

Project Manager (EURO/Hr) _____

Site Superintendent (EURO/Hr) _____

Foreman (EURO/Hr) _____

Electrician (EURO/Hr) _____

_____(EURO/Hr) _____

_____(EURO/Hr) _____

SPECIFICATIONS
AND
DOCUMENTS

ELCEN

GENERATING PLANT NAME

DATA HISTORIAN

RFP NO. _____
PROJECT _____

BID ISSUE
(REV 0)

building a world of difference™ | BLACK & VEATCH

TABLE OF CONTENTS

	Page
A - GENERAL INFORMATION	
A.1 INSTRUCTIONS TO BIDDERS	A-1
A.2 RIGHT TO REJECT	A-1
A.3 VALIDITY	A-1
A.4 PROJECT PROCEDURES	A-1
A.4.1 Correspondence	A-1
A.4.2 Project Team	A-1
A.4.3 Scope Change Document	A-2
A.4.4 Invoicing	A-2
A.4.5 Warranty	A-2
A.4.6 Performance Guarantee	A-3
A.4.7 Acceptance Documentation	A-3
A.4.8 Insurance	A-3
B – BID DATA	
B.1 GENERAL	B-1
B.2 DATA HISTORIAN DATA	B-1
Section 1A – SCOPE OF WORK	
1A.1 GENERAL	1A-1
1A.2 WORK INCLUDED UNDER THIS RFP	1A-1
1A.2.1 Miscellaneous Materials and Services	1A-1
1A.3 WORK NOT INCLUDED UNDER THIS SPECIFICATION-	1A-1
1A.4 WORK INCUDED AS OPTIONS UNDER THIS SPECIFICATION-	1A-1
1A.5 CONTRACTOR'S SERVICES	1A-2
1A.5.1 Submittal of Engineering Data	1A-2
1A.5.2 Contractor's Field Technical Services	1A-2
1A.5.3 Implementation Conference	1A-2
1A.6 LANGUAGE, NUMBERS, AND SYMBOLS	1A-2
Section 1B – DESIGN DATA AND DRAWINGS	
1B.1 GENERAL	1B-1
1B.2 CORRESPONDENCE	1B-1
1B.3 REVIEW OF ENGINEERING DATA	1B-1
1B.4 DESIGN DATA	1B-1
1B.5 DRAWINGS & OTHER CONTRACTOR PREPARED MATERIALS	1B-2
1B.5.1 Drawing & Material Submittal	1B-2
1B.5.2 Final Markup Drawings & Materials	1B-2
1B.6 INSTRUCTION MANUALS/DOCUMENTATION	1B-2

Section 1C– SCHEDULE

1C.1 GENERAL	1C-1
1C.2 SCHEDULE	1C-1
1C.3 PRELIMINARY SCHEDULE	1C-1
1C.4 CONTRACTOR'S DETAILED SCHEDULE	1C-1

Section 1D – OTHER REQUIREMENTS

1D.1 GENERAL	1D-1
1D.2 REFERENCED STANDARDS	1D-1
1D.2.1 List of References	1D-2
1D.3 MATERIALS	1D-2
1D.4 IDENTIFICATION	1D-2
1D.5 SHIPMENTS	1D-2
1D.6 SHIPPING NOTICE	1D-3
1D.7 MATERIALS LIST	1D-3
1D.8 CORRECTION OF ERRORS	1D-3
1D.9 QUALITY ASSURANCE	1D-3

Section 2A – TECHNICAL REQUIREMENTS

2A.1 GENERAL INTENTION	2A-1
2A.2 INPUT DESCRIPTIONS	2A-1
2A.3 GENERAL SOFTWARE REQUIREMENTS	2A-1
2A.4 GENERAL HARDWARE REQUIREMENTS	2A-1
2A.5 INSTRUMENTATION	2A-2
2A.6 CONTROL POWER	2A-2
2A.7 TRAINING	2A-2
2A.8 TECHNICAL SUPPORT	2A-2
2A.8.1 Telephone Support	2A-2
2A.8.2 On-Site Support	2A-2

Section 3A – INSTALLATION AND CONSTRUCTION Not Used

A - GENERAL INFORMATION

Data historians are used in conjunction with data acquisition systems to store process data on a timed basis (i.e. once per minute). Data is typically stored in a Structured Query Language (SQL) compliant database to support trend analysis, reporting, and long-term record storage. The Owner intends to purchase a data historian and supporting hardware (THIS IS OPTIONAL) for use with the _____ *system at Unit* ___ *of the* _____ Power Station. Data will be transferred using _____ protocol over a _____ local area network (LAN).

A.1 INSTRUCTIONS TO BIDDERS. The Contractor shall provide a complete proposal detailing but not necessarily limited to a description of the services, exceptions and/or clarifications to the proposal, fees, rate structures, and terms and conditions which will govern the project. The Contractor will provide a description of the work package. THE PROPOSAL SHALL INCLUDE THE ESTIMATED MAN-HOURS AND ASSOCIATED COSTS FOR THE PROJECT; THE COSTS SHALL BE CONSIDERED AS FIRM PRICE, WITH NO INCREASES BEING ALLOWED EXCEPT FOR AUTHORIZED CHANGED IN THE SCOPE OF WORK.

A.2 RIGHT TO REJECT. The right is reserved by ELCEN to reject any or all proposals. In addition, ELCEN may elect to cancel the project if it is determined necessary by ELCEN or if funding is not available.

A.3 VALIDITY. Bidder's proposal shall remain valid for a period of _____ (__) days commencing on the proposal date.

A.4 PROJECT PROCEDURES. The following items and services shall be furnished as optional work under this specification:

A.4.1 Correspondence. All correspondence and documents from the Contractor to ELCEN during the proposal process shall be addressed to:

Type name and address of ELCEN contacts here.

After award, a formal distribution list for letters, transmittals, etc. will be created.

A.4.2 Project Team. The Contractor shall have a dedicated Project Manager responsible for the coordination of all project related activities. The Project Manager identified for this project by the Contractor shall remain in that position throughout the project. Any changes in this key position shall be with the approval of Termoelectrica.

The Contractor shall include resumes of personnel who would be assigned to the project, project team organization, job descriptions, project experience, and other information that is considered pertinent.

ELCEN reserves the right to request personnel changes if performance/experience becomes an issue.

A.4.3 Scope Change Document . For any modified scope changes or additions to the Contractor work, the Contractor will provide written notification per the contract procedure. ELCEN reserves the right to have any extra work performed on a firm price, not-to-exceed or cost-plus basis. The Contractor will submit with his proposal a complete rate structure applicable to any work to be performed under this agreement.

The Scope Change Document shall describe the reason for change, the person who requested the change, the original scope and man-hour cost, and the new scope and man-hour cost.

Each Scope Change Document shall be consecutively numbered. Any effects on the engineering schedule and overall project schedule shall be described. **WRITTEN APPROVAL FROM ELCEN IS REQUIRED BEFORE PROCEEDING WITH THE SCOPE CHANGE.**

A.4.4 Invoicing. The Contractor's proposal is to include a description of their invoicing procedures. ELCEN will issue a purchase order to the selected Contractor. Invoices not complete in reference or lacking in backup information will be rejected.

Progress and/or milestone based payments will be made in an amount equal to _____ (__) percent of Work completed with the balance being retainage.

Final payment will be made upon completion and acceptance of the work. Retainage will be paid after all submittals have been received and accepted following final payment.

A.4.5 Warranty. The Contractor shall provide a warranty on all the hardware, software and services rendered to ensure that the Data Historian meets the following requirements:

Be free from defects in design, material, workmanship and title;

Be of the kind, quality and capability designated or described in the Contract;

Perform in the manner set forth in or required by the Contract; and

Have been produced processed, delivered and sold or licensed in conformity with all applicable federal, state and local laws, administrative regulations and orders. The Contractor shall execute, certify and deliver to ELCEN any documents as may be required to effect or evidence compliance with such federal, state and local laws.

Except for consumable items, the warranty period shall be _____.

During the warranty period, the Contractor shall provide free of charge telephone support for ELCEN users and remote support for Software imperfections.

A.4.6 Performance Guarantee. The performance guarantee shall be in the form of a bank letter of credit for 10% of the contract value, valid until receipt and approval of the

Acceptance Documentation; or by retention of 10% of the amount of each invoice, retention to be paid upon receipt and approval of the Acceptance Documentation. If in the form of a bank letter of credit, the performance guarantee should be issued by a bank in Romania, or by a bank abroad with a correspondent in Romania.

A.4.7 Acceptance Documentation. The Contractors shall provide to the Purchaser the Acceptance Documentation (at the end of executions works, at the end of commissioning, at the end of the guarantee period) in accordance with the Romanian legislation in force.

A.4.8 Insurance. The Contractor shall provide full insurance of all software, hardware, etc, against losses or damages during execution, transportation, storage, testing, and commissioning.

B - BID DATA

B.1 GENERAL. Each Bidder shall submit complete and definitive information on his proposal offering in sufficient detail to permit a complete technical analysis of the Proposal.

The requirements for information contained in this Section are basic. Additional information shall be provided as requested by the Purchaser.

The scope of supplementary information and equipment data requested herein shall be included in the Proposal to the fullest extent possible at the time of bid submittal. As a minimum, sufficient proposal data shall be submitted to demonstrate compliance with this specification, and to allow a comprehensive evaluation of the bid. Proposals lacking sufficient data to satisfy these requirements will be considered non-responsive. The successful Bidder shall complete all data submittal requests and Proposal data entries for inclusion in the Purchase Order documents prior to the Award of Contract.

B.2 DATA HISTORIAN DATA. Submit Data required on the following pages. Where options are indicated in the PROPOSAL FORM or BID DATA, provide complete information for each option.

Entries on the BID DATA forms shall be entered electronically in the MS Word file contained on the CD-ROM or diskette included with this specification. A hardcopy of the BID DATA will be included with each proposal. Electronic copies of the BID DATA file will be provided along with the required numbers of proposals.

Electronic copies of the files may be submitted by CD-ROMs or 3.5 inch diskette. Electronic copies submitted with the proposal will be virus checked and will be certified to be virus free.

REQUIREMENT DESCRIPTION	CONTRACTOR RESPONSE
GENERAL	
Describe the typical system implementation strategy.	
Describe in detail the assistance you will need from the Purchaser's staff in the installation and implementation of the complete system. What are the tasks the plant staff must perform in the installation of the hardware, software, and establishment of data communications with designated data acquisition system? Include an estimate of hours per week involvement by plant staff.	
Detail the terms under which source code will be made available for exclusive purpose of self-maintaining the system / supporting software.	
How much on-site support time will you provide during system installation and tuning in preparation for on-line operation? Describe and identify the make-up of the optimal project team including individual skill sets.	
Describe your on-going support (e.g., Help Desk, hot line, newsletters, user groups, internet, e-mail, etc.). Describe your procedure for problem resolution. What are the lead time requirements and criteria for on-site technical support?	
Describe your available on-site and off-site training programs.	
Would you use third party contractors or subcontractor for any of the services required under the specification? If so, for what parts of the project?	
Can Purchaser's staff modify the inputs to the historian including adding ,and deleting data input fields?	
What is the nature of outside help needed by plant staff to update the existing software? (i.e., new version release)	
Is there a User's Group. If yes, please indicate the number of members.	
Number of current users.	
Describe the overall system architecture including system size, redundancies, I/O quantity (if applicable), interfaces with other systems, UPS requirements / type (if applicable), backup requirements, list of equipment, etc.	
SYSTEM DESCRIPTION	
Describe the system and typical operation including all interfaces between hardware, software, and required third party tools.	

REQUIREMENT DESCRIPTION	CONTRACTOR RESPONSE
Windows ___ is the preferred operating system. What operating systems are supported (i.e. Windows NT, Windows XP, etc.) by the software?	
List the minimum and recommended hardware requirements (by component) for the Data Historians and other supporting hardware including. • Processor • RAM • Hard Drive Size • Monitor Size • Network Requirements (Ethernet LAN, TCP/IP protocol) • Printer Requirements • Modem Requirements • CD-ROM Requirements • DVD Requirements	
List the operating systems supported by software.	
TCP/IP is the Purchaser's preferred network protocol. What network systems and protocols are supported / required?	
Windows OLE and Wizard should be supported. Explain how the proposed solution meets this requirement.	
The software should include an add-in for Microsoft Excel to support real-time communication of historical data in an Excel spreadsheet. Dynamic updating should also be supported. Explain how the proposed software meets this requirement.	
The software should include DDE, OLE, and ODBC interfaces to allow for connection to Microsoft Office Suite(s) or equivalent applications with dynamic updating. Explain how the proposed software meets this requirement.	
The software should include a browser for scanning / viewing real-time and/or historical data	
The software should support a minimum of 1000 configurable points. Explain how the number of points can be expanded (if needed) at a later date.	

REQUIREMENT DESCRIPTION	CONTRACTOR RESPONSE
How much storage space is required for approximately 30 days of minute-by-minute data for a single point?	
What is the current software version number and release date? How often are software updates issued?	
Is there a limit to the number of authorized users for a given license or a fixed number of users that can have access to the server at one time? Explain.	
What languages are currently supported by the software and documentation?	
If not currently available, can a Romanian language version be developed?	
Describe the documentation that will be provided with the system.	
How are program and data errors identified and reported to the user?	
OPTIONAL SERVICES	
Please describe any optional services which are recommended or can be provided on an as-needed basis.	

Section 1A - SCOPE OF WORK

1A.1 GENERAL. Data historians are used in conjunction with data acquisition systems to store process data on a timed basis (i.e. once per minute). Data is typically stored in a Structured Query Language (SQL) compliant database to support trend analysis, reporting, and long-term record storage. The Owner intends to purchase a data historian and supporting hardware (THIS IS OPTIONAL) for use with the _____ system at Unit ___ of the _____ Power Station. Data will be transferred using _____ protocol over a _____ local area network (LAN).

This section covers the general description, scope of work, and supplementary requirements for the work included under this specification.

The work included under this specification shall be supplied FOB PLANT NAME, PLANT LOCATION.

1A.2 WORK INCLUDED UNDER THIS SPECIFICATION. The work performed by the Contractor shall be to furnish software for evaluating the cost and performance impacts of variations in fuel quality on fossil-fuel fired steam generating units. Items or services to be quoted as options to the base bid are listed under WORK INCLUDED AS OPTIONS UNDER THIS SPECIFICATION.

All computer software and documentation shall be furnished by the Contractor as specified by the Purchaser in this specification.

1A.2.1 Miscellaneous Materials and Services. Miscellaneous materials and services not otherwise specifically called for shall be furnished by the Contractor in accordance with the following:

> All supporting third-party software with the exception of the Windows operating system software required to install and operate of the Data Historian on the designated Owner's workstation(s).

1A.3 WORK NOT INCLUDED UNDER THIS SPECIFICATION. The following items of work will be furnished by the Purchaser (unless furnished as part of optional work under WORK INCLUDED AS OPTIONS UNDER THIS SPECIFICATION):

> Miscellaneous services and materials specified as furnished by the Purchaser.
>
> Computer hardware.
>
> Personnel to conduct acceptance testing of software based on Contractor's test plan.

1A.4 WORK INCLUDED AS OPTIONS UNDER THIS SPECIFICATION. The following items and services shall be furnished as optional work under this specification:

On-site training of staff in the installation and operation of the software on one or more designated workstations.

Development and calibration of unit specific models or input files required to support evaluation of alternative fuels or fuel blends.

Customized output reporting based on ELCEN specific requirements identified following user training and familiarization.

1A.5 CONTRACTOR'S SERVICES. The services called for in WORK INCLUDED UNDER THIS SPECIFICATION and the services inherent to any options purchased by the Purchaser as called for in WORK INCLUDED AS OPTIONS UNDER THIS SPECIFICATION shall be in accordance with the following.

1A.5.1 Submittal of Engineering Data. Hardware requirements, software inputs and other engineering data for the software are essential to the implementation of the entire project. The Contractor shall submit related engineering data in accordance with the schedule and requirements specified herein to assure compliance with the overall installation and operating schedule.

1A.5.2 Contractor's Field Technical Services. The Contractor shall furnish the services of one or more technical service representatives when requested by the Purchaser. The service representatives shall be technically competent and experienced in the installation and operation of the system, and authorized by the Contractor to perform the work stipulated. The Contractor's technical representative shall be responsible for all on-site work.

As part of the base scope of the work, the Contractor's technical service representatives shall provide periodic assistance and direction to the Purchaser and shall review the computer hardware and software setup with the Purchaser after installation and identify any recommended changes or adjustments to assure proper operation.

As an optional service, the Contractor's technical service representative shall be available to support software installation, data collection, model configuration, model calibration, and acceptance testing. The technical service representative shall instruct the plant personnel in the proper operation of the system.

1A.5.3 Implementation Conference. The Contractor's technical service representative shall attend an implementation conference at a time and place selected by the Purchaser to discuss matters relative to the execution of this Contract. The Contractor's technical service representative shall attend additional conferences as required by the Purchaser thereafter to expedite the work.

1A.6 LANGUAGE, NUMBERS, AND SYMBOLS.
All the documents of the offer and before signing the contract shall be in English. After signing the contract, all drawings, designs, specifications, manuals, operating instructions, statements, schedules, notices, documents, nameplates, and markings shall be in both the English and Romanian languages. All graphics developed by the Contractor shall be in the

Romanian language. Windows operating system graphics may be supplied in English if a Romanian version is not available.

All units of measurement shall be stated in the SI - system. The Contractor shall further be required to employ in all drawings and submittals the same symbols and designations as are used by the Purchaser.

Section 1B – DESIGN DATA AND DRAWINGS

1B.1 GENERAL. This section stipulates the requirements for engineering data, software documentation, or other materials which the Contractor may submit for review.

1B.2 CORRESPONDENCE. Correspondence on all technical matters shall be addressed to the Purchaser as follows:

ELCEN
UTILITY ADDRESS

Attention: CONTACT NAME

Correspondence on all procedural and commercial matters shall be addressed to the Owner's Representative as follows:

ELCEN
UTILITY ADDRESS

Attention: ELCEN CONTACT NAME

Letters of transmittal shall accompany submittals of engineering data, software documentation or other materials and shall include a list of the items included in the transmittal. Correspondence shall be identified with the project name and plant name. Transmittal of drawings and data shall be as specified in the article entitled DRAWINGS & OTHER CONTRACTOR PREPARED MATERIALS.

1B.3 REVIEW OF ENGINEERING DATA. The Purchaser's review of engineering data will cover only general conformity of the data to the specifications and documents, external connections and interfaces with existing equipment. This review does not indicate a thorough review of all dimensions, quantities, and details of the equipment, material, device, or item indicated or the accuracy of the information submitted. This review shall not be construed as relieving the Contractor from any responsibility for errors or deviations from the requirements of the contract documents.

1B.4 DESIGN DATA. The following design data shall be submitted as scheduled in Section 1C, unless otherwise specified:

List of minimum and recommended hardware requirements.

Itemized list of software input requirements including fuel quality, equipment configuration, equipment performance, and economic variables.

1B.5 DRAWINGS & OTHER CONTRACTOR PREPARED MATERIALS. It is not anticipated that any Contractor-prepared drawings will be required for this project. However, any Contractor-prepared drawings or other Contractor prepared materials shall be sufficient detail to indicate the arrangement, description, operation or use of the materials for the information specifically requested in the submittal schedule specified in Section 1C.

1B.5.1 Drawing & Material Submittal. ____ (__) copies of the drawings and /or other contractor prepared materials shall be submitted to the Purchaser as follows:

_____copies to:
ELCEN
Address:

Attention: Contact

Markups reviewed by the Purchaser will be returned to the Contractor with corrections or exceptions clearly marked. The Contractor shall make the changes noted thereon and copies of the corrected drawings or data shall be submitted for review in the same manner as the original submittal.

When the drawings or other Contractor prepared materials are returned to Contractor with no corrections or exceptions noted the Contractor shall submit versions for final distribution as specified hereinafter under Final Markup Drawings and Contractor Prepared Materials..

No work shall be performed in connection with the installation of equipment, materials, computer hardware and software until the drawings and data have been reviewed by the Purchaser except at the Contractor's own risk and responsibility. Work may proceed on equipment, materials, computer hardware and software when the drawings and data therefore have been returned with no corrections or exceptions noted; or when drawings have been returned with corrections or exceptions noted, provided the work is performed in accordance with the Purchaser's notations.

If changes are made at the project site to the equipment to correct installation errors, due to design changes or wiring revisions, revised drawings indicating the changes made shall be prepared and submitted to the Purchaser..

1B.5.2 Final Markup Drawings & Materials. After receipt from the Purchaser of drawings or other Contractor prepared materials with no corrections or exceptions noted, the Contractor shall transmit ____ (__) copies to the Purchaser for final distribution.

1B.6 INSTRUCTION MANUALS/DOCUMENTATION. The Contractor shall furnish instruction manual and documentation bound in a binder suitable for long term rough usage. Front covers of the manuals shall be permanently marked with lettering indicating Owner's name, plant name, name of software and name of manufacturer.

The manuals shall include the following information specific to each version of the software supplied by the Contractor:

- Table of Contents and index tabs.
- Name, address, telephone number, and fax number of the local and national service representative and supplier and 24 hour emergency service contact.
- Specifications including minimum and recommended hardware requirements.
- Description of the software.
- Installation instructions.
- Operating instructions.
- Software troubleshooting guidelines.
- Data backup and recovery guidelines.

The above listed requirements are the minimum. Additional information that is necessary for proper installation, operation and utilization of the software shall also be included.

One copy of the instruction manual shall be submitted to the Purchaser for review. After the manual has been approved, the final ____ (__) copies should be sent to the Owner.

Section 1C - SCHEDULE

1C.1 GENERAL. This section covers the schedule and scheduling requirements for performance and completion of the work included under this Contract.

1C.2 SCHEDULE. Milestone, payment and delivery schedules are defined below. The completion dates indicated are essential to the work under this Contract and to the coordination and continuity of other Purchaser work activities..

The listing of activities and dates is not intended to be a complete or detailed listing of all work under this Contract or of all interfaces with the work of other contractors.

It is understood and agreed that the dates shown within the Milestone and the Payment and Delivery Schedules are the latest feasible completion dates and that earlier dates may be attained as agreed to by the Purchaser and the Contractor.

Milestone	Date
Issue Request For Proposal	
Receive Bidder Responses to RFP Including Detailed Data Input Requirements	
Contract Award	
Software Installation	
Software Training	

1C.3 PRELIMINARY SCHEDULE. The Contractor shall submit, as part of his proposal, a preliminary schedule of the work. This preliminary schedule shall include a bar chart showing all major activities. The Contractor shall also submit with his proposal a work plan, which describes the activities in sufficient detail to clearly show his understanding of the concentrated effort and coordination required to complete the work by the scheduled contract completion date.

1C.4 CONTRACTOR'S DETAILED SCHEDULE. Within 5 days after the date of contract award, the Contractor shall submit a detailed schedule. The detailed schedule shall be based upon the dates specified in the schedule included herein.

The detailed schedule shall be in bar graph form acceptable to the Purchaser.

The detailed schedule shall contain all activities of the plan, including acquisition of special equipment, materials, computer hardware, and computer software. For all equipment and materials supplied by the Contractor especially for this project, the schedule shall include the sequence of activities including issuance of purchase orders, preparation of drawing markups and delivery. Each activity shall be identified on the schedule by a descriptive title and shall be assigned an estimated number of working days required and an expected completion date.

Schedules returned to the Contractor for revision or correction shall be resubmitted for review within ____ calendar days. Upon acceptance by the Purchaser of the detailed schedule of activities, the Contractor will be responsible for maintaining such schedule.

Section 1D – OTHER REQUIREMENTS

1D.1 GENERAL. These requirements apply in general to all equipment, computer hardware, and software and are supplementary to the technical requirements. If requirements specified herein are in conflict with the requirements specified in the technical requirements, the technical requirements shall govern to the extent of such conflict.

The Contractor's proposal shall be based upon the use of equipment and materials complying fully with the requirements specified in this Section. It is recognized that the Contractor may have standardized on the use of certain components, materials, processes, or procedures different than those specified herein. Alternates in addition to the base proposal on the basis of supplying the Contractor's standard components, materials, processes, or procedures will be considered. The alternate proposal shall clearly stipulate the alternate proposed, the specific exceptions to the specification, and the price change applicable for supplying such alternate.

1D.2 REFERENCED STANDARDS. Reference to the standards of any technical society, organization, or association, or to the laws, ordinances, or codes of governmental authorities shall mean the latest standard, code, or specification adopted, published, and effective at the date of taking bids unless specifically stated otherwise in this specification.

The specifications, codes, and standards referenced in this specification (including addenda, amendments, and errata) shall govern in all cases where references thereto are made except where they conflict with this specification. In case of conflict between the referenced specifications, codes, or standards and this specification, the latter shall govern to the extent of such difference.

All engineered equipment manufactured under this specification and the associated engineering for the manufacture shall be in accordance with the codes and standards detailed in the specification sections and the following codes and standards.

For engineered equipment manufactured under this specification and the associated engineering for that engineered equipment, reference in these specifications is made to only USA standards, codes, and specifications, and the equipment, materials, and workmanship furnished under these specifications shall be in accordance with the standards, code, or specification designated. Equivalent standards, codes and specifications of other authorities will be considered when submitted to the Purchaser or Owner's Representative in the English language. If the proposed substitute standards, codes, or specifications are acceptable to the Purchaser and the Owner's Representative, their use will be authorized in writing. In the event the substitute standards, codes, or specifications are not acceptable, the work shall proceed in accordance with USA standards, codes, and specifications designated in the specifications.

All materials furnished and installation procedures used under this specification shall conform with accepted good engineering practice, the codes and standards detailed in the specification sections, and the requirements of the applicable Romanian standards.

1D.2.1 List of References. All engineered equipment, engineering, materials, and installation provided under this specification shall be in accordance with the following codes and standards.

Works	**In Accordance With**
Software Development & Testing	ISO 9001 Guidelines

1D.3 MATERIALS. Unless specifically provided otherwise in each case, all materials, equipment, computer hardware, and computer software furnished for permanent installation shall conform to applicable standard specifications and shall be new, unused, and undamaged.

1D.4 IDENTIFICATION. All shipping notices, computer hardware and software, and other documents pertaining to the equipment and materials furnished under this specification shall be identified as follows:

ELCEN
ADDRESS

Attention: CONTACT NAME

1D.5 SHIPMENTS. All shipments shall be F.O.B. destination, freight allowed.

The Contractor shall discuss with the Purchaser the routing of shipments and shall route the same as indicated by the Purchaser provided freight rates are no greater than by other routes. Shipments are accepted Monday through Friday from _____a.m. to _____p.m.

All shipments shall be delivered to:

ELCEN
PLANT ADDRESS

Attention: CONTACT NAME

The equipment shall be shipped boxed, crated, or otherwise protected against damage during shipment, handling, and storage at the Project Site. Openings shall be closed with caps, plugs, or other suitable closure devices suitable for rough usage. Packaging shall be suitable to prevent moisture or water damage during shipment and outdoor storage at the Project Site.

The shipping forms must include the following content:

- Fiscal bill (invoice);
- Shipping notice;
- Certificate of origin;
- Factory testing certificate;
- Quality and conformity certificate;
- Guarantee certificate;
- EUR certificate;
- Transport certificate;
- Import statement value;
- Insurance policy-"for all risks"

1D.6 SHIPPING NOTICE. The Contractor shall submit to the Purchaser duplicate copies of shipping notices describing each shipment of material, equipment, computer hardware, or software. Climate control requirements shall be included. The shipping notices shall be mailed to arrive approximately ____ days ahead of the estimated shipment arrival. The addressee for each shipping notice will be CONTACT NAME.

1D.7 MATERIALS LIST. The Contractor shall prepare and submit with the first shipping notice duplicate copies of an itemized materials list covering all material, equipment, computer hardware and software furnished under this specification. The materials list shall be in sufficient detail to permit an accurate determination of the completion of shipment.

1D.8 CORRECTION OF ERRORS. Equipment and materials shall be complete in all respects within the limits herein outlined. All errors or omissions required to be corrected in the field shall be done by the Contractor or his duly authorized representative at the Contractor's expense.

1D.9 QUALITY ASSURANCE. The Contractor shall maintain a quality assurance program that provides that equipment, materials, and services under this specification whether manufactured or performed within the Contractor's plant or at any other source shall be controlled at all points necessary to assure conformance to contractual requirements. The program shall provide for the prevention and ready detection of discrepancies and for timely and positive corrective action. The Contractor shall make objective evidence of quality conformance readily available to the Purchaser. Instructions and records for quality assurance shall be controlled.

Section 2A – TECHNICAL REQUIREMENTS

2A.1 GENERAL INTENTION. It is the intention of the Purchaser to purchase a comprehensive Data Historian package for manual collection of operating data in an electronic format. The primary purpose of this system will be to improve data collection, data review, data analysis/trending, and data storage practices.

The system shall be designed with emphasis on ease of use by the plant operating and engineering staff. The system shall be capable of providing long-term storage (approximately 1 year of data) of operating data to plant performance engineers, plant management, and corporate planning staff. The program shall be capable of sharing results offline via electronic or hardcopy reports, spreadsheets, etc. The system components shall be designed to operate in a power plant environment with a high degree of reliability.

2A.2 INPUT DESCRIPTIONS. The Owner intends to utilize the Data Historian to store readings from process instrumentation connected remote analog or digital data acquisition system. The unit currently uses a (DESCRIBE IN DETAIL OR REMOVE THIS SENTENCE AS APPLICABLE) for automatic collection of plant performance data. The historian should be sized to support a minimum of _____ and a maximum of _____ data points on a minute-by-minute basis.

2A.3 GENERAL SOFTWARE REQUIREMENTS. Data collected from the _____ data acquisition system be transferred to a Windows ___ based computer or Oracle workstation for long-term storage, data trending, and other supported operations. For ease of use, the supporting software shall be designed to have the appearance of standard Windows applications. The graphical user interface (GUI) shall allow quick and easy navigation through the system. The GUI shall be consistent among all screen displays and tools to the maximum extent possible. Normal user interaction with the system shall be through the use of a mouse or keyboard.

Any required site license fees for the Data Historian shall be included as part of the services to be provided by the Contractor under this Contract. All software updates issued by the Contractor within the first year after will be included in the initial purchase price and will be installed by the Purchaser, as soon as the updated software has been extensively beta tested and is available for distribution and use. Any third party software required by the Data Historian (with the exception of the Windows based operating system) shall be included in the initial purchase price of the system and shall be covered by the warranty.

2A.4 GENERAL HARDWARE REQUIREMENTS. The software for each unit shall be installed on a separate server computer provided by the Contractor (CHANGE THIS TO PURCHASER IF ELCEN CHOOSES TO PROVIDE THEIR OWN HARDWARE.) Minimum and recommended hardware requirements will be provided by the Supplier as specified in Section B-2 of this specification.

2A.5 INSTRUMENTATION. Unless specified otherwise in other sections, all instrumentation components furnished with the equipment shall be constructed to withstand the temperatures, pressures, and corrosive conditions encountered in the actual service. Instruments rated for hazardous area classifications shall be furnished where required by applicable code or the detailed specifications.

2A-6 CONTROL POWER. Electrical power for control and instrumentation will be a nominal 240 volt, single-phase, 50 hertz, alternating current. The Contractor shall provide any devices required for proper operation and protection of the equipment during electrical power supply and ambient temperature fluctuations described in the following paragraphs.

2A.7 TRAINING. At the Purchasers election, optional on-site training shall be provided to personnel who will be responsible for installing, operating and maintaining the DATA HISTORIAN Software. Training sessions shall be customized to fit the needs of each user, including operators, engineers, supervisors, and plant managers. Each class participant shall be provided with training materials intended for reference and instructional purposes. A description of the training program, schedule and duration of training sessions shall also be provided in the Contractor's proposal. All training material shall be reviewed and approved by the Purchaser.

The Contractor shall also include a CD-ROM disk containing all training documents.

2A.8 TECHNICAL SUPPORT. The Contractor shall have technical support available in accordance with the following subsections.

2A.8.1 Telephone Support. The Contractor shall have technical support available during normal business hours. The Contractor shall have the ability when necessary to support the system via modem or network dial up during business hours.

2A.8.2 On-Site Support. The Contractor shall provide on-site support in accordance with the term of Section 1A.5.2 Contractor's Field Technical Services. Labor and expenses for other Owner requested on-site support will be provided in accordance with the rates specified in the Financial Proposal.

FINANCIAL PROPOSAL

ELCEN

GENERATING PLANT NAME

DATA HISTORIAN

RFP NO.
PROJECT

BID ISSUE
(REV 0)

building a world of difference™ | BLACK & VEATCH

FP - COST PROPOSAL

FP.1 <u>TOTAL FIRM PRICE</u>. Contractor shall provide a total firm price for all materials, labor and services covered by under the base proposal. All prices shall be specified in Euro (€).

TOTAL FIRM PRICE _____

FP.2 <u>PRICE BREAKDOWN</u>. Contractor shall provide a price breakdown as follows for all items included in the base and optional scope of service. All prices shall be specified in Euro (€).

Item	Price
Hardware (List type, number, and cost of each component. Include manufacturer and model number.) REMOVE IF TERMOELECTRICA IS SUPPLYING THEIR OWN HARDWARE. a) b) c) Total	
Software License Fee For [redacted] Points and [redacted] Concurrent Users	
Annual Maintenance Fee	
Users Group Membership Fee	
On-site Training	
On-Site Testing and Reporting	
On-Site Engineering/Startup Services	
Total Man-Days in On-Site Engineering/Startup Services	Man-Days
Total Man-Days in On-Site Training	Man-Days
Other Optional Services or Software Options (describe). a) b) c)	

FP.3 <u>LABOR RATES</u>. Contractor shall provide a labor rates by position applicable to the project. All rates shall be specified in Euro (€) per man-hour. All expenses shall be at actual cost.

Position	Straight Time	Overtime	Sundays & Holidays
Project Manager			
Project Engineer			
Engineer			
IT Specialist			
Administrative Support			

Contractors Field Technical Services Personnel			
Other (As defined by Contractor)			

FP.4 EXCEPTIONS TO THE SPECIFICATION. The Contractor shall certify that he agrees to all provisions of the Specification and Bid Documents and clearly list any exceptions under the title of EXECPTIONS in the Proposal. Bidder's terms and conditions are not considered specific exceptions. If exceptions are taken, identify the page(s) of the proposal that apply.

FP.5 SUBCONTRACTORS. This bid is based upon the use of the following subcontractors:

Trade	Subcontractor

All technical requirements and all commercial terms and requirements must be followed by all subcontractors as well as by the Contractor.

SIGNATURE OF BIDDER

Corporation Name: _____

By Authorized Person: _____

Title: _____

Business Address: _____

SPECIFICATIONS
AND
DOCUMENTS

ELCEN

GENERATING PLANT NAME & UNIT NUMBER

COMBUSTION OPTIMIZATION SYSTEM

RFP NO. _____
PROJECT_____

BID ISSUE
(REV 0)

building a world of difference™ | BLACK & VEATCH

TABLE OF CONTENTS

	Page
A - GENERAL INFORMATION	
A.1 INSTRUCTIONS TO BIDDERS	A-1
A.2 RIGHT TO REJECT	A-1
A.3 VALIDITY	A-1
A.4 PROJECT PROCEDURES	A-1
A.4.1 Correspondence	A-1
A.4.2 Project Team	A-2
A.4.3 Scope Change Document	A-2
A.4.4 Invoicing	A-2
A.4.5 Warranty	A-2
A.4.6 Performance Guarantee	A-3
A.4.7 Acceptance Documentation	A-3
A.4.8 Insurance	A-3
B – BID DATA	
B.1 GENERAL	B-1
B.2 COMBUSTION OPTIMIZATION SYSTEM DATA	B-1
Section 1A – SCOPE OF WORK	
1A.1 GENERAL	1A-1
1A.2 WORK INCLUDED UNDER THIS SPECIFICATION	1A-1
1A.2.1 Miscellaneous Materials and Services	1A-2
1A.3 WORK NOT INCLUDED UNDER THIS SPECIFICATION-	1A-3
1A.4 WORK INCUDED AS OPTIONS UNDER THIS SPECIFICATION-	1A-3
1A.5 CONTRACTOR'S SERVICES	1A-3
1A.5.1 Submittal of Engineering Data	1A-3
1A.5.2 Contractor's Field Technical Services	1A-4
1A.5.3 Implementation Conference	1A-4
1A.6 LANGUAGE, NUMBERS, AND SYMBOLS	1A-4
Section 1B – DESIGN DATA AND DRAWINGS	
1B.1 GENERAL	1B-1
1B.2 CORRESPONDENCE	1B-1
1B.3 REVIEW OF ENGINEERING DATA	1B-1
1B.4 DESIGN DATA	1B-1
1B.5 DRAWINGS & OTHER CONTRACTOR PREPARED MATERIALS	1B-2
1B.5.1 Drawing & Material Submittal	1B-3
1B.5.2 Final Markup Drawings & Materials	1B-3
1B.6 INSTRUCTION MANUALS/DOCUMENTATION	1B-3

Section 1C– SCHEDULE

1C.1 GENERAL	1C-1
1C.2 SCHEDULE	1C-1
1C.3 PRELIMINARY SCHEDULE	1C-1
1C.4 CONTRACTOR'S DETAILED SCHEDULE	1C-1

Section 1D – OTHER REQUIREMENTS

1D.1 GENERAL	1D-1
1D.2 REFERENCED STANDARDS	1D-1
1D.2.1 List of References	1D-2
1D.3 MATERIALS	1D-2
1D.4 IDENTIFICATION	1D-2
1D.5 SHIPMENTS	1D-2
1D.6 SHIPPING NOTICE	1D-3
1D.7 MATERIALS LIST	1D-3
1D.8 CORRECTION OF ERRORS	1D-3
1D.9 QUALITY ASSURANCE	1D-3

Section 2A – TECHNICAL REQUIREMENTS

2A.1 GENERAL INTENTION	2A-1
2A.2 UNIT DESCRIPTIONS	2A-1
2A.3 DCS DESCRIPTION	2A-2
2A.4 GENERAL SOFTWARE REQUIREMENTS	2A-3
2A.5 GENERAL HARDWARE REQUIREMENTS	2A-4
2A6 INSTRUMENTATION	2A-5
2A.7 CONTROL POWER	2A-5
2A.8 TRAINING	2A-5
2A.9 TECHNICAL SUPPORT	2A-6
2A.9.1 Telephone Support	2A-6
2A.9.2 On-Site Support	2A-6

Section 3A – INSTALLATION AND CONSTRUCTION Not Used

A - GENERAL INFORMATION

It is the intention of the Owner to purchase a comprehensive Combustion Optimization System for PLANT NAME and UNIT NUMBER. The primary purpose of this system is to improve efficiency/heat rate of the unit and to reduce NOx and CO emissions. In addition to improving efficiency and reducing NOx/CO emissions, the system shall use other critical parameters (e.g., opacity, mill outlet temperatures, SH/RH temps, etc.), as required, to constrain the system to produce accurate optimization recommendations. Current plans are to install _____ (LIST NEW INSTRUMENTS IF ANY) before the installation of a Combustion Optimization System. However, in the event the installation of these instruments is delayed, the installed system shall be capable of optimizing _____ if analyzers are installed and operating prior to the conclusion of the one-year warranty period.

The system must be capable of interfacing with a _____ DCS system. The system must be capable of retrieving real-time data directly from the DCS or historical data from the _____ historian, optimizing various plant combustion performance parameters, and operating in closed-loop control. The system shall be designed with emphasis on ease of use by the plant operating personnel, shall be capable of providing detailed performance analysis to plant performance engineers, and shall be accessible from other on-site locations by Owner personnel via a local area network (LAN). The system shall be designed to operate in a power plant environment with a high degree of reliability.

A.1 INSTRUCTIONS TO BIDDERS. The Contractor shall provide a complete proposal detailing but not necessarily limited to a description of the services, exceptions and/or clarifications to the proposal, fees, rate structures, and terms and conditions which will govern the project. The Contractor will provide a description of the work package. THE PROPOSAL SHALL INCLUDE THE ESTIMATED MAN-HOURS AND ASSOCIATED COSTS FOR THE PROJECT; THE COSTS SHALL BE CONSIDERED AS FIRM PRICE, WITH NO INCREASES BEING ALLOWED EXCEPT FOR AUTHORIZED CHANGED IN THE SCOPE OF WORK.

A.2 RIGHT TO REJECT. The right is reserved by ELCEN to reject any or all proposals. In addition, ELCEN may elect to cancel the project if it is determined necessary by ELCEN or if funding is not available.

A.3 VALIDITY. Bidder's proposal shall remain valid for a period of _____ (___) days commencing on the proposal date.

A.4 PROJECT PROCEDURES. The following items and services shall be furnished as optional work under this specification:

A.4.1 Correspondence. All correspondence and documents from the Contractor to ELCEN during the proposal process shall be addressed to:

Type name and address of ELCEN contacts here.

After award, a formal distribution list for letters, transmittals, etc. will be created.

A.4.2 **Project Team**. The Contractor shall have a dedicated Project Manager responsible for the coordination of all project related activities. The Project Manager identified for this project by the Contractor shall remain in that position throughout the project. Any changes in this key position shall be with the approval of ELCEN.

The Contractor shall include resumes of personnel who would be assigned to the project, project team organization, job descriptions, project experience, and other information that is considered pertinent.

ELCEN reserves the right to request personnel changes if performance/experience becomes an issue.

A.4.3 **Scope Change Document** . For any modified scope changes or additions to the Contractor work, the Contractor will provide written notification per the contract procedure. ELCEN reserves the right to have any extra work performed on a firm price, not-to-exceed or cost-plus basis. The Contractor will submit with his proposal a complete rate structure applicable to any work to be performed under this agreement.

The Scope Change Document shall describe the reason for change, the person who requested the change, the original scope and man-hour cost, and the new scope and man-hour cost.

Each Scope Change Document shall be consecutively numbered. Any effects on the engineering schedule and overall project schedule shall be described. **WRITTEN APPROVAL FROM ELCEN IS REQUIRED BEFORE PROCEEDING WITH THE SCOPE CHANGE**.

A.4.4 **Invoicing**. The Contractor's proposal is to include a description of their invoicing procedures. ELCEN will issue a purchase order to the selected Contractor. Invoices not complete in reference or lacking in backup information will be rejected.

Progress and/or milestone based payments will be made in an amount equal to _____ (____) percent of Work completed with the balance being retainage.

Final payment will be made upon completion and acceptance of the work. Retainage will be paid after all submittals have been received and accepted following final payment.

A.4.5 **Warranty**. The Contractor shall provide a warranty on all the hardware, software and services rendered to ensure that the Combustion Optimization System meets the following requirements:

Be free from defects in design, material, workmanship and title;

Be of the kind, quality and capability designated or described in the Contract;

Perform in the manner set forth in or required by the Contract; and

Have been produced processed, delivered and sold or licensed in conformity with all applicable federal, state and local laws, administrative regulations and orders. The Contractor shall execute, certify and deliver to ELCEN any documents as may be required to effect or evidence compliance with such federal, state and local laws.

Except for consumable items, the warranty period shall be _____.

During the warranty period, the Contractor shall provide free of charge telephone support for ELCEN users and remote support for Software imperfections.

A.4.6 Performance Guarantee. The performance guarantee shall be in the form of a bank letter of credit for 10% of the contract value, valid until receipt and approval of the Acceptance Documentation; or by retention of 10% of the amount of each invoice, retention to be paid upon receipt and approval of the Acceptance Documentation. If in the form of a bank letter of credit, the performance guarantee should be issued by a bank in Romania, or by a bank abroad with a correspondent in Romania.

A.4.7 Acceptance Documentation. The Contractors shall provide to the Purchaser the Acceptance Documentation (at the end of executions works, at the end of commissioning, at the end of the guarantee period) in accordance with the Romanian legislation in force.

A.4.8 Insurance. The Contractor shall provide full insurance of all software, hardware, etc, against losses or damages during execution, transportation, storage, testing, and commissioning.

B - BID DATA

B.1 GENERAL. Each Bidder shall submit complete and definitive information on his proposal offering in sufficient detail to permit a complete technical analysis of the Proposal.

The requirements for information contained in this Section are basic. Additional information shall be provided as requested by the Purchaser.

The scope of supplementary information and equipment data requested herein shall be included in the Proposal to the fullest extent possible at the time of bid submittal. As a minimum, sufficient proposal data shall be submitted to demonstrate compliance with this specification, and to allow a comprehensive evaluation of the bid. Proposals lacking sufficient data to satisfy these requirements will be considered non-responsive. The successful Bidder shall complete all data submittal requests and Proposal data entries for inclusion in the Purchase Order documents prior to the Award of Contract.

B.2 COMBUSTION OPTIMIZATION SYSTEM DATA. Submit Data required on the following pages. Where options are indicated in the PROPOSAL FORM or BID DATA, provide complete information for each option.

Entries on the BID DATA forms shall be entered electronically in the MS Word file contained on the CD-ROM or diskette included with this specification. A hardcopy of the BID DATA will be included with each proposal. Electronic copies of the BID DATA file will be provided to UTILITY NAME and Black & Veatch along with the required numbers of proposals.

Electronic copies of the files may be submitted by CD-ROMs or 3.5 inch diskette. Electronic copies submitted with the proposal will be virus checked and will be certified to be virus free.

REQUIREMENT DESCRIPTION	CONTRACTOR RESPONSE
GENERAL	
Describe your implementation strategy in detail	
Describe in detail the assistance you will need from the Purchaser's staff in the installation and implementation of the software package. What are the tasks the plant staff must perform in the data gathering, parametric testing, system development and initial installation of the system? Include an estimate of hours per week involvement by plant staff.	
Detail the terms under which source code will be made available for exclusive purpose of self-maintaining the optimization system software.	
How much on-site support time will you provide during system installation and tuning in preparation for on-line operation? Describe and identify the make-up of the optimal project team including individual skill sets.	
Describe your on-going support (e.g., Help Desk, hot line, newsletters, user groups, internet, e-mail, etc.). Describe your procedure for problem resolution. What are the lead time requirements and criteria for on-site technical support?	
Would you use third party contractors or subcontractor for any of the services required under the specification? If so, for what parts of the project?	
Can plant staff modify the optimization models and add/delete input and output variables or will they be required to use your services? Explain.	
What is the nature of outside help needed by plant staff to create new models?	
Can plant staff retrain or retune the system models or will they be required to use your services? Explain.	
What is the nature of outside help needed by plant staff to maintain the existing software?	
What is the nature of outside help needed by plant staff to update the existing software? (i.e., new version release)	
Is there a User's Group. If yes, please indicate the number of members.	
Number of current software users.	

REQUIREMENT DESCRIPTION	CONTRACTOR RESPONSE
Describe the overall system architecture including system size, redundancies, I/O quantity (if applicable), interfaces with other systems, UPS requirements / type (if applicable), backup requirements, list of equipment, etc.	
OPTIMIZATION TECHNOLOGY	
How often does the system send optimized setpoints or biases to the DCS? What is the minimum cycle time for this operation?	
How fast can the system calculate new optimized setpoint or biases?	
What is the expected cycle time required for the model to optimize NOx emissions, efficiency/heat rate, and CO on-line?	
What is the minimum cycle time required for the model to optimize NOx emissions, efficiency/heat rate, and CO?	
How does the operator interact with the system in open-loop advisory control? Explain.	
How does the operator interact with the system in closed-loop supervisory control? Explain.	
Do you differentiate between the terms "retuning" vs. "retraining"? If so, explain your definition.	
Does retuning or retraining require vendor support?	
Does the optimization system have on-line retuning or retraining capability? If so, please answer the following: • How often is the system retrained? • Is retraining a manual or automatic process? • How long does system retraining take?	
Does the optimization system require retuning or retraining in order to handle: • Fuel Quality Changes? • Equipment Degradation? • Instrumentation Drift?	

REQUIREMENT DESCRIPTION	CONTRACTOR RESPONSE
• Weather Variations? • Pulverizer Out of Service? • Major Equipment Modifications? • New Equipment Replacing Old Equipment?	
Any additional comments about system retuning or retraining? Elaborate.	
Describe the procedure for updating existing models and creating new ones.	
How frequently are existing models updated?	
Is outside help required to update the models? Explain.	
Does the optimization system have the ability to handle individual burner controls if the data is available from the DCS?	
Can optimization system keep up with a load following unit?	
What is the maximum ramp rate the system will optimize correctly?	
Does the optimization system require CO monitors to be available and in service?	
Do you recommend CO monitors be available and in service? • If so, where should the CO measurement be taken? Explain. • If so, what type of CO monitor is preferred? Explain.	
Will a unit outage be necessary for system installation and start-up? If so, when will outage need to occur and how long will it need to last? Explain.	
Is parametric or performance test data necessary to build and train the models? If not, explain.	
Are there any special unit operating conditions required for data collection or parametric testing? If so, explain.	

REQUIREMENT DESCRIPTION	CONTRACTOR RESPONSE
Does the optimization system extrapolate beyond the range of historical performance data? If so, explain.	
If On-line, real time LOI monitoring is available, how do you propose to monitor or determine the operating LOI limit and optimize based on that limit? Describe your methodology.	
Does the system optimize properly after a change in fuel quality without instrumentation or input data notification? If so, explain how your system detects and optimizes fuel quality changes.	
Is the system capable of performing static / dynamic backups without impacting the users?	
Can modifications be made to the system from any client computer connected to the LAN? Are proper passwords required?	
Can the system balance multiple optimization objectives (efficiency/heat rate, NOx, and CO) simultaneously using simple operator inputs for priority of each objective?	
How do the models deal with unplanned operating conditions of the unit?	
How are new models implemented that are different from existing models (e.g., different burner configurations, different fuels)?	
How are models for new applications created and implemented with the current system (e.g.,Steam Cycle, sootblowing, ESP, etc.)?	
How do the models "re-optimize" after changes to optimization objectives and constraints? Explain.	
Does it bias the models or actually tune them? If tuning is performed is this done on-line or off-line? Manually or automatically? Explain.	
Will rapid unit load change cause system to suspend or shut off? Is this an owner definable parameter?	

REQUIREMENT DESCRIPTION	CONTRACTOR RESPONSE
Describe your approach to unit optimization. i.e.: First principle models, statistical models, neural network models, advanced process control, on-line model training, etc. and why you believe this approach is best for optimization. Explain any standard methodology and technology you would expect to use on this project.	
DCS, HISTORIAN & COMMUNICATION	
How many DCS inputs are required for a typical installation optimizing NOx emissions, efficiency/heat rate, and CO?	
What is the maximum number of DCS inputs the optimization system can handle?	
How many outputs are returned to the DCS for a typical installation optimizing NOx, efficiency/heat rate, and CO?	
What is the maximum number of outputs the optimization system will return back to the DCS?	
The Purchaser's desktop PCs currently utilize MS Office (indicate the version) software products. Explain how the proposed system can export data to MS Excel, Access and Word.	
Is system capable of exporting data in a comma or space delimited format?	
_____ is the Purchaser's standard protocol for communications. Does the system support this protocol? If no, what protocols are supported?	
How does your system communicate with the _____ DCS? Explain in detail. Does your system require communication through the ____ historian? What other communication software and interfaces are required?	
From the DCS graphics screen display, does the operator have the ability to: • Switch the system off and on? • Stop or interrupt the system while it writes control	

REQUIREMENT DESCRIPTION	CONTRACTOR RESPONSE
instructions to the DCS? • Switch between open-loop advisory and closed-loop supervisory control? • Change the optimization target variables (e.g., NOx emissions, CO, and efficiency/heat rate)? • Redefine optimization objectives or weightings? • Add, remove, or change operating constraints? • "Lockout" input variables one at a time and have the system optimize with the remaining input variables?	
List any communication interfaces that will be necessary to interface the Optimization system and the plant DCS. Also explain why they are necessary and list the associated development costs if any.	
SOFTWARE & HARDWARE	
Are graphical data analysis software and visual graphic tools available on the system server computer? If yes, describe the different tools available.	
What types of graphs are available for viewing and printing from the graphic software tools available on the system server computer? • Bar Charts (Yes/No) • Histograms (Yes/No) • Scatter Graphs (Yes/No) • Line Graphs (Yes/No) • X-Y Graphs (Yes/No) • 3D Graphs (Yes/No) Other _____	
Does the system provide trending of boiler support equipment degradation for performance and maintenance engineer's oversight?	
Does your system perform cause and effect performance analysis?	
Is a context sensitive help system available for the system software stored on the server computer? If yes, describe.	
How does your system communicate with the _____ historian?	

REQUIREMENT DESCRIPTION	CONTRACTOR RESPONSE
How does your system communicate with the ____ performance monitoring system? Remove if not applicable.	
The Purchaser intends to install client software on multiple computers. How many simultaneous users can access the system via client PC's?	
Does the system require client computers to use client communication software such as Hummingbird Exceed?	
Do you maintain a list of known bugs and their correction? Can the list be made available at the request of the Owner?	
How frequently are software releases scheduled? Are the software releases provided as part of the warranty?	
Are new software releases tested at beta sites prior to general release? Name a beta site where your software updates are routinely tested.	
____ is the Purchasr's preferred operating system. What type of operating system does the optimization system require?	
If the optimization system operates on a personal computer under Windows NT/95/98/XP, is the system software currently OPC compliant? If not currently, when will the system become OPC compliant?	
What type of computer hardware will be provided with the optimization system? • Type and Number of Computer (Clients / Servers • Brand of Computer • Computer Model • Operating System and Version • CPU and Speed • Type of RAM • Amount of RAM • Size of Hard Drive • Brand of DVD-ROM • Speed of DVD-ROM • Brand of Monitor • Size of Monitor	

REQUIREMENT DESCRIPTION	CONTRACTOR RESPONSE
• Brand of Modem • Speed of Modem • Brand of 3D Graphics Card • Amount of Graphics Card RAM • Brand of Color Printer • Speed of Color Printer • Printer Model • Brand of CD Read/Write Burner (CD-RW) • Speed of CD-RW Burner	
Does the system software allow "what if" studies to be performed without affecting current operation? Explain.	
Do you guarantee upward compatibility between software releases and communication interfaces?	
How much CPU loading is expected on the optimization server? Assume model is running and no clients are attached to the server.	

Section 1A - SCOPE OF WORK

1A.1 GENERAL. This section covers the general description, scope of work, and supplementary requirements for the work included under this specification.

It is the intention of the Owner to purchase a comprehensive Combustion Optimization System for PLANT NAME and UNIT NUMBER. The primary purpose of this system is to improve efficiency/heat rate of the unit and to reduce NOx and CO emissions. In addition to improving efficiency and reducing NOx/CO emissions, the system shall use other critical parameters (e.g., opacity, mill outlet temperatures, SH/RH temps, etc.), as required, to constrain the system to produce accurate optimization recommendations. Current plans are to install _____ (LIST NEW INSTRUMENTS IF ANY) before the installation of a Combustion Optimization System. However, in the event the installation of these instruments is delayed, the installed system shall be capable of optimizing _____ if analyzers are installed and operating prior to the conclusion of the one-year warranty period.

The system must be capable of interfacing with a _____ DCS system. The system must be capable of retrieving real-time data directly from the DCS or historical data from the _____ historian, optimizing various plant combustion performance parameters, and operating in closed-loop control. The system shall be designed with emphasis on ease of use by the plant operating personnel, shall be capable of providing detailed performance analysis to plant performance engineers, and shall be accessible from other on-site locations by Owner personnel via a local area network (LAN). The system shall be designed to operate in a power plant environment with a high degree of reliability.

The work included under this specification shall be supplied FOB PLANT NAME, PLANT LOCATION.

1A.2 WORK INCLUDED UNDER THIS SPECIFICATION. The work performed by the Contractor shall be to furnish Combustion Optimization Systems at PLANT NAME Unit(s) ____. The work under this specification shall include furnishing all equipment, materials, computer hardware and software, and supplying all services necessary to perform the work in accordance with the specifications, drawings, and other contract documents, except as specifically excluded under WORK NOT INCLUDED UNDER THIS SPECIFICATION. Items or services to be quoted as options to the base bid are listed under WORK INCLUDED AS OPTIONS UNDER THIS SPECIFICATION.

All equipment, material, computer hardware, software, and interfaces shall be furnished by Contractor as specified by Owner in this specification.

All work required for a complete Combustion Optimization System shall be furnished, except as specified otherwise in this specification. The equipment, materials, computer hardware, software, and interfaces to be furnished shall include, but not necessarily be limited to, the following major items:

Retrieve several months of historical data, if necessary, from the plant historian and determine if additional data is required to augment the data.

If additional data is required to characterize the full range of boiler operating conditions, a test plan shall be developed which defines the parametric testing requirements to effectively characterize the relationships between the operating input variables and optimized output variables (e.g., NOx, CO, and efficiency/heat rate).

Build system models that will use the specified input variables to produce optimized output variables that characterize efficiency/heat rate, CO and NOx. Opacity shall be used as a constraint.

Install the software for the Combustion Optimization system and setup the system models for optimization.

Interface the Combustion Optimization System to the Distributed Control System (DCS) at PLANT NAME Unit 1 _____ DCS or the _____ historian, depending on the Contractor's preferred method of data collection from the DCS.

Startup the Combustion Optimization System and operate the system in an open-loop advisory mode of operation until plant operating staff are comfortable with the system's optimized recommendations and control stability.

After acceptance of open-loop advisory operation by plant staff, operate the system in a closed-loop supervisory mode of operation and verify that optimization results are realistic, meaningful, and satisfactory to the plant staff.

Provide on-site training to all plant personnel who will be responsible for operating, maintaining, and using the Combustion Optimization System and tools.

Provide site acceptance test results to plant staff to demonstrate and validate full-system functionality and optional operation of the Combustion Optimization System.

Provide documentation for the Combustion Optimization System which should consist of all information required for Operators, Performance Engineers and System Administrators.

Provide the tools necessary for the Plant Staff to model and implement future optimization opportunities.

1A.2.1 Miscellaneous Materials and Services. Miscellaneous materials and services not otherwise specifically called for shall be furnished by the Contractor in accordance with the following:

All supporting hardware, third-party software, cables, connectors, and interfaces required to implement the Combustion Optimization System, connect the system to the _____ DCS and _____ historian, and connect the system's server computer to the plant's Local Area Network (LAN).

Additional cabinets and enclosures as specified herein.

1A.3 WORK NOT INCLUDED UNDER THIS SPECIFICATION. The following items of work will be furnished by the Purchaser (unless furnished as part of optional work under WORK INCLUDED AS OPTIONS UNDER THIS SPECIFICATION):

Construction and miscellaneous services and materials specified as furnished by the Purchaser.

Supply and installation of new instrumentation required or recommended as part of the bid process. Instrumentation will be purchased and installed under separate specifications.

Supply and installation of electrical power and control wiring, conduit, junction boxes, network hubs, and other electrical enclosures not integral to equipment supplied by the Contractor.

Personnel to conduct parametric testing of software based on Contractor's test plan.

Operating personnel for system startup and operation.

1A.4 WORK INCLUDED AS OPTIONS UNDER THIS SPECIFICATION. The following items and services shall be furnished as optional work under this specification:

If a sootblowing optimization module is not part of the base Combustion Optimization System and if an optional sootblowing optimization module is available by the Contractor, the Contractor may propose an option to include the sootblowing optimization module with the base system. The cost and project schedule impact of installing this module shall be included in the proposal.

Other optimization system modules deemed by Contractor to be of significant value to the Owner based on current operating practices, boiler and unit configuration, and other available fuel-related equipment systems, may be proposed as an option to the base system. A complete description of this optional module and the potential economic benefits to the Owner shall be included. The cost and project schedule impact of installing this module shall also be included in the proposal.

1A.5 CONTRACTOR'S SERVICES. The services called for in WORK INCLUDED UNDER THIS SPECIFICATION and the services inherent to any options purchased by the Purchaser as called for in WORK INCLUDED AS OPTIONS UNDER THIS SPECIFICATION shall be in accordance with the following:

1A.5.1 Submittal of Engineering Data. Drawings and other engineering data for the specified equipment and materials are essential to the design and implementation of the entire project. The Contractor shall submit drawings and engineering data in accordance with the schedule and requirements specified herein to assure compliance with the overall installation and operating schedule.

Two weeks after receipt by Purchaser for review of drawings and engineering data shall be included in the Contractor's design, procurement, and delivery schedule.

1A.5.2 Contractor's Field Technical Services. The Contractor shall furnish the services of one or more technical service representatives when requested by the Purchaser. The service representatives shall be technically competent and experienced in the installation and operation of the system, and authorized by the Contractor to perform the work stipulated. The Contractor's technical representative shall be responsible for all on-site work.

As part of the base scope of the work, the Contractor's technical service representatives shall provide periodic assistance and direction to the Purchaser and shall inspect the computer hardware and software after installation and make any needed changes or adjustments to assure proper operation. They shall furnish written certification to the Purchaser that the system has been inspected and adjusted by them or under their direction and that it is ready for service, all of which shall be done before initial operation of the system.

The service representatives shall also be present during data collection, parametric testing, installation of hardware and software, testing of system communication with the DCS or historian, operator graphics display screen modifications, initial operation of the system in open- and closed-loop, system validation, and acceptance testing. The technical service representative shall instruct the plant personnel in the proper operation of the system.

1A.5.3 Implementation Conference. The Contractor's technical service representative shall attend an implementation conference at a time and place selected by the Purchaser to discuss matters relative to the execution of this Contract. The Contractor's technical service representative shall attend additional design conferences as required by the Purchaser thereafter to expedite the work.

1A.6 LANGUAGE, NUMBERS, AND SYMBOLS.

All the documents of the offer and before signing the contract shall be in English. After signing the contract, all drawings, designs, specifications, manuals, operating instructions, statements, schedules, notices, documents, nameplates, and markings shall be in both the English and Romanian languages. All graphics developed by the Contractor shall be in the Romanian language. Windows operating system graphics may be supplied in English if a Romanian version is not available.

All units of measurement shall be stated in the SI - system. The Contractor shall further be required to employ in all drawings and submittals the same symbols and designations as are used by the Purchaser.

Section 1B – DESIGN DATA AND DRAWINGS

1B.1 GENERAL. This section stipulates the requirements for engineering data and drawings which the Contractor shall submit for design information and review.

1B.2 CORRESPONDENCE. Correspondence on all technical matters shall be addressed to the Engineer as follows:

Name
Address

Attention: CONTACT NAME

Correspondence on all procedural and commercial matters shall be addressed to the Owner's Representative as follows:

ELCEN
UTILITY ADDRESS

Attention: ELCEN CONTACT NAME

Letters of transmittal shall accompany submittals of drawings and engineering data and shall include a list of the data included in the transmittal. Correspondence shall be identified with the project name, plant name and B&V project number. Transmittal of drawings and data shall be as specified in the article entitled DRAWINGS.

1B.3 REVIEW OF ENGINEERING DATA. The Purchaser's review of engineering data will cover only general conformity of the data to the specifications and documents, external connections and interfaces with existing equipment. This review does not indicate a thorough review of all dimensions, quantities, and details of the equipment, material, device, or item indicated or the accuracy of the information submitted. This review shall not be construed as relieving the Contractor from any responsibility for errors or deviations from the requirements of the contract documents.

1B.4 DESIGN DATA. The following design data shall be submitted as scheduled in Section 1C, unless otherwise specified:

A summary of the historical data retrieved from the plant's DCS to be used for baseline model development and analyzed by the Contractor shall be reviewed by plant staff to determine if the data collected is representative of the full operating range of the unit.

A test plan to determine if additional performance testing is required to effectively characterize the relationships between the operating input variables

and optimized output variables (i.e., efficiency/specific consumption (heat rate), NOx emissions, and CO).

A schematic diagram indicating the type of system connection to the plant DCS, _____ historian, and Performance Monitoring System.

Itemized list of control logic, setpoint, bias, constraint, and permissive changes to the plant DCS as a result of the Combustion Optimization System. The itemized list must be presented in sufficient detail for the plant personnel to determine the particular DCS graphic displays which will require modification.

Submittal and processing shall be as specified for drawings.

1B.5 DRAWINGS & OTHER CONTRACTOR PREPARED MATERIALS. It is not anticipated that any Contractor-prepared drawings will be required for this project. However, any Contractor-prepared drawings or other Contractor prepared materials shall be sufficient detail to indicate the arrangement, description, operation or use of the materials for the information specifically requested in the submittal schedule specified in Section 1C.

1B.5.1 Drawing & Material Submittal. ____(__) copies of the drawings and /or other contractor prepared materials shall be submitted to the Purchaser as follows:

_____copies to:
ELCEN
Address

Attention: Contact

Markups reviewed by the Purchaser will be returned to the Contractor with corrections or exceptions clearly marked. The Contractor shall make the changes noted thereon and copies of the corrected drawings or data shall be submitted for review in the same manner as the original submittal.

When the drawings or other Contractor prepared materials are returned to Contractor with no corrections or exceptions noted the Contractor shall submit versions for final distribution as specified hereinafter under Final Markup Drawings and Contractor Prepared Materials..

No work shall be performed in connection with the installation of equipment, materials, computer hardware and software until the drawings and data have been reviewed by the Purchaser except at the Contractor's own risk and responsibility. Work may proceed on equipment, materials, computer hardware and software when the drawings and data therefore have been returned with no corrections or exceptions noted; or when drawings have been returned with corrections or exceptions noted, provided the work is performed in accordance with the Purchaser's notations.

If changes are made at the project site to the equipment to correct installation errors, due to design changes or wiring revisions, revised drawings indicating the changes made shall be prepared and submitted to the Purchaser..

1B.5.2 Final Markup Drawings & Materials. After receipt from the Purchaser of drawings or other Contractor prepared materials with no corrections or exceptions noted, the Contractor shall transmit ____(__) copies to the Purchaser for final distribution.

1B.6 INSTRUCTION MANUALS/DOCUMENTATION. The Contractor shall furnish instruction manual and documentation bound in a binder suitable for long term rough usage. Front covers of the manuals shall be permanently marked with lettering indicating Owner's name, plant name, name of software and name of manufacturer.

The manuals shall include the following information specific to each version of the software supplied by the Contractor:

- Table of Contents and index tabs.
- Name, address, telephone number, and fax number of the local and national service representative and supplier and 24 hour emergency service contact.
- Specifications including minimum and recommended hardware requirements.
- Description of the software.
- Installation instructions.
- Operating instructions.
- Software troubleshooting guidelines.
- Data backup and recovery guidelines.

The above listed requirements are the minimum. Additional information that is necessary for proper installation, operation and utilization of the software shall also be included.

One copy of the instruction manual shall be submitted to the Purchaser for review. After the manual has been approved, the final ____(__) copies should be sent to the Owner.

Section 1C - SCHEDULE

1C.1 GENERAL. This section covers the schedule and scheduling requirements for performance and completion of the work included under this Contract.

1C.2 SCHEDULE. Milestone, payment and delivery schedules are defined below. The completion dates indicated are essential to the work under this Contract and to the coordination and continuity of other Owner work activities..

The listing of activities and dates is not intended to be a complete or detailed listing of all work under this Contract or of all interfaces with the work of other contractors.

It is understood and agreed that the dates shown within the Milestone and the Payment and Delivery Schedules are the latest feasible completion dates and that earlier dates may be attained as agreed to by the Purchaser and the Contractor.

Milestone	Date
Issue Request For Proposal	
Receive Bidder responses to RFP including detailed data input requirements	
Contract award	
Implementation Conference	
Owner completes designated DCS logic changes	
Hardware Delivery (if applicable)	
Establish Data Communications with DCS, DAS or historian.	
Complete optimization model training / tuning.	
On-site training.	
Preliminary acceptance of Combustion Optimization model.	
Completion of punch list items and final acceptance of the combustion optimization system.	

1C.3 PRELIMINARY SCHEDULE. The Contractor shall submit, as part of his proposal, a preliminary schedule of the work. This preliminary schedule shall include a bar chart showing all major activities. The Contractor shall also submit with his proposal a work plan, which describes the activities in sufficient detail to clearly show his understanding of the concentrated effort and coordination required to complete the work by the scheduled contract completion date.

1C.4 CONTRACTOR'S DETAILED SCHEDULE. Within 5 days after the date of contract award, the Contractor shall submit a detailed schedule. The detailed schedule shall be based upon the dates specified in the schedule included herein.

The detailed schedule shall be in bar graph form acceptable to the Purchaser.

The detailed schedule shall contain all activities of the plan, including acquisition of special equipment, materials, computer hardware, and computer software. For all equipment and materials supplied by the Contractor especially for this project, the schedule shall include the sequence of activities including issuance of purchase orders, preparation of drawing markups and delivery. Each activity shall be identified on the schedule by a descriptive title and shall be assigned an estimated number of working days required and an expected completion date.

Schedules returned to the Contractor for revision or correction shall be resubmitted for review within ____ calendar days. Upon acceptance by the Purchaser of the detailed schedule of activities, the Contractor will be responsible for maintaining such schedule.

Section 1D - OTHER REQUIREMENTS

1D.1 GENERAL. These requirements apply in general to all equipment, materials, computer hardware, and software and are supplementary to the technical requirements. If requirements specified herein are in conflict with the requirements specified in the technical requirements, the technical requirements shall govern to the extent of such conflict.

The Contractor's proposal shall be based upon the use of equipment and materials complying fully with the requirements specified in this Section. It is recognized that the Contractor may have standardized on the use of certain components, materials, processes, or procedures different than those specified herein. Alternates in addition to the base proposal on the basis of supplying the Contractor's standard components, materials, processes, or procedures will be considered. The alternate proposal shall clearly stipulate the alternate proposed, the specific exceptions to the specification, and the price change applicable for supplying such alternate.

1D.2 REFERENCED STANDARDS. Reference to the standards of any technical society, organization, or association, or to the laws, ordinances, or codes of governmental authorities shall mean the latest standard, code, or specification adopted, published, and effective at the date of taking bids unless specifically stated otherwise in this specification.

The specifications, codes, and standards referenced in this specification (including addenda, amendments, and errata) shall govern in all cases where references thereto are made except where they conflict with this specification. In case of conflict between the referenced specifications, codes, or standards and this specification, the latter shall govern to the extent of such difference.

All engineered equipment manufactured under this specification and the associated engineering for the manufacture shall be in accordance with the codes and standards detailed in the specification sections and the following codes and standards.

For engineered equipment manufactured under this specification and the associated engineering for that engineered equipment, reference in these specifications is made to only USA standards, codes, and specifications, and the equipment, materials, and workmanship furnished under these specifications shall be in accordance with the standards, code, or specification designated. Equivalent standards, codes and specifications of other authorities will be considered when submitted to the Purchaser or Owner's Representative in the English language. If the proposed substitute standards, codes, or specifications are acceptable to the Purchaser and the Owner's Representative, their use will be authorized in writing. In the event the substitute standards, codes, or specifications are not acceptable, the work shall proceed in accordance with USA standards, codes, and specifications designated in the specifications.

All materials furnished and installation procedures used under this specification shall conform with accepted good engineering practice, the codes and standards detailed in the specification sections, and the requirements of the applicable Romanian standards.

1D.2.1 List of References. All engineered equipment, engineering, materials, and installation provided under this specification shall be in accordance with the following codes and standards.

Works	**In Accordance With**
Software Development & Testing	ISO 9001 Guidelines
Performance Calculations	ASME (American Society of Mechanical Engineers) Performance Test Codes

1D.3 MATERIALS. Unless specifically provided otherwise in each case, all materials, equipment, computer hardware, and computer software furnished for permanent installation shall conform to applicable standard specifications and shall be new, unused, and undamaged.

1D.4 IDENTIFICATION. All shipping notices, computer hardware and software, and other documents pertaining to the equipment and materials furnished under this specification shall be identified as follows:

ELCEN
ADDRESS

Attention: CONTACT NAME

1D.5 SHIPMENTS. All shipments shall be F.O.B. destination, freight allowed.

The Contractor shall discuss with the Purchaser the routing of shipments and shall route the same as indicated by the Purchaser provided freight rates are no greater than by other routes. Shipments are accepted Monday through Friday from _____ a.m. to _____ p.m.

All shipments shall be delivered to:

ELCEN
PLANT ADDRESS

Attention: CONTACT NAME

The equipment shall be shipped boxed, crated, or otherwise protected against damage during shipment, handling, and storage at the Project Site. Openings shall be closed

with caps, plugs, or other suitable closure devices suitable for rough usage. Packaging shall be suitable to prevent moisture or water damage during shipment and outdoor storage at the Project Site.

The shipping forms must include the following content:

- Fiscal bill (invoice);
- Shipping notice;
- Certificate of origin;
- Factory testing certificate;
- Quality and conformity certificate;
- Guarantee certificate;
- EUR certificate;
- Transport certificate;
- Import statement value;
- Insurance policy-"for all risks"

1D.6 SHIPPING NOTICE. The Contractor shall submit to the Purchaser duplicate copies of shipping notices describing each shipment of material, equipment, computer hardware, or software. Climate control requirements shall be included. The shipping notices shall be mailed to arrive approximately ___ days ahead of the estimated shipment arrival. The addressee for each shipping notice will be CONTACT NAME.

1D.7 MATERIALS LIST. The Contractor shall prepare and submit with the first shipping notice duplicate copies of an itemized materials list covering all material, equipment, computer hardware and software furnished under this specification. The materials list shall be in sufficient detail to permit an accurate determination of the completion of shipment.

1D.8 CORRECTION OF ERRORS. Equipment and materials shall be complete in all respects within the limits herein outlined. All errors or omissions required to be corrected in the field shall be done by the Contractor or his duly authorized representative at the Contractor's expense.

1D.9 QUALITY ASSURANCE. The Contractor shall maintain a quality assurance program that provides that equipment, materials, and services under this specification whether manufactured or performed within the Contractor's plant or at any other source shall be controlled at all points necessary to assure conformance to contractual requirements. The program shall provide for the prevention and ready detection of discrepancies and for timely and positive corrective action. The Contractor shall make objective evidence of quality conformance readily available to the Purchaser. Instructions and records for quality assurance shall be controlled.

Section 2A – TECHNICAL REQUIREMENTS

2A.1 GENERAL INTENTION. It is the intention of the Owner to purchase a comprehensive Combustion Optimization System for PLANT NAME and UNIT NUMBER. The primary purpose of this system is to improve efficiency/heat rate of the unit and to reduce NOx and CO emissions. In addition to improving efficiency and reducing NOx/CO emissions, the system shall use other critical parameters (e.g., opacity, mill outlet temperatures, SH/RH temps, etc.), as required, to constrain the system to produce accurate optimization recommendations. Current plans are to install _____ (LIST NEW INSTRUMENTS IF ANY) before the installation of a Combustion Optimization System. However, in the event the installation of these instruments is delayed, the installed system shall be capable of optimizing _____ if analyzers are installed and operating prior to the conclusion of the one-year warranty period.

The system must be capable of interfacing with a _____ DCS system. The system must be capable of retrieving real-time data directly from the DCS or historical data from the _____ historian, optimizing various plant combustion performance parameters, and operating in closed-loop control. The system shall be designed with emphasis on ease of use by the plant operating personnel, shall be capable of providing detailed performance analysis to plant performance engineers, and shall be accessible from other on-site locations by Owner personnel via a local area network (LAN). The system shall be designed to operate in a power plant environment with a high degree of reliability.

The Owner intends to purchase the complete Combustion Optimization System from a single party contractor. This will ensure that the successful Contractor has complete control of meeting the installation and closed-loop operation deadlines. The plant operating personnel shall be able to access the system and control/operate the plant through modified graphics display screens on the DCS. The plant I&C and Engineering staff will implement the control logic changes and operator display screen modifications in the _____ DCS and will provide oversight and review during the implementation of the system to ensure a safe and reliable installation. The Contractors services shall include but are not limited to providing computer hardware and software, data collection, parametric testing, model development, equipment purchase and delivery, hardware and software installation, communication between their system and the _____ DCS and/or _____ historian, control logic design modifications and drawing markups, DCS screen-building design recommendations and oversight, system documentation, training, and warranty, as well as all other legal obligations that arise in connection with this contract.

The Optimization System should include resources required to optimize Steam Cycle, Sootblowing and other potential opportunities in the future. Any training, additional hardware, software or special tools needed to extend the capabilities of the proposed system should be identified. The Owner expects to have all of the tools and knowledge required to implement future extensions to the Optimization System at the unit

2A.2 UNIT DESCRIPTION. The _____ Generating Plant is located in _____, Romania and consists of _____ (specific number and fuel type)-fired units firing

fuel from _____. Unit utilize _____ and _____ to reduce _____ and _____ emissions. The unit is typically load-following for system regulation. When on load control, Systems Operations (enter location) provides the unit with a new desired load value every ___ seconds and the unit determines the rate at which it will move to the new load demand. Unit ___ has the ability to move load in a ____ MW band without general restrictions. A summary of key unit variables is included below. (FILL IN THE TABLE WITH KEY INFORMATION ABOUT THE UNIT INCLUDING PRESENCE OF OVERFIRE AIR, INFORMATION ON BURNERS AND DATA RELATED TO COMBUSTION CONTROL.)

Parameter	Value	Units
Boiler Type		
Main Steam Flow Rate		t/h
Main Steam Pressure		bar
Main Steam Temperature		^{0}C
Reheat steam Pressure		bar
Reheat Steam Temperature		^{0}C
Number of Burner Levels		
Burner Manufacturer & Model		
Number of Burners Per Level		
Number of Pulverizers		
Number of Air Heaters		
Air Heater Type		
Turbine Generator Nameplate Rating		KW
Turbine Generator Type		
Number of Feedwater Heaters		
Cooling Water Source		

2A.3 DCS DESCRIPTION.

The Contractor shall provide all the hardware and software required to establish the communication interface between the Combustion Optimization System, its peripherals, the _____ DCS, _____ historian, and _____Performance Monitoring System (THE UNIT MAY NOT HAVE A PERFORMANCE MONITORING SYSTEM.). The Contractor shall also be responsible for any software license fees and hardware that may be required to interface with the _____ DCS and the interface software shall be capable of being modified for future changes in the _____ DCS.

The Owner expects that the equipment supplied by the Contractor will include the engineering and software needed to provide optimization of the boiler. The system should be installed with the necessary resources to allow PLANT NAME staff to optimize Steam Cycle, Sootblowing, Opacity, and other potential opportunities at the site in the future. Any training, additional hardware or software or special tools needed to

extend the capabilities of the system should be identified. PLANT NAME staff expects to have all the tools and knowledge to implement future extensions to the Optimization System.

The Contractor shall be able to "close loop" the system by writing values to the Coordinated Control domain (COO) system on each unit. This may require the Contractor to work with or contract with the DCS supplier to develop an appropriate Application Program Interface (API) which will write to a _____ Control System.

The Unit ___ systems are graphically described in the Unit __Highway Overview drawings included as attachments to this specification. (ELCEN WILL NEED TO DEVELOP AND INSERT THIS DRAWING AND PROVIDE A DETAILED TEXT DESCRIPTION OF THE SYSTEM).

2A.4 GENERAL SOFTWARE REQUIREMENTS. The Combustion Optimization System unit shall be designed to operate using the Windows ___ or UNIX operating system on a _____ computer or Sun UltraSPARC II Workstation. The Combustion Optimization System shall be 32-bit capable and support multi-tasking processing. If the Combustion Optimization System is based on the Windows ___ operating system, the system shall be fully compliant with the Microsoft Windows Object Linking and Embedding (OLE) for Process Control (OPC) standard. Compliance with the Microsoft Windows Dynamic Data Exchange (DDE) standard will be acceptable as long as plans are underway to make future software upgrades OPC compliant during the warranty period.

For ease of use, the Combustion Optimization System shall also be designed to have the appearance of standard Windows applications. The graphical user interface (GUI) shall allow quick and easy navigation through the system. The GUI shall be consistent among all screen displays and tools to the maximum extent possible. Normal user interaction with the system shall be through the use of a mouse or keyboard.

The Combustion Optimization Software shall be designed to use existing plant instrumentation and be capable of retrieving real-time data directly from the _____DCS or historical data from the _____ historian. The system shall be capable of processing inputs in a sufficient manner to send optimization results back to the _____ DCS and _____ historian without any delay or disruption in DCS or unit operation.

All software must be fully compatible with the _____ DCS software tools. The input data to the Combustion Optimization System shall be checked to ensure 100 percent data validity and flagged if the value is outside expected limits.

The system user interface shall have a comprehensive suite of visual modeling tools available which are capable of off-line analysis and shall allow viewing and comparison of historical or real-time data in both a tabular and graphical manner and shall allow customization of these views/screens to suit the individual using the system (e.g., plant operators, performance engineers, plant management, etc.). The system shall also have the capability to produce printed tables, graphs, and reports as well as exporting data to Microsoft Excel, Word, and Access. The Contractor shall provide a list of the type of

graphing formats currently available (e.g., bar chart, line, XY, 3D, scatter plot, and histogram). The suite of tools shall include the ability to perform off-line "What-if" scenarios.

The Contractor shall specify the type of source code used and whether the system was developed using standard procedural programming or object-oriented programming. All software associated with the Combustion Optimization System shall be designed with sufficient modularity to minimize the time and complexity involved in making a change to any system. The Combustion Optimization Software shall be capable of integration with additional software optimization modules in the future. Implementation of additional modules at a future date shall be accomplished with no adverse affect on normal operation of the system.

The Contractor shall be responsible for maintaining all software associated with the Combustion Optimization System and ensuring that the system is operating in a reliable, error-free manner. Maintenance of the software shall be accomplished using the Contractor's own maintenance tools and documentation. If the Contractor installs any hardware and software needed to perform remote system diagnostics, troubleshooting, and upgrades; then the Contractor must make a verbal request for such approval to Owner and get approval before performing such work. If granted permission to access the Combustion Optimization System remotely, password protection shall be used to ensure that only properly authorized personnel can make changes to the system. The method of protection shall be provided through the operating system or some other type of "firewall" and shall be mutually agreeable between the Owner and the Contractor. The Combustion Optimization server shall be provided to the plant with full administrative rights. The Contractor shall also provide a means of system backup without disrupting the Optimization System or requiring a system shutdown.

Any required site license fees for the optimization software shall be included as part of the services to be provided by the Contractor under this Contract. All software updates issued by the Contractor within the first year after completion and acceptance of the Combustion Optimization System will be included in the initial purchase price and will be installed by the Contractor, either on-site or remotely, as soon as the updated software has been extensively beta tested and is available for distribution and use. Any third party software used by the Contractor as part of the Combustion Optimization System shall be included in the initial purchase price of the system and shall be covered by the warranty

2A.5 GENERAL HARDWARE REQUIREMENTS. The system for each unit shall be installed on a separate server computer provided by the _____(Purchaser or Contractor) and not on the existing _____ DCS, ___ historian, or other computer currently on-site.

The host computer for each unit shall have adequate central processing unit (CPU) speed and random access memory (RAM) to perform all real-time functions such as data retrieval, averaging, optimization, data updating, and other needed operations within the system optimization time cycle. There shall be sufficient hard drive space to store real-time and historical data. The Contractor shall also furnish a color printer that shall interface directly to the server computer. The optimization time frame for the boiler optimization system to be implemented shall be recommended by the Contractor and

approved by Engineer and Owner. The host computer shall be provided in a ____ (ENTER SIZE) rack mount assembly. CRT, mouse and keyboard will be remotely located and will require an active extender to provide the signal communications to these devices. Minimum and recommended hardware requirements will be provided by the Supplier as specified in Section BD-2 of this specification.

The expected connection between the Contractor's equipment and Unit ___'s will be an Ethernet EIA port on a Cisco 1900 Frame Switch. It is the responsibility of the Contractor to provide the appropriate interface between the EIA port and his equipment (10Base2 or 10BaseT). (MODIFY THIS EXAMPLE STATEMENT TO REFLECT ACTUAL UNIT CONIFIGURATION)

The connection to the Plant LAN business side firewall will be a second 10BaseT Network Interface Card to provide additional isolation between the process Ethernet and the business traffic.

The Contractor's server/computational platform will be mounted in an existing 0.4826 m(19 inch) rack. The computer equipment will be supplied in a standard 0.4826 m(19 inch) rack mount assembly. Distances from the rack to the Ethernet port will be ___ cable- meters. These factory fabricated interface cables will pass through cable trays and must be fabricated of "Tray Rated Cable".

The distance from the server to the work station location will be ____ cable- meters. A CRT/Keyboard/Mouse extender with a factory fabricated interface cable must be supplied to drive this distance. These cables will pass through cable trays and must be fabricated of "Tray Rated Cable".

Power will be supplied by ELCEN to all of the devices. Power will be 240 VAC from an uninterruptible power source as specified below.

2A.6 <u>INSTRUMENTATION</u>. Unless specified otherwise in other sections, all instrumentation components furnished with the equipment shall be constructed to withstand the temperatures, pressures, and corrosive conditions encountered in the actual service. Instruments rated for hazardous area classifications shall be furnished where required by applicable code or the detailed specifications.

2A.7 <u>CONTROL POWER</u>. Electrical power for control and instrumentation will be a nominal 240 volt, single-phase, 50 hertz, alternating current. The Contractor shall provide any devices required for proper operation and protection of the equipment during electrical power supply and ambient temperature fluctuations described in the following paragraphs.

2A.8 <u>TRAINING</u>. On-site training shall be provided to plant personnel who will be responsible for operating and using the Combustion Optimization System. During system startup and prior to system acceptance by the Owner, the Contractor's service representative shall hold training sessions to instruct Owner personnel on the operation and use of the system. Training and manuals are to be completed before the system is started and in open-loop advisory mode. Training sessions shall be customized to fit the needs of each user, including operators, engineers, supervisors, and plant managers.

Each class participant shall be provided with a separate training manual intended for reference and instructional purposes. A description of the training program, schedule and duration of training sessions shall also be provided in the Contractor's proposal. All training material shall be reviewed and approved by the Owner. Four levels of training shall be provided:

- Operator Training (people) -- Basic training shall be provided to plant operators. Multiple training sessions may be required to cover all shifts. The basic training shall consist of an overview of the Boiler Optimization System, a summary of what input and output data the system requires, an overview of how to monitor and operate the optimization system through the modified DCS graphics display screen, and how that information can be used to operate the plant more efficiently.

- Advanced Training (people) -- Advanced training shall be provided to technicians and engineers who will be using and maintaining the system. This training shall include all of the basic training and shall include a thorough technical explanation of the Boiler Optimization System, software installation procedures, system retraining methods, how the visual modeling tools are installed on the server computer, methods for using the visual modeling tools to diagnose plant performance problems, and procedures to configure, modify/edit, and maintain the system.

- Overview Training (people) -- Overview training shall be provided to engineers, supervisors and plant managers. The overview training shall consist of an overview of the system and how the system can be used to operate the plant more efficiently.

- Configuration Training (people) -- Configuration training shall be provided to technicians and engineers who will be expanding the system and developing additional optimization schemes. This training shall include thorough description of the processes and techniques needed to determine, create and install additional modeling and optimization processes.

The Contractor shall also include a CD-ROM disk containing all training documents so they may be merged into existing plant training manuals and procedures by the plant at PLANT NAME. The Owner also intends to videotape the training sessions held on-site to be used internally for training new employees and operators that are unable to attend the live sessions provided by the Contractor.

2A.9 <u>TECHNICAL</u> <u>SUPPORT</u>. The Contractor shall have technical support available in accordance with the following subsections.

2A.9.1 <u>Telephone</u> <u>Support</u>. The Contractor shall have technical support available during normal business hours. The Contractor shall have the ability when necessary to support the system via modem or network dial up during business hours.

2A.9.2 On-Site Support. The Contractor shall provide on-site support in accordance with the term of Section 1A.5.2 Contractor's Field Technical Services. Labor and expenses for other Owner requested on-site support will be provided in accordance with the rates specified in the Financial Proposal.

FINANCIAL PROPOSAL

ELCEN

GENERATING PLANT NAME & UNIT NUMBER

COMBUSTION OPTIMIZATION SYSTEM

RFP NO.
PROJECT

BID ISSUE
(REV 0)

building a world of difference™ | BLACK & VEATCH

FP – COST PROPOSAL

FP.1 TOTAL FIRM PRICE. Contractor shall provide a total firm price for all materials, labor and services covered by under the base proposal. All prices shall be specified in Euro.

TOTAL FIRM PRICE _____

FP.2 PRICE BREAKDOWN. Contractor shall provide a price breakdown as follows for all items included in the base and optional scope of service. All prices shall be specified in Euro.

Item	Price
Software License Fee	
Design/Documentation	
Equipment/materials/hardware	
Shipping	
On-Site Engineering/Startup Services	
Onsite Training	
Other Services (describe) a) b) c) d)	
Total Man-Days in On-Site Engineering/Startup Services	Man-Days
Total Man-Days in On-Site Training	Man-Days

FP.3 LABOR RATES. Contractor shall provide a labor rates by position applicable to the project. All rates shall be specified in Euro per man-hour. All expenses shall be at actual cost.

Position	Straight Time	Overtime	Sundays & Holidays
Project Manager			
Project Engineer			
Senior Engineer			
Staff Engineer			
IT Specialist			
Administrative Support			
Contractors Field Technical Services Personnel			
Other (As specified by Contractor)			

FP.4 EXCEPTIONS TO THE SPECIFICATION. The Contractor shall certify that he agrees to all provisions of the Specification and Bid Documents and clearly list any exceptions under the title of EXECPTIONS in the Proposal. Bidder's terms and

conditions are not considered specific exceptions. If exceptions are taken, identify the page(s) of the proposal that apply.

FP.5 SUBCONTRACTORS. This bid is based upon the use of the following subcontractors:

Trade	Subcontractor

All technical requirements and all commercial terms and requirements must be followed by all subcontractors as well as by the Contractor.

SIGNATURE OF BIDDER

Corporation Name: _____

By Authorized Person: _____

Title: _____

Business Address: _____

SPECIFICATIONS
AND
DOCUMENTS

ELCEN

GENERATING PLANT NAME & UNIT NUMBER

CONTINUOUS EMISSION MONITORING SYSTEM

RFP NO. _____
PROJECT_____

BID ISSUE
(REV 0)

building a world of difference™ | BLACK & VEATCH

TABLE OF CONTENTS

	Page
A - GENERAL INFORMATION	
A.1 INSTRUCTIONS TO BIDDERS	A-1
A.2 RIGHT TO REJECT	A-1
A.3 VALIDITY	A-1
A.4 PROJECT PROCEDURES	A-1
A.4.1 Correspondence	A-1
A.4.2 Project Team	A-1
A.4.3 Scope Change Document	A-1
A.4.4 Invoicing	A-2
A.4.5 Warranty	A-2
A.4.6 Performance Guarantee	A-2
A.4.7 Acceptance Documentation	A-3
A.4.8 Insurance	A-3
B – BID DATA	
B.1 GENERAL	B-1
B.2 DRAWINGS	B-1
B.3 SUPPLEMENTARY INFORMATION	B-1
B.4 CONTINUOUS EMISSION MONITORING SYSTEM DATA	B-3
Section 1A – SCOPE OF WORK	
1A.1 GENERAL	1A-1
1A.2 WORK INCLUDED UNDER THIS SPECIFICATION	1A-1
1A.2.1 Miscellaneous Materials and Services	1A-2
1A.3 WORK NOT INCLUDED UNDER THIS SPECIFICATION-	1A-2
1A.4 WORK INCUDED AS OPTIONS UNDER THIS SPECIFICATION-	1A-3
1A.5 CONTRACTOR'S SERVICES	1A-3
1A.5.1 Submittal of Engineering Data	1A-3
1A.5.2 Contractor's Field Technical Services	1A-3
1A.5.3 Design Conference	1A-4
1A.5.4 Recommended Spare Parts	1A-4
1A.6 LANGUAGE, NUMBERS, AND SYMBOLS	1A-4
Section 1B – DESIGN DATA AND DRAWINGS	
1B.1 GENERAL	1B-1
1B.2 CORRESPONDENCE	1B-1
1B.3 REVIEW OF ENGINEERING DATA	1B-1
1B.4 DESIGN DATA	1B-1
1B.5 DRAWINGS & OTHER CONTRACTOR PREPARED MATERIALS	1B-2

1B.5.1 Drawing Submittal 1B-2
1B.5.2 Final Markup Drawings & Materials 1B-3
1B.6 INSTRUCTION MANUALS/DOCUMENTATION 1B-3

Section 1C– SCHEDULE

1C.1 GENERAL 1C-1
1C.2 SCHEDULE 1C-1
1C.3 PRELIMINARY SCHEDULE 1C-1
1C.4 CONTRACTOR'S DETAILED SCHEDULE 1C-1

Section 1D – OTHER REQUIREMENTS

1D.1 GENERAL 1D-1
1D.2 REFERENCED STANDARDS 1D-1
1D.2.1 List of References 1D-2
1D.3 MATERIALS 1D-3
1D.4 IDENTIFICATION 1D-3
1D.5 SHIPMENTS 1D-3
1D.6 SHIPPING NOTICE 1D-4
1D.7 MATERIALS LIST 1D-4
1D.8 CORRECTION OF ERRORS 1D-4
1D.9 QUALITY ASSURANCE 1D-4

Section 2A – TECHNICAL REQUIREMENTS

2A.1 GENERAL INTENTION 2A-1
2A.2 UNIT DESCRIPTIONS 2A-1
2A.3 DCS DESCRIPTION 2A-2
2A.4 GENERAL SOFTWARE REQUIREMENTS 2A-3
2A.5 GENERAL HARDWARE REQUIREMENTS 2A-4
2A.6 INSTRUMENTATION 2A-4
2A.7 CONTROL POWER 2A-4
2A.8 TRAINING 2A-4
2A.9 TECHNICAL SUPPORT 2A-5
2A.9.1 Telephone Support 2A-5
2A.9.2 On-Site Support 2A-5

Section 2B – CONTINOUS EMISSIONS MONITORING EQUIPMENT

2B.1 GENERAL 2B-1
2B.2 CODES, STANDARDS, AND REGULATIONS 2B-1
2B.3 EMISSIONS MONITORING EQUIPMENT 2B-1
2B.3.1 General Equipment Requirements 2B-1
2B.3.2 Equipment Installation 2B-2
2B.3.3 Equipment Functions 2B-2
2B.3.4 Sample Collection and Conditioning Equipment 2B-3

2B.3.5 Volumetric Flow Rate 2B-3
2B.3.6 Gas Analyzers 2B-4
2B.3.7 Opacity Monitors 2B-4
2B.3.8 Sample Lines 2B-5
2B.3.9 Dilution Extractive Air Cleanup System 2B-6
2B.3.10 Flue Gas Analyzer Walk-In Enclosures 2B-7
2B.3.11 Calibration Gas Supply 2B-10
2B.4 SPECIFIC MONITORING REQUIREMENTS 2B-10
2B.4.1 Chimney Emissions Monitoring Equipment 2B-10
2B.4.2 Flue Gas Opacity Monitoring System 2B-11
2B.4.3 Flue Gas Wet Scrubber Sulfur Dioxide Monitoring Systems 2B-12
2B.4.4 SCR Inlet and Outlet NOx/CO2 Monitoring System 2B-13
2B.5 SYSTEM CONTROL AND DATA ACQUISTION 2B-14
2B.5.1 System Controller/Data Logger 2B-15
2B.5.2 Data Acquisition and Report Generation Computer 2B-16
2B.5.3 Data Acquisition and Reporting Software 2B-17
2B.6 CERTIFICATION AND FIELD TESTING 2B-29
2B.7 SYSTEM GUARANTEES 2B-30
2B.8 FACTORY DEMONSTRATION 2B-31
2B.9 PLANT SITE PERSONNEL TRAINING 2B-31
2B.10 TECHNICAL SERVICES 2B-31
2B.11 OPTIONAL MAINTENANCE CONTRACT 2B-32

Section 3A – INSTALLATION AND CONSTRUCTION

3A.1 TRANSMITTER MECHANICAL INSTALLATION 3A-1
3A.1.1 Piping and Tubing Installation 3A-1
3A.1.2 Racks Installation, Mounting, and Connection 3A-1
3A.1.3 Testing. 3A-2
3A.2 TRANSMITTER ELECTRICAL INSTALLATION 3A-3
3A.2.1 Raceway System Installation. 3A-3
A.2.1.1 Raceway General. 3A-3
3A.2.1.2 Cable Tray 3A-3
3A.2.1.3 Conduit 3A-4
3A.2.2 Cable Installation and Termination 3A-5
3A.2.2.1 Cable Installation 3A-5
3A.2.2.2 Termination. 3A-6
3A.2.2.3 Testing. 3A-6
3A.2.2.3.1 Continuity and Identification Testing 3A-7
3A.2.2.3.2 Insulation Testing 3A-7
3A.3 INSULATION, FREEZE PROTECTION, AND PROCESS HEAT TRACING INSTALLATION 3A-7
3A.3.1 Insulation and Jacketing Installation 3A-7
3A.3.1.1 Insulation 3A-8
3A.3.1.2 Insulation Jacketing 3A-8

3A.3.2 Freeze Protection and Process Heat Tracing Installation. 3A-9

3A.3.2.1 Freeze Protection and Process Heat Tracing Equipment 3A-9
3A.3.2.2 Freeze Protection and Process Heat Tracing Electrical 3A-10
3A.3.2.3 Freeze Protection and Process Heat Tracing Testing 3A-10
3A.4 AS-BUILT DRAWINGS 3A-10

A - GENERAL INFORMATION

A.1 INSTRUCTIONS TO BIDDERS. The Contractor shall provide a complete proposal detailing but not necessarily limited to a description of the services, exceptions and/or clarifications to the proposal, fees, rate structures, and terms and conditions which will govern the project. The Contractor will provide a description of the work package. THE PROPOSAL SHALL INCLUDE THE ESTIMATED MAN-HOURS AND ASSOCIATED COSTS FOR THE PROJECT; THE COSTS SHALL BE CONSIDERED AS FIRM PRICE, WITH NO INCREASES BEING ALLOWED EXCEPT FOR AUTHORIZED CHANGED IN THE SCOPE OF WORK.

A.2 RIGHT TO REJECT. The right is reserved by ELCEN to reject any or all proposals. In addition, ELCEN may elect to cancel the project if it is determined necessary by ELCEN or if funding is not available.

A.3 VALIDITY. Bidder's proposal shall remain valid for a period of _____ (__) days commencing on the proposal date.

A.4 PROJECT PROCEDURES. The following items and services shall be furnished as optional work under this specification:

A.4.1 Correspondence. All correspondence and documents from the Contractor to ELCEN during the proposal process shall be addressed to:

Type name and address of ELCEN contacts here.

After award, a formal distribution list for letters, transmittals, etc. will be created.

A.4.2 Project Team. The Contractor shall have a dedicated Project Manager responsible for the coordination of all project related activities. The Project Manager identified for this project by the Contractor shall remain in that position throughout the project. Any changes in this key position shall be with the approval of ELCEN.

The Contractor shall include resumes of personnel who would be assigned to the project, project team organization, job descriptions, project experience, and other information that is considered pertinent.

ELCEN reserves the right to request personnel changes if performance/experience becomes an issue.

A.4.3 Scope Change Document . For any modified scope changes or additions to the Contractor work, the Contractor will provide written notification per the contract procedure. ELCEN reserves the right to have any extra work performed on a firm price, not-to-exceed or cost-plus basis. The Contractor will submit with his proposal a complete rate structure applicable to any work to be performed under this agreement.

The Scope Change Document shall describe the reason for change, the person who requested the change, the original scope and man-hour cost, and the new scope and man-hour cost.

Each Scope Change Document shall be consecutively numbered. Any effects on the engineering schedule and overall project schedule shall be described. **WRITTEN APPROVAL FROM ELCEN IS REQUIRED BEFORE PROCEEDING WITH THE SCOPE CHANGE.**

A.4.4 Invoicing. The Contractor's proposal is to include a description of their invoicing procedures. ELCEN will issue a purchase order to the selected Contractor. Invoices not complete in reference or lacking in backup information will be rejected.

Progress and/or milestone based payments will be made in an amount equal to _____ ( ) percent of Work completed with the balance being retainage.

Final payment will be made upon completion and acceptance of the work. Retainage will be paid after all submittals have been received and accepted following final payment.

A.4.5 Warranty. The Contractor shall provide a warranty on all the hardware, software and services rendered to ensure that the Continuous Emission Monitoring System meets the following requirements:

Be free from defects in design, material, workmanship and title;

Be of the kind, quality and capability designated or described in the Contract;

Perform in the manner set forth in or required by the Contract; and

Have been produced processed, delivered and sold or licensed in conformity with all applicable federal, state and local laws, administrative regulations and orders. The Contractor shall execute, certify and deliver to ELCEN any documents as may be required to effect or evidence compliance with such federal, state and local laws.

Except for consumable items, the warranty period shall be _____.

During the warranty period, the Contractor shall provide free of charge telephone support for ELCEN users and remote support for Software imperfections.

A.4.6 Performance Guarantee. The performance guarantee shall be in the form of a bank letter of credit for 10% of the contract value, valid until receipt and approval of the Acceptance Documentation; or by retention of 10% of the amount of each invoice, retention to be paid upon receipt and approval of the Acceptance Documentation. If in the form of a bank letter of credit, the performance guarantee should be issued by a bank in Romania, or by a bank abroad with a correspondent in Romania.

A.4.7 Acceptance Documentation. The Contractors shall provide to the Purchaser the Acceptance Documentation (at the end of executions works, at the end of commissioning, at the end of the guarantee period) in accordance with the Romanian legislation in force.

A.4.8 Insurance. The Contractor shall provide full insurance of all software, hardware, etc, against losses or damages during execution, transportation, storage, testing, and commissioning.

B - BID DATA

B.1 GENERAL. Each Bidder shall submit complete and definitive information on his proposal offering in sufficient detail to permit a complete technical analysis of the Proposal.

The requirements for information contained in this Section are basic. Additional information shall be provided as requested by the Purchaser.

The scope of supplementary information and equipment data requested herein shall be included in the Proposal to the fullest extent possible at the time of bid submittal. As a minimum, sufficient proposal data shall be submitted to demonstrate compliance with this specification, and to allow a comprehensive evaluation of the bid. Proposals lacking sufficient data to satisfy these requirements will be considered non-responsive. The successful Bidder shall complete all data submittal requests and Proposal data entries for inclusion in the Purchase Order documents prior to the Award of Contract.

B.2 DRAWINGS. Drawings shall be submitted with the proposal indicating the following information for all equipment furnished under these specifications.

Overall system block diagram.

Sampling probe and/or monitor installation requirements.

Sampling tubing installation requirements.

General system interconnection diagram indicating requirements for wiring, tubing, piping, and conduit, including complete wiring specifications (e.g., two twisted shielded pairs with common ground).

Cabinet and junction box sizes and layout.

Overall power distribution diagram indicating all loads, voltages, and amperage.

CEM analyzer enclosure sizes and preliminary equipment layout.

B.3 SUPPLEMENTARY INFORMATION. The following supplementary information shall be submitted with the proposal as provided for in the Instructions to Bidders.

Description of analytical procedures.

Description of data processing hardware, including details of redundancy or backup equipment for protection against data loss upon equipment failure, programming methods, and program equipment.

Description of any sampling requirements, including distance limitations and response times.

Description of any requirements for water, heat tracing, compressed air, drainage, electrical power (amps at voltage), power surge protection, or venting.

Description of compliance testing procedures, both shop and field.

Description of yearly maintenance contract, including the frequency of scheduled maintenance visits.

Description of average annual maintenance costs and routine maintenance requirements.

Description of software, including all menu driven functions available to the operator.

Description of all software variables which can be changed by the operator and not require changes to the source code.

Description of all equipment furnished, including analyzers, controllers, computers, etc. Information to include manufacturer, model, operating voltage, signal in, signal out, maximum signal output impedance, and physical description, including weight, power consumption, calibration gas consumption rate.

Description of all ancillary equipment and complete supplies required for the installation, proper operation, and routine maintenance of the emissions monitoring system equipment.

Complete dimensional information covering measurement devices, rack mounted transducers, readout devices, and subpanel sizes.

Description of mounting requirements for all duct and stack mounted equipment.

Description of sample conditioning system including details of particulate removal, water removal (if applicable), trace carbon monoxide removal (applicable for dilution systems).

Description of sample tubing type, materials, method of heating.

Equipment mounting flange requirements different than indicated in this specification.

Description of any special shipping methods for flue gas analyzer enclosure.

Description of availability and pricing of factory training on system operation, understanding, and trouble-shooting.

List of recommended spare parts.

List of special tools.

List of all major subcontractors to be used on the project, including descriptions of the subcontractors.

List of all system outputs for the Purchaser's plant data management system. Describe calibration gas cylinder size to be provided.

Equipment availability data.

Complete system and cost information for any alternative system proposals.

Describe the scope of reports, calculations, etc., which will be provided as part of the data acquisition software package to meet the regulatory requirements referenced.

The proposal shall indicate the calculations, if any, which will not be performed by the data processor and which must be presented to the Romanian Environmental Protection Agency as part of the compliance reporting. The Contractor shall provide sample output reports meeting EU requirements, the requirements of the Romanian legislative regulations for environmental protection and the requirements of the Conditions of Certification and PSD permit.

Drawing of proposed DAS cabinet.

Description of controller/logger programming equipment.

Description of DAS programming equipment.

Drawings showing access requirements around each stack-mounted in situ monitor.

Drawings showing type of sample line tubing tray recommended and method of installation.

Terminal block manufacturer.

Description of lighting surge protection equipment/features.

List of all devices associated with the chimney and opacity monitoring systems that are not redundant.

Description of missing data provisions as required by EU Directive No.2001/80/EC and 40 CFR Part 75.

B.4 <u>CONTINUOUS EMISSION MONITORING SYSTEM DATA</u>. Submit Data required on the following pages. Where options are indicated in the PROPOSAL FORM or BID DATA, provide complete information for each option.

Entries on the BID DATA forms shall be entered electronically in the MS Word file contained on the CD-ROM or diskette included with this specification. A hardcopy of the BID DATA will be included with each proposal. Electronic copies of the BID

DATA file will be provided to ELCEN and _____ along with the required numbers of proposals.

Electronic copies of the files may be submitted by CD-ROMs or 3.5 inch diskette. Electronic copies submitted with the proposal will be virus checked and will be certified to be virus free.

REQUIREMENT DESCRIPTION	CONTRACTOR RESPONSE
GENERAL	
Describe your implementation strategy in detail	
Describe in detail the assistance you will need from the Purchaser's staff in the installation and implementation of the software package. What are the tasks the plant staff must perform in the data gathering, parametric testing, system development and initial installation of the system? Include an estimate of hours per week involvement by plant staff.	
Detail the terms under which source code will be made available for exclusive purpose of self-maintaining the optimization system software.	
How much on-site support time will you provide during system installation and tuning in preparation for on-line operation? Describe and identify the make-up of the optimal project team including individual skill sets.	
Describe your on-going support (e.g., Help Desk, hot line, newsletters, user groups, internet, e-mail, etc.). Describe your procedure for problem resolution. What are the lead time requirements and criteria for on-site technical support?	
Would you use third party contractors or subcontractor for any of the services required under the specification? If so, for what parts of the project?	
What is the nature of outside help needed by plant staff to maintain the existing software?	
What is the nature of outside help needed by plant staff to update the existing software? (i.e., new version release)	
Is there a User's Group. If yes, please indicate the number of members.	
Number of current software users.	
Describe the overall system architecture including system size, redundancies, I/O quantity (if applicable), interfaces with other systems, UPS requirements / type (if applicable), backup requirements, list of equipment, etc.	
CHIMNEY EMISSION MONITORING EQUIPEMENT	
What type of continuous emission monitoring system is proposed?	

REQUIREMENT DESCRIPTION	CONTRACTOR RESPONSE
What is the sampling frequency and duration for the following? • SO2 • NOx • CO2 • Flow • Opacity	
What is the number and size of stack penetrations required for each item? • Sample probe • Flow monitor • Opacity monitor • Other (explain)	
What type of equipment cabinets are included in the base proposal? • NEMA type • Number • Width, m • Depth, m • Height, m • Weight, kg	
What are the system heat dissipation requirements in kW?	
What are the system power requirements? • Watts • Voltage • Phase	
Describe the sample probes and lines. • Probe manufacturer • Model type • Probe material exposed to the flue gas • Probe material not exposed to the flue gas • Critical orifice material • Standard length • Is the probe length adjustable in the field? (Yes or No) • Method of probe adjustment • Range of length adjustment for probe (minimum/maximum)	

REQUIREMENT DESCRIPTION	CONTRACTOR RESPONSE

• Probe diameter
• Type of probe mounting attachment
• Dilution system
  ○ Dew point of system
  ○ Dilution ratio
  ○ Critical orifice flow (ml/minute)	

Describe the opacity monitoring system.
• Manufacturer
• Model number
• Analytical technique
• Equipment enclosures
  ○ Rating
  ○ Width, m
  ○ Depth, m
  ○ Height, m
  ○ Weight, kg
• Power consumption (watt / voltage / phase)
• Calibration frequency
• Purge air blowers
  ○ Manufacturer
  ○ Number
  ○ Voltage
  ○ Amps (normal / starting)
  ○ Size, W
  ○ Weight, kg
  ○ Capacity (m^3/h at kPA.)
  ○ Maximum pressure (kPa.)	

Describe the SO2 analyzers.
• Manufacturer
• Model number
• Analytical technique
• Equipment enclosures
  ○ Rating
  ○ Width, m
  ○ Depth, m
  ○ Height, m
  ○ Weight, kg	

REQUIREMENT DESCRIPTION	CONTRACTOR RESPONSE

• Power consumption (watt / voltage / phase)
• Calibration frequency
• Two point calibration capability (Yes or No)
• Three point calibration capability (Yes or No)
• Calibration gas consumption, standard m^3/h and m^3/day per analyzer
• Calibration bottle life, days
• Exhaust blower
  o Number
  o Voltage
  o Size, W
  o Weight, kg
  o Capacity (m^3/h at kPa)
  o Maximum pressure (kPa)	

Describe the CO2 analyzers.
• Manufacturer
• Model number
• Analytical technique
• Equipment enclosures
  o Rating
  o Width, m
  o Depth, m
  o Height, m
  o Weight, kg
• Power consumption (watt / voltage / phase)
• Calibration frequency
• Two point calibration capability (Yes or No)
• Three point calibration capability (Yes or No)
• Calibration gas consumption, standard,m^3/h and m^3/day per analyzer
• Calibration bottle life, days
• Exhaust blower
  o Number
  o Voltage
  o Size, W
  o Weight, kg
  o Capacity (m^3/h at kPa.)
  o Maximum pressure (kPa.)	

REQUIREMENT DESCRIPTION	CONTRACTOR RESPONSE

Describe the NOx analyzers.
• Manufacturer
• Model number
• Analytical technique
• Equipment enclosures
  o Rating
  o Width, m
  o Depth, m
  o Height, m
  o Weight, kg
• Power consumption (watt / voltage / phase)
• Calibration frequency
• Two point calibration capability (Yes or No)
• Three point calibration capability (Yes or No)
• Calibration gas consumption, standard m^3/h and m^3/day per analyzer
• Calibration bottle life, days
• Exhaust blower
  o Number
  o Voltage
  o Size, W
  o Weight, kg
  o Capacity (m^3/h at kPa.)
  o Maximum pressure (kPa.)	

Describe flow monitors.
• Pitot tube
• Manufacturer
• Model type
• Probe material
• Number of monitoring locations
• Minimum number of points required
• Maximum number of points required
• Probe length
• Equipment cabinet
  o Width, m
  o Depth, m
  o Height, m
  o Weight, kg	

REQUIREMENT DESCRIPTION	CONTRACTOR RESPONSE
• Power consumption (watt / voltage / phase) • Calibration frequency • Plant air consumption, standard m^3/h and m^3/day • Plant air consumption intermittent maximum (standard m^3/h)	

Describe the annubar.
• Manufacturer
• Model type
• Probe material
• Number of annubars
• Annubar length
• Equipment cabinet
  o Width, m
  o Depth, m
  o Height, m
  o Weight, kg
• Power consumption (watt / voltage / phase)
• Calibration frequency	

Describe the Calibration Gas Cylinders. (Height x Diameter) • Gas 1 _____ • Gas 2 _____ • Gas 3 _____ • Gas 4 _____	
Describe the Walk-In Enclosure? • Smoke detector • Smoke detector output signal description • Enclosure skin material • Wall / roof / floor R-value • Door R-value • Width, m • Depth, m • Height, m • Door size, width x height, m • Weight including all internally mounted analyzers and associated equipment. • Total power consumption (watt / voltage / phase) • HVAC unit manufacturer	

REQUIREMENT DESCRIPTION	CONTRACTOR RESPONSE
o Model number o Nominal cooling size per HVAC unit (kJ/min) o Heating capacity (kW) • Processor o Manufacturer o Model number o Type o Quantity o Memory • Data logger o Manufacturer o Model number o Type o Quantity o Memory • Power supplies o Manufacturer o Model number o Type o Quantity	
Describe the CEM DAS. • Processor/CPU o Manufacturer o Model number o Type o Quantity o Memory • Hard disk drives / Optical disk drives o Type o Manufacturer o Quantity o Capacity • Floppy disk drives o Type o Manufacturer o Quantity o Capacity	

REQUIREMENT DESCRIPTION	CONTRACTOR RESPONSE

• CD Rom / DVD drives
  o Type
  o Manufacturer
  o Quantity
  o Capacity
• Software
  o Vendor
  o Operating System
• Monitor
  o Manufacturer
  o Type
  o Size
  o Resolution (pixels)
• Printer
  o Manufacturer
  o Model
  o Speed
• Power supplies
  o Manufacturer
  o Quantity
  o Type
• Cabinet
  o Size
  o Weight, kg
  o Load, kW
  o Color	

SCRUBBER SO2 MONITORING EQUIPMENT (IF APPLICABLE)	
What type of continuous emission monitoring system is proposed?	
What is the sampling frequency and duration for the following? • SO2 • CO2	
What is the number and size of duct penetrations required for each item?	

REQUIREMENT DESCRIPTION	CONTRACTOR RESPONSE
• Sample probe • Flow monitor • Opacity monitor • Other (explain)	
What type of equipment cabinets are included in the base proposal? • NEMA type • Number • Width, m • Depth, m • Height, m • Weight, kg	
What are the system heat dissipation requirements in kW?	
What are the system power requirements? • Watts • Voltage • Phase	

Describe the sample probes and lines.
• Probe manufacturer
• Model type
• Probe material exposed to the flue gas
• Probe material not exposed to the flue gas
• Critical orifice material
• Standard length
• Is the probe length adjustable in the field? (Yes or No)
• Method of probe adjustment
• Range of length adjustment for probe (minimum/maximum)
• Probe diameter
• Type of probe mounting attachment
• Dilution system
  o Dew point of system
  o Dilution ratio
  o Critical orifice flow (ml/minute)	

Describe the SO2 analyzers. • Manufacturer	

REQUIREMENT DESCRIPTION	CONTRACTOR RESPONSE

• Model number
• Analytical technique
• Equipment enclosures
  o Rating
  o Width, m
  o Depth, m
  o Height, m
  o Weight, kg
• Power consumption (watt / voltage / phase)
• Calibration frequency
• Two point calibration capability (Yes or No)
• Three point calibration capability (Yes or No)
• Calibration gas consumption, standard m^3/h and m^3/day
• Calibration bottle life, days
• Exhaust blower
  o Number
  o Voltage
  o Size, W
  o Weight, kg
  o Capacity (m^3/h at kPa)
  o Maximum pressure (kPa.)	

Describe the CO2 analyzers.
• Manufacturer
• Model number
• Analytical technique
• Equipment enclosures
  o Rating
  o Width, m
  o Depth, m
  o Height, m
  o Weight, kg
• Power consumption (watt / voltage / phase)
• Calibration frequency
• Two point calibration capability (Yes or No)
• Three point calibration capability (Yes or No)
• Calibration gas consumption, standard m^3/h and m^3/day
• Calibration bottle life, days	

REQUIREMENT DESCRIPTION	CONTRACTOR RESPONSE

• Exhaust blower
  o Number
  o Voltage
  o Size, W
  o Weight, kg
  o Capacity (m^3/h at kPa.)
  o Maximum pressure (kPa.)	

Describe the Calibration Gas Cylinders. (Height x Diameter) • Gas 1 _____ • Gas 2 _____ • Gas 3 _____ • Gas 4 _____	

Describe the Walk-In Enclosure?
• Smoke detector
• Smoke detector output signal description
• Enclosure skin material
• Wall / roof / floor R-value
• Door R-value
• Width, m
• Depth, m
• Height, m
• Door size, width x height, m
• Weight including all internally mounted analyzers and associated equipment.
• Total power consumption (watt / voltage / phase)
• HVAC unit manufacturer
  o Model number
  o Nominal cooling size per HVAC unit (kJ/min)
  o Heating capacity (kW)
• Processor
  o Manufacturer
  o Model number
  o Type
  o Quantity
  o Memory
• Data logger	

REQUIREMENT DESCRIPTION	CONTRACTOR RESPONSE
○ Manufacturer ○ Model number ○ Type ○ Quantity ○ Memory • Power supplies ○ Manufacturer ○ Model number ○ Type ○ Quantity	
SCR NOx MONITORING EQUIPMENT	
What is the sampling frequency and duration for the following? • NOx • CO2	
What is the number and size of duct penetrations required for each item? • Sample probe	
What type of equipment cabinets are included in the base proposal? • NEMA type • Number • Width, m • Depth, m • Height, m • Weight, kg	
What are the system heat dissipation requirements in kW?	
What are the system power requirements? • Watts • Voltage • Phase	
Describe the sample probes and lines. • Probe manufacturer • Model type • Probe material exposed to the flue gas	

REQUIREMENT DESCRIPTION	CONTRACTOR RESPONSE

• Probe material not exposed to the flue gas
• Critical orifice material
• Standard length
• Is the probe length adjustable in the field? (Yes or No)
• Method of probe adjustment
• Range of length adjustment for probe (minimum/maximum)
• Probe diameter
• Type of probe mounting attachment
• Dilution system
  o Dew point of system
  o Dilution ratio
  o Critical orifice flow (ml/minute)	

Describe the CO2 analyzers.
• Manufacturer
• Model number
• Analytical technique
• Equipment enclosures
  o Rating
  o Width, m
  o Depth, m
  o Height, m
  o Weight, kg
• Power consumption (watt / voltage / phase)
• Calibration frequency
• Two point calibration capability (Yes or No)
• Three point calibration capability (Yes or No)
• Calibration gas consumption, standard m^3/h and m^3/day
• Calibration bottle life, days
• Exhaust blower
  o Number
  o Voltage
  o Size, W
  o Weight, kg
  o Capacity (m^3/h at kPa.)
  o Maximum pressure (kPa.)	

REQUIREMENT DESCRIPTION	CONTRACTOR RESPONSE

Describe the NOx analyzers.
• Manufacturer
• Model number
• Analytical technique
• Equipment enclosures
  o Rating
  o Width, m
  o Depth, m
  o Height, m
  o Weight, kg
• Power consumption (watt / voltage / phase)
• Calibration frequency
• Two point calibration capability (Yes or No)
• Three point calibration capability (Yes or No)
• Calibration gas consumption, standard m^3/h and m^3/day
• Calibration bottle life, days
• Exhaust blower
  o Number
  o Voltage
  o Size, W
  o Weight, kg
  o Capacity (m^3/h at kPa)
  o Maximum pressure (kPa.)	

Describe the Walk-In Enclosure? • Smoke detector • Smoke detector output signal description • Enclosure skin material • Wall / roof / floor R-value • Door R-value • Width, m • Depth, m • Height, m • Door size, width x height, m • Weight including all internally mounted analyzers and associated equipment. • Total power consumption (watt / voltage / phase)	

REQUIREMENT DESCRIPTION	CONTRACTOR RESPONSE

• HVAC unit manufacturer
  o Model number
  o Nominal cooling size per HVAC unit (kJ/min)
  o Heating capacity (kW)
• Processor
  o Manufacturer
  o Model number
  o Type
  o Quantity
  o Memory
• Data logger
  o Manufacturer
  o Model number
  o Type
  o Quantity
  o Memory
• Power supplies
  o Manufacturer
  o Model number
  o Type
  o Quantity	

PULVERIZER CO MONITORING EQUIPMENT (IF APPLICABLE)	

Describe the Pulverizer CO analyzers.
• Manufacturer
• Type
• Equipment cabinet
  o Location (local or remote)
  o Width, m
  o Depth, m
  o Height, m
  o Weight, kg
• Power consumption, watts
• Calibration gas consumption, standard m^3/h and m^3/day
• Plant air consumption
  o Continuous, standard m3/h
  o Intermittent maximum, standard m3/h	

Section 1A - SCOPE OF WORK

1A.1 GENERAL. This section covers the general description, scope of work, and supplementary requirements for the work included under this specification.

It is ELCEN's intention to implement a Continuous Emissions Monitoring System to measure specific gaseous and particulate pollutants exiting the plant through the flue gas stream. Emissions will be monitored and reported on a unit-by-unit basis and include sulfur dioxide (SO2), nitrogen oxides (NOx), carbon dioxide (CO2), particulate matter (PM), and opacity.

The work included under this specification shall be supplied FOB PLANT NAME, PLANT LOCATION.

1A.2 WORK INCLUDED UNDER THIS SPECIFICATION. The work performed by the Contractor shall be to furnish Continuous Emission Monitoring Systems at PLANT NAME Unit(s) ___. The work under this specification shall include furnishing all flue gas monitoring equipment, materials, computer hardware and software, and supplying all services necessary to perform the work in accordance with the specifications, drawings, and other contract documents, except as specifically excluded under WORK NOT INCLUDED UNDER THIS SPECIFICATION. Items or services to be quoted as options to the base bid are listed under WORK INCLUDED AS OPTIONS UNDER THIS SPECIFICATION.

All equipment, material, computer hardware, software, and interfaces shall be furnished by Contractor as specified by Purchaser in this specification.

The equipment will be tested by the Purchaser after erection to demonstrate its ability to operate under the conditions and fulfill the guarantees as set forth herein. If the tests indicate that the equipment fails to meet guaranteed performance, the Contractor shall make additional tests and modifications to meet performance guarantees.

All work required for a complete Continuous Emission Monitoring System shall be furnished, except as specified otherwise in this specification. The equipment, materials, computer hardware, software, and interfaces to be furnished shall include, but not necessarily be limited to, the following major items:

All probes, analyzers, controllers, flow monitors, computers, equipment cabinets, tubing, and wiring required for a complete flue gas monitoring system

Flow monitor

Opacity monitor

Equipment

Startup the Continuous Emission Monitoring System

Provide on-site training to all plant personnel who will be responsible for operating, maintaining, and using the Continuous Emission Monitoring System and tools.

Provide site acceptance test results to plant staff to demonstrate and validate full-system functionality and operation of the Continuous Emission Monitoring System.

Provide documentation for the Continuous Emission Monitoring System which should consist of all information required for Operators, Performance Engineers and System Administrators.

1A.2.1 Miscellaneous Materials and Services. Miscellaneous materials and services not otherwise specifically called for shall be furnished by the Contractor in accordance with the following:

All supporting hardware, third-party software, cables, connectors, and interfaces required to implement the Continuous Emission Monitoring System

All nuts, bolts, gaskets, special fasteners, backing rings if allowed, etc., between components and equipment furnished under these specifications

All piping integral to or between any equipment furnished under these specifications, except as otherwise specified

All necessary connections for the Purchaser's piping and instruments

All necessary instrument, power and control wiring and raceways integral to any equipment furnished under these specifications. This shall include terminal blocks and internal wiring to these terminal blocks for equipment requiring external connection.

Detailed storage requirements

All special tools, spreader bars, lifting beams, or lifting lugs for offloading.

The use of all special tools required for erection of the equipment, exclusive of the maintenance tools specified to be furnished under Section 1B. Erection tools shall remain the property of the Contractor and all shipping costs to and from the jobsite shall be at the Contractor's expense.

1A.3 WORK NOT INCLUDED UNDER THIS SPECIFICATION. The following items of work will be furnished by the Purchaser (unless furnished as part of optional work under WORK INCLUDED AS OPTIONS UNDER THIS SPECIFICATION):

Construction and miscellaneous services and materials specified as furnished by the Purchaser.

Supply and installation of electrical power and control wiring, conduit, junction boxes, network hubs, and other electrical enclosures not integral to equipment supplied by the Contractor.

Personnel to conduct parametric testing of software based on Contractor's test plan.

Operating personnel for system startup and operation.

1A.4 WORK INCLUDED AS OPTIONS UNDER THIS SPECIFICATION. The following items and services shall be furnished as optional work under this specification:

Scrubber SO2 monitoring equipment.

Selective Catalytic Reduction (SCR) NOx monitoring equipment.

Pulverizer CO monitoring equipment.

1A.5 CONTRACTOR'S SERVICES. The services called for in WORK INCLUDED UNDER THIS SPECIFICATION and the services inherent to any options purchased by the Purchaser as called for in WORK INCLUDED AS OPTIONS UNDER THIS SPECIFICATION shall be in accordance with the following.

1A.5.1 Submittal of Engineering Data. Drawings and other engineering data for the specified equipment and materials are essential to the design and implementation of the entire project. The Contractor shall submit drawings and engineering data in accordance with the schedule and requirements specified herein to assure compliance with the overall installation and operating schedule.

Two weeks after receipt by Purchaser for review of drawings and engineering data shall be included in the Contractor's design, procurement, and delivery schedule.

1A.5.2 Contractor's Field Technical Services. The Contractor shall furnish the services of one or more technical service representatives when requested by the Purchaser. The service representatives shall be technically competent and experienced in the installation and operation of the system, and authorized by the Contractor to perform the work stipulated. The Contractor's technical representative shall be responsible for all on-site work.

As part of the base scope of the work, the Contractor's technical service representatives shall provide periodic assistance and direction to the Purchaser and shall inspect the computer hardware and software after installation and make any needed changes or adjustments to assure proper operation. They shall furnish written certification to the Purchaser that the system has been inspected and adjusted by them or under their direction and that it is ready for service, all of which shall be done before initial operation of the system.

The service representatives shall also be present during data collection, parametric testing, installation of hardware and software, testing of system communication with the DAS or historian, operator graphics display screen modifications, initial operation of the system, and

acceptance testing. The technical service representative shall instruct the plant personnel in the proper operation of the system.

1A.5.3 Design Conference. The Contractor's technical service representative shall attend a design conference at a time and place selected by the Purchaser to discuss matters relative to the execution of this Contract. The Contractor's technical service representative shall attend additional design conferences as required by the Purchaser thereafter to expedite the work.

1A.5.4 Recommended Spare Parts. The Contractor shall provide a complete listing of recommended spare parts with unit prices f.o.b. LOCATION, not later than the date listed in the Schedule of Activities. The listing shall include the manufacturer of each part, a description of each part (including industry standard part number if available), the assembly or equipment in which each part will be used, and recommended quantities to be stocked; shall classify the relative criticality of parts based on the manufacturer's experience; and shall list the lead time required for manufacture and delivery of each part.

The Purchaser will retain the option of purchasing any one or any combination of spare parts listed at the prices quoted until 6 months after the date of commercial operation.

1A.6 LANGUAGE, NUMBERS AND SYMBOLS. All the documents of the offer and before signing the contract shall be in English. After signing the contract, all drawings, designs, specifications, manuals, operating instructions, statements, schedules, notices, documents, nameplates, and markings shall be in both the English and Romanian languages. All graphics developed by the Contractor shall be in the Romanian language. Windows operating system graphics may be supplied in English if a Romanian version is not available.

All units of measurement shall be stated in the SI - system. The Contractor shall further be required to employ in all drawings and submittals the same symbols and designations as are used by the Purchaser.

Section 1B – DESIGN DATA AND DRAWINGS

1B.1 GENERAL. This section stipulates the requirements for engineering data and drawings which the Contractor shall submit for design information and review.

1B.2 CORRESPONDENCE. Correspondence on all technical matters shall be addressed to the Engineer as follows:

Name
Address

Attention: CONTACT NAME

Correspondence on all procedural and commercial matters shall be addressed to the Purchaser's Representative as follows:

ELCEN
UTILITY ADDRESS

Attention: ELCEN CONTACT NAME

Letters of transmittal shall accompany submittals of drawings and engineering data and shall include a list of the data included in the transmittal. Correspondence shall be identified with the project name, plant name and B&V project number. Transmittal of drawings and data shall be as specified in the article entitled DRAWINGS.

1B.3 REVIEW OF ENGINEERING DATA. The Purchaser's review of engineering data will cover only general conformity of the data to the specifications and documents, external connections and interfaces with existing equipment. This review does not indicate a thorough review of all dimensions, quantities, and details of the equipment, material, device, or item indicated or the accuracy of the information submitted. This review shall not be construed as relieving the Contractor from any responsibility for errors or deviations from the requirements of the contract documents.

1B.4 DESIGN DATA. The following design data shall be submitted as scheduled in Section 1C, unless otherwise specified:

A summary of the historical data retrieved from the plant's DCS to be used for baseline model development and analyzed by the Contractor shall be reviewed by plant staff to determine if the data collected is representative of the full operating range of the unit.

A test plan to determine if additional performance testing is required to effectively characterize the relationships between the operating input variables and optimized output variables (i.e., efficiency/specific consumption (heat rate), NOx emissions, and CO).

A schematic diagram indicating the type of system connection to the plant DCS, _____ historian, and Performance Monitoring System.

Itemized list of control logic, setpoint, bias, constraint, and permissive changes to the plant DCS as a result of the Continuous Emission Monitoring System. The itemized list must be presented in sufficient detail for the plant personnel to determine the particular DCS graphic displays which will require modification.

Submittal and processing shall be as specified for drawings.

1B.5 DRAWINGS AND OTHER CONTRACTOR PREPARED MATERIALS. All Contractor-prepared drawings are to be markups of original plant and control logic drawings. Markups shall be in sufficient detail to indicate the arrangement, description and operation of component materials and devices; the external connections, and correlation with other equipment; and the information specifically requested in the drawing submittal schedule specified in Section 1C.

Drawings to be submitted include all "Certified" drawings by the Contractor, subcontractors, manufacturers, etc., unless specifically excluded by the Purchaser. "Certified" drawings shall mean drawings fully completed and certified by the Contractor as to the compliance of the information contained thereon with the requirements of these specifications. Certified drawings shall be clearly stamped "Certified" or shall have title block entries clearly indicating the drawing is certified. Certified drawings will be reviewed by the Purchaser and processed as specified in this section.

1B.5.1 Drawing Submittal. _____ (__) prints of each markup drawing and/or other materials shall be submitted to the Purchaser as follows:

_____ copies to:

ELCEN
Utility Address

Attention: Contact Name

Markups reviewed by the Purchaser will be returned to the Contractor with corrections or exceptions clearly marked. The Contractor shall make the changes noted thereon and copies of the corrected drawings shall be submitted for review in the same manner as the original submittal.

When the drawings are returned to Contractor with no corrections or exceptions noted the Contractor shall submit drawings for final distribution as specified hereinafter under Final Markup Drawings.

No work shall be performed in connection with the installation of equipment, materials, computer hardware and software until the drawings and data have been reviewed by the Purchaser except at the Contractor's own risk and responsibility. Work may proceed on

equipment, materials, computer hardware and software when the drawings and data therefore have been returned with no corrections or exceptions noted; or when drawings have been returned with corrections or exceptions noted, provided the work is performed in accordance with the Purchaser's notations.

If changes are made at the project site to the equipment to correct installation errors, due to design changes or wiring revisions, revised drawings indicating the changes made shall be prepared and submitted to the Purchaser.

1B.5.2 Final Markup Drawings & Materials. After receipt from the Purchaser of drawings marked NO EXCEPTIONS NOTED or RECEIVED FOR DISTRIBUTION, the Contractor shall transmit _____ (___) print(s) of the final markup drawings to the Purchaser for final distribution.

1B.6 INSTRUCTION MANUALS/DOCUMENTATION. The Contractor shall furnish instruction manual and documentation bound in a binder suitable for long term rough usage. Front covers of the manuals shall be permanently marked with lettering indicating Purchaser's name, plant name, name of equipment, and name of manufacturer.

The manuals shall include the following information specific to each component or piece of equipment supplied by the Contractor:

- Table of Contents and index tabs.
- Name, address, telephone number, and fax number of the local and national service representative and supplier and 24 hour emergency service contact.
- Specifications, test data.
- Description of the equipment.
- Instructions in the methods of receiving, inspection, storage, and handling prior to installation.
- Installation instructions.
- Operating instructions.
- Maintenance instructions.
- Assembly drawings.
- Parts list.
- List of acceptable lubricants.
- List of recommended spare parts.
- List of maintenance tools provided with equipment.

The above listed requirements are the minimum. Additional information that is necessary for proper installation, operation and care of the equipment shall also be included.

One copy of the instruction manual shall be submitted to the Purchaser for review. After the manual has been approved, the final _____ (___) copies should be sent to the Purchaser.

Section 1C - SCHEDULE

1C.1 GENERAL. This section covers the schedule and scheduling requirements for performance and completion of the work included under this Contract.

1C.2 SCHEDULE. Milestone, payment and delivery schedules are defined below. The completion dates indicated are essential to the work under this Contract and to the coordination and continuity of other Purchaser work activities..

The listing of activities and dates is not intended to be a complete or detailed listing of all work under this Contract or of all interfaces with the work of other contractors.

It is understood and agreed that the dates shown within the Milestone and the Payment and Delivery Schedules are the latest feasible completion dates and that earlier dates may be attained as agreed to by the Purchaser and the Contractor.

Milestone	Date
Issue Request For Proposal	
Receive Bidder responses to RFP including detailed data input requirements	
Contract award	
Purchaser receive initial design documents	
Factory acceptance testing	
Delivery of all equipment, materials, software and documentation for Continuous Emission Monitoring System to site	
Plant Outage for CEMS tie in.	
System installation and commissioning complete	
On-site training	
System acceptance testing and reporting complete	
Punch list items and final acceptance CEMS complete	
As-built drawings complete	

1C.3 PRELIMINARY SCHEDULE. The Contractor shall submit, as part of his proposal, a preliminary schedule of the work. This preliminary schedule shall include a bar chart showing all major activities. The Contractor shall also submit with his proposal a work plan, which describes the activities in sufficient detail to clearly show his understanding of the concentrated effort and coordination required to complete the work by the scheduled contract completion date.

1C.4 CONTRACTOR'S DETAILED SCHEDULE. Within 15 days after the date of contract award, the Contractor shall submit a detailed schedule. The detailed schedule shall be based upon the dates specified in the schedule included herein.

The detailed schedule shall be in bar graph form acceptable to the Purchaser.

The detailed schedule shall contain all activities of the plan, including acquisition of special equipment, materials, computer hardware, and computer software. For all equipment and materials supplied by the Contractor especially for this project, the schedule shall include the sequence of activities including issuance of purchase orders, preparation of drawing markups and delivery. Each activity shall be identified on the schedule by a descriptive title and shall be assigned an estimated number of working days required and an expected completion date.

Schedules returned to the Contractor for revision or correction shall be resubmitted for review within ___ calendar days. Upon acceptance by the Purchaser of the detailed schedule of activities, the Contractor will be responsible for maintaining such schedule.

Section 1D - OTHER REQUIREMENTS

1D.1 GENERAL. These requirements apply in general to all equipment, materials, computer hardware, and software and are supplementary to the technical requirements. If requirements specified herein are in conflict with the requirements specified in the technical requirements, the technical requirements shall govern to the extent of such conflict.

The Contractor's proposal shall be based upon the use of equipment and materials complying fully with the requirements specified in this Section. It is recognized that the Contractor may have standardized on the use of certain components, materials, processes, or procedures different than those specified herein. Alternates in addition to the base proposal on the basis of supplying the Contractor's standard components, materials, processes, or procedures will be considered. The alternate proposal shall clearly stipulate the alternate proposed, the specific exceptions to the specification, and the price change applicable for supplying such alternate.

1D.2 REFERENCED STANDARDS. . Reference to the standards of any technical society, organization, or association, or to the laws, ordinances, or codes of governmental authorities shall mean the latest standard, code, or specification adopted, published, and effective at the date of taking bids unless specifically stated otherwise in this specification.

The specifications, codes, and standards referenced in this specification (including addenda, amendments, and errata) shall govern in all cases where references thereto are made except where they conflict with this specification. In case of conflict between the referenced specifications, codes, or standards and this specification, the latter shall govern to the extent of such difference.

All engineered equipment manufactured under this specification and the associated engineering for the manufacture shall be in accordance with the codes and standards detailed in the specification sections and the following codes and standards.

For engineered equipment manufactured under this specification and the associated engineering for that engineered equipment, reference in these specifications is made to only USA standards, codes, and specifications, and the equipment, materials, and workmanship furnished under these specifications shall be in accordance with the standards, code, or specification designated. Equivalent standards, codes and specifications of other authorities will be considered when submitted to the Purchaser or Owner's Representative in the English language. If the proposed substitute standards, codes, or specifications are acceptable to the Purchaser and the Owner's Representative, their use will be authorized in writing. In the event the substitute standards, codes, or specifications are not acceptable, the work shall proceed in accordance with USA standards, codes, and specifications designated in the specifications.

All materials furnished and installation procedures used under this specification shall conform with accepted good engineering practice, the codes and standards detailed in the specification sections, and the requirements of the applicable Romanian standards.

1D.2.1 List of References. All engineered equipment, engineering, materials, and installation provided under this specification shall be in accordance with the following codes and standards.

Works	In Accordance With
Software Development & Testing	ISO 9001 Guidelines
Continuous Emission Monitoring System	40 CFR Part 75
	40 CFR Part 60
	EU Directive No.2001/80/EC
Instrumentation / Insulation	ANSI (American National Standards Institute)
Protection & Process Heat	ASME (American Society of Mechanical Engineers)
Tracing	ASTM (American Society for Testing Materials)
	FM (Factory Mutual)
	IEEE (Institute of Electrical and Electronics Engineers)
	ISA (Instrument Society of America)
	NEMA (National Electrical Manufacturers' Assoc)
Flanges	ANSI B16.5
Piping	ANSI B31.1 (Power Piping)

All materials furnished and installation procedures used under this specification shall conform with accepted good engineering practice, the codes and standards detailed in the specification sections, standards such as the ANSI Code for Pressure Piping, the appropriate sections of the ASME Boiler and Pressure Vessel Code, applicable NEMA, UL, NEC, and IEEE standards, all federal and state laws and local regulations, and in accordance the following EU, DIN, and Romanian standards

Works	In Accordance With EU/DIN/Romanian Standards
Materials Furnished and Installation Procedures	EN 60068-2-38 - Climate Class
	EN 60529 - Protection Class of Housing (IP Code)
	EN 60204-1 - Standard Voltages
	EEC 73/23 - Low Voltage Equipment Directive
	EN 60068-2-64 - Vibration Resistance
	IEC 364-4-41 - Protection Against Electric Shock
	EN 55011 - EMC (Electromagnetic Compatibility) Radio Interference
	EN 61320 - EMC (Electromagnetic Compatibility)

Works	In Accordance With EU/DIN/Romanian Standards
Materials Furnished and Installation Procedures (continued)	Interference Emission/Interference Immunity EN 61326 - EMC (Electromagnetic Compatibility) Emissions Compatibility – Appendix A – Industrial Area EN 61010 - Protection Measures for Electrical Equipment for Measurements, Control, Regulation and Laboratory Procedures DIN 43763 - Form D - Protecting tube for TC's and RTD's, EN 13445 - Pressure Vessels, EN 10216 - Seamless steel tubes EN10217 - Welded steel tubes

1D.3 MATERIALS. Unless specifically provided otherwise in each case, all materials and equipment furnished for permanent installation in the work shall conform to applicable standard specifications and shall be new, unused, and undamaged.

1D.4 IDENTIFICATION. All shipping notices and other documents pertaining to the equipment and materials furnished under this specification shall be identified as follows:

ELCEN
ADDRESS

Attention: CONTACT NAME

1D.5 SHIPMENTS. All shipments shall be F.O.B. destination, freight allowed.

The Contractor shall discuss with the Purchaser the routing of shipments and shall route the same as indicated by the Purchaser provided freight rates are no greater than by other routes. Shipments are accepted Monday through Friday from 8:00 a.m. to 4:00 p.m.

All shipments shall be delivered to the Contractor at:

ELCEN
PLANT ADDRESS

Attention: CONTACT NAME

The equipment shall be shipped boxed, crated, or otherwise protected against damage during shipment, handling, and storage at the Project Site. Openings shall be closed with caps, plugs, or other suitable closure devices suitable for rough usage. Packaging shall be suitable to prevent moisture or water damage during shipment and outdoor storage at the Project Site.

The shipping forms must include the following content:

- Fiscal bill (invoice).
- Shipping notice.
- Certificate of origin.
- Factory testing certificate.
- Quality and conformity certificate.
- Guarantee certificate.
- EUR certificate.
- Transport certificate.
- Import statement value.
- Insurance policy-"for all risks".

1D.6 SHIPPING NOTICE. The Contractor shall submit to the Purchaser duplicate copies of shipping notices describing each shipment of material, equipment, computer hardware, or software. Climate control requirements shall be included. The shipping notices shall be mailed to arrive approximately ___ days ahead of the estimated shipment arrival. The addressee for each shipping notice will be CONTACT NAME.

1D.7 MATERIAL LIST. The Contractor shall prepare and submit with the first shipping notice duplicate copies of an itemized materials list covering all material, equipment, computer hardware and software furnished under this specification. The materials list shall be in sufficient detail to permit an accurate determination of the completion of shipment.

1D.8 CORRECTION OF ERRORS. Equipment and materials shall be complete in all respects within the limits herein outlined. All errors or omissions required to be corrected in the field shall be done by the Contractor or his duly authorized representative at the Contractor's expense.

1D.9 QUALITY ASSURANCE. The Contractor shall maintain a quality assurance program that provides that equipment, materials, and services under this specification whether manufactured or performed within the Contractor's plant or at any other source shall be controlled at all points necessary to assure conformance to contractual requirements. The program shall provide for the prevention and ready detection of discrepancies and for timely and positive corrective action. The Contractor shall make objective evidence of quality conformance readily available to the Purchaser. Instructions and records for quality assurance shall be controlled. Evidence of the Contractor's quality assurance program shall be submitted as a part of the proposal.

Section 2A – TECHNICAL REQUIREMENTS

2A.1 GENERAL INTENTION. It is the intention of the Purchaser to purchase a complete Continuous Emission Monitoring System for PLANT NAME and UNIT NUMBER. The primary purpose of this system is to measure, calculate, and record specified flue gas emissions from the unit stack to ensure compliance with all applicable EU, Romanian, and local emission regulations.

The system shall be designed with emphasis on ease of use by the plant operating personnel and shall be designed to operate in a power plant environment with a high degree of reliability.

The Purchaser intends to purchase the complete Continuous Emission Monitoring System from a single party contractor. This will ensure that the successful Contractor has complete control of meeting the manufacturing, installation, testing, and operation deadlines. The plant I&C and Engineering staff will provide oversight and review during the implementation of the system to ensure a safe and reliable installation. The Contractors services shall include but are not limited to providing sampling/processing instrumentation, computer hardware and software, parametric testing, model development, equipment purchase and delivery, hardware and software installation, communication between their system and the _____ DCS and/or _____ historian, control logic design modifications and drawing markups, DCS screen-building design recommendations and oversight, system documentation, training, and warranty, as well as all other legal obligations that arise in connection with this contract.

Any training, additional hardware, software or special tools needed to extend the capabilities of the proposed system should be identified. The Purchaser expects to have all of the tools and knowledge required to maintain the Continuous Emission Monitoring System at the unit

2A.2 UNIT DESCRIPTIONS. The _____ Generating Plant is located in _____, Romania and consists of _____ (specific number and fuel type)-fired units firing fuel from _____. Unit __ is equipped with a _____ for particulate control, _____ for NOx control, and _____ for SO2 control. Unit ___ has the ability to move load in a ____ MW band without general restrictions. A summary of key unit variables is included below. (FILL IN THE TABLE WITH KEY INFORMATION ABOUT THE UNIT INCLUDING PRESENCE OF OVERFIRE AIR, INFORMATION ON BURNERS AND DATA RELATED TO COMBUSTION CONTROL.)

Parameter	Value	Units
Meteorological Data		
Dry Bulb Temperature		C
Annual Average Temperature		C
Design Low Temperature		C
Annual Average Relative Humidity		%
Maximum Relative Humidity		%

Design Wind Speed		km/h
Site Elevation		M above MSL
Annual Average Precipitation		cm
Greatest 24-hour Precipitation		cm
Seismic Design Data		
Effective Peak Acceleration (A_a)		G
Effective Peak Velocity-Rated Acceleration (Av)		G
Compliance Requirements		
EU Directive No.2001/80/EC and 40 CFR Part 60		
EU Directive No.2001/80/EC and 40 CFR Part 75		
Design Information		
Maximum Flue Gas Design Temperature		C
Flue Gas Design Pressure		kPa
Stack / duct diameter		m
Distance from sample point to CEM cabinet		m
Distance from sample point to upstream disturbances, diameters		m
Distance from sample point to downstream disturbances, diameters		m
Type of CEM system required		

2A.3 DCS DESCRIPTION.

The Contractor shall provide all the hardware and software required to establish the communication interface between the Continuous Emission Monitoring System, its peripherals, the _____ DCS, _____ historian, and _____Performance Monitoring System *(NOTE TO SPEC DEVELOPER: THE UNIT MAY NOT HAVE A PERFORMANCE MONITORING SYSTEM. EDIT AS APPROPRIATE).* The Contractor shall also be responsible for any software license fees and hardware that may be required to interface with the _____ DAS and the interface software shall be capable of being modified for future changes in the _____ DAS.

2A.4 GENERAL SOFTWARE REQUIREMENTS. The Continuous Emission Monitoring System unit shall be designed to operate using the Windows ___ or UNIX operating system on a _____ computer. The Continuous Emission Monitoring System shall be 32-bit capable and support multi-tasking processing. If the Continuous Emission Monitoring System is based on the Windows __ operating system, the system shall be fully compliant with the Microsoft Windows Object Linking and Embedding (OLE) for Process Control (OPC) standard. Compliance with the Microsoft Windows Dynamic Data Exchange (DDE) standard will be acceptable as long as plans are underway to make future software upgrades OPC compliant during the warranty period.

For ease of use, the Continuous Emission Monitoring System shall also be designed to have the appearance of standard Windows applications. The graphical user interface (GUI) shall allow quick and easy navigation through the system. The GUI shall be

consistent among all screen displays and tools to the maximum extent possible. Normal user interaction with the system shall be through the use of a mouse or keyboard.

The Contractor shall specify the type of source code used and whether the system was developed using standard procedural programming or object-oriented programming. All software associated with the Continuous Emission Monitoring System shall be designed with sufficient modularity to minimize the time and complexity involved in making a change to any system.

The Contractor shall be responsible for maintaining all software associated with the Continuous Emission Monitoring System and ensuring that the system is operating in a reliable, error-free manner. Maintenance of the software shall be accomplished using the Contractor's own maintenance tools and documentation. If the Contractor installs any hardware and software needed to perform remote system diagnostics, troubleshooting, and upgrades; then the Contractor must make a verbal request for such approval to Purchaser and get approval before performing such work. If granted permission to access the Continuous Emission Monitoring System remotely, password protection shall be used to ensure that only properly authorized personnel can make changes to the system. The method of protection shall be provided through the operating system or some other type of "firewall" and shall be mutually agreeable between the Purchaser and the Contractor. The Continuous Emission Monitoring server shall be provided to the plant with full administrative rights. The Contractor shall also provide a means of system backup without disrupting the Optimization System or requiring a system shutdown.

Any required site license fees for the CEMS software shall be included as part of the services to be provided by the Contractor under this Contract. All software updates issued by the Contractor within the first year after completion and acceptance of the Continuous Emission Monitoring System will be included in the initial purchase price and will be installed by the Contractor, either on-site or remotely, as soon as the updated software has been extensively beta tested and is available for distribution and use. Any third party software used by the Contractor as part of the Continuous Emission Monitoring System shall be included in the initial purchase price of the system and shall be covered by the warranty

2A.5 <u>GENERAL</u> <u>HARDWARE</u> <u>REQUIREMENTS</u>. The system for each unit shall be installed on a separate server computer provided by the _____(Purchaser or Contractor) and not on the existing _____ DCS, ___ historian, or other computer currently on-site.

The host computer for each unit shall have adequate central processing unit (CPU) speed and random access memory (RAM) to perform all real-time functions such as data retrieval, averaging, optimization, data updating, and other needed operations within the system optimization time cycle. There shall be sufficient hard drive space to store real-time and historical data. The Contractor shall also furnish a color printer that shall interface directly to the server computer.

The expected connection between the Contractor's equipment and Unit ___'s will be an Ethernet EIA port on a Cisco 1900 Frame Switch. It is the responsibility of the

Contractor to provide the appropriate interface between the EIA port and his equipment (10Base2 or 10BaseT). (MODIFY THIS EXAMPLE STATEMENT TO REFLECT ACTUAL UNIT CONIFIGURATION)

The connection to the Plant LAN business side firewall will be a second 10BaseT Network Interface Card to provide additional isolation between the process Ethernet and the business traffic.

The Contractor's server/computational platform will be mounted in an existing 19 inch (0,48 m) rack. The computer equipment will be supplied in a standard 19 inch (0,48 m) rack mount assembly. Distances from the rack to the Ethernet port will be ___ cable-meters. These factory fabricated interface cables will pass through cable trays and must be fabricated of "Tray Rated Cable".

The distance from the server to the work station location will be ___ cable-meters. A CRT/Keyboard/Mouse extender with a factory fabricated interface cable must be supplied to drive this distance. These cables will pass through cable trays and must be fabricated of "Tray Rated Cable".

Power will be supplied by ELCEN to all of the devices. Power will be 240 VAC from an uninterruptible power source as specified below.

2A.6 INSTRUMENTATION. Unless specified otherwise in other sections, all instrumentation components furnished with the equipment shall be constructed to withstand the temperatures, pressures, and corrosive conditions encountered in the actual service. Instruments rated for hazardous area classifications shall be furnished where required by applicable code or the detailed specifications.

2A.7 CONTROL POWER. Electrical power for control and instrumentation will be a nominal 240 volt, single-phase, 50 hertz, alternating current. The Contractor shall provide any devices required for proper operation and protection of the equipment during electrical power supply and ambient temperature fluctuations described in the following paragraphs.

2A.8 TRAINING. On-site training shall be provided to plant personnel who will be responsible for operating and using the Continuous Emission Monitoring System. During system startup and prior to system acceptance by the Purchaser, the Contractor's service representative shall hold training sessions to instruct Purchaser personnel on the operation and use of the system. Training and manuals are to be completed before the system is started and in open-loop advisory mode. Training sessions shall be customized to fit the needs of each user, including operators, engineers, supervisors, and plant managers. Each class participant shall be provided with a separate training manual intended for reference and instructional purposes. A description of the training program, schedule and duration of training sessions shall also be provided in the Contractor's proposal. All training material shall be reviewed and approved by the Purchaser. Four levels of training shall be provided:

- Operator Training (___ people) -- Basic training shall be provided to plant operators. Multiple training sessions may be required to cover all shifts.

The basic training shall consist of an overview of the Continuous Emission Monitoring System, a summary of what input and output data the system requires, an overview of how to monitor and operate the system, and how that information can be used to operate the plant more efficiently.

- Advanced Training (___ people) -- Advanced training shall be provided to technicians and engineers who will be using and maintaining the system. This training shall include all of the basic training and shall include a thorough technical explanation of the Continuous Emission Monitoring System, software installation procedures, how the visual modeling tools are installed on the server computer, methods for using the tools to diagnose performance problems, and procedures maintain the system.

- Overview Training (___ people) -- Overview training shall be provided to engineers, supervisors and plant managers. The overview training shall consist of an overview of the system and how the system can be used to operate the plant more efficiently.

The Contractor shall also include a CD-ROM disk containing all training documents so they may be merged into existing plant training manuals and procedures by the plant at PLANT NAME. The Purchaser also intends to videotape the training sessions held on-site to be used internally for training new employees and operators that are unable to attend the live sessions provided by the Contractor.

2A.9 TECHNICAL SUPPORT. The Contractor shall have technical support available in accordance with the following subsections.

2A.9.1 Telephone Support. The Contractor shall have technical support available during normal business hours. The Contractor shall have the ability when necessary to support the system via modem or network dial up during business hours.

2A.9.2 On-Site Support. The Contractor shall provide on-site support in accordance with the term of Section 1A.5.2 Contractor's Field Technical Services. Labor and expenses for other Purchaser requested on-site support will be provided in accordance with the rates specified in Section FP Financial Proposal.

Section 2B - CONTINUOUS EMISSIONS MONITORING EQUIPMENT

2B.1 GENERAL. This section covers the design and performance requirements of the continuous emissions monitoring (CEM) equipment to be furnished under these specifications. The equipment will be used to prove compliance with state and federal emission regulations and the 1990 Clean Air Act Amendments. The CEM system is intended to function as a complete, unified system consisting of four subsections: chimney emission monitoring, scrubber inlet and outlet SO2 monitoring, opacity monitoring (located ahead of the scrubber), and a central data acquisition and reporting system. A selective catalytic reduction (SCR) inlet and outlet NOx/CO2 monitoring system shall also be furnished, but it shall not interfere with the CEM data acquisition system (DAS).

2B.2 CODES, STANDARDS, AND REGULATIONS. Except where specifically stated otherwise, all equipment furnished under this section shall conform to the latest applicable standards of NEMA, ASME, ISA, ANSI, IEEE, EEI, and accepted standards as to ratings, test, construction, and operation, except where modified or supplemented by these specifications; shall be in accordance with applicable requirements of the Federal "Occupational Safety and Health Standards"; shall be in accordance with the requirements of the Environmental Protection Agency and EU Directive No.2001/80/EC.

2B.3 EMISSIONS MONITORING EQUIPMENT. Continuous emissions monitoring equipment provided shall comprise a complete system designed to function as a unit. The bidder may bid a combination of in situ and dilution extractive monitoring equipment. The proposal shall present, in detail, the makeup of equipment proposed.

Descriptions of specific monitoring requirements are included in this section.

2B.3.1 General Equipment Requirements. Equipment shall include all enclosures, nameplates, mounting and alignment hardware, sample line tubing, tubing heaters and heater controllers, piping, supports, valves, fittings, pressure regulating valves, relief valves, solenoids, blowers, gas dryers, sample pumps, filters, coolers, analyzers, signal conversion equipment, data acquisition system, and other equipment to make a complete system.

Sampling frequency shall be in compliance with EPA and EU Directive No.2001/80/EC requirements.

The Contractor shall furnish all power transformers, all power distribution panels, and all junction boxes required to distribute power to all emission monitoring equipment furnished. This shall include but not be limited to all analyzers, air conditioners, and heat tracing.

Electrical power will be provided by others to each analyzer equipment enclosure. Two sources of 120 volt ac power from the Purchaser's uninterruptible power system will be provided for analyzers, controls, and DAS system equipment. Two sources of 480 volt ac

3-phase power will be provided for auxiliary loads. The Contractor shall provide an automatic switching device to transfer 120 volt ac or 480 volt ac to a backup power source upon primary source power failure.

Any compressed air and electric utilities required by sampling and measuring equipment located at the remote sampling site shall be carried within the sample tube bundle, except power supply and signal interconnection cabling between the analyzer enclosure and the flow monitors, opacity monitors, and associated purge blowers will be supplied and installed by the Purchaser's erector.

All proposed equipment shall be furnished as totally coordinated assemblies, which, unless otherwise specified, shall comply with all applicable EPA design and performance requirements as defined elsewhere in these specifications. The bidder shall provide documentation of system compliance with EPA procedures for data reduction of equipment raw signal data to units of the EPA standard.

All probes and all material exposed to the flue gas stream shall be Hastelloy C276. Enclosures for chimney and duct mounted equipment shall be NEMA 4X.

The contract shall include all gases necessary for startup and certification services.

The equipment shall be shop installed and/or skid mounted to the maximum extent possible.

2B.3.2 Equipment Installation. All equipment mounted remote from the analyzer enclosure (probes, transducers, and similar equipment) will be installed by others under separate specifications. The installation facilities provided in the Purchaser's stack or ductwork will consist of connections as described in the respective articles contained within this section. If the Contractor requires a mounting flange of a different size for installation of the equipment, it shall be noted in his proposal. The Contractor shall provide all attachment brackets, plates, or fixtures, bolts, nuts, washers, and supports required to attach the equipment to these connections.

Where the Contractor's system utilizes separate logic and/or signal conditioners in addition to the stack or duct mounted monitors, these shall be furnished complete in free-standing enclosures. The Purchaser will provide interconnecting wiring between the monitors and separate enclosures.

2B.3.3 Equipment Functions. Automatic self-calibration consisting of zero and span checks shall be provided on the instruments with a frequency of at least that required by applicable federal and state regulations unless the Contractor's equipment requires more frequent calibration. Required calibration frequency shall be as stated in the proposal data. Manually initiated calibration through the CEMS DAS shall be available. Zero and span

values shall be automatically recorded in the CEMS data acquisition system. The anticipated usage rate for each different type of calibration gas shall be stated in the proposal.

2B.3.4 Sample Collection and Conditioning Equipment. As required for the specific sampling technology, all equipment necessary to draw, filter, dry, condition, and transport samples and to periodically purge sample lines and probes shall be furnished. Two stages of sample filters shall remove 99.99 percent of fine particulate matter to 0.1 micron and larger from the sample. Sample collection equipment and analyzers shall be located in racks or cabinets in the flue gas analyzer enclosure.

For the dilution extractive system to be located downstream of the scrubber, the sample probe and all sample conditioning equipment upstream of and including the sample dilution point shall be heated. The operating temperature of this equipment shall be as required to prevent plugging, reaction, or other conditions that could detrimentally impact the accuracy of the overall system.

Probes, tubing, fittings, valves, pump components, and miscellaneous hardware in contact with the sample gas, prior to dilution for a dilution extractive system, shall be constructed of Hastelloy C276 (except for sample tubing which shall be as specified herein). Probe internal surface shall be Teflon lined.

2B.3.5 Volumetric Flow Rate. Volumetric flow rate measurement shall use the differential pressure technique. All transducers, transmitters, signal converters, flanges, and accessory equipment required to measure and compute stack gas volumetric flow in (wet) standard cubic feet per hour shall be furnished. Flow measurement probes and transducers shall be located in an easily accessible area. The measurement shall be temperature compensated and shall include all necessary equipment to protect, clean, and purge the components of the flow rate measuring equipment. Temperature measurement devices shall be located so that purging does not affect the temperature compensation. If differential pressure flow elements are furnished, they shall be provided with multiple ports for sensing the "impact" or total pressure.

The measurement system shall include the following features:

Digital flow readout in standard cubic feet per hour (scfh).

Zero and span adjustments.

Automatic daily calibration as required by EU Directive No.2001/80/EC, 40 CFR Part 75 and local requirements.

An isolated 4 to 20 mA dc analog output that varies linearly in proportion to the temperature compensated volumetric flow rate for input to the CEMS data reduction computer for use in calculations and reporting in the manner prescribed by the EPA.

The differential pressure type flow rate primary element(s) shall be acceptable to the Engineer. All flow measurement components and hardware which contact the flue gas stream shall be Hastelloy C276, Teflon or Teflon lined. The supplier shall furnish a suitable 3-valve manifold designed to be directly coupled to each transmitter. Detailed flow calculation drawings which show the equations and variables used to relate primary element differential pressure to flow shall be submitted to the Engineer for review.

The system accuracy and span shall meet 40 CFR 60 Appendix B Performance Specification 6, 40 CFR 52 Appendix E, 40 CFR 75 and shall be capable of direct calibration by EPA Method 2.

2B.3.6 Gas Analyzers. The Contractor shall furnish sulfur dioxide, nitrogen oxides (NO and NO2), and diluent carbon dioxide analyzers as required for each system in Article 2B.4. Analyzers shall display a digital readout of the measured gas in engineering units (ppmv). Analyzer span ranges shall be as listed in Article 2B.4.

Analyzers for the chimney NOx and SO2 monitoring shall be dual range. Range selection shall be automatic with manual override. In automatic mode, the low range shall be automatically selected when the measured concentration of the gas is less than 25 percent of the high range span. The high range shall be automatically selected when the measured concentration of the gas is greater than 75 percent of the low range span.

The flue gas analyzers and monitors shall be sensitive to changes of less than 1.0 percent of scale. Concentration measurements shall be automatically corrected for flue gas temperature and pressure variations at the sample collection point and barometric pressure changes. Any indicator necessary for this function shall be provided and incorporated into the system design.

Monitors and analyzers shall be mounted in rack type cabinets in the flue gas analyzer enclosures.

2B.3.7 Opacity Monitors. Opacity monitors shall be double pass transmissometers. The opacity monitor shall have a single lamp for measurements and calibrations. The system accuracy, span, and calibration procedures shall meet all performance and equipment specifications of 40 CFR 75.

Opacity monitors shall include the following features:

Digital readout in percent opacity and transmittance.

Zero and span adjustments.

Manual and automatic daily calibration.

Any special tools required for adjustment, maintenance, or routine audits (This shall include, but not be limited to, zero jig, filter sets, reflectors, test stands, etc.).

Purge blowers shall be supplied to prevent dust from entering the lens area.

2B.3.8 Sample Lines. The Contractor shall furnish all sample lines required to transport extractive gas samples from the sample probes to the analyzers. Sample tubes shall be incorporated as a single tube bundle. The bundle shall have a protective polyurethane cover which protects and binds the enclosed tubing and wiring together. Tubing for the extracted sample shall be 3/8 inch (0,01 m) OD, minimum, for dilution extractive systems and calibration gas lines. All sample and calibration gas tubing shall be Teflon. Two spare sample tubes shall be included in the tube bundle. Dilution extractive system sample lines shall be heat traced to maintain sample temperatures above 4,5 ^{0}C (40 F). Heat tracing shall have adjustable temperature controllers included to allow adjustment of sample line temperature. Sample tubing support trays will be provided by the Purchaser. The Contractor shall supply all special stress relief ties required to secure tubing to the tray.

A unit price for the sample line shall be stated in the space provided in the proposal for adjusting the required lengths as necessary for field routing.

NOTE TO SPEC DEVELOPER. EDIT THE NUMBER AND NAMES OF SAMPLE LOCATIONS S AS APPROPRIATE

Sample Location	Line Length to Monitor Enclosure, meters
Stack	NUMBER
Scrubber Module 1A Outlet	NUMBER
Scrubber Module 1B Outlet	NUMBER
Scrubber Module Outlet	NUMBER
Scrubber Inlet North Sample	NUMBER
Scrubber Inlet South Sample	NUMBER
SCR Inlet	NUMBER
SCR Outlet	NUMBER

2B.3.9 Dilution Extractive Air Cleanup System. All dilution extractive CEM systems shall be supplied with a dilution air cleanup system. A maximum of one CEM system shall be served by one air cleanup system. The function of this system shall be to remove water, solid materials, and any contaminants from the plant air supply that may adversely affect the CEM systems or system accuracy.

Each air cleanup system shall be composed of two separate redundant air cleanup trains with common equipment in front and behind the two trains. Each train shall be full capacity (100 percent) and shall remove background levels of NOx, SO2, CO2, and CO.

Each train of equipment shall be identical and completely independent.

The air cleanup systems shall be wall mounted inside the CEM enclosures. Easy access shall be provided to all components of the system. Piping shall be either red brass with red brass fittings or Type K copper tubing with Swagelok fittings. All piping systems shall be cleaned to remove all oil, water, dirt, and other contaminants before the air cleanup systems are used. All piping and components shall have a minimum rating of 10,3 bar at 100 ^{0}C.

Each air cleanup system shall contain the following equipment as a minimum. The items that shall be in the identical redundant trains are labeled. The order shown shall be the approximate order of the equipment in the piping:

(1)Inlet air pressure gauge (common).

(2)Coalescing type filter (redundant train).

(3)Pressure regulator with 25 micron filter (redundant train).

(4)SOx/NOx absorbing filter (redundant train).

(5)Desiccant dryer (redundant train).

(6)Filter, 5 micron (redundant train).

(7)Desiccant dryer/CO2 absorber (redundant train).

(8)Activated carbon filter (redundant train).

(9)Check valve (redundant train).

(10)Surge tank, ASME code tank, 0,028 m^3 volume minimum (common).

(11)Sight flow indicator (common).

(12)Final filter, 5 micron (common).

(13)Valves for blowdown purposes as required (common).

(14)Valves to isolate redundant trains of air cleanup shall be provided (redundant train).

(15) Moisture indicator (common).

Each train of redundant cleanup system items shall have a valve at the beginning and end of each train for isolation purposes.

2B.3.10 Flue Gas Analyzer Walk-In Enclosures. Walk-in, dust-tight preassembled fiberglass enclosures, constructed in accordance with applicable NFPA and NEC requirements, shall be furnished for housing all extractive flue gas analyzers, associated sample collection equipment, air cleanup, control, backup data logging, and signal conversion equipment. The interior of each enclosure shall be furnished with manufacturer's standard furnishings, light fixtures, and fire extinguisher. The enclosure floor shall have a vinyl tile floor covering. The interior walls shall be fire-resistant. Wood grain wall covering is not acceptable. The exterior of each enclosure shall be a 0,001 m (0,04 inch) white aluminum skin.

Fasteners, connection materials, and hardware used to assemble the enclosure shall be corrosion-resistant. Enclosure panel joints and panel penetrations shall be sealed with a silicone caulking compound. The silicone caulking compound shall remain flexible after curing and provide a weathertight enclosure.

The enclosures shall be equipped with a minimum of two removable skids to facilitate handling. The enclosures shall be designed to be securely anchored at each corner as a minimum.

Lifting rings shall be provided to facilitate handling.

The dry chemical portable fire extinguishers shall be ammonium phosphate extinguishers of the 20 pound size minimum, squeeze grip type, stored pressure extinguishers, complete with wall mounting brackets as required by the fire extinguisher installation. The extinguishers shall carry a minimum UL rating of 10A:80BC. The extinguishers shall be of steel construction with a neoprene or synthetic rubber hose. Exterior finish shall be manufacturer's standard.

Each enclosure shall be sized so that all equipment in cabinets/racks inside are completely accessible and that 0,92 m (36 inch) minimum space is provided between the obstruction and portions of the cabinet/racks requiring access. Ceiling height shall be 0,18-0,15 m (7-6 inch)

The Contractor shall include a 0,762 m (30 inch) by 1,524 m (60 inch) workbench in each enclosure. Each enclosure shall be equipped with a backflow air damper.

Each enclosure shall contain the required analyzers, valving, condensers, sample pumps, switches, and other equipment as required to extract sample gas through the probes and make analysis of the gas.

Each enclosure shall have 0,051 m (2 inch) R12 insulation and two full capacity, thermostatically controlled industrial grade air conditioning/heating units. Each enclosure shall be provided with a power service entrance, separate power distribution panels for 120 volt ac and 480 volt ac service, and common terminal box for outgoing control and instrument cables.

The space conditioning system shall provide a small amount of outdoor air to pressurize the CEM equipment enclosure. The outdoor airflow shall operate continuously and shall be manually adjustable.

The space conditioning equipment shall be capable of operating in the cooling mode down to an outdoor temperature of -10 ^{0}C. The return and outdoor air shall flow through a Farr 30/30 or equal filter rack.

As a minimum, space conditioning shall provide two room air changes every 5 minutes. Heating and cooling requirements shall be sized to allow for room air changes. Redundant air conditioning units shall be furnished.

The indoor design temperature of the enclosure shall be 25 ^{0}C db/17 ^{0} C (wet bulb) for both summer and winter. The design cooling load shall be calculated at the design temperatures given and shall include, but not be limited to, the following loads:

Enclosure transmission.

All electrical equipment is operating.

Lights.

People (two people per 7.5 square meter floor area).

The design heating loads shall be calculated at the design temperatures given, and credits for heat gains from equipment or other sources shall not be allowed.

Enclosure drawings submitted shall include space conditioning, lighting, and electrical and shall indicate all structural support loads, electrical power requirements, and other engineering data.

Electric power will be provided by the Purchaser for each enclosure. Power transformers, if required, shall be provided by the Contractor for indoor service and located external to the enclosure. Each enclosure shall be furnished with at least six convenience receptacles, fluorescent lighting (645 lumens per square meter average), and two separate light switches.

Each enclosure shall have one fully gasketed entry door with drip shield. Each door shall have a deadbolt lock provided. This lock shall open from the inside without a key. Two keys shall be provided. Door hardware shall be corrosion-resistant.

Interconnecting wiring outside of equipment cabinets/racks in the enclosure shall be in covered raceways. All interconnecting wiring, including interconnection of equipment grounding, shall be installed and tested at the factory. Provisions shall be made to facilitate connection of the equipment to the plant grounding system. Terminal blocks shall be in accordance with Section ER.

All water plumbing, instrument air piping, electrical wiring, and sample vent and drain piping shall be installed and tested at the factory. The Contractor shall provide connections for piping to plant services or analyzers outside the enclosure. Penetrations shall be provided for sample tubing and calibration gas tubing to be provided by the Contractor and installed by the Purchaser. A NEMA 4X terminal box or boxes shall be mounted on the outside wall for all instrument and control wiring to analyzers and to the CEMS DAS computer. The terminal box shall be separate from power service circuits and shall be sized to allow 20 percent spare terminals. Roof or top of outdoor junction box conduit entrances are not allowed. The enclosure shall be equipped with a ground bus consisting of a 6 AWG solid copper wire installed around the interior perimeter of the enclosure. This ground loop shall be securely fastened at 16 inch centers to each wall approximately 0,051 m (2 inches) above the finished floor. The ends shall be connected by 6 AWG ground lugs to a 0,013 m (1/2 inch) by 0,114 m (4 ½ inch) brass bolt installed through the enclosure floor. Two separate 4 AWG ground lugs shall be provided for connection to the exterior ground system.

A total of three enclosures shall be provided. The enclosures shall house the following systems: ***NOTE TO SPEC DEVELOPER. EDIT THE NUMBER AND NAMES OF ENCLOSURES AS APPROPRIATE.***

Chimney emission monitoring and flue gas opacity monitoring system.

Flue gas wet scrubber SO2 monitoring system.

SCR NOx/CO2 monitoring system.

Each enclosure will be installed on grating and shall be provided with vibration dampeners. Each enclosure will be located in an enclosed area. The maximum size of the enclosures

shall be 2.8 meters by 3.2 meters (9'-2" by 10'-6"). Any items protruding from the sides of the enclosure such as junction boxes or air conditioners shall be designed to be removable for installation of the enclosures. Detailed instructions shall be provided for reinstallation of such items.

2B.3.11 Calibration Gas Supply. Calibration gas cylinders for startup and certification will be provided by the Contractor. The Contractor shall furnish all piping, tubing, regulators, valves, fittings, manifolds, gauges, and associated hardware to connect the gas cylinders and control flow to each device in the CEMS requiring gas. Gas supply piping and associated components in contact with the flue gas shall be Hastelloy C276. All other gas supply components shall be stainless steel or Teflon.

A free-standing cylinder rack to hold the gas cylinders shall be provided for each enclosure. The rack shall include space for each cylinder and one empty space. Cylinders shall be restrained and marked with appropriate safety and warning signs to meet OSHA safety standards.

2B.4 SPECIFIC MONITORING REQUIREMENTS. Specific monitoring requirements shall be in accordance with the following paragraphs. The monitor span ranges included are preliminary. The Engineer will submit final ranges not later than 6 months prior to shipment. The contract shall include all modifications to equipment and software programs necessary for the final ranges.

2B.4.1 Chimney Emissions Monitoring Equipment. Redundant sulfur dioxide, nitrogen dioxide, diluent carbon dioxide, flow, and temperature monitoring systems shall be furnished to monitor stack effluent flue gas. The monitoring system shall fulfill the following requirements:

Monitor span ranges	0-X lb mg/Nm^3 SO2 0-X lb mg/Nm^3 NOx 0-X percent CO2 0-X C 0-X kg/h flow
Process conditions	
Pressure	+X kPa maximum
Temperature	X C normal X C 30 minutes abnormal maximum excursion
Moisture	Saturated with H2O High H2SO4, HC1, and

	NH3 (0-10 ppm) content.
Liner width	
At monitor location	X meter
At exit	X meter
Ambient temperature	X to X C

0,25 m (10 inch), 68 kg flange connections are provided at the chimney for interfacing with SO2 monitors. 0,15 m (6 inch), 68 kg flange connections are provided at the chimney for interfacing with the NOx, CO2, and flow monitors.

Dilution type extractive systems for chimney emissions monitoring shall include redundant "hot" standby analyzers mounted in racks in the analyzer enclosure for each analyzer furnished. On failure of the primary analyzer, the data provided by the redundant (secondary) analyzer shall automatically be used for reporting purposes. Data shall be recorded for the secondary analyzer at all times while it is operating. Failure of the primary analyzer shall initiate an alarm. A duplicate, redundant sample line shall be provided for installation alongside the operating sample line in the cable support tray. The redundant sample line shall be capped at the chimney end to prevent intrusion of foreign matter, and each individual tube line shall be marked so as to be easily identified for attachment to the probe when required. The redundant sample line shall pass through the bulkhead plate of the analyzer enclosure and shall be capped at the end to prevent intrusion of foreign matter. Each tube line and the electrical wiring for the heat tracing shall be marked so as to be easily identified for connection to the sample analysis system, instrument air supply, calibration gas supply, or electrical power supply.

In situ type monitoring systems for chimney emissions monitoring shall include redundant "hot" standby monitors installed in the chimney. On failure of the primary analyzer, the data provided by the redundant (secondary) analyzer shall automatically be used for reporting purposes. Data shall be recorded for the secondary analyzer at all times while it is operating. Failure of the primary analyzer shall initiate an alarm.

2B.4.2 Flue Gas Opacity Monitoring System. Two flue gas opacity monitors shall be furnished, one in the discharge duct of each induced draft fan (ID). Each monitor shall fulfill the following requirements:

Monitor span range	0-100 percent opacity
Process conditions	
Ammonia	0-XX ppm

Pressure	+ X kPa maximum
Temperature	X C normal maximum X C 30 minutes abnormal maximum excursion
Duct width	Nominal X meter
Ambient temperature	X C to X C

The signals from the two opacity monitors shall be combined to provide a common output signal corrected to a 19 meter diameter stack outlet path length. The individual opacity signals shall also be weighted by the respective ID fan loading and speed. Input signals representing fan motor amperes and contacts for fan speed (high, low, or off) will be provided to the opacity monitoring system. The motor ampere signal will be 4 to 20 mA dc.

Four 0,102 m (4 inch), carbon steel, Schedule 40 pipe connections are provided on the ID fans discharge duct.

NOTE TO SPEC DEVELOPER: SECTIONS 2.B.4.3 AND 2.B.4.4 ARE OPTIONAL. REMOVE IF NOT APPROPRIATE TO THIS SPECIFIC PROJECT.

2B.4.3 Flue Gas Wet Scrubber Sulfur Dioxide Monitoring Systems. Two in situ or two extractive sulfur dioxide and diluent carbon dioxide monitors for the scrubber inlet flue gas stream shall be furnished. Monitors or sample probes shall be mounted in scrubber inlet plenum above the ID fan discharge ducts. Each monitor shall fulfill the following requirements:

Monitor span range	0- X mg/Nm^3 SO2
Diluent span range	0- X percent CO2
Process conditions	
Pressure	+ X kPa maximum
Temperature	X C normal maximum X C 30 minutes abnormal maximum excursion
Ammonia	0- X ppm
Duct width	X meter

Ambient temperature	X C to X C

Two 0,051 m (2 inch), carbon steel, Schedule 40 pipe connections are provided.

Three in situ or one extractive sulfur dioxide and diluent carbon dioxide monitors to monitor the sulfur dioxide in the flue gas exiting the three scrubber modules shall be furnished. Each monitor shall fulfill the following requirements:

Monitor span range	0- X mg/Nm^3 SO2
Diluent span range	0- X percent CO2
Process conditions	
Pressure	+ X kPa maximum
Temperature	X C normal
Moisture	Saturated with H2O High H2SO4 and HC1 content
Duct width	X meter
Ambient temperature	X C to X C (outdoor)

Two ___ cm (___ inch) rubber lined flanged connections are provided on the outlet of each module for SO2 or CO2 monitoring.

The scrubber inlet sulfur dioxide concentration, as determined by averaging the monitor signals from monitors above active ID fans, shall be transmitted by independent 4 to 20 mA dc output signals to the Purchaser's scrubber control system and to the Contractor supplied data acquisition system. These signals will be used for scrubber control. The inlet monitors shall be capable of being EPA certified.

The individual scrubber outlet sulfur dioxide concentration shall be transmitted by independent 4 to 20 mA dc output signals to the Purchaser's scrubber control system. These signals will be used for scrubber monitoring.

2B.4.4 <u>SCR Inlet and Outlet NOx/CO2 Monitoring System</u>. Two in situ or one extractive nitrogen oxide and diluent carbon dioxide monitors for the SCR inlet flue gas stream shall be provided. Monitors or sample probes shall be mounted on the SCR inlet duct. Each monitor shall fulfill the following requirements:

Monitor span range	0- X mg/Nm^3 NOx
Diluent span range	0- X percent CO2
Process conditions	
Pressure	± X kPa maximum
Temperature	X C
Duct width X feet	
Ambient temperature	X C to X C

Two in situ or one extractive nitrogen oxide and diluent carbon dioxide monitors for the SCR outlet flue gas stream shall be provided. Monitors or sample probes shall be mounted on the SCR outlet duct. Each monitor shall fulfill the following requirements:

Monitor span range	0- X. mg/Nm^3 NOx
Diluent span range	0- X percent CO2
Process conditions	
Pressure	± X kPa maximum
Temperature	X C
Duct width X. X feet	
Ambient temperature	X C to X C

Four 0,102 m (4 inch), carbon steel, Schedule 40 pipe connections are provided.

2B.5 <u>SYSTEM CONTROL AND DATA ACQUISITION</u>. The Contractor shall provide three system controller/data logger systems and one data acquisition system. The Contractor shall provide a system controller/data logger for each of the following systems:

Chimney emission monitoring and flue gas opacity monitoring system.

Flue gas wet scrubber SO2 monitoring system.

SCR NOx/CO2 monitoring system.

The Contractor shall provide a common data acquisition system for the chimney emission monitoring, flue gas opacity monitoring, and flue gas wet scrubber SO2 monitoring systems. The SCR NOx/CO2 monitoring system does not require a data acquisition system. The SCR NOx/CO2 monitoring system shall only transmit information to the Purchaser's DCIS.

The controller/data logging equipment for the chimney emission monitoring and flue gas opacity monitoring system shall be redundant. This shall include power supplies, processors, data storage units, and associated equipment.

The SCR NOx/CO2 system does not require a data logger to be furnished.

2B.5.1 System Controller/Data Logger. The Contractor shall furnish emissions monitoring system controllers and data logging devices to control all sampling, calibration, and backpurging functions of the emissions monitoring system and to provide initial data reduction and backup data logging. All data and alarm interfaces between the CEMS equipment and the Purchaser's equipment shall be performed at the system controllers.

The system controllers shall receive all output signals from the CEMS analyzers and monitors. The system controllers shall apply calibration factors, stack pressure correction factors, bias correction factors, and dilution ratio correction factors to the raw monitor output. The controllers shall output these corrected signals as 1 minute average values, all correction factors, and relevant plant operating parameters to the emissions monitoring data acquisition system described below under Data Acquisition and Report Generation Computer.

Representative controller inputs and outputs are shown on Tables 2B-1, 2, and 3. Controller inputs and outputs (I/O) shall include, but shall not be limited to those indicated.

The system controllers shall provide individual 4-20 mA dc signals for each parameter monitored for connection to the Purchaser's DCIS. Output signal units shall be as indicated on the tables included in this section and shall be corrected to standard diluent concentration. Failure of the data acquisition system computer or communications hardware shall not affect the availability of these signals. The system controllers shall hold the analog output signals constant at the most recent real-time value during all calibration and sample sequencing operation.

The Contractor shall provide hardware and software for bidirectional communications between the DCIS and the system controllers. This communications will allow data to be transferred from the controller to the DCIS, operator access to CEM DAS screens from the DCIS, and operator input of reason codes, etc., from the DCIS. The system shall incorporate password protection.

The system controllers shall provide backup digital storage of CEM data. The backup data storage device shall have sufficient memory to store at least 120 hours of CEM data in the event of a failure of the data acquisition system computer or communications hardware. Upon restoration of communications with the data acquisition system computer, all data logged during the communications failure shall be automatically transferred to the data acquisition system. A battery backup shall be provided for the backup data storage device if required to preserve the data in the event of a power supply failure.

The system controllers shall consist of a solid-state control system which has a user programmable memory for storage of instructions to implement specific instructions such as I/O control, Boolean logic, timing, counting, arithmetic, and data manipulation. The system controller shall consist of central processors, I/O interfaces, memory, power supplies, a programming device, and a tape or disk drive for storing and rapidly loading programs.

The central processing unit (CPU) shall be of solid-state design on modular printed circuit boards. The CPU shall be capable of interfacing with plant programmable logic controllers, computers, or printers in accordance with EIA Specification RS-232C or other communications interface common to all plant microprocessor based control equipment.

Inputs and outputs shall be electrically isolated from other I/O and from all cabinet wiring.

The Contractor shall furnish all hardware, source code, and programming parameters required for internal programming of the controller. The controller program code shall be documented such that the Purchaser can modify controller logic and set points. The program memory shall include means to guard against unauthorized changes or entry.

The system shall provide fault monitoring to detect equipment malfunction. Isolated contact outputs shall be provided for connection to the Purchaser's equipment to alarm system malfunctions remotely.

2B.5.2 Data Acquisition and Report Generation Computer. A separate, dedicated, emissions monitoring DAS complete with custom software shall be provided by _____. (EDIT AS NEEDED.) The DAS shall collect and store the CEMS data transmitted to the DAS from the system controllers and log alarms and shall use the software described under Data Acquisition and Reporting Software to generate periodic reports as required for plant operations and for regulatory compliance. The data acquisition function shall take priority over the report generation function and shall not be interrupted by the generation of reports.

The DAS shall log emissions and CEMS data as 1 minute averages. Other additional averaging periods may be used and logged as required.

The computer, keyboard, printer, CRT, and other peripherals will be located in the scrubber control room. The entire DAS shall be rack mounted in a cabinet. The DAS cabinet shall

include power supply outlets for the equipment located within the cabinet. Cabling between the CEMS DAS and the system controllers shall be furnished by the Contractor. Cable lengths shall be 200 meters. Unit prices shall be used to adjust the distances between the two locations. The Contractor shall furnish all prefabricated cabling required between the DAS computer and peripheral devices. One 120 volt ac power feed will be furnished from the Purchaser's essential service system. The CEMS DAS cabinet size shall be limited to a maximum of 0,762 m (30 inches) by 0,762 m (30 inches) by 1,98 m (78 inches).

The computer shall be an X (minimum X MHz) microprocessor based IBM compatible personal computer. The computer shall be provided with eight expansion slots to accommodate future modifications. Internal memory shall consist of at least X MB RAM with a minimum X MB hard disk drive. The hard disk drive shall have sufficient capacity to perform all data substitution routines required under 40 CFR 75 without accessing other data storage media. A second minimum X MB hard disk drive shall be included to provide data "mirroring." One 3-1/2 inch floppy disk drive and one CD-RW drive shall be provided. A X MB streaming tape drive shall be provided for data archival and routine backup.

The data acquisition system shall be designed such that a failure of the CPU, the storage disk, or any other data system device shall not result in the loss of any previously stored CEM data. The computer shall be designed to sustain memory in the event of a power supply failure.

An internal crystal controlled clock shall be furnished. This clock shall have battery backup to maintain correct time and date in the event of a power failure.

A SVGA color monitor shall be provided to display on-line emissions data and other CEMS data as specified.

The DAS shall be furnished with two 56k baud telephone modems. One modem shall provide an interface to the Contractor's facility to allow automated modem transfer of emissions reports to regulatory agencies and remote programming and trouble-shooting from the factory. The second modem shall be utilized by the Purchaser to access CEMS DAS information from a remote location. The Contractor shall be responsible for all communications software and hardware required to implement the modem communication links.

A X printer shall be provided for log and report printout. The printer shall be mounted in the DAS equipment rack. Interconnecting cable between the printer and the DAS computer shall be provided.

The printer shall be capable of printing in red and black

2B.5.3 Data Acquisition and Reporting Software. The Contractor shall furnish data acquisition and reporting software for the CEM DAS to collect, store, and provide access to

CEM data; provide system diagnostics; log alarms; and generate periodic emissions reports as required by EPA and by state and local pollution control agencies.

The Contractor shall be responsible to ensure that the reports are as required by EU Directive No.2001/80/EC, 40 CFR 60 Subpart Da, 40 CFR 75 in final form, and other state and local regulations). The software shall be capable of using selectable user-defined report formats to generate emissions and CEMS performance reports as required for plant operations. All report formats shall be programmed such that the Purchaser can modify them without changes to the software code.

The menus included in the software shall be expandable to accommodate the addition of future routines or reports without modification of the existing program. The software shall be assembled into blocks as subroutines so that new reports and calculations may be added in the future without modification of the existing software.

Reports shall display hourly and daily emissions averages; 6 minute and rolling averages; 30 day rolling averages (updated daily); calibration reports; bias adjustment factors; CEMS equipment alarm and status logs; CEMS availability data; data substitution databases; fuel; values of emissions products as ppmv, mg/Nm^3, and kg/h; percent opacity; summary emissions in tons/day and year-to-date tons for SO2, NOx, and CO2; and other data as specified by the regulatory agencies. Reports shall also display reason codes for noncompliance events and operator action codes.

The reporting software shall be capable of generating any of the periodic reports at the operator's request without interruption of ongoing data collection. The software shall permit the report to be output either to the report printer or to an ASCII file on CD or diskette. The dates to be included in the report shall be selectable when the report is requested. The reports shall use the most up-to-date information from the database of emissions data stored in the computer.

Real-time and historical graphical trending displays and reports shall be provided which display up to six monitored parameters over time. Parameters to be displayed, first and second y-axis scaling, display period, and graph titles shall be user selectable. The software shall allow up to 10 graphs to be predefined for ease of retrieval by the operator.

A means of predefining reason codes for violation and operator action for easy selection by the operator shall be provided. Up to 10 user defined reason codes shall be selectable from each of three code types: source, control equipment, and CEM equipment. One reason code from each of the code types shall be an "Other" code, which shall actuate a comment window and allow the user to enter up to 500 characters of text.

The software shall allow for the editing of any and all data labels, reason codes, action codes, alarm set point values, and fuel analysis values by the operator through the keyboard without changes to the software code.

Data signal from the backup analyzer or monitor shall be substituted for the primary signal upon failure of the primary signal to meet calibration, loss of signal, or any other abnormalities. Data substitution shall be on individual signal basis and complete substitution of all data from the redundant system is not allowed unless all primary signals have failed. All such secondary data shall be automatically "flagged" as such in all reports that are generated which include such data.

Separate calibration check functions shall be included in the system design to allow manual initiation of the calibration for either analyzer train associated with the chimney. This calibration will be used as a check of the system for maintenance purposes only. Data from these calibrations shall not be recognized by the DAS for reporting requirements. This function shall be independent of a manually initiated calibration function for which the results are recognized for reporting requirements.

The CEMS DAS shall alarm and log the following:

NOx emissions high.

SO2 emissions high.

CO2 concentration low.

Opacity high.

CEMS trouble alarms.

Gas analyzer calibration in progress (one for each analyzer provided).

Gas analyzer out of calibration (one for each analyzer provided).

Opacity calibration in progress.

Opacity system trouble.

Flow monitor calibration.

Flow monitor trouble.

Heat trace trouble.

Sample trouble.

Software shall accommodate field programming changes of each alarm set point. All alarms generated in the DAS computer shall be directed to the system controller for interface with the Purchaser's equipment.

The source code or configuration files and all compilers for the user configurable portion of the data acquisition and reporting software shall be furnished. The documentation accompanying the source code or configuration files shall be sufficient to provide an understanding of the programming and logic and identify the purpose of each routine.

TABLE 2B-1
CHIMNEY EMISSION/OPACITY CONTROLLER
INPUTS AND OUTPUTS - MINIMUM REQUIREMENTS

Signal	Units	Type	Purpose
	Analog Inputs by Contractor		
SO2 - High (8)	ppmv (1)	(3)	Data
SO2 - Low (8)	ppmv (1)	(3)	Data
NOx - Low (8)	ppmv (1)	(3)	Data
NOx - High (8)	ppmv (1)	(3)	Data
CO2 (8)	percent (1)	(3)	Data
Flue Gas Flow (8)	(2)	(3)	Data
Flue Gas Temperature	°C	(3)	Data
Flue Gas Static Pressure	kPa	(3)	Data
Opacity - ID Fan 1A	percent	(3)	Data
Opacity - ID Fan 1B	percent	(3)	Data
System Vacuum	kPa	(3)	Alarm
Enclosure Temperature	°C	(3)	Alarm
	Analog Inputs by Purchaser		
Unit Load	MW	4-20 mA	Data
Fuel Flow	kg/h	4-20 mA	Data
ID Fan 1A Motor Amps	amps	4-20 mA	Data
ID Fan 1B Motor Amps	amps	4-20 mA	Data
Scrubber Reaction Tank 1A Ph Level	ph	4-20 mA	Data
Scrubber Reaction Tank 1B Ph Level	ph	4-20 mA	Data
Scrubber Reaction Tank 1C Ph Level	ph	4-20 mA	Data
	Digital Inputs by Contractor		
SO2 Analyzer Trouble	(4) (8)		Alarm
NOx Analyzer Trouble	(4) (8)		Alarm
CO2 Analyzer Trouble	(4) (8)		Alarm
Opacity Monitor A Trouble	(4)		Alarm
Flow Monitor Trouble	(4)		Alarm
Flow Monitor Blowback Status	(4)		Alarm
Opacity Monitor B Trouble	(4)		Alarm

TABLE 2B-1 (Continued)
CHIMNEY EMISSION/OPACITY CONTROLLER
INPUTS AND OUTPUTS - MINIMUM REQUIREMENTS

Signal	Units	Type	Purpose
Digital Inputs by Purchaser			
Unit Running		Contact	Data
ID Fan 1A Off		Contact	Data
ID Fan 1B Off		Contact	Data
ID Fan 1A Low Speed		Contact	Data
ID Fan 1B Low Speed		Contact	Data
ID Fan 1A High Speed		Contact	Data
ID Fan 1B High Speed		Contact	Data
Digital Outputs to Purchaser's Equipment (7)			
Data Logger Trouble - Primary			Alarm
Data Logger Trouble - Backup			Alarm
SO2 Analyzer Trouble - Primary			Alarm
SO2 Analyzer Trouble - Backup			Alarm
NOx Analyzer Trouble - Primary			Alarm
NOx Analyzer Trouble - Backup			Alarm
CO2 Analyzer Trouble - Primary			Alarm
CO2 Analyzer Trouble - Backup			Alarm
Opacity Monitor A - Trouble			Alarm
Opacity Monitor B - Trouble			Alarm
Flow Monitor Trouble - Primary			Alarm
Flow Monitor Trouble - Backup			Alarm
Flow Monitor Blockback Status			Alarm

All equipment malfunctions that could possibly impact analyzer performance shall be alarmed individually. These shall include but are not limited to the following alarms:

Air Conditioner Failure - Primary and Backup
Power Supply Failure
Sampling/Conditioning Equipment Trouble
Calibration Failure

TABLE 2B-1 (Continued)
CHIMNEY EMISSION/OPACITY CONTROLLER
INPUTS AND OUTPUTS - MINIMUM REQUIREMENTS

Signal	Units	Type	Purpose
	Analog Outputs to Purchaser's Equipment		
SO2 (8)	ppmv (5)	4-20 mA	DCIS
SO2 (8)	kg/h (5)	4-20 mA	DCIS
SO2 (8)	mg/Nm^3 (5)	4-20 mA	DCIS
NOx (8)	kg/h (5)	4-20 mA	DCIS
NOx (8)	mg/Nm^3 (5)	4-20 mA	DCIS
CO2 (8)	percent (6)	4-20 mA	DCIS
Flue Gas Flow (8)	Nm^3/h	4-20 mA	DCIS
Flue Gas Temperature	°C	4-20 mA	DCIS
Opacity (Individual)	percent	4-20 mA	DCIS
Calculated Total Unit Opacity	percent	4-20 mA	DCIS

Notes:
(1)Uncorrected, diluted concentration.
(2)Signal units as required by Contractor's design.
(3)Signal type as required by Contractor's design.
(4)All available trouble alarms to be input separately.
(5)Corrected for dilution ratio, calibration factors, bias factors, and stack pressure; corrected to 12 percent CO2.
(6)Corrected for dilution ratio, calibration factors, bias factors, and stack pressure.
(7)All available trouble alarms to be output separately.
(8)Primary and redundant analyzers.

TABLE 2B-2 (USE IF APPLICABLE)
FLUE GAS WET SCRUBBER SO2 CONTROLLER
INPUTS AND OUTPUTS - MINIMUM REQUIREMENTS

Signal	Units	Type	Purpose
	Analog Inputs by Contractor		
Inlet SO2 - North	ppmv (1)	(3)	Data
Inlet SO2 - South	ppmv (1)	(3)	Data
Inlet CO2 - North	ppmv (1)	(3)	Data
Inlet CO2 - South	percent (1)	(3)	Data
Module 1A Outlet SO2	ppmv (1)	(3)	Data
Module 1B Outlet SO2	ppmv (1)	(3)	Data
Module 1C Outlet SO2	ppmv (1)	(3)	Data
Module 1A Outlet CO2	percent (1)	(3)	Data
Module 1B Outlet CO2	percent (1)	(3)	Data
Module 1C Outlet CO2	percent (1)	(3)	Data
System Vacuum	kPa	(3)	Alarm
Enclosure Temperature	°C	(3)	Alarm
	Analog Inputs by Purchaser		
Unit Load	MW	4-20 mA	Data
Fuel Flow	kg/h	4-20 mA	Data
	Digital Inputs by Contractor		
Inlet SO2 Analyzer Trouble (4)			Alarm
Inlet CO2 Analyzer Trouble (4)			Alarm
Module 1A Outlet SO2 Analyzer Trouble (4)			Alarm
Module 1B Outlet SO2 Analyzer Trouble (4)			Alarm
Module 1C Outlet SO2 Analyzer Trouble (4)			Alarm
Module 1A Outlet CO2 Analyzer Trouble (4)			Alarm
Module 1B Outlet CO2 Analyzer Trouble (4)			Alarm
Module 1C Outlet CO2 Analyzer Trouble (4)			Alarm
	Digital Inputs by Purchaser		
None			

TABLE 2B-2 (Continued)
FLUE GAS WET SCRUBBER SO2 CONTROLLER
INPUTS AND OUTPUTS - MINIMUM REQUIREMENTS

Signal	Units	Type	Purpose
Digital Outputs to Purchaser's Equipment (7)			
Data Logger Trouble			Alarm
Inlet SO2 Analyzer Trouble			Alarm
Inlet CO2 Analyzer Trouble			Alarm
Module 1A SO2 Analyzer Trouble			Alarm
Module 1B SO2 Analyzer Trouble			Alarm
Module 1C SO2 Analyzer Trouble			Alarm
Module 1A CO2 Analyzer Trouble			Alarm
Module 1B CO2 Analyzer Trouble			Alarm
Module 1C CO2 Analyzer Trouble			Alarm

All equipment malfunctions that could possibly impact analyzer performance shall be alarmed individually. These shall include but are not limited to the following alarms:

Air Conditioner Trouble
Power Supply Failure
Sampling/Conditioning Equipment Trouble
Calibration Failure

Analog Outputs to Purchaser's Equipment			
Inlet SO2	ppmv (5)	4-20 mA	DCIS
Inlet SO2	mg/Nm^3 (5)	4-20 mA	DCIS
Inlet CO2	percent (6)	4-20 mA	DCIS
Module 1A Outlet SO2	ppmv (5)	4-20 mA	DCIS
Module 1A Outlet SO2	mg/Nm^3 (5)	4-20 mA	DCIS
Module 1B Outlet SO2	ppmv (5)	4-20 mA	DCIS
Module 1B Outlet SO2	mg/Nm^3 (5)	4-20 mA	DCIS
Module 1C Outlet SO2	ppmv (5)	4-20 mA	DCIS
Module 1C Outlet SO2	mg/Nm^3 (5)	4-20 mA	DCIS
Module 1A Outlet CO2	percent (6)	4-20 mA	DCIS
Module 1B Outlet CO2	percent (6)	4-20 mA	DCIS
Module 1C Outlet CO2	percent (6)	4-20 mA	DCIS

TABLE 2B-2 (Continued)
FLUE GAS WET SCRUBBER SO2 CONTROLLER
INPUTS AND OUTPUTS - MINIMUM REQUIREMENTS

Notes:
(1)Uncorrected, diluted concentration.
(2)Signal units as required by Contractor's design.
(3)Signal type as required by Contractor's design.
(4)All available trouble alarms to be input separately.
(5)Corrected for dilution ratio, calibration factors, bias factors, and stack pressure; corrected to 12 percent CO2.
(6)Corrected for dilution ratio, calibration factors, bias factors, and stack pressure.
(7)All available trouble alarms to be output separately.

TABLE 2B-3 (USE IF APPLICABLE)
SCR INLET AND OUTLET NOx/CO2 CONTROLLER
INPUTS AND OUTPUTS - MINIMUM REQUIREMENTS

Signal	Units	Type	Purpose
	Analog Inputs by Contractor		
Inlet NOx	ppmv	(3)	Data
Inlet CO2	percent	(3)	Data
Outlet NOx	ppmv	(3)	Data
Outlet Co2	percent	(3)	Data
System Vacuum	kPa	(3)	Alarm
Enclosure Temperature	°C	(3)	Alarm
	Analog Inputs by Purchaser		
Unit Load	MW	4-20 mA	Data
Fuel Flow	kg/h	4-20 mA	Data
	Digital Inputs by Contractor		
Inlet NOx Analyzer Trouble (4)			Alarm
Outlet NOx Analyzer Trouble (4)			Alarm
Inlet CO2 Analyzer Trouble (4)			Alarm
Outlet CO2 Analyzer Trouble (4)			Alarm
	Digital Inputs by Purchaser		
None			
	Digital Outputs to Purchaser's Equipment		
Inlet NOx Analyzer Trouble			Alarm
Inlet CO2 Analyzer Trouble			Alarm
Outlet NOx Analyzer Trouble			Alarm
Outlet CO2 Analyzer Trouble			Alarm

All equipment malfunctions that could possibly impact analyzer performance shall be alarmed individually. These shall include but are not limited to the following alarms:

Air Conditioner Failure
Power Supply Failure
Sampling/Conditioning Equipment Failure
Calibration Failure

TABLE 2B-3 (Continued)
SCR INLET AND OUTLET NOx/CO2 CONTROLLER
INPUTS AND OUTPUTS - MINIMUM REQUIREMENTS

Signal	Units	Type	Purpose
	Analog Outputs to Purchaser's Equipment		
Inlet NOx	ppmv	4-20 mA	DCIS
Inlet CO2	percent	4-20 mA	DCIS
Outlet NOx	ppmv	4-20 mA	DCIS
Outlet CO2	percent	4-20 mA	DCIS

Notes:
(1)Uncorrected, diluted concentration.
(2)Signal units as required by Contractor's design.
(3)Signal type as required by Contractor's design.
(4)All available trouble alarms to be input separately.
(5)Corrected for dilution ratio, calibration factors, bias factors, and stack pressure; corrected to 12 percent CO2.
(6)Corrected for dilution ratio, calibration factors, bias factors, and stack pressure.
(7)All available trouble alarms to be output separately.

2B.6 CERTIFICATION AND FIELD TESTING. The Contractor shall provide factory certification of the instruments for those design and performance parameters designated by the EPA in the 40 CFR 60 Appendix B Performance Specifications and the 40 CFR 75 Appendix A Specifications and EU Directive No.2001/80/EC. The Contractor shall provide those field services required to guarantee and demonstrate onsite operational performance characteristics as required for completion and documentation of the field testing as required by the Appendix B Performance Specifications.

The Contractor shall employ an independent testing contractor, acceptable to the Purchaser, to conduct a field performance test on the emissions monitoring system to assure that equipment and systems furnished meet the relative accuracy requirements of Appendix B Performance Specifications of 40 CFR 60 and the requirements of 40 CFR 75 Appendix A and EU Directive No.2001/80/EC. The Contractor shall have a representative onsite during all phases of the certification testing. Copies of all original test data sheets shall be provided to the Purchaser or his representative immediately following all test runs.

If required as part of the performance testing, the Contractor shall perform velocity traverses of the ducts, in accordance with Appendix A Reference Methods of 40 CFR 60, at the installation locations of the monitors to establish the average velocities in the ducts for the given unit loads. This data will be used to assure that each monitor, as installed and aligned, will produce an accurate representation of the average duct emissions at the various unit load conditions.

Prior to completion of the performance testing, the Contractor shall be responsible for supervising the alignment and positioning of the monitors and analyzers before the tests and shall be responsible for supervising any required relocation or realignment of the analyzers and monitors during or after the tests. The erection procedures, as specified in Section 1A, shall describe the alignment procedure in detail.

All test instruments and personnel required shall be furnished by the Contractor and by the independent contractor, who shall perform the reference method tests for the relative accuracy certifications tests. Test instruments shall be calibrated by the Contractor prior to the test. Documentation of instrument calibration and tests shall be provided and actual testing may be witnessed by the Purchaser or his designated representative.

All personnel and/or subcontractors associated with certification and field testing shall be mutually acceptable to the Purchaser and the Contractor.

The Contractor shall be responsible for preparation of the Certification Report to be submitted to the Romanian Environmental Protection Agency.

Should the test results indicate failure of the equipment to meet all of the above specified performance requirements, the equipment and systems shall be modified as required to enable them to meet the requirements without additional cost to the Purchaser.

After modification of the equipment and systems to correct deficiencies, the equipment and systems shall be retested without cost to the Purchaser to demonstrate that the specified performance requirements are fulfilled.

If the equipment does not pass the certification requirements within 6 months after initial operation, the Purchaser shall retain the option of requiring the Contractor to remove the equipment from the site and refund all money paid by the Purchaser within 2 months from Purchaser's written notification exercising option. The 6 month time period will be extended to account for inability to perform certification tests due to boiler unavailability.

Approximately 1 year after successful completion of the initial Romanian Environmental Protection Agency certification test, the Contractor shall conduct a second certification test. This second certification test shall be conducted in the same manner as described in this article for the initial certification test. The cost of this second test shall be included in the lump sum contract price.

The contract base price shall be based upon the chimney monitors and the scrubber inlet monitors being certified. A deduct price shall be provided for deleting the certification of the inlet SO2 analyzers and providing certification services for using as-fired fuel analysis for the reporting system.

2B.7 SYSTEM GUARANTEES. The Contractor shall guarantee that at no time during the first 365 days of operation after performance certification for the chimney emissions monitoring systems shall the individual availability of either the primary or secondary CEM system to comply with all reporting requirements be less than 95 percent.

The Contractor shall guarantee that the emissions monitoring systems shall meet all requirements including but not limited to relative accuracy, calibration, and drift requirements given in EU Directive No.2001/80/EC and 40 CFR 60 Appendix B Performance Specifications 1, 2, 3, 4, and 6 and in 40 CFR 75 Appendix A in the final regulations and shall, at no additional cost, make all necessary equipment, hardware, and software modifications to meet the final regulations within 60 days of promulgation.

The Purchaser will properly maintain the emissions monitoring equipment as directed in the Contractor's instruction manuals. The Contractor shall provide a tabular listing of all maintenance activities required to maintain the equipment in accordance with this requirement. Performance audits in accordance with Appendix F of 40 CFR 60 and 40 CFR 75 Appendix B will be conducted by the Purchaser quarterly up to and including the first annual performance certification test after successful initial performance certification by

the Contractor. If the system fails an audit, the Contractor shall make all necessary repairs and adjustments to the equipment at his expense. If the Contractor is required to make any changes or corrections, the warranties covered under Contract Regulations titled General Conditions will be extended by a period of time equal to that incurred between the negative and positive field tests. In addition, the Contractor shall perform an audit retest at no cost to the Purchaser.

The Contractor will be notified 10 working days in advance of each performance audit so he may, at his expense, witness the performance audit.

2B.8 FACTORY DEMONSTRATION. All CEM systems to be provided shall be fully factory assembled and tested to demonstrate full compliance with the operational requirements of this specification. The demonstration testing shall show that the system is fully functional and that the software and controllers are properly set up to control the system. This testing shall include, but not be limited to, demonstration of calibration function, data substitution, automatic blowback of probes (if required), alarm points, data collection and retention, sample report creation, and demonstration of primary and backup DAS units (computer and DSM control units) to be fully integrated to provide automatic primary and backup DAS functions required. The calibration function demonstration shall include a 7 day calibration drift test to be completed prior to the other witness tests.

The Purchaser and/or his representative shall retain the right to witness all final demonstration testing of each CEM system. The Contractor shall notify the Purchaser of the specific test date for each system between 15 to 20 working days prior to the specific test. The Purchaser, at his sole option, may waive the right to witness the demonstration test.

2B.9 PLANT SITE PERSONNEL TRAINING. The Contractor shall conduct onsite training sessions for the Purchaser's site personnel in the use, operation, and maintenance of the hardware and software comprising the flue gas monitoring system. The Contractor shall provide all materials for these training courses. The instructors for the courses shall include system design engineers directly associated with the project and who are intimately familiar with the details of the Unit 2 flue gas monitoring system.

Two 4 day classes shall be provided. The Contractor shall provide material for 20 persons in each class.

The first class shall primarily focus on the analyzers, sampling equipment, controllers, and monitors. The second class shall be on the DAS system including hardware, software, and reporting functions.

2B.10 TECHNICAL SERVICES. The lump sum price shall include the days and round trips required in Section 1A for technical services. This technical service time will be used at the discretion of the Purchaser. Technical personnel furnished will be used for field supervision to ensure proper installation and calibration of equipment by the Purchaser's

installing contractor prior to field testing and to direct startup and initial checkout of the system.

2B.11 OPTIONAL MAINTENANCE CONTRACT. The proposal shall indicate the price for furnishing as an option a complete yearly maintenance contract for all equipment furnished under this section. The maintenance contract shall include, as a minimum, four quarterly scheduled visits to each jobsite for routine maintenance and any required emergency maintenance visits to each jobsite within 24 hours after notification by the Purchaser. The cost of all replacement parts and labor shall be included in the maintenance contract. The contract shall cover all required servicing for the equipment other than routine operating checks. If more frequent maintenance visits are required by the equipment, the bidder shall so state in his proposal and shall include these visits in the maintenance contract. The price for annual renewal of the maintenance contract for a second year shall also be stated. The maintenance contract shall include all updates to the DAS software which may be developed after expiration of the system warranty. The price for annual renewal of the maintenance contract for 5 years shall be provided.

Section 3 – INSTALLATION AND CONSTRUCTION

3A.1 TRANSMITTER MECHANICAL INSTALLATION. The mechanical installation to be performed shall include the complete piping, tubing, racks, mounting, connection, and testing of the transmitters specified in the Transmitter Device List contained in Section 2A. All mechanical installation shall be done by workmen experienced in this type of work and in accordance with the equipment manufacturer's recommendations and the Contractor's mechanical installation drawings.

This Section of the specification is intended to provide the Contractor with some of the specific requirements for instrumentation installation. It is not intended to provide the Contractor with an exhaustive list of all furnish and install requirements. The Contractor is fully responsible to completely design, furnish, and install the transmitters specified in the Transmitter Device List.

3A.1.1 Piping and Tubing Installation. The Contractor shall furnish and install all piping and tubing for each instrument as required in Section 2A.4.1.

The Contractor shall furnish and install all blowdown valves, shutoff valves, tees, piping, tubing, fittings, brackets, and other miscellaneous hardware necessary to install the instruments per the Contractor's mechanical installation design.

For transmitters specified as "New" in the Transmitter Device List, where sensing tubing and piping does not currently exist, the Contractor shall also furnish and install all instrument piping and tubing from the process connection shutoff valve to each transmitter.

Special tools shall be used for all bending and forming operations and when cutting tubing. All tubing ends shall be deburred following cutting. Tubing shall be carefully handled to avoid flat spots, kinks, and short bends. Any tubing so damaged shall be replaced. All piping and tubing shall be air blown after erection and before attachment to equipment at either end.

The Contractor shall furnish and install all required piping and tubing supports, in accordance the Contractor's mechanical installation design.

3A.1.2 Racks Installation, Mounting, and Connection. The Contractor shall furnish and install all instrument racks and mounting accessories required for the installation of the transmitters, shall mount all transmitters, and shall connect each transmitter to the process.

Transmitters defined as "New" in the Transmitter Device List shall be mounted on new instrument racks. The Contractor shall not mount "New" transmitters to any existing equipment or structure. The Contractor shall furnish and install the instrument racks, and all mounting hardware, brackets, and supports required to mount the transmitters on the new racks.

For transmitters defined as "Replacement" transmitters, the Contractor may reuse the existing mounting supports and/or racks where the construction of the "Replacement" transmitters allow. The Contractor shall furnish and install any additional mounting hardware, brackets, and supports required to use the existing mounting support and/or rack. If the existing

mounting support or rack is not usable for a "Replacement" transmitter, the Contractor shall furnish and install a new instrument rack, and all mounting hardware, brackets, and supports required to mount the transmitters on the new rack.

The Contractor shall furnish and install all materials and services necessary, and shall fabricate all new pipe racks. One and two instrument racks are acceptable and shall be fabricated in accordance with the Field Device Process Detail Drawings at the end of this Section. Pipe racks shall steel pipe. Pipe racks shall be 2 inch Schedule 40 minimum with a steel plate baseplate welded to the pipe. Baseplates shall be anchored to the floor or grating. Anchoring or supporting on equipment, equipment bases, piping, pipe supports, and other similar materials will not be permitted. Steel shall be primed and finished with two coats of light gray enamel paint before instruments are installed. All necessary grout, supports, and miscellaneous material required for a complete installation of the equipment shall be furnished and installed by the Contractor

3A.1.3 Testing. The Contractor shall test all new piping and tubing installed under this specification. The tests shall be performed prior to connecting the instrument to the manifold fitting. All work shall be performed in accordance with ANSI B 1.1-Unified screw threads; ASME B 31.1 –Power Piping; ANSI B 1.20.1- Pipe threads; ASME SEC.IX – Qualification standard for welding and brazing; ASME SEC.V- Non destructive examination; ASME – American Society for testing and materials.

All labor and material costs including actual testing, and supply, fabrication, and installation of temporary piping, tubing, and testing equipment, and also all labor and material for the repair of defects found during testing, shall be the responsibility of the Contractor.

Following the testing by the Contractor, the equipment will be tested by the Purchaser to demonstrate its ability to operate under the conditions set forth herein. If the tests indicate that the equipment fails to operate under the conditions set forth herein, the Contractor shall make modifications to correct the operation as part of this specification.

3A.2 TRANSMITTER ELECTRICAL INSTALLATION. The electrical installation to be performed shall include the complete raceway system, cabling, conductor termination, and testing for all transmitters specified in the Transmitter Device List. All electrical installation shall be done by workmen experienced in this type of work and in accordance with the recommendations of the equipment manufacturer and the Contractor's transmitter electrical installation design drawings.

This Section of the specification is intended to provide the Contractor with some of the specific requirements for electrical installation. It is not intended to provide the Contractor with an exhaustive list of all Contractor furnish and install requirements. The Contractor is fully responsible to design, furnish, and install, complete, the electrical installation for the transmitters specified in the Transmitter Device List.

3A.2.1 Raceway System Installation. The Contractor shall furnish and install all raceway required for each instrument per the Contractor's electrical installation design as required in Section 2A.4.2. The raceway system is defined to include conduit, flexible conduit, continuous rigid cable supports called "cable tray" herein, cable tray covers, wireway,

cabinets and boxes, and all materials and devices required to install, support, secure, and provide a complete system for support and protection of electrical cables.

3A.2.1.1 Raceway General. The installation of the raceway system shall conform to the following general requirements:

- All raceway routing shall be acceptable to the Purchaser. Raceway that is installed without the approval of the Purchaser, and for which the routing is not acceptable to the Purchaser, shall be removed and re-installed by the Contractor at the expense of the Contractor. Re-installation includes re-pulling and re-terminating cables as necessary.
- The Contractor shall coordinate the location of raceway and raceway supports with other equipment and structures. Raceway shall be routed so the lowest part, including supports and appurtenances, is at least 2 meters above the closest floor or walking surface beneath it, except where it is changing elevation or being lowered to enter equipment.
- Raceway and raceway supports shall be located at least 300 mm from the final outside surface of all steam piping, including insulation, and 150 mm from the final outside surface of all other insulated piping.
- Raceway and raceway supports shall be located so they do not interfere with equipment which expands, vibrates, or moves under normal operation.
- Expansion anchors shall be used to attach raceway supports to overhead concrete surfaces. Raceway supports attached to concrete floors shall be elevated and grouted approximately 25 mm above the finished floor to prevent corrosion caused by exposure to standing water.
- Raceway supports shall be secured to building steel by welding or by drilling and tapping.
- Raceway shall not be attached to grating.
- Penetrations through walls and roofing must be made in locations and in a manner acceptable to the Purchaser. All penetrations made by the Contractor must be sealed in a manner acceptable to the Purchaser.
- Extensions of building structures to support raceway shall be of the same material as the structure being extended and shall be finished to match the finish of the extended structure.
- Beam clamps for attachment of hanger rods to structural steel beams shall be electrogalvanized steel and shall be provided with safety beam anchor straps. Swivels shall be provided where required to prevent bends in the hanger rods.
- Galvanized surfaces which are removed or damaged by cutting, drilling, or any other operation shall be regalvanized using galvanizing spray.

3A.2.1.2 Cable Tray. The installation of cable tray shall conform to the following general requirements:

- The cable tray system shall include all cable tray, fittings, supports, covers and materials for a full installation.
- Cable tray shall be ladder type construction, except when matching existing cable tray of a different construction in an area.

- Solid bottom type construction shall be of a fabricated metal structure with no bottom openings. Tray splice plates shall be high-pressure rigid plate type, connected to the side rails by bolting with bolts designed to prevent rotation during tightening of the nuts.
- For all types of tray installation, nuts shall be flanged serrated lock nuts, lock nuts with serrated washers, or lock nuts with captive washers. Bolt, nut, and washer material shall be as stainless steel. All other hardware and accessories are of the same material as the tray.
- The Contractor shall cut the trays to length as required. The trays shall be cut with saws and all surfaces over which the conductors and cables will be laid shall be ground or filed to remove any sharp edges which could cause damage to the cable jacket or insulation either during installation or in normal service. Areas on which the galvanizing is removed shall be repaired using galvanizing spray.
- Support cross members and bracket supports shall be assembled from strut materials hot-dip galvanized after fabrication.
- Clamps, fastening hardware, and pins shall be corrosion-resistant metal acceptable to the Purchaser. All steel accessories not of stainless steel shall be hot-dip galvanized after fabrication.
- Covers shall be installed on all vertical cable tray and cable tray installed under grating, after cable pulling through the tray is complete. Immediately before installing covers, all debris shall be removed from the tray and the tray vacuumed clean. Joint plates, or acceptable equal, shall be used at all cover joints and at locations where tray covers stop, to prevent the covers from buckling or bowing into the tray. Tray covers shall be secured to the tray using the manufacturer's recommended tray cover clips or clamps. In addition to the clips, at least one bolted connection or screwed connection shall be used on each cover section on vertical tray to prevent the covers from sliding down the tray.
- Where required, tray covers shall be cut or notched to provide clearance around clamps, conduits, and cables as required for proper fit. Cover shall be saw cut. The cut edges shall be filed smooth and re-galvanized. Cover edges which are in contact with cable shall be covered with grommet material.
- All cable tray installed by the Contractor shall be permanently identified by the Contractor in a manner acceptable to the Purchaser.

3A.2.1.3 Conduit. The installation of conduit shall conform to the following general requirements:

- The conduit system shall include all conduit, pull boxes, junction boxes, fittings, supports, and materials for a full installation.
- Metal conduit, couplings, and elbows shall be hot-dip galvanized rigid steel. The conduit interior and exterior surfaces shall have a continuous zinc coating with a transparent overcoat of enamel, lacquer, or zinc chromate.
- Nonmetallic conduit shall be high impact, polyvinyl chloride and shall be used with plastic conduit fittings. Each length of conduit shall be furnished with one standard coupling. Joints shall be made with solvent

cement. All additional conduit couplings, factory bends, plastic-to-steel conduit adapters, solvent cement, and special fittings for the complete conduit system shall be included. Couplings shall have a center stop to ensure proper seating.

- Each length of threaded conduit shall be complete with a coupling on one end and a thread protector on the other. The thread protector shall have sufficient mechanical strength to protect the threads during normal handling and storage.
- Galvanized iron or galvanized steel fittings shall be used with steel conduit. Zinc coated steel fittings shall be used with steel tubing. Electrical metallic tubing fittings shall be compression type, approved for raintight application. All fittings for aluminum conduit shall be copper free aluminum or aluminum alloy.
- A run of conduit shall not contain more than the equivalent of four quarter bends, including those immediately at outlets or fittings. Bends on conduit or tubing shall be made without reducing the internal diameter of the conduit. The use of a pipe tee or vise for bending conduit or tubing will not be permitted. The inside radius of conduit bends shall be not less than six times the inside diameter of the conduit.
- The plane of all conduit ends shall be square with the center line. Where threads are required, they shall be cut and cleaned prior to conduit reaming. The ends of all conduit and tubing shall be reamed to remove all rough edges and burrs. All steel conduit, after threading, shall be re-galvanized with galvanizing spray.
- All conduit installed by the Contractor shall be permanently identified by the Contractor in a manner acceptable to the Purchaser.

3A.2.2 <u>Cable Installation and Termination</u>. The Contractor shall furnish and install cable and terminations for each instrument per the Contractor's electrical installation design as required in Section 2A.4.2. Cable and terminations are defined to include insulated cable, conductors, and conductor termination accessories as needed to provide a complete installation.

3A.2.2.1 Cable Installation. The installation of cable shall conform to the following general requirements:

- Cable installation shall be defined to include placement, support, coiling and taping of spare conductors, and identification of each circuit and cable. Splicing of conductors shall not be permitted unless Contractor obtains prior approval from Purchaser.
- All cable in tray shall be carefully laid in or pulled through the tray system so that neither the cable nor the trays are damaged. Cable may be laid along the side of the tray system during placement provided it is protected from dirt, water, oil, or other detrimental materials and from mechanical injury. Cable shall be cut sufficiently long to conform to the contour of the trays, with particular attention paid to vertical inside bends. All excessive slack shall be removed from the cable so that it lies parallel to the sides of the trays.

- Multiple cables bound together by the Contractor to form a bundle for easy installation shall be separated after installation. The cables shall be laid flat and straight in the cable tray to minimize tray area used.
- The cable shall be tied to the trays with nylon ties at 3 meter intervals to hold it in place. Additional cable ties shall be installed in all vertical fittings to ensure that the cable follows the contour of the tray. Cable ties shall be installed at each end of vertical fittings and at a minimum of two intermediate points.
- All spare conductors of a multi-conductor cable shall be left at their maximum lengths for possible use as replacement of other conductors in the cable. Each spare conductor shall be neatly coiled and then taped to the conductors being used.
- All cable installed by the Contractor shall be permanently identified by the Contractor in a manner acceptable to the Purchaser.

3A.2.2.2 Termination. The termination of cable conductors shall conform to the following general requirements:

- Termination of a conductor shall be defined to include attaching the conductor at its designated location, including the use of accessories such as connectors, insulating materials, support grips, markers, and cable ties.
- Terminal connectors shall be pre-insulated, ring lug, compression type connectors properly sized for the conductor and the terminal. The interior surface of the connector wire barrel shall be serrated, and the exterior surface of the connector wire barrel shall be provided with crimp guides. Pre-insulated terminal connectors shall have a vinyl insulating sleeve, color coded to indicate conductor size.
- Crimping tools used to secure conductors in compression type connectors or terminal lugs shall be those made for that purpose and for the conductor sizes involved. The crimping tools shall accurately crimp the connector barrel and shall accurately crimp the conductor insulation support sleeve if provided. Crimping tools shall be a product of the connector manufacturer or shall be as recommended by the connector manufacturer and acceptable to the Purchaser for use with the connectors.
- No splices shall be made in conductors for instrument circuits or control circuits without specific acceptance by the Purchaser. Splices shall be acceptable for connections to accessory devices equipped with factory installed pigtails or where high temperature wire is necessary to connect to a particular device.

3A.2.2.3 Testing. The Contractor shall electrically test all cables installed under this specification after placement. All cable testing activities shall be completed prior to commencement of startup and turnover activities.

All testing equipment, all labor and material costs for the supply, installation, and removal of the testing equipment, and also all labor and material for the repair of defects found during testing, shall be the responsibility of the Contractor.

All circuits shall be tested with the circuit complete except for connections to equipment, and any circuit failing to test satisfactorily shall be replaced or repaired and then re-tested.

3A.2.2.3.1 Continuity and Identification Testing. All insulated conductors shall be tested for continuity and conductor identification. Continuity tests shall include all tests necessary to confirm that each conductor is continuous throughout its entire length. Identification tests shall include all tests necessary to confirm that the conductor being investigated originates and terminates at the locations designated in the Circuit List.

3A.2.2.3.1 Insulation Testing. Conductor insulation resistance shall be measured with a 1000 volt megger or an equivalent testing device. Insulation resistance measurements shall be made between each conductor and ground and between each conductor and all other conductors of the same circuit. Minimum acceptable resistance values shall be 500 megohms.

3A.3 INSULATION, FREEZE PROTECTION, AND PROCESS HEAT TRACING INSTALLATION. The insulation, freeze protection, and process heat tracing installation to be performed shall include the complete installation of insulation and jacketing, and the complete installation and testing of freeze protection and process heat tracing for all piping and tubing for the transmitters specified in the Transmitter Device List. All installation shall be done by workmen experienced in this type of work and in accordance with the recommendations of the equipment manufacturer and the Contractor's insulation, freeze protection, and process heat tracing installation detailed design drawings.

This Section of the specification is intended to provide the Contractor with some of the specific requirements for instrumentation piping and tubing insulation, freeze protection, and process heat tracing installation. It is not intended to provide the Contractor with an exhaustive list of all Contractor furnish and install requirements. The Contractor is fully responsible to design, furnish, and install, complete, the piping and tubing insulation, freeze protection, and process heat tracing for all transmitters specified in the Transmitter Device List.

All equipment and structures shall be adequately protected from damage due to insulation materials. After completion of the work, all equipment and structures shall be cleaned, repaired, and restored to their original state.

3A.3.1 Insulation and Jacketing Installation. The Contractor shall furnish and install all piping and tubing insulation and jacketing materials for each instrument per the Contractor's detailed design as required in Section 2A.4.3.

All miscellaneous materials required for complete field installation of insulation and jackets shall be furnished and installed under these specifications. This shall include but not be limited to such items as insulating and finishing cements, sealers, plastic insulation materials, moisture barrier materials, wire, straps, bands, insulation lugs and special supports, pins, clips, meshes, jacket attachment screws, and neoprene washers.

It is anticipated that some of the existing insulation adjacent to new work may be damaged to a condition requiring repairs to achieve a durable finished job. The Contractor shall furnish original installation type materials, and shall patch such damage as a part of this specification.

3A.3.1.1 Insulation. The installation of insulation shall conform to the following general requirements:

- Insulation shall not be applied over damp, wet, or frosted surfaces. All surfaces to be insulated shall be clean and dry prior to application of the insulation and all testing on the piping shall have been completed.
- Preformed pipe insulation shall be used on piping and tubing systems and shall be hollow cylindrical shapes split in half lengthwise or curved segments.
- Insulation shall completely fill all spaces. Cracks, voids, and depressions shall be filled with insulating cement suitable for the piping temperature. The surfaces shall be smooth and uniform before application of outer coverings.
- Double thickness insulation shall be applied with the longitudinal and circumferential joints of the two layers staggered. Each layer shall be separately wired or strapped as described above and all cracks, voids, and depressions shall be filled in the first layer before application of the outer layer.
- Ends of pipe insulation shall be stopped a sufficient distance from flanges to permit bolt removal clearance.
- Insulation on bends shall be cut into sections sufficiently short to form a reasonably smooth exterior. After the insulation is in place, it shall be coated as required with insulating cement to form a smooth surface.
- Elbows may be insulated as described above or may be insulated by means of specially molded insulating enclosures.
- Joints in insulation shall be designed with provisions for expansion to prevent damage to the insulation. Expansion spaces shall be of sufficient gap and provided in sufficient number to absorb the expansion and contraction movements of the piping and tubing. Expansion spaces shall be tightly packed with compressible mineral fiber wool insulation. Expansion spaces on double layer insulation shall be staggered.
- The Contractor shall enlarge all grating penetrations as required to allow for pipe and tubing insulation and full thermal movement of the pipe and tubing.
- When existing facilities will interfere with equipment insulation, including allowance for the expected movement of insulated piping and tubing and adjacent piping systems during plant operation, the insulation shall be cut back and the lagging shall be modified to avoid contact with the existing facilities. Existing facilities shall include, but not necessarily be limited to, piping, electrical conduit and cable tray, buildings and structures components, sleeves, handrail, grating, and plant equipment. All such modifications to insulation and lagging shall be done only with the prior consent of the Purchaser and shall be performed at no additional cost.

3A.3.1.2 Insulation Jacketing. The installation of insulation jacketing shall conform to the following general requirements:

- All piping and tubing insulation shall be completely covered with jackets so there is no exposed insulation.

- Exposed ends of piping and tubing insulation shall be provided with flat covers attached by a rolled seam.
- All jacket material shall be smooth sheet plain finished or shall have a stucco embossed finish to match existing lagging. Jacketing sheets shall be machine rolled and formed to accurately fit insulation curvatures.
- All insulated standard radius bends and elbows shall be jacketed with preformed smooth elbow jackets.
- All insulated long radius bends shall be jacketed using spiral wrapped strips or individual mitered segment gores cut to fit the insulation shapes applied in either instance over a continuous freshly applied coating of aluminum pigmented mastic. Jacketing strips shall be attached using screws.
- Joints in insulation jacketing shall be designed with provisions for expansion to prevent damage to the insulation. Expansion spaces shall be of sufficient gap and provided in sufficient number to absorb the expansion and contraction movements of the piping and tubing. Jacketing joints shall be lapped and sealed with nonsetting cement, or shall be provided with self-sealing bands or other acceptable provision made which will absorb the relative jacket movement.

3A.3.2 Freeze Protection and Process Heat Tracing Installation. The Contractor shall furnish and install freeze protection and process heat tracing materials for each instrument per the Contractor's detailed design as required in Section 2A.4.3.

All miscellaneous materials required for complete field installation of freeze protection and process heat tracing shall be furnished and installed under these specifications.

3A.3.2.1 Freeze Protection and Process Heat Tracing Equipment. The Contractor shall furnish and install all of the components for a complete freeze protection and process heat tracing system. This shall include but not be limited to the quantity of each type of heat tracing cable, termination kits, thermostats, transformers, instrument freeze protection enclosures, miscellaneous hardware, adhesive tape, and other items as required for the complete installation.

The installation of freeze protection and process heat tracing shall conform to the following general requirements:

- The Contractor perform a continuity test on each coil of heat tracing cable immediately upon its receipt from the supplier to verify that the parallel conductors are continuous throughout the length of the cable.
- The heat tracing cable shall be cut to length at the project site to meet the requirements of the pipelines and equipment as installed. Circuit lengths shall not exceed the manufacturer's recommendations.
- The heat tracing cable shall be installed as indicated on the drawings and in accordance with the manufacturer's recommendations.
- Allowance for pipeline thermal expansion shall not be provided by forming loops in the heat tracing cable. A normal installation will contain sufficient irregularities to allow for expansion between attachment bands.

3A.3.2.2 Freeze Protection and Process Heat Tracing Electrical. The Contractor shall furnish and install all of the components for a complete freeze protection and process heat tracing electrical system. This shall include but not be limited to transformers and panelboards, raceway system and cable, miscellaneous hardware, and other items as required for a complete electrical installation.

A raceway system shall be included for all power feeds from the freeze protection and process heat tracing power panels to individual heat trace circuits. This shall include all tray and rigid and flexible conduit, including fittings and supports. The raceway system installation shall also conform to all of the requirements as specified in Section 2.B.2.1

Cable shall be included for all freeze protection control and power conductors. This shall include power cables to the freeze protection transformers, cables between the transformer and the freeze protection panelboards, and cables from the panelboards to individual heat trace circuits. The Contractor shall also make all required cable terminations. The cable and terminations shall also conform to all of the requirements as specified in Section 2.B.2.2

3A.3.2.2 Freeze Protection and Process Heat Tracing Testing . The Contractor shall test all new freeze protection and process heat tracing installed under this specification.

The Contractor shall perform tests on the heat tracing cables after installation to verify that the cable was not damaged during installation and to provide information to the Purchaser for future reference. Tests shall be performed after attachment of the heat tracing cable but prior to application of thermal insulation, and final testing shall be repeated after insulation has been applied. The tests shall as a minimum verify that none of the heat tracing cable conductors are shorted to another conductor, to the protected pipeline or equipment, or to ground, and shall measure the resistance between cable conductors.

If the tests performed prior to application of the insulation indicate that the cable has been damaged, the Contractor shall repair or replace the cable until the installation tests acceptably. If the tests performed after the application of insulation indicate that the cable has been damaged, the Contractor shall repair or replace the heat tracing cable and pipe and tubing insulation until the installation tests acceptably.

All labor and material costs including actual testing, and supply and installation of temporary testing equipment, and also all labor and material for the repair of defects found during testing, shall be the responsibility of the Contractor.

The Contractor shall prepare complete reports of the results of all heat tracing cable tests and measurements. The reports shall include, as a minimum, the date of each group of tests, identification of the cable being tested, a description of any cable damage detected and the corrective action taken, and the measured value of resistance.

Following the final testing by the Contractor, the equipment will be tested by the Purchaser to demonstrate its ability to operate under the conditions set forth herein. If the tests indicate that the equipment fails to operate under the conditions set forth herein, the Contractor shall make modifications to correct the operation as part of this specification.

3A.4 As-Built Drawings. The Contractor shall maintain one full size set of all mechanical, electrical, and freeze protection/process heat tracing construction drawings in his central

office at the jobsite as an as-built set. This as-built set shall contain all marks necessary to locate and identify any installations that are not completed in accordance with the drawings. These drawings shall be updated weekly to agree with the actual field installation. At the completion of construction activities, the contractor shall electronically update the revised drawings to reflect all as-built marks. The Contractor's electronically updated as-built drawings shall be turned over to the Purchaser after as-built updates are completed.

NOTES:

1. INSTRUMENT STAND TO BE GALVANIZED.
2. COLD SPRAY GALVANIZE ANY REPAIR AFFECTED AREAS TO PROTECT AGAINST CORROSION.
3. WHENEVER POSSIBLE THE STANDS SHOULD BE WELDED TO STEEL OR GROUTED TO CONCRETE.
4. STAND HEIGHT IS TYPICALLY 1.25m.
5. SUPPORT AS REQUIRED TO MINIMIZE STAND VIBRATION
6. ARC WELDING CONSTRUCTION
7. INSTRUMENT STAND MAY BE INSTALLED ON EITHER CONCRETE FLOOR OR ON PLATFORM GRATING.
8. MINIMUM OF TWO (2) GUSSETS REQUIRED.

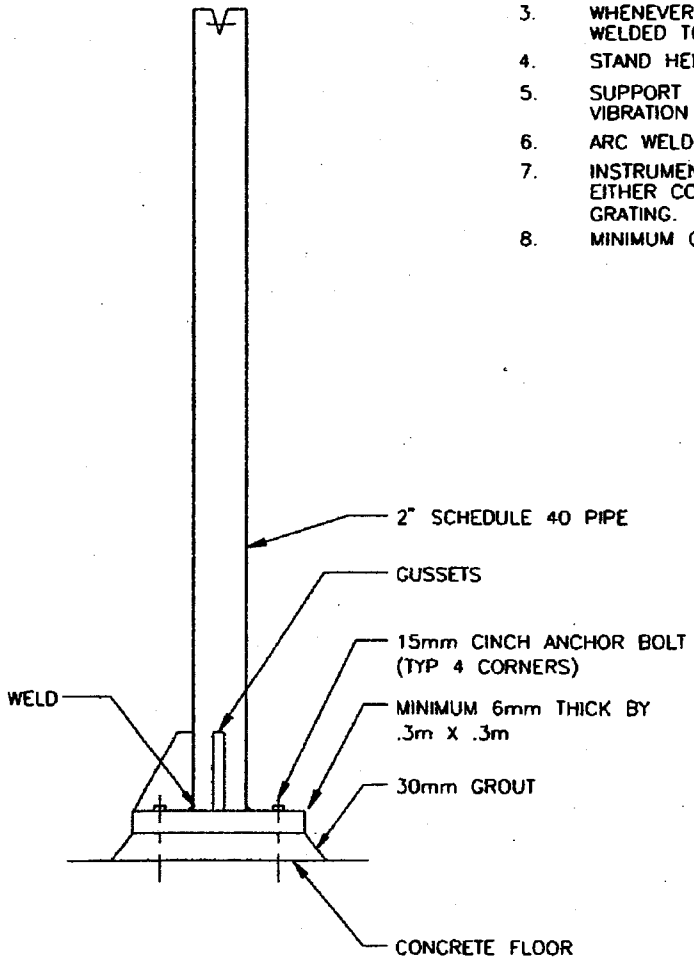

INSTRUMENT STAND DETAIL
NOT TO SCALE

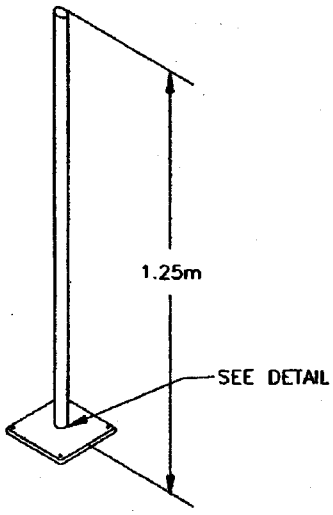

FLOOR MOUNT (ONE INSTRUMENT)

INSTRUMENT RACK FABRICATION

0	4/04/06	INITIAL ISSUE		JRF	SEM		
NO	DATE	REVISIONS AND RECORD OF ISSUE	DRN	DES	CHK	PDE	APP

BLACK & VEATCH CORPORATION

ENGINEER JRF | DRAWN SEM
CHECKED | DATE 4/04/06

ELCEN

PROJECT DRAWING NUMBER: 140364-DK-1454A | REV 0

FIELD DEVICE PROCESS DETAILS
INSTRUMENT RACK (ONE INSTRUMENT)

CODE
AREA

NOTES:

1. INSTRUMENT STAND TO BE GALVANIZED.
2. COLD SPRAY GALVANIZE ANY REPAIR AFFECTED AREAS TO PROTECT AGAINST CORROSION.
3. WHENEVER POSSIBLE THE STANDS SHOULD BE WELDED TO STEEL OR GROUTED TO CONCRETE.
4. STAND HEIGHT IS TYPICALLY 1.25m.
5. SUPPORT AS REQUIRED TO MINIMIZE STAND VIBRATION
6. ARC WELDING CONSTRUCTION
7. INSTRUMENT STAND MAY BE INSTALLED ON EITHER CONCRETE FLOOR OR ON PLATFORM GRATING.
8. MINIMUM OF TWO (2) GUSSETS REQUIRED.

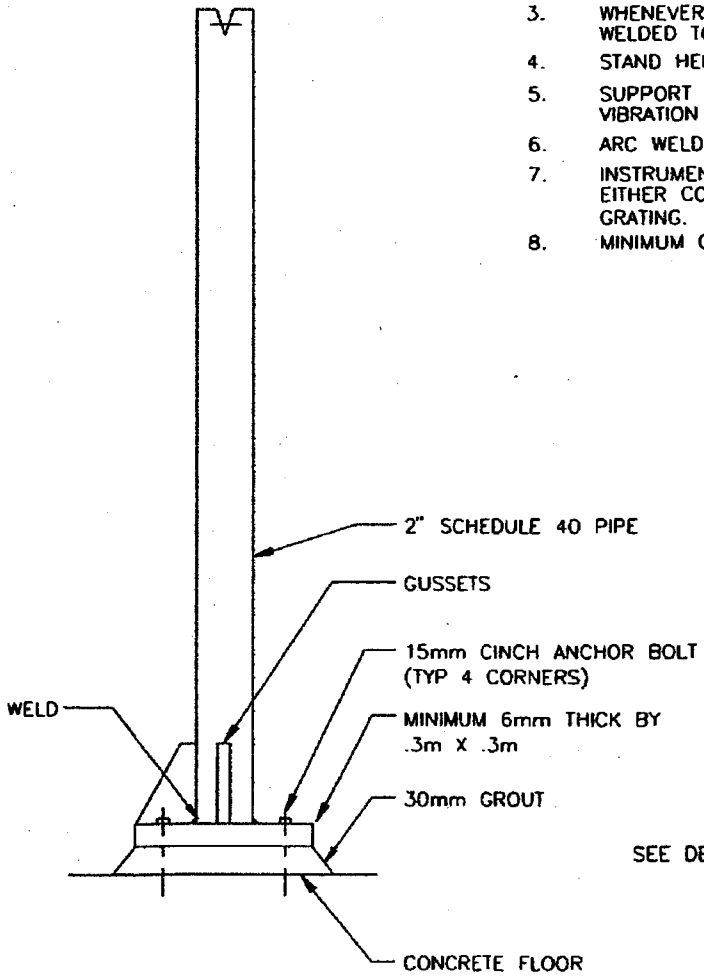

INSTRUMENT STAND DETAIL
NOT TO SCALE

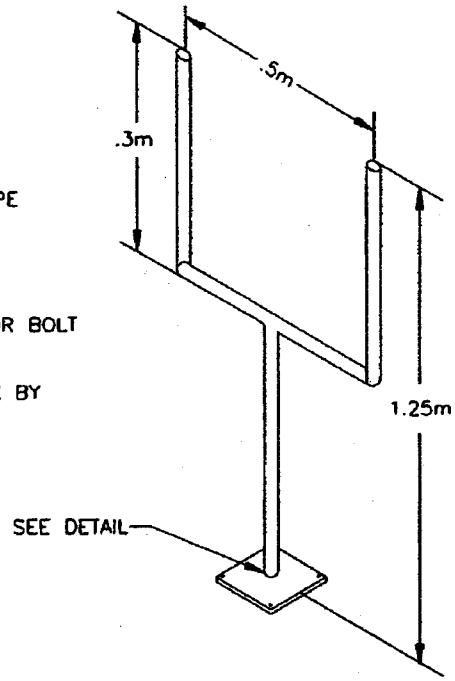

FLOOR MOUNT (TWO INSTRUMENT)

INSTRUMENT RACK FABRICATION

BLACK & VEATCH CORPORATION								
ENGINEER JRF	DRAWN SEM							
CHECKED	DATE 4/04/06	0	4/04/06	INITIAL ISSUE		JRF	SEM	
		NO	DATE	REVISIONS AND RECORD OF ISSUE	DRN	DES	CHK	PDE	APP

ELCEN	PROJECT DRAWING NUMBER 140364-DK-1454B	REV 0
FIELD DEVICE PROCESS DETAILS INSTRUMENT RACK (TWO INSTRUMENT)	CODE / AREA	

FINANCIAL PROPOSAL

ELCEN

GENERATING PLANT NAME & UNIT NUMBER

CONTINUOUS EMISSION MONITORING SYSTEM

RFP NO.
PROJECT

BID ISSUE
(REV 0)

building a world of difference™ | BLACK & VEATCH

FP - COST PROPOSAL

FP.1 TOTAL FIRM PRICE. Contractor shall provide a total firm price for all materials, labor and services covered by under the base proposal. All prices shall be specified in Euro.

TOTAL FIRM PRICE _____

FP.2 PRICE BREAKDOWN. Contractor shall provide a price breakdown as follows for all items included in the base and optional scope of service. All prices shall be specified in Euro.

Item	Price
Stack mounted CEMS equipment materials, instrumentation, and other hardware.	
Software license fee (if applicable)	
Shipping	
Installation	
On-Site Engineering/Startup Services	
On-Site Testing and Reporting	
On-Site Training	
Other Services (describe) a) b) c) d)	
Total Man-Days in On-Site Engineering/Startup Services	Man-Days
Total Man-Days in On-Site Training	Man-Days

FP.3 LABOR RATES. Contractor shall provide a labor rates by position applicable to the project. All rates shall be specified in Euro per man-hour. All expenses shall be at actual cost.

Position	Straight Time	Overtime	Sundays & Holidays
Project Manager			
Project Engineer			
Engineer			
Field Installation Supervisor			
Field – Mechanical Installation Personnel			
Field – Electrical Installation Personnel			
Field – Instrumentation Technical Personnel			
Permitting Specialist			
IT Specialist			

Position	Straight Time	Overtime	Sundays & Holidays
Administrative Support			
Contractors Field Technical Services Personnel			
Other (As defined by the Contractor)			

FP.4 EXCEPTIONS TO THE SPECIFICATION. The Contractor shall certify that he agrees to all provisions of the Specification and Bid Documents and clearly list any exceptions under the title of EXECPTIONS in the Proposal. Bidder's terms and conditions are not considered specific exceptions. If exceptions are taken, identify the page(s) of the proposal that apply.

FP.5 SUBCONTRACTORS. This bid is based upon the use of the following subcontractors:

Trade	Subcontractor

All technical requirements and all commercial terms and requirements must be followed by all subcontractors as well as by the Contractor.

SIGNATURE OF BIDDER

Corporation Name: _____

By Authorized Person: _____

Title: _____

Business Address: _____

SPECIFICATIONS
AND
DOCUMENTS

ELCEN

GENERATING PLANT NAME

HANDHELD ELECTRONIC DATA LOGGER

RFP NO. _____
PROJECT_____

BID ISSUE
(REV 0)

building a world of difference™ | BLACK & VEATCH

TABLE OF CONTENTS

	Page
A - GENERAL INFORMATION	
A.1 INSTRUCTIONS TO BIDDERS	A-1
A.2 RIGHT TO REJECT	A-1
A.3 VALIDITY	A-1
A.4 PROJECT PROCEDURES	A-1
A.4.1 Correspondence	A-1
A.4.2 Project Team	A-1
A.4.3 Scope Change Document	A-1
A.4.4 Invoicing	A-1
A.4.5 Warranty	A-2
A.4.6 Performance Guarantee	A-2
A.4.7 Acceptance Documentation	A-2
A.4.8 Insurance	A-3
B – BID DATA	
B.1 GENERAL	B-1
B.2 HANDHELD ELECTRONIC DATA LOGGER DATA	B-1
Section 1A – SCOPE OF WORK	
1A.1 GENERAL	1A-1
1A.2 WORK INCLUDED UNDER THIS SPECIFICATION	1A-1
1A.2.1 Miscellaneous Materials and Services	1A-1
1A.3 WORK NOT INCLUDED UNDER THIS SPECIFICATION-	1A-1
1A.4 WORK INCUDED AS OPTIONS UNDER THIS SPECIFICATION-	1A-2
1A.5 CONTRACTOR'S SERVICES	1A-2
1A.5.1 Submittal of Engineering Data	1A-2
1A.5.2 Contractor's Field Technical Services	1A-2
1A.5.3 Implementation Conference	1A-2
1A.6 LANGUAGE, NUMBERS, AND SYMBOLS	1A-3
Section 1B – DESIGN DATA AND DRAWINGS	
1B.1 GENERAL	1B-1
1B.2 CORRESPONDENCE	1B-1
1B.3 REVIEW OF ENGINEERING DATA	1B-1
1B.4 DESIGN DATA	1B-1
1B.5 DRAWINGS & OTHER CONTRACTOR PREPARED MATERIALS	1B-2
1B.5.1 Drawing & Material Submittal	1B-2
1B.5.2 Final Markup Drawings & Materials	1B-2
1B.6 INSTRUCTION MANUALS/DOCUMENTATION	1B-2

Section 1C– SCHEDULE

1C.1 GENERAL	1C-1
1C.2 SCHEDULE	1C-1
1C.3 PRELIMINARY SCHEDULE	1C-1
1C.4 CONTRACTOR'S DETAILED SCHEDULE	1C-1

Section 1D – OTHER REQUIREMENTS

1D.1 GENERAL	1D-1
1D.2 REFERENCED STANDARDS	1D-1
1D.2.1 List of References	1D-2
1D.3 MATERIALS	1D-2
1D.4 IDENTIFICATION	1D-2
1D.5 SHIPMENTS	1D-2
1D.6 SHIPPING NOTICE	1D-3
1D.7 MATERIALS LIST	1D-3
1D.8 CORRECTION OF ERRORS	1D-3
1D.9 QUALITY ASSURANCE	1D-3

Section 2A – TECHNICAL REQUIREMENTS

2A.1 GENERAL INTENTION	2A-1
2A.2 INPUT DESCRIPTIONS	2A-1
2A.3 GENERAL SOFTWARE REQUIREMENTS	2A-1
2A.4 GENERAL HARDWARE REQUIREMENTS	2A-2
2A.5 INSTRUMENTATION	2A-2
2A.6 CONTROL POWER	2A-2
2A.7 TRAINING	2A-2
2A.8 TECHNICAL SUPPORT	2A-2
2A.8.1 Telephone Support	2A-2
2A.8.2 On-Site Support	2A-2

Section 3A – INSTALLATION AND CONSTRUCTION Not Used

A. GENERAL INFORMATION

A.1 INSTRUCTIONS TO BIDDERS. The Contractor shall provide a complete proposal detailing but not necessarily limited to a description of the services, exceptions and/or clarifications to the proposal, fees, rate structures, and terms and conditions which will govern the project. The Contractor will provide a description of the work package. THE PROPOSAL SHALL INCLUDE THE ESTIMATED MAN-HOURS AND ASSOCIATED COSTS FOR THE PROJECT; THE COSTS SHALL BE CONSIDERED AS FIRM PRICE, WITH NO INCREASES BEING ALLOWED EXCEPT FOR AUTHORIZED CHANGED IN THE SCOPE OF WORK.

A.2 RIGHT TO REJECT. The right is reserved by ELCEN to reject any or all proposals. In addition, ELCEN may elect to cancel the project if it is determined necessary by ELCEN or if funding is not available.

A.3 VALIDITY. Bidder's proposal shall remain valid for a period of _____ ( ) days commencing on the proposal date.

A.4 PROJECT PROCEDURES. The following items and services shall be furnished as optional work under this specification:

A.4.1 Correspondence. All correspondence and documents from the Contractor to ELCEN during the proposal process shall be addressed to:

Type name and address of ELCEN contacts here.

After award, a formal distribution list for letters, transmittals, etc. will be created.

A.4.2 Project Team. The Contractor shall have a dedicated Project Manager responsible for the coordination of all project related activities. The Project Manager identified for this project by the Contractor shall remain in that position throughout the project. Any changes in this key position shall be with the approval of ELCEN.

The Contractor shall include resumes of personnel who would be assigned to the project, project team organization, job descriptions, project experience, and other information that is considered pertinent.

ELCEN reserves the right to request personnel changes if performance/experience becomes an issue.

A.4.3 Scope Change Document . For any modified scope changes or additions to the Contractor work, the Contractor will provide written notification per the contract procedure. ELCEN reserves the right to have any extra work performed on a firm price, not-to-exceed or cost-plus basis. The Contractor will submit with his proposal a complete rate structure applicable to any work to be performed under this agreement.

The Scope Change Document shall describe the reason for change, the person who requested the change, the original scope and man-hour cost, and the new scope and man-hour cost.

Each Scope Change Document shall be consecutively numbered. Any effects on the engineering schedule and overall project schedule shall be described. **WRITTEN APPROVAL FROM ELCEN IS REQUIRED BEFORE PROCEEDING WITH THE SCOPE CHANGE.**

A.4.4 Invoicing. The Contractor's proposal is to include a description of their invoicing procedures. ELCEN will issue a purchase order to the selected Contractor. Invoices not complete in reference or lacking in backup information will be rejected.

Progress and/or milestone based payments will be made in an amount equal to _____ (___) percent of Work completed with the balance being retainage.

Final payment will be made upon completion and acceptance of the work. Retainage will be paid after all submittals have been received and accepted following final payment.

A.4.5 Warranty. The Contractor shall provide a warranty on all the hardware, software and services rendered to ensure that the Fuel Quality Impact Software meets the following requirements:

Be free from defects in design, material, workmanship and title;

Be of the kind, quality and capability designated or described in the Contract;

Perform in the manner set forth in or required by the Contract; and

Have been produced processed, delivered and sold or licensed in conformity with all applicable federal, state and local laws, administrative regulations and orders. The Contractor shall execute, certify and deliver to ELCEN any documents as may be required to effect or evidence compliance with such federal, state and local laws.

Except for consumable items, the warranty period shall be _____.

During the warranty period, the Contractor shall provide free of charge telephone support for ELCEN users and remote support for Software imperfections.

A.4.6 Performance Guarantee. The performance guarantee shall be in the form of a bank letter of credit for 10% of the contract value, valid until receipt and approval of the Acceptance Documentation; or by retention of 10% of the amount of each invoice, retention to be paid upon receipt and approval of the Acceptance Documentation. If in the form of a bank letter of credit, the performance guarantee should be issued by a bank in Romania, or by a bank abroad with a correspondent in Romania.

A.4.7 Acceptance Documentation. The Contractors shall provide to the Purchaser the Acceptance Documentation (at the end of executions works, at the end of commissioning, at the end of the guarantee period) in accordance with the Romanian legislation in force.

A.4.8 Insurance. The Contractor shall provide full insurance of all software, hardware, etc, against losses or damages during execution, transportation, storage, testing, and commissioning.

B - BID DATA

B.1 GENERAL. Each Bidder shall submit complete and definitive information on his proposal offering in sufficient detail to permit a complete technical analysis of the Proposal.

The requirements for information contained in this Section are basic. Additional information shall be provided as requested by the Purchaser.

The scope of supplementary information and equipment data requested herein shall be included in the Proposal to the fullest extent possible at the time of bid submittal. As a minimum, sufficient proposal data shall be submitted to demonstrate compliance with this specification, and to allow a comprehensive evaluation of the bid. Proposals lacking sufficient data to satisfy these requirements will be considered non-responsive. The successful Bidder shall complete all data submittal requests and Proposal data entries for inclusion in the Purchase Order documents prior to the Award of Contract.

B.2 HANDHELD ELECTRONIC DATA LOGGER DATA. Submit Data required on the following pages. Where options are indicated in the PROPOSAL FORM or BID DATA, provide complete information for each option.

Entries on the BID DATA forms shall be entered electronically in the MS Word file contained on the CD-ROM or diskette included with this specification. A hardcopy of the BID DATA will be included with each proposal. Electronic copies of the BID DATA file will be provided along with the required numbers of proposals.

Electronic copies of the files may be submitted by CD-ROMs or 3.5 inch diskette. Electronic copies submitted with the proposal will be virus checked and will be certified to be virus free.

REQUIREMENT DESCRIPTION	CONTRACTOR RESPONSE
GENERAL	
Describe the typical system implementation strategy.	
Describe in detail the assistance you will need from the Purchaser's staff in the installation and implementation of the complete system. What are the tasks the plant staff must perform in the data gathering, parametric testing, electronic log sheet development and initial installation of the hardware and software? Include an estimate of hours per week involvement by plant staff.	
Detail the terms under which source code will be made available for exclusive purpose of self-maintaining the system / supporting software.	
How much on-site support time will you provide during system installation and tuning in preparation for on-line operation? Describe and identify the make-up of the optimal project team including individual skill sets.	
Describe your on-going support (e.g., Help Desk, hot line, newsletters, user groups, internet, e-mail, etc.). Describe your procedure for problem resolution. What are the lead time requirements and criteria for on-site technical support?	
Would you use third party contractors or subcontractor for any of the services required under the specification? If so, for what parts of the project?	
Purchaser may make modification to plant equipment. Describe how the proposed tools can support modification of existing data logs and development of new data logs including adding, deleting, reordering data input fields.	
What is the nature of outside help needed by plant staff to create new input logs or modify existing logs?	
What is the nature of outside help needed by plant staff to maintain the existing log sheets / software?	
What is the nature of outside help needed by plant staff to update the existing software? (i.e., new version release)	
Is there a User's Group. If yes, please indicate the number of members.	
Number of current users.	
Describe the overall system architecture including system size, redundancies, I/O quantity (if applicable), interfaces with other systems, UPS requirements / type (if applicable), backup requirements, list of equipment, etc.	

REQUIREMENT DESCRIPTION	CONTRACTOR RESPONSE
SYSTEM DESCRIPTION	
Describe the system and typical operation including all interfaces between hardware, software, and required third party tools.	
What network protocols are supported and / or required by proposed system (i.e. Ethernet, LAN, TCP/IP, etc.)	
What operating systems are supported (i.e. Windows NT, Windows XP, etc.)?	
List the minimum and recommended hardware requirements (by component) for the handheld electronic data loggers and other supporting hardware including. • Processor • RAM • Hard Drive Size • Monitor Size • Printer Requirements • Modem Requirements	
Does the proposed system support wireless LAN access points?	
Does the proposed system support use of barcode instrument identification tags for data entry?	
How many handheld electronic data loggers are included with the base proposal? Can additional handheld electronic data loggers be purchased?	
Can multiple electronic data loggers be used with a single electronic log sheet? If yes, how many?	
A single data logger should be capable of supporting multiple electronic log sheets? Logs may be developed based on equipment systems and/or relative location within the plant. Explain how the proposed system supports this?	
It is anticipated that each log will include a minimum of 20 data points. Is there a limit to the number of data points that can be included in a data log sheet, report, etc.?	

REQUIREMENT DESCRIPTION	CONTRACTOR RESPONSE
How is data entered into handheld electronic data logger?	
How is data stored on the electronic data logger?	
How much data can be typically stored on the electronic data logger?	
What type of long-term storage device is included with the electronic data logger or is or recommended for use with the handheld electronic data logger?	
How is data transferred from the handheld electronic data logger to the long-term storage device?	
What is the current software version number and release date? How often are software updates issued?	
What types of data inputs are supported by the software (i.e. pressure, temperature, flow, etc.)?	
Is data input range checking included to notify the operator of potentially erroneous entries or abnormal readings? If yes, describe.	
The Purchaser intends to enter data using SI units of measure. Does the software support SI?	
What languages are currently supported by the software?	
If not currently available, can a Romanian language version be developed?	
Describe the documentation that will be provided with the system.	
How are program and data errors identified and reported to the user?	
The Purchaser intends to access long-term data collected by the system for review, trend analysis, reporting, etc.? Explain how the system supports this function	
What other software tools are recommended or required for use with the proposed Handheld Electronic Data Logger?	
Can customized reports be developed by the user using third party tools such as Crystal Reports?	

REQUIREMENT DESCRIPTION	CONTRACTOR RESPONSE
OPTIONAL SERVICES	
Please describe any optional services which are recommended or can be provided on an as-needed basis including the following: • On-site training. • Data log development • Instrument bar code development • Program customization (input screens, databases, trending tools, reports, etc.)	

Section 1A - SCOPE OF WORK

1A.1 GENERAL. Cost prohibits the wiring of all process instruments to data historians. As a result, the plant staff relies on staff to perform periodic rounds to collect and review critical equipment operating data. Data collected on hand-written logs must be transposed to electronic form or stored as hardcopy. The Owner intends to streamline the manual data collection and storage process through the use of hand-held computers (data loggers) and electronic data sheets. Manually collected data will be uploaded to an information management system for long-term storage, data review/analysis, and reporting

This section covers the general description, scope of work, and supplementary requirements for the work included under this specification.

The work included under this specification shall be supplied FOB PLANT NAME, PLANT LOCATION

1A.2 WORK INCLUDED UNDER THIS SPECIFICATION. The work performed by the Contractor shall be to furnish hardware, software, and all required interface devices required to support operator rounds data acquisition using handheld electronic data loggers and long-term storage of data on a separate magnetic or optical storage device. Items or services to be quoted as options to the base bid are listed under WORK INCLUDED AS OPTIONS UNDER THIS SPECIFICATION.

All hardware, computer software and documentation shall be furnished by the Contractor as specified by the Purchaser in this specification.

1A.2.1 Miscellaneous Materials and Services. Miscellaneous materials and services not otherwise specifically called for shall be furnished by the Contractor in accordance with the following:

> All required third-party software with the exception of the Windows operating system software required to be installed on any existing Owner's workstation(s) or all third party software required for operation on any PC/server provided by the Supplier under this specification.

1A.3 WORK NOT INCLUDED UNDER THIS SPECIFICATION. The following items of work will be furnished by the Purchaser (unless furnished as part of optional work under WORK INCLUDED AS OPTIONS UNDER THIS SPECIFICATION):

> Construction and miscellaneous services and materials specified as furnished by the Purchaser.
>
> Supply and installation of electrical power and control wiring, conduit, junction boxes, network hubs, and other electrical enclosures not integral to equipment supplied by the Contractor.

Personnel to conduct parametric testing of system and supporting software based on Contractor's test plan.

1A.4 WORK INCLUDED AS OPTIONS UNDER THIS SPECIFICATION. The following items and services shall be furnished as optional work under this specification:

On-site training of staff in the installation and operation of the software on one or more designated workstations.

Development of unit specific log/data input files required to support operator rounds data collection.

Development of hardcopy log sheets, data analysis, or other customized output reports.

1A.5 CONTRACTOR'S SERVICES. The services called for in WORK INCLUDED UNDER THIS SPECIFICATION and the services inherent to any options purchased by the Purchaser as called for in WORK INCLUDED AS OPTIONS UNDER THIS SPECIFICATION shall be in accordance with the following.

1A.5.1 Submittal of Engineering Data. Hardware requirements, software inputs and other engineering data for the software are essential to the implementation of the entire project. The Contractor shall submit related engineering data in accordance with the schedule and requirements specified herein to assure compliance with the overall installation and operating schedule.

1A.5.2 Contractor's Field Technical Services. The Contractor shall furnish the services of one or more technical service representatives when requested by the Purchaser. The service representatives shall be technically competent and experienced in the installation and operation of the system, and authorized by the Contractor to perform the work stipulated. The Contractor's technical representative shall be responsible for all on-site work.

As part of the base scope of the work, the Contractor's technical service representatives shall provide periodic assistance and direction to the Purchaser and shall review the computer hardware and software setup with the Purchaser after installation and identify any recommended changes or adjustments to assure proper operation.

As an optional service, the Contractor's technical service representative shall be available to support software installation, data collection, model configuration, model calibration, and acceptance testing. The technical service representative shall instruct the plant personnel in the proper operation of the system.

1A.5.3 Implementation Conference. The Contractor's technical service representative shall attend an implementation conference at a time and place selected by the Purchaser to discuss matters relative to the execution of this Contract. The Contractor's technical service representative shall attend additional conferences as required by the Purchaser thereafter to expedite the work.

1A.6 LANGUAGE, NUMBERS, AND SYMBOLS.

All the documents of the offer and before signing the contract shall be in English. After signing the contract, all drawings, designs, specifications, manuals, operating instructions, statements, schedules, notices, documents, nameplates, and markings shall be in both the English and Romanian languages. All graphics developed by the Contractor shall be in the Romanian language. Windows operating system graphics may be supplied in English if a Romanian version is not available.

All units of measurement shall be stated in the SI - system. The Contractor shall further be required to employ in all drawings and submittals the same symbols and designations as are used by the Purchaser.

Section 1B – DESIGN DATA AND DRAWINGS

1B.1 GENERAL. This section stipulates the requirements for engineering data, software documentation, or other materials which the Contractor may submit for review.

1B.2 CORRESPONDENCE. Correspondence on all technical matters shall be addressed to the Purchaser as follows:

ELCEN
UTILITY ADDRESS

Attention: CONTACT NAME

Correspondence on all procedural and commercial matters shall be addressed to the Owner's Representative as follows:

ELCEN
UTILITY ADDRESS

Attention: ELCEN CONTACT NAME

Letters of transmittal shall accompany submittals of engineering data, software documentation or other materials and shall include a list of the items included in the transmittal. Correspondence shall be identified with the project name and plant name. Transmittal of drawings and data shall be as specified in the article entitled DRAWINGS & OTHER CONTRACTOR PREPARED MATERIALS.

1B.3 REVIEW OF ENGINEERING DATA. The Purchaser's review of engineering data will cover only general conformity of the data to the specifications and documents, external connections and interfaces with existing equipment. This review does not indicate a thorough review of all dimensions, quantities, and details of the equipment, material, device, or item indicated or the accuracy of the information submitted. This review shall not be construed as relieving the Contractor from any responsibility for errors or deviations from the requirements of the contract documents.

1B.4 DESIGN DATA. The following design data shall be submitted as scheduled in Section 1C, unless otherwise specified:

List of minimum and recommended hardware requirements.

Itemized list of software input requirements including fuel quality, equipment configuration, equipment performance, and economic variables.

1B.5 DRAWINGS & OTHER CONTRACTOR PREPARED MATERIALS. It is not anticipated that any Contractor-prepared drawings will be required for this project. However, any Contractor-prepared drawings or other Contractor prepared materials shall be sufficient detail to indicate the arrangement, description, operation or use of the materials for the information specifically requested in the submittal schedule specified in Section 1C.

1B.5.1 Drawing & Material Submittal. ____ (__) copies of the drawings and /or other contractor prepared materials shall be submitted to the Purchaser as follows:

_____copies to:
ELCEN
Address.

Attention. Contact

Markups reviewed by the Purchaser will be returned to the Contractor with corrections or exceptions clearly marked. The Contractor shall make the changes noted thereon and copies of the corrected drawings or data shall be submitted for review in the same manner as the original submittal.

When the drawings or other Contractor prepared materials are returned to Contractor with no corrections or exceptions noted the Contractor shall submit versions for final distribution as specified hereinafter under Final Markup Drawings and Contractor Prepared Materials..

No work shall be performed in connection with the installation of equipment, materials, computer hardware and software until the drawings and data have been reviewed by the Purchaser except at the Contractor's own risk and responsibility. Work may proceed on equipment, materials, computer hardware and software when the drawings and data therefore have been returned with no corrections or exceptions noted; or when drawings have been returned with corrections or exceptions noted, provided the work is performed in accordance with the Purchaser's notations.

If changes are made at the project site to the equipment to correct installation errors, due to design changes or wiring revisions, revised drawings indicating the changes made shall be prepared and submitted to the Purchaser..

1B.5.2 Final Markup Drawings & Materials. After receipt from the Purchaser of drawings or other Contractor prepared materials with no corrections or exceptions noted, the Contractor shall transmit _____ (__) copies to the Purchaser for final distribution.

1B.6 INSTRUCTION MANUALS/DOCUMENTATION. The Contractor shall furnish instruction manual and documentation bound in a binder suitable for long term rough usage. Front covers of the manuals shall be permanently marked with lettering indicating Owner's name, plant name, name of software and name of manufacturer.

The manuals shall include the following information specific to each version of the software supplied by the Contractor:

- Table of Contents and index tabs.
- Name, address, telephone number, and fax number of the local and national service representative and supplier and 24 hour emergency service contact.
- Specifications including minimum and recommended hardware requirements.
- Description of the software.
- Installation instructions.
- Operating instructions.
- Software troubleshooting guidelines.
- Data backup and recovery guidelines.

The above listed requirements are the minimum. Additional information that is necessary for proper installation, operation and utilization of the software shall also be included.

One copy of the instruction manual shall be submitted to the Purchaser for review. After the manual has been approved, the final ____( ) copies should be sent to the Owner.

Section 1C - SCHEDULE

1C.1 GENERAL. This section covers the schedule and scheduling requirements for performance and completion of the work included under this Contract.

1C.2 SCHEDULE. Milestone, payment and delivery schedules are defined below. The completion dates indicated are essential to the work under this Contract and to the coordination and continuity of other Purchaser work activities..

The listing of activities and dates is not intended to be a complete or detailed listing of all work under this Contract or of all interfaces with the work of other contractors.

It is understood and agreed that the dates shown within the Milestone and the Payment and Delivery Schedules are the latest feasible completion dates and that earlier dates may be attained as agreed to by the Purchaser and the Contractor.

Milestone	Date
Issue Request For Proposal	
Receive Bidder Responses to RFP Including Detailed Data Input Requirements	
Contract Award	
Software Installation	
Software Training	
(Optional) Log Sheet Development	
(Optional) Data Output Reports	

1C.3 PRELIMINARY SCHEDULE. The Contractor shall submit, as part of his proposal, a preliminary schedule of the work. This preliminary schedule shall include a bar chart showing all major activities. The Contractor shall also submit with his proposal a work plan, which describes the activities in sufficient detail to clearly show his understanding of the concentrated effort and coordination required to complete the work by the scheduled contract completion date.

1C.4 CONTRACTOR'S DETAILED SCHEDULE. Within 5 days after the date of contract award, the Contractor shall submit a detailed schedule. The detailed schedule shall be based upon the dates specified in the schedule included herein.

The detailed schedule shall be in bar graph form acceptable to the Purchaser.

The detailed schedule shall contain all activities of the plan, including acquisition of special equipment, materials, computer hardware, and computer software. For all equipment and materials supplied by the Contractor especially for this project, the schedule shall include the sequence of activities including issuance of purchase orders, preparation of drawing markups and delivery. Each activity shall be identified on the schedule by a descriptive title and shall be assigned an estimated number of working days required and an expected completion date.

Schedules returned to the Contractor for revision or correction shall be resubmitted for review within ____ calendar days. Upon acceptance by the Purchaser of the detailed schedule of activities, the Contractor will be responsible for maintaining such schedule.

Section 1D - OTHER REQUIREMENTS

1D.1 GENERAL. These requirements apply in general to all equipment, computer hardware, and software and are supplementary to the technical requirements. If requirements specified herein are in conflict with the requirements specified in the technical requirements, the technical requirements shall govern to the extent of such conflict.

The Contractor's proposal shall be based upon the use of equipment and materials complying fully with the requirements specified in this Section. It is recognized that the Contractor may have standardized on the use of certain components, materials, processes, or procedures different than those specified herein. Alternates in addition to the base proposal on the basis of supplying the Contractor's standard components, materials, processes, or procedures will be considered. The alternate proposal shall clearly stipulate the alternate proposed, the specific exceptions to the specification, and the price change applicable for supplying such alternate.

1D.2 REFERENCED STANDARDS. Reference to the standards of any technical society, organization, or association, or to the laws, ordinances, or codes of governmental authorities shall mean the latest standard, code, or specification adopted, published, and effective at the date of taking bids unless specifically stated otherwise in this specification.

The specifications, codes, and standards referenced in this specification (including addenda, amendments, and errata) shall govern in all cases where references thereto are made except where they conflict with this specification. In case of conflict between the referenced specifications, codes, or standards and this specification, the latter shall govern to the extent of such difference.

All engineered equipment manufactured under this specification and the associated engineering for the manufacture shall be in accordance with the codes and standards detailed in the specification sections and the following codes and standards.

For engineered equipment manufactured under this specification and the associated engineering for that engineered equipment, reference in these specifications is made to only USA standards, codes, and specifications, and the equipment, materials, and workmanship furnished under these specifications shall be in accordance with the standards, code, or specification designated. Equivalent standards, codes and specifications of other authorities will be considered when submitted to the Purchaser or Owner's Representative in the English language. If the proposed substitute standards, codes, or specifications are acceptable to the Purchaser and the Owner's Representative, their use will be authorized in writing. In the event the substitute standards, codes, or specifications are not acceptable, the work shall proceed in accordance with USA standards, codes, and specifications designated in the specifications.

All materials furnished and installation procedures used under this specification shall conform with accepted good engineering practice, the codes and standards detailed in the specification sections, and the requirements of the applicable Romanian standards.

1D.2.1 List of References. All engineered equipment, engineering, materials, and installation provided under this specification shall be in accordance with the following codes and standards.

Works	**In Accordance With**
Software Development & Testing	ISO 9001 Guidelines

1D.3 MATERIALS. Unless specifically provided otherwise in each case, all materials, equipment, computer hardware, and computer software furnished for permanent installation shall conform to applicable standard specifications and shall be new, unused, and undamaged.

1D.4 IDENTIFICATION. All shipping notices, computer hardware and software, and other documents pertaining to the equipment and materials furnished under this specification shall be identified as follows:

ELCEN
ADDRESS

Attention: CONTACT NAME

1D.5 SHIPMENTS. All shipments shall be F.O.B. destination, freight allowed.

The Contractor shall discuss with the Purchaser the routing of shipments and shall route the same as indicated by the Purchaser provided freight rates are no greater than by other routes. Shipments are accepted Monday through Friday from _____ a.m. to _____ p.m.

All shipments shall be delivered to:

ELCEN
PLANT ADDRESS

Attention: CONTACT NAME

The equipment shall be shipped boxed, crated, or otherwise protected against damage during shipment, handling, and storage at the Project Site. Openings shall be closed with caps, plugs, or other suitable closure devices suitable for rough usage. Packaging shall be suitable to prevent moisture or water damage during shipment and outdoor storage at the Project Site.

The shipping forms must include the following content:

- Fiscal bill (invoice);
- Shipping notice;
- Certificate of origin;
- Factory testing certificate;
- Quality and conformity certificate;
- Guarantee certificate;
- EUR certificate;
- Transport certificate;
- Import statement value;
- Insurance policy-"for all risks"

1D.6 SHIPPING NOTICE. The Contractor shall submit to the Purchaser duplicate copies of shipping notices describing each shipment of material, equipment, computer hardware, or software. Climate control requirements shall be included. The shipping notices shall be mailed to arrive approximately ___ days ahead of the estimated shipment arrival. The addressee for each shipping notice will be CONTACT NAME.

1D.7 MATERIALS LIST. The Contractor shall prepare and submit with the first shipping notice duplicate copies of an itemized materials list covering all material, equipment, computer hardware and software furnished under this specification The materials list shall be in sufficient detail to permit an accurate determination of the completion of shipment.

1D.8 CORRECTION OF ERRORS. Equipment and materials shall be complete in all respects within the limits herein outlined. All errors or omissions required to be corrected in the field shall be done by the Contractor or his duly authorized representative at the Contractor's expense.

1D.9 QUALITY ASSURANCE. The Contractor shall maintain a quality assurance program that provides that equipment, materials, and services under this specification whether manufactured or performed within the Contractor's plant or at any other source shall be controlled at all points necessary to assure conformance to contractual requirements. The program shall provide for the prevention and ready detection of discrepancies and for timely and positive corrective action. The Contractor shall make objective evidence of quality conformance readily available to the Purchaser. Instructions and records for quality assurance shall be controlled.

Section 2A – TECHNICAL REQUIREMENTS

2A.1 GENERAL INTENTION. It is the intention of the Purchaser to purchase a comprehensive Handheld Electronic Data Logger package for manual collection of operating data in an electronic format. The primary purpose of this system will be to improve data collection, data review, data analysis/trending, and data storage practices.

The system shall be designed with emphasis on ease of use by the plant operating and engineering staff. The system shall be capable of providing long-term storage (approximately 1 year of data) of operating data to plant performance engineers, plant management, and corporate planning staff. The program shall be capable of sharing results offline via electronic or hardcopy reports, spreadsheets, etc. The system components shall be designed to operate in a power plant environment with a high degree of reliability.

2A.2 INPUT DESCRIPTIONS. The Owner intends to utilize the Handheld Electronic Data Logger to enter, verify, and store remote instrument readings from gauges, thermometers, site glasses, and other indicating devices not connected to remote analog or digital data acquisition system. The unit currently uses a (DESCRIBE IN DETAIL OR REMOVE THIS SENTENCE AS APPLICABLE) historian for long-term storage of plant performance data. A summary of key unit variables to be collected manually using the handheld data loggers and transferred to the data historian is included below.

Parameter	Indicating Device	Range	Units of Measure
List all the data inputs to be collected here so the Bidders understand the quantity of information to be collected and stored.			

2A.3 GENERAL SOFTWARE REQUIREMENTS. Data entered into the Handheld Electronic Data Logger will be transferred to a Windows __ based computer / workstation for long-term storage, data trending, and other supported operations. For ease of use, the supporting software shall be designed to have the appearance of standard Windows applications. The graphical user interface (GUI) shall allow quick and easy navigation through the system. The GUI shall be consistent among all screen displays and tools to the maximum extent possible. Normal user interaction with the system shall be through the use of a mouse or keyboard.

Any required site license fees for the Handheld Electronic Data Logger shall be included as part of the services to be provided by the Contractor under this Contract. All software

updates issued by the Contractor within the first year after will be included in the initial purchase price and will be installed by the Purchaser, as soon as the updated software has been extensively beta tested and is available for distribution and use. Any third party software required by the Handheld Electronic Data Logger (with the exception of the Windows based operating system) shall be included in the initial purchase price of the system and shall be covered by the warranty.

2A.4 GENERAL HARDWARE REQUIREMENTS. The system for each unit shall be installed on a separate Windows based computer provided by the Purchaser. Minimum and recommended hardware requirements will be provided by the Supplier as specified in Section BD-2 of this specification. Each bid should clearly indicate if the Supplier intends to utilize an existing historian for long-term data storage or if a new data historian is included as a deliverable..

2A.5 INSTRUMENTATION. Unless specified otherwise in other sections, all instrumentation components furnished with the equipment shall be constructed to withstand the temperatures, pressures, and corrosive conditions encountered in the actual service. Instruments rated for hazardous area classifications shall be furnished where required by applicable code or the detailed specifications.

2A-6 CONTROL POWER. Electrical power for control and instrumentation will be a nominal 240 volt, single-phase, 50 hertz, alternating current. The Contractor shall provide any devices required for proper operation and protection of the equipment during electrical power supply and ambient temperature fluctuations described in the following paragraphs.

2A.7 TRAINING. At the Purchasers election, optional on-site training shall be provided to personnel who will be responsible for installing, operating and maintaining the Handheld Electronic Data Logger. Training sessions shall be customized to fit the needs of each user, including operators, engineers, supervisors, and plant managers. Each class participant shall be provided with training materials intended for reference and instructional purposes. A description of the training program, schedule and duration of training sessions shall also be provided in the Contractor's proposal. All training material shall be reviewed and approved by the Purchaser.

The Contractor shall also include a CD-ROM disk containing all training documents.

2A.8 TECHNICAL SUPPORT. The Contractor shall have technical support available in accordance with the following subsections.

2A.8.1 Telephone Support. The Contractor shall have technical support available during normal business hours. The Contractor shall have the ability when necessary to support the system via modem or network dial up during business hours.

2A.8.2 On-Site Support. The Contractor shall provide on-site support in accordance with the term of Section 1A.5.2 Contractor's Field Technical Services. Labor and expenses for other Owner requested on-site support will be provided in accordance with the rates specified in Section D Cost Proposal.

FINANACIAL PROPOSAL

ELCEN

GENERATING PLANT NAME

HANDHELD ELECTRONIC DATA LOGGER

RFP NO.
PROJECT

BID ISSUE
(REV 0)

building a world of difference™ | BLACK & VEATCH

FP – FINANCIAL PROPOSAL

FP.1 **TOTAL FIRM PRICE**. Contractor shall provide a total firm price for all materials, labor and services covered by under the base proposal. All prices shall be specified in Euros.

TOTAL FIRM PRICE _____

FP.2 **PRICE BREAKDOWN**. Contractor shall provide a price breakdown as follows for all items included in the base and optional scope of service. All prices shall be specified in Euros.

Item	Price
Hardware (List type, number, and cost of each component. Include manufacturer and model number.) a) b) c) d) Total	
Software License Fee	
Annual Maintenance Fee	
Users Group Membership Fee	
Onsite Training	
On-site Engineering /Startup Services	
On-site Testing and Reporting	
Total Man-Days in On-Site Engineering/Startup Services	Man-Days
Total Man-Days in On-Site Training	Man-Days
Other Optional Services (describe) a) b) c)	

FP.3 **LABOR RATES**. Contractor shall provide a labor rates by position applicable to the project. All rates shall be specified in Euros per man-hour. All expenses shall be at actual cost.

Position	Straight Time	Overtime	Sundays & Holidays
Project Manager			
Project Engineer			
Engineer			
IT Specialist			
Administrative Support			
Contractors Field Technical Services Personnel			
Other			

FP.4 EXCEPTIONS TO THE SPECIFICATION. The Contractor shall certify that he agrees to all provisions of the Specification and Bid Documents and clearly list any exceptions under the title of EXECPTIONS in the Proposal. Bidder's terms and conditions are not considered specific exceptions. If exceptions are taken, identify the page(s) of the proposal that apply.

FP.5 SUBCONTRACTORS. This bid is based upon the use of the following subcontractors:

Trade	Subcontractor

All technical requirements and all commercial terms and requirements must be followed by all subcontractors as well as by the Contractor.

SIGNATURE OF BIDDER

Corporation Name: _____

By Authorized Person: _____

Title: _____

Business Address: _____