FOR PUBLIC DISTRIBUTION

FINAL REPORT

FEASIBILITY STUDY FOR REPOWERING

of the

NORTH BANGKOK POWER PLANT

PS/Lib .GJ
MK
PF
DD
GV

Prepared for

Electricity Generating Authority of Thailand

4. copy

Prepared by

Burns and Roe/Power Tech Associates Joint Venture

April 2001

This report was funded by the U.S. Trade and Development Agency (TDA), an export promotion agency of the United States Government. The opinions, findings, conclusions, or recommendations expressed in this document are those of the author(s) and do not necessarily represent the official position or policies of TDA.

Mailing Address: Room 309, SA-16, Washington, DC 20523-1602
Delivery Address: 1621 North Kent Street, Suite 309, Arlington, VA 22209
Phone: 703-875-4357 • Fax: 703-875-4009 • Web site: www.tda.gov
email: info@tda.gov

FINAL REPORT

FEASIBILITY STUDY FOR REPOWERING

of the

NORTH BANGKOK POWER PLANT

Prepared for

Electricity Generating Authority of Thailand

Prepared by

Burns and Roe/Power Tech Associates Joint Venture

April 2001

This report was funded by the U.S. Trade and Development Agency (TDA), an export promotion agency of the United States Government. The opinions, findings, conclusions, or recommendations expressed in this document are those of the author(s) and do not necessarily represent the official position or policies of TDA.

Mailing and Delivery Address: 1621 North Kent Street, Suite 200, Arlington, VA 22209-2131
Phone: 703–875–4357 • **Fax:** 703–875–4009 • **Web site:** www.tda.gov • **email:** info@tda.gov

The U.S. Trade and Development Agency

The U.S. Trade and Development Agency assists in the creation of jobs for Americans by helping U.S. companies pursue overseas business opportunities. Through the funding of feasibility studies, orientation visits, training grants, conferences, and various forms of technical assistance, TDA enables American businesses to become involved in the planning stages of infrastructure and industrial projects in middle-income and developing countries. By doing this, the agency provides American firms with market entry, exposure, and information, helping them establish a position in markets that are otherwise difficult to penetrate.

Mailing and Delivery Address: 1621 North Kent Street, Suite 200, Arlington, VA 22209-2131
Phone: 703–875–4357 • **Fax:** 703–875–4009 • **Web site:** www.tda.gov • **email:** info@tda.gov

NOTICE

Exhibits ES-2; 4-6; 6-1; 6-2 and 6-3 contain confidential data and therefore are not included in this issue of the report

TABLE OF CONTENTS

EXECUTIVE SUMMARY 1

1.0 INTRODUCTION 1

2.0 ASSESSMENT OF EXISTING FACILITIES 1

2.1 Plant Description 1
- 2.1.1 General 1
- 2.1.2 Operating History 1

2.2 Mechanical Equipment and Systems 3
- 2.2.1 Condensate and Feedwater Systems 3
- 2.2.2 Circulating Water System 6
- 2.2.3 Condenser Air Evacuation System 8
- 2.2.4 Cooling and Service Water System 10
- 2.2.5 High Energy Piping 11
- 2.2.6 Fuel Oil Systems 12
- 2.2.7 Compressed Air Systems 13

2.3 Turbine-Generators 13
- 2.3.1 General Equipment Description 13
- 2.3.2 HP-IP Rotors 15
- 2.3.3 Low Pressure Rotors 16
- 2.3.4 High Pressure and Intermediate Pressure Cylinders 17
- 2.3.5 Low Pressure Cylinder 19
- 2.3.6 High Pressure Inlet 20
- 2.3.7 Intermediate Pressure Inlet Valves 23
- 2.3.8 Turbine Auxiliary Systems 25
- 2.3.9 Generator and Auxiliaries 26
- 2.3.10 Exciters 31
- 2.3.11 Generator Auxiliaries 32
- 2.3.12 Operating and Maintenance Records 33
- 2.3.13 Remaining Life Assessment 34

2.4 Chemical Equipment and Systems 37
- 2.4.1 Make-up Water Treatment 37
- 2.4.2. Circulating Water Treatment System 38
- 2.4.3 Condensate and Feedwater Treatment 38
- 2.4.4 Waste Water Treatment 38

2.5 Major Electrical Equipment 40
- 2.5.1 General 40
- 2.5.2 Station 69 kV Switchyard 41
- 2.5.3 Power Transformers 41
- 2.5.4 Medium Voltage Switchgear 42
- 2.5.5 Low Voltage Switchgear and Motor Control Center 43
- 2.5.6 Motors 45
- 2.5.7 DC and UPS Systems, D/G Emergency Systems 47

2.5.8 Relay Protection and Metering 48
2.5.9 Wires and Cables 49

2.6 Civil/Structural 50
2.6.1 Powerhouse 50
2.6.2 Intake Structure 50
2.6.3 Discharge Tunnel and Discharge Canal 50
2.6.4 Water Treatment Building 51
2.6.5 Fuel Oil Storage Tank Area 51
2.6.6 Soil Conditions for New Foundations 51
2.6.7 Demolition of Existing Steam Generators 51

2.7 Instrumentation and Controls 53
2.7.1 General Instrumentation and Control Equipment Description 53
2.7.2 Distributed Control System 54
2.7.3 Turbine Controls 55
2.7.4 BOP Controls 57
2.7.5 Support Systems 58
2.7.6 Overall Instrumentation and Control Assessment 59

3.0 NATURAL GAS FUEL INVESTIGATIONS 1

3.1 Natural Gas Supply and Demand 1

3.2 Pipeline Routing 4

3.3 Gas Composition/Conditions 6

3.4 Fuel Costs 7

4.0 ASSESSMENT OF REPOWERING OPTIONS 1

4.1 Methodology and Approach 1

4.2 Description of Options 2

4.3 Evaluation Criteria 5
4.3.1 Heat Rate 5
4.3.2 Layout 5
4.3.3 Operability 5
4.3.4 Maximum Steam Turbine Exhaust Flow 6
4.3.5 Maximum Generator Ratings 6
4.3.6 Use of Existing Equipment 6

4.4 Environmental Requirements 7
4.4.1 Airborne Emissions 7
4.4.2 Noise 12
4.4.3 Thermal Discharges 13
4.4.4 Industrial Effluents 13

4.5 Economic Evaluation 16

4.6 Comparison of Options and Recommendations 18

5.0 DESCRIPTION OF SELECTED OPTION 1

5.1 Conceptual Design and System Descriptions 1
5.1.1 Mechanical Equipment and Systems 1
5.1.2 Electrical Equipment and Systems 18
5.1.3 Instrumentation and Controls 23
5.1.4 Water and Wastewater Treatment 28

5.2 Expected Performance and Heat Balances 33

5.3 Project Milestone Schedule 34

5.4 Recommended Equipment Disposition 36

5.5 Maintenance Planning and Spare Parts Program 38
5.5.1. General 38
5.5.2 Planned Maintenance 38
5.5.3 Spare and Replacement Parts 45
5.5.4 Maintenance Tools and Equipment 45

5.6 Training 47
5.6.1 Training Needs 47
5.6.2 Program Organization 47
5.6.3. Training Program 47

5.7 Recommendations for Plant Lay-Up 49
5.7.1 General 49
5.7.2 External Surfaces 49
5.7.3 Internal Surfaces 49
5.7.4 Dehumidifiers 50
5.7.5 Summary 52

6.0 ECONOMIC AND FINANCIAL ANALYSES 1

6.1 General 1

6.2 Base Case Economic Parameters 2

6.3 New Green Field Plant 2

6.4 Capital Costs 2

6.5 Operating Costs 3

6.6 Sensitivity Analyses 3

Appendix A
Appendix B

EXHIBITS

Exhibit No.	Subject
ES-1	Performance Summary – Retrofit Options
ES-2*	Capital Cost Estimates – Retrofit Options
ES-3	Economic Comparison of Retrofit Options and New Plant
ES-4	Schematic Diagram of Repowered Plant
3-1	PTT Gas Pipeline Master Plan
3-2	Bangkok Ring Gas Project
3-3	Schedule of Bangkok Ring Project
3-4	Pipeline Routing Options
4-1	Listing of Potential Gas Turbines for Repowering
4-2	Sheet 1 – Arrangement A
	Sheet 2 – Arrangement B
	Sheet 3 – Arrangement C
4-3	Sheet 1 – Flow Diagram for Arrangement A
	Sheet 2 – Flow Diagram for Arrangement B
	Sheet 3 – Flow Diagram for Arrangement C
4-4	Economic Summary of Retrofit Options
4-5	Performance Summary of Retrofit Options
4-6*	Capital Cost Estimates of Retrofit Options
4-7	Heat Balance Data GE-9FA Without Duct Firing
4-8	Heat Balance Data Siemens V94.3A With Duct Firing
4-9	Heat Balance Data Siemens V94.3A With Duct Firing
4-10	Heat Balance Data Siemens V94-2 Without Duct Firing (#1 & 2)
4-11	Heat Balance Data Siemens V94-2A Without Duct Firing (#3)
4-12	Heat Balance Data MW701D Without Duct Firing (#1 & 2)
4-13	Heat Balance Data MW701D With Duct Firing (#1 & 2)
4-14	Heat Balance Data MW701D Without Duct Firing (#3)
4-15	Heat Balance Data MW701D With Duct Firing (#3)
4-16	Heat Balance Data GE 6FA Without Duct Firing (#1 & 2)
4-17	Heat Balance Data GE 6FA With Duct Firing (#1 & 2)
4-18	Heat Balance Data GE 6FA Without Duct Firing (#3)
4-19	Heat Balance Data GE 6FA With Duct Firing (#3)
4-20	Plot Plan – Arrangement A
4-21	Plot Plan – Arrangement B
4-22	Plot Plan – Arrangement A Alternative
4-23	Plot Plan – Arrangement B Alternative
5-1	Schematic Diagram of Selected Repowering Options
5-2	General Arrangement
5-3	Not Used
5-4	Key One Line Diagram
5-5	Block Diagram Controls & Instruments

EXHIBITS

Exhibit No.	Subject
5-6	Control System Arrangement
5-7	Layout of Control Room
5-8	I/O Estimate
5-9	Flow Diagram of New Water Treatment System
5-10	P & I Diagram Demineralized Water Treatment System
5-11	P & I Diagram Demineralized Water Treatment System
5-12	Arrangement of New Water Treatment Plant
5-13	Heat Balance Data Units 1 & 2 – Duct Firing 100% Load
5-14	Heat Balance Data Unit 3 – Duct Firing 100% Load
5-15	Heat Balance Data Unit 1 & 2 – Unfired 100% Load
5-16	Heat Balance Data Unit 3 – Unfired 100% Load
5-17	Heat Balance Data Unit 1 & 2 – Unfired 75% Load
5-18	Heat Balance Data Unit 3 – Unfired 75% Load
5-19	Milestone Schedule
5-20	Recommended Spare Parts Inventory
5-21	Operational Schematic of Dehumidification System
6-1*	Comparison: Repowered North Bangkok Plant with New Greenfield Plant
6-2*	Capital Cost Estimate for North Bangkok Repowering
6-3*	Capital Cost Estimate for New Greenfield Plant
6-4	Sensitivity Analysis – Effects of Fuel Escalation Rates
6-5	Sensitivity Analysis – Effect of Changes in Capital Costs
6-6	Sensitivity Analysis – Effects of Capacity Factor
6-7	Economic Evaluation – Repowered North Bangkok Plant
6-8	Economic Evaluation – New Greenfield Plant

***NOTICE**

Exhibits ES-2; 4-6; 6-1; 6-2 and 6-3 contain confidential data and therefore are not included in this issue of the report

EXECUTIVE SUMMARY

Study Objectives

The purpose of this study is to assess the technical feasibility and economic attractiveness of repowering, and extending the operating life of, the existing Units 1, 2 and 3 at the North Bangkok Power Station. In the proposed repowering arrangement, gas fired combustion turbine-generators (GTGs) and heat recovery steam generators (HRSGs) will be added to generate additional electricity and produce superheated steam for the existing steam turbine-generators (STGs). The existing units will be modified as required to accommodate the repowering equipment and will be restored to an acceptable level of reliability for an extended operating life of 20 years. The existing steam generators will be retired. The added GTGs will be thermally topping and operating in combined cycle with the existing STGs.

The main objectives of the proposed repowering program are to switch the operation of Units 1, 2 and 3 at the North Bangkok Station from oil firing to gas firing, to increase each unit's output and improve its efficiency. The study determined that these objectives are readily achievable and that each unit's operating life can be extended for an additional 20 years subject to a confirmation test of a few critical turbine-generator components.

Natural Gas Supply

At the present time, the North Bangkok Power Plant is not connected to the country's network of natural gas pipelines. The Petroleum Authority of Thailand (PTT), has vested responsibility to transmit natural gas from off-shore sources to power generating stations and other gas consumers. PTT included in its latest master plan for pipeline expansion a 24 inch Bangkok gas ring distribution pipeline. It would originate at a recently completed Ratchaburi to Wang Noi 30 inch trunk line and connect to the South Bangkok Power Plant with a short spur to North Bangkok.

Such a gas ring around Bangkok will accomplish a very important interconnection between the PTT eastern network supplied with gas from the Gulf of Thailand and the western network supplied with the off-shore gas from Myanmar. While the optimum routing to the North Bangkok Station will depend on the results of detailed surveys, preliminary investigations by PTT and Unocal Thailand Ltd. identified the best choice to be the route originating at PTT's Block Valve #6 of Ratchaburi-Wang Noi trunk line and running south within EGAT's 230 kV (being upgraded to 500 kV) Soi Noi-South Bangkok transmission line right-of-way (ROW) and then eastward within the ROW of southern railway line toward the North Bangkok Power Plant. The length of the pipeline is estimated at about 35 km and its cost at about 70 million US dollars.

Assessment of Repowering Options

In order to select the most practical and economical repowering configuration, commercially available gas turbine-generator models (GTGs) that best match the size and throttle steam conditions of the existing reheat steam turbine-generators (STGs) were considered. In addition, the use of EGAT's Mitsubishi model MW 701D gas turbine-generators installed at the Nong Chok site, was considered in the study. In all cases, in order to fully utilize waste heat from gas turbine exhaust gases, the HRSGs are each provided with three steam pressure levels, and a reheat and an economizer section. The high pressure steam delivers main steam at 102 kg/cm^2 (1,450 psig) and at or close to 538° C (1,000°F) to the steam turbine inlet, the middle pressure supplies steam to the IP turbine at the reheat intercept valves at or close to 538° C (1,000°F), and low pressure steam is injected into the steam turbine at the LP crossover point to the LP turbine.

Where full output of the steam turbines could not be achieved with available waste heat, supplementary duct firing was introduced. Although such additional capacity is attained at the expense of higher heat rate, it is economically justified. Whenever the extra capacity is not needed, the plant would be operated without the supplementary firing in order to achieve better fuel economy. For the purpose of economic analyses, in all duct firing study cases, it was assumed that only 20 percent of the time the units are operated with duct firing.

Heat and mass balances were performed to select optimum configurations using commercially available gas turbines. The configurations selected for further consideration were:

A. Two gas turbine-generators, each with its HRSG feeding the three existing steam turbine-generators, Arrangement A.

B. Three gas turbine-generators, each with its HRSG. Each GTG/HRSG feeding an existing steam turbine, Arrangement B.

C. Six medium sized GTG/HRSG sets arranged in pairs with each pair feeding one of the existing steam turbines, Arrangement C.

The options were compared based on performance, costs, required space and operability. Performance of each option analyzed is summarized in Exhibit ES-1, capital costs are identified in Exhibit ES-2 and the results of the economic analyses are shown in Exhibit ES-3.

The recommended option is Arrangement B (see Exhibit ES-4) utilizing the existing Mitsubishi MW 701D combustion turbines. In this configuration each of the three Mitsubishi gas turbine-generators relocated from Nong Chok will be

equipped with a new HRSG and paired with one of the existing steam turbine generators.

The existing Mitsubishi gas turbines are vintage (D class) units and are less efficient than modern machines such as Siemens V94.2 or V94.2A models. However, as shown in Exhibit ES-2 lower capital costs resulting from utilizing the existing gas turbines offsets higher fuel costs and lower net output of this option. Taking into consideration the cost of overhauling and relocating of these machines, which are owned by EGAT, the resulting levelized generation cost of the repowered installation is less than the levelized generation cost of repowering with new machines. A comparison of the recommended option with a hypothetical "green field" new combined cycle plant shows that repowering of the existing North Bangkok units is economically justified on the basis of the current economic parameters listed in Section 6. It should be noted that Capital Cost estimates of repowering the existing units also include the cost of upgrading from 69 kV to 230 kV system in accordance with EGAT's program of transmission system improvements. Sensitivity analyses performed in this study show that fuel cost escalation rates and annual plant capacity factors have a significant impact on the study results. Even at high fuel escalation rates and high capacity factors, the repowered North Bangkok facility is shown to generate power at lower cost than a new plant.

Assessment of Existing Facilities

The results of condition assessment of major plant equipment and systems that would be reused in the repowered configuration indicate that all three units of the North Bangkok Power Plant would provide reliable service in the repowered mode of operation for an extended life of 20 years. This condition assessment is based on the detailed review of past operating and maintenance history, information on major equipment and component condition, and comparison with similar units of the same vintage. Recommendations for replacements, overhauls, upgrading and repair to sustain reliable service over the extended life are made in the body of this report. In addition, to confirm that no incipient catastrophic failures of major components such as turbine-generator shafts are likely to occur, we recommend that selective borescoping examinations and non-destructive metallurgical examinations be conducted as a first step in project implementation.

Major equipment to be added to the existing installation at the North Bangkok Power Plant include:

- Gas Turbine-Generators (GTGs) (existing from Nong Chok)
- Heat Recovery Steam Generators (HRSGs) (new)
- 230 kV Gas-Insulated Switchgear (new)
- Generator Step-Up Transformers for STGs (new)
- Generator Step-Up Transformers for GTGs (existing from Nong Chok)
- Helper Cooling Tower (new)

- Water Treatment Plant (new)
- Auxiliary Circulating Water Pumps (new)
- Distributed Control System (new)
- Control Room (new)
- Turbine Bypass Systems (new)
- Condenser Vacuum Pumps (new)

Major equipment to be reused in the repowered configuration include:

- Steam Turbine – Generators
- Condensers
- Circulating Water Pumps
- Boiler Feed Pumps

Major upgrades, overhauls and replacements to be performed during the repowering program:

- Retubing Condensers
- Overhaul Steam Turbine Generators
- Replace Condensate Pumps
- Replace Service Water Pumps

Major existing equipment expected to be abandoned or demolished:

- Steam-Generators
- Feedwater Heaters (except for deaerating heaters)
- 69 kV Switchyard
- Main Step-up Transformers
- Fuel Oil Tanks

Environmental Compliance

The proposed repowering program meets environmental regulations and limitations in effect in Thailand and meets the standards of the World Bank as well. The primary environmental issues which need to be addressed in the North Bangkok repowering project are NOx emissions, thermal discharges, liquid effluents and noise.

Thailand's NOx emission standards for new plants are 120 ppmV, dry basis, at 7% O_2 for natural gas and 180 ppmV for oil. World Bank limits are higher 144 and 188 ppmV, respectively. Modern gas fired combustion turbines utilize dry low NOx combustion (DLN) techniques to reduce nitrogen oxide emissions while firing natural gas. Equipment suppliers of modern GTGs typically guarantee to limit NOx emissions to be below 25 ppm (dry basis at 15% O_2) or about 59 ppm @ 7% O_2, which is considerably below the 120 ppm Thai emission standards for NOx. When firing distillate fuel oil in the same combustion turbines, water

injection is required to limit NOx emission to 42 ppm at 15% O_2 or 99 ppm at 7% O_2 which would also meet Thai standards of 180 ppm @ 7% O_2.

The proposed Mitsubishi combustion turbines from Nong Chok are not equipped with DLN combustors and require injection of water to control NOx emissions while firing either natural gas or distillate oil. Estimated demineralized water requirement is about 33 m^3/hr for each of the three turbines or about 100 m^3/hr for the entire installation. This treated water capacity must be added to the existing demineralized plant output which only meets present requirements.

Thermal discharges from the North Bangkok Plant to Chao Phraya river are required to be below 40°C all year round. At the present time, during the hottest season when river temperature occasionally exceeds 30°C, the existing plant must reduce load to meet this temperature requirement. For repowering, an assist cooling tower, common to all three units, will be added to the existing once-through cooling system to limit the cooling water discharge temperature to below 40°C. The proposed cooling tower will be erected above the existing discharge canal, will take heated water pumped by new auxiliary circulating water pumps from the canal upstream of the newly installed gated dam and will dump the cooled water back into the discharge canal downstream of the dam.

The repowered plant will be equipped with a new system of collecting, settling and neutralizing all liquid water effluents (including regeneration solutions from the demineralization plant and boiler washdowns) as required to meet both Thai and the more restrictive World Bank standards.

The allowable noise generated by equipment is limited by Thai standard to a maximum level 85dBA at 1 meter distance from source. Thai noise standards also limit noise from the facility to a Leq 24 hour average level of 70dBA at the boundary. In addition, Thai standards limit exposure to noise in the workplace requiring ear protection where exposure limits are exceeded. These noise limits will be met by well designed systems which may include inlet air and stack silencers and appropriate equipment enclosures.

Project Schedule

Milestone schedule for repowering the North Bangkok Power Station developed for this report assumes the project approval early in 2001 and the project commercial operation date of January 1, 2005.

If the project implementation is unduly delayed, the condition of the plant, which is already shutdown and in short-term lay-up mode, may deteriorate despite any steps taken to preserve plant equipment and systems. Corrosion, mold and mildew are primary causes of progressive deterioration which may adversely impact the project cost.

EXHIBITS

EXECUTIVE SUMMARY

Exhibit No.	Subject
ES-1	Performance Summary Retrofit Options
ES-2	Capital Cost Estimates Retrofit Options
ES-3	Economic Comparison of Retrofit Options and New Plant
ES-4	Schematic Diagram of Repowered Plant

EXHIBIT ES-1
PERFORMANCE SUMMARY OF RETROFIT OPTIONS

Description	ARRANGEMENT					
	A	A	B		B	C
Gas Turbine Generators						
- Manufacturer	GE	Siemens	Siemens		Mitsubishi	GE
- Model	PG9351FA	V94.3A	V94.2	V94.2A	MW701D	PG6101FA
- Quantity	2	2	2	1	3	6
- Unit Output - kW	229,956	208,214	141,291	168,304	129,360	62,001
- Unit Heat Rate - Btu/kWh LHV	9,643	9,581	10,335	9,894	10,785	10,548
- Total Output - kW	459,912	416,428	282,582	168,304	388,080	372,003
Steam Turbine Generators						
Output Unfired - kW						
- Unit 1	75,469	65,604	73,447	—	65,668	72,251
- Unit 2	75,469	65,604	73,447	—	65,668	72,251
- Unit 3	90,692	78,133	—	90,920	67,891	74,806
- Total	241,630	209,340	237,814		199,227	219,308
Output Fired - kW						
- Unit 1	NA	74,526	NA		75,002	74,989
- Unit 2	NA	74,526	NA		75,002	74,989
- Unit 3	NA	88,736	NA		88,092	88,102
- Total	NA	237,788	NA		238,096	238,080
Combined Cycle Plant						
No Duct Firing						
- Gross Output - kW	701,542	625,768	688,700		587,307	591,311
- Auxiliary Loads - kW	21,046	18,773	20,661		17,620	17,740
- Net Output - kW	680,496	606,995	668,039		569,687	573,571
- Net Heat Rate - Btu/kWh LHV	6,517	6,573	6,864		7,347	6,841
Full Duct Firing						
- Gross Output - kW	NA	654,216	NA		626,176	610,083
- Auxiliary Loads - kW	NA	19,626	NA		18,786	18,303
- Net Output - kW	NA	634,590	NA		607,390	591,780
- Supplementary Fuel - MBtuh	NA	270.8	NA		317.0	164.9
- Net Heat Rate - Btu/kWh LHV	NA	6,714	NA		7,413	6,909

Note: Performance is based on 90°F (32.2°C) ambient, 70% relative humidity and assumes that all gas turbines operate with evaporative coolers

Exhibit ES-3
ECONOMIC SUMMARY OF RETROFIT OPTIONS AND NEW PLANT

Description	REPOWERING ARRANGEMENT					NEW GREENFIELD
Case	A	A	B	B	C	PLANT
Gas Turbine Generators						
- Manufacturer	GE	Siemens	Siemens	Mitsubishi	GE	GE
- Model	PG9351FA	V94.3A	V94.2 V94.2A	MW701D	PG6101FA	PG9351FA
- Quantity	2	2	2 1	3	6	2
Design Net Plant Output - kW	680,496	634,590	668,039	602,928	591,780	684,600
Capital Cost Estimates						
Base Capital Cost - $1000	260,700	257,300	263,900	160,000	315,800	428,000
Capital Cost Base Year	Jul-00	Jul-00	Jul-00	Jul-00	Jul-00	Jul-00
Construction Start	Apr-03	Apr-03	Apr-03	Apr-03	Apr-03	Jul-02
Escalation - $1000	39,874	39,354	40,363	24,472	48,301	58,251
IDC - $1000	26,238	25,895	26,560	16,103	31,783	61,702
Total Capital Cost - $1000	326,811	322,549	330,823	200,575	395,884	547,953
Commercial Operation	Jan-05	Jan-05	Jan-05	Jan-05	Jan-05	Jan-05
Unit Cost at COD - $/kW	480	508	495	333	669	800
Annual Costs - $1000/yr						
Capital Charges	46,425	45,819	46,995	28,492	56,237	77,839
Fuel Costs	113,151	106,878	116,997	114,498	103,496	110,387
O&M	27,145	25,968	26,857	24,915	25,334	28,575
Total	186,721	178,666	190,849	167,906	185,068	216,801
Generation Costs - $/kWh						
First Year						
Capital Charges	0.0097	0.0103	0.0100	0.0067	0.0136	0.0162
Fuel Costs	0.0237	0.0240	0.0250	0.0271	0.0250	0.023
O&M	0.0057	0.0058	0.0057	0.0059	0.0061	0.006
Total	0.0392	0.0402	0.0408	0.0397	0.0446	0.0452
Levelized						
Capital Charges	0.0087	0.0092	0.0090	0.0060	0.0121	0.0145
Fuel Costs	0.0269	0.0272	0.0283	0.0307	0.0283	0.0261
O&M	0.0072	0.0074	0.0073	0.0075	0.0077	0.0075
Total	0.0428	0.0439	0.0446	0.0443	0.0481	0.0481

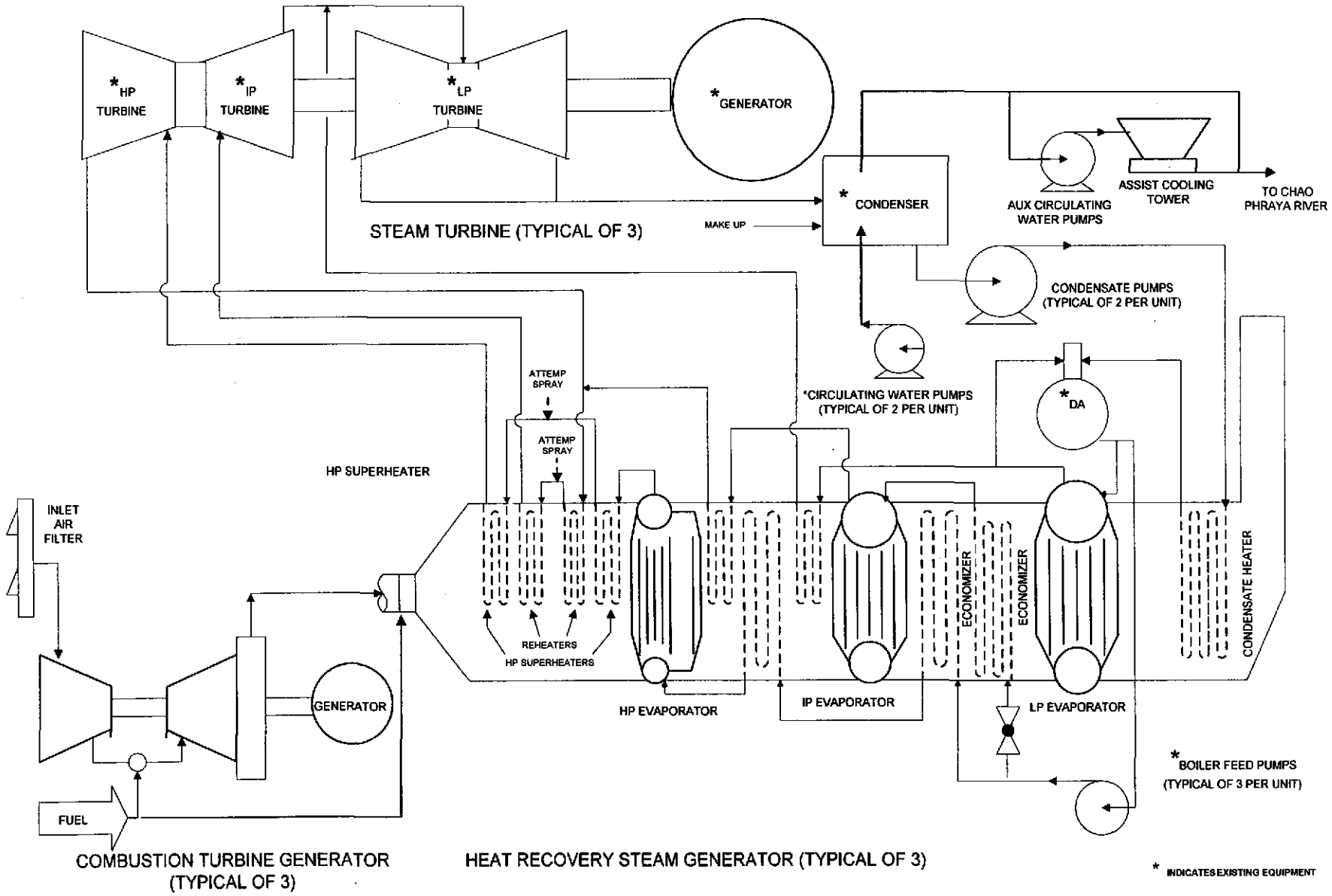

Exhibit ES - 4
SCHEMATIC DIAGRAM OF SELECTED OPTION FOR REPOWERING NORTH BANGKOK

1.0 INTRODUCTION

The Electricity Generating Authority of Thailand (EGAT) has identified the Unit 1, 2 and 3 of the North Bangkok Power Plant as candidates for life extension and for repowering with gas fired combustion turbines. EGAT has selected Burns and Roe/Power Tech Associates, Joint Venture to perform a study to determine the technical feasibility and the economic attractiveness of repowering the existing units with gas turbines. The study shall address additions, modifications and equipment upgrades to achieve acceptable levels of efficiency, electric output, reliability and maintenance costs over the extended period of plant life. The motivation for considering repowering with gas turbines include the following advantages:

- Conversion from imported fuel oil to largely domestically sourced natural gas
- Improved efficiency and increased output
- Reduced air emissions and thermal discharges
- Preservation of an existing asset, North Bangkok Power Plant, which is strategically located in the load center.

Pursuant to this interest, EGAT, with a grant from the USTDA, commissioned this feasibility study.

The study report is organized in six sections following the Executive Summary as follows:

Section 1.0 Introduction
Describes the purpose of the study and the organization of the report.

Section 2.0 Assessment of the Existing Facilities
Describes equipment and system modifications and additions required to convert to a repowering operation, as well as upgrades, replacements and repairs needed to sustain reliable service during the extended life of these units. Also, identifies equipment and systems which will be retired.

Section 3.0 Natural Gas Fuel Investigations
Describes general availability and sources of natural gas in Thailand and specific requirements to extend the gas pipeline network to North Bangkok.

Section 4.0 Assessment of Repowering Options
Evaluates various repowering configurations, analyzes performance, develops capital costs of candidate configurations and presents the results of economic analyses of selected options.

Section 5.0 Description of Selected Option
Presents the conceptual design of the recommended repowering option including flow and one line diagrams, arrangement layout and system descriptions.

Section 6.0 Economic and Financial Analyses
Presents economic and financial results of the evaluation, compares economics of repowering with a hypothetical new green field plant, describes economic parameters used in the analysis and presents the result of sensitivity studies conducted to assess the impact of various economic scenarios.

2.0 ASSESSMENT OF EXISTING FACILITIES

2.1 Plant Description

2.1.1 General

The North Bangkok Power Plant is located on the west side of the Chao Phraya River, near the Rama VI Bridge, in Bang Kruai, Nonthaburi. The plant consists of three generating units. The first two units (Units 1 & 2), each rated 75MW, were designed to burn lignite and heavy residual fuel oil. Unit 1 was commissioned in March 1961 and Unit 2 in June 1964. Unit 1 operated for a short while during its first year of service burning lignite. Operating difficulties and the high cost of shipping the lignite led to the decision to operate the plant only on fuel oil. When Unit 2 was built, the lignite and ash handling systems were not installed. Later, the 87.5 MW Unit 3 was built, designed solely for fuel oil firing. It was put in commercial operation in December 1968.

The plant grade is 3 meters above mean sea level. The plant includes a powerhouse which houses the turbine-generators, condensers, feedwater heaters, deaerators, condensate pumps, boiler feed pumps, air compressors, switchgear and motor control centers, control rooms and some offices. The steam generators and their auxiliaries are located outdoors.

The circulating water pumps, traveling water screens, service water pumps, chlorination equipment are all located in an intake building. A separate building houses the make-up water demineralizing plant. The main electric step up transformers, auxiliary and start-up transformers, and switchyard are all located outdoors.

The purpose of this section is to summarize the results of condition assessment of the steam turbine-generators and other major plant equipment that would be reused in the repowered configuration, assess potential risks during the extended life and make recommendations for periodic inspections, overhauls, upgrading and repair of major components and systems to sustain reliable service over the extended life in the repowered mode of operation.

2.1.2 Operating History

The operating history of the units from start of commercial operation until September 1999 is summarized below:

Description	Unit 1	Unit 2	Unit 3
Date of start commercial operation	Mar 1961	July 1964	Dec 1968
Number of cold starts	65	65	80
Number of warm starts	80	63	67
Number of hot starts	114	128	147
Accumulated running hours	273,082	257,603	220,849
Forced outage hours	5,070	1,996	5,713
Forced outage factor, %	1.48	0.62	2.04
Scheduled outage hours	52,401	44,173	39,952
Total outage hours	66,761	60,472	48,582
Accumulated running factor %	79.93	79.48	78.79
Equivalent operating hours	288,950	273,310	234,792

The equivalent operating hours are calculated to assess the effect of stresses imposed on the main components due to mode of operation as well as the deterioration that can normally be experienced with an idle machine. The following formula is a reasonable approximation of incremental degradation of the steam turbine which is the most critical component of the plant. It is based on engineering principles and experience with hundreds of steam turbines:

$$He = Hop + (40 \times Sc) + (20 \times Sw) + (10 \times Sh) + (5 \times Rt) + 0.1\ Hd$$

where:

He = equivalent operating hours
Hop = actual hours of operation
Sc = number of cold starts
Sw = number of warm starts
Sh = number of hot starts
Rt = number of ramps from 25% to 100% load
Hd = number of downtime hours

In calculating the equivalent operating hours spent until September 1999, we used operating records provided by EGAT and we have assumed that each unit had 20 ramps from 25% load to full load each year.

Comparing the equivalent operating hours to the accumulated running hours, it is evident that these units have operated most of the time in a base load mode and the exposure to start-ups and load changes that normally cause high stresses on critical components, such as turbine rotor and casing, have been low. The forced outage factor is also relatively low, which is an indication that the equipment should be in good overall condition.

2.2 Mechanical Equipment and Systems

2.2.1 Condensate and Feedwater Systems

2.2.1.1 General

In the repowered configuration, the existing surface condensers, the condenser air evacuation systems, deaerators and their storage tanks and the boiler feed pumps will be reused. The low pressure and high pressure feedwater heaters will be taken out of service and either left in place or removed.

2.2.1.2 Surface Condensers

The condensers of Units 1 and 2 each have 9,272 tubes of 7/8 inches OD, 18 BWG, 26 ft. 2 5/8 in. long, with a heat exchange area of 55,000 sq. ft. The condensers are radial flow, horizontal, two pass arrangement. The tubes are of aluminum brass. The Unit 3 condenser is of the same design and construction but has 10,072 tubes with a total heat transfer surface of 60,000 sq. ft. and tube length of 26 ft. 2 ¼ in.

All three condensers were piped and valved for back washing. In 1982, all three units were equipped with Taprogge ball tube cleaning systems and backwashing was discontinued.

The Unit 1 condenser was retubed in march 1981 and again in October 1992. Unit 2 was retubed in November 1971 and in May 1993, while Unit 3 was retubed in April 1975 and in July 1990. EGAT's records further indicate that Unit 3 condenser leakage rate increased from 1989 to 1990 by 26% and 9% in the two condenser halves, respectively. Leaking tubes were plugged but tube leakage causes a lot of operating problems. In EGAT's opinion, tubes should be replaced in all three condensers. B&R/PTA concurs with this opinion, but recommends that retubing be made during the repowering conversion using improved materials such as 90-10 CuNi in order to extend tube life beyond 7 to 10 years experienced by the existing aluminum brass tubes. Titanium tubes could also be considered, although significantly increased cost and at least 16 percent loss in effective heat transfer rates will mitigate against this option. Plastic tube inserts may be required to prevent the reported tube erosion.

The North Bangkok units were not provided with steam bypass systems. For the repowering, it is recommended that a steam bypass system be added to each turbine. The system will be used during start-up and on turbine trips to divert main steam and hot reheat steam to the condenser. Pressure reducing stations and spray desuperheating will be provided in the piping leading to the condenser. Each condenser will be equipped with spray pipes which will distribute the incoming steam along the length of the condenser. A spray pipe support structure welded to the condenser shell will be provided. As part of the upgrading, each condenser should be opened, inspected and repairs made as

needed. The design and location of spray pipes as well as the deaerating features and possible effect on vibration of condenser tubes should be investigated and appropriate modifications made for use in the repowered configuration.

2.2.1.3 Condensate Pumps and Piping

The condensate pumps of all three units are identical in size and construction. They are of multistage, vertical can type. Each unit has two pumps, one of which operates and the other is on stand-by. Pump rating is 950 gpm, total head 405 ft., minimum submergence 3.7 ft. below nozzle centerline, operating at 1,480 rpm, driven by a 150 HP electric motor.

In the repowered configuration at full turbine generator load, the maximum condensate flow needed is 1,200 gpm. To achieve such increased capacity, the existing pumps would have to be refitted with an additional stage, with larger size impellers and larger size electric motors. Because it could not be ascertained whether the existing cans can accommodate larger pump internals, for study purposes it was assumed that all condensate pumps will be replaced with new vertical condensate pumps, two per unit, each designed for the new operating conditions with appropriate margins to achieve maximum unit capacity.

The existing 12 inch condensate piping from the condenser to the condensate pumps and the 8 inch piping from the condensate pumps to the air ejectors and to the gland steam condenser will be retained. Also to be retained is the deaerator level control station (diaphragm operated 6" control valve, shut-off valves and control signal from the deaerator). However, because the existing control valves are about 80% open at full flow, a new trim designed to accommodate a larger flow will be required to replace the existing control valve internals. The low pressure heaters No. 1 and No. 2 will be taken out of service by capping their extraction steam lines and directing the condensate flow from the control station to the HRSG condensate heater. The drip pumps (2 per unit) will also be taken out of service.

The maximum condensate flow in the 8 inch piping system will be 7.7 ft./sec. and in the 6 inch control station about 13.2 ft./sec., which is acceptable.

The condensate piping system should be checked periodically to assure that there is no evidence of flow accelerated corrosion/erosion. The condensate storage tanks and condensate transfer pumps will have to be relocated to make room for the new HRSGs.

2.2.1.4 Deaerators and Storage Tanks

The deaerators of all three units are of the same size and construction. They are of the vertical tray and spray direct contact type. The storage tank is integral with

the heater in a vertical arrangement. The deaerators were rated for a flow of 580,600 lbs/hr each. Under the new operating conditions, the expected maximum flow for Unit 3 will be about 623,000 lbs/hr which is a 7% increase in flow rate. This increase in flow is not expected to significantly affect the deaerating capability of the deaerating heater. The flow in Units 1 and 2, will not exceed 580,600 lbs/hr, which is the original deaerator design flow.

The deaerators and their storage tanks will be retained and left in place for the repowered configuration. The deaerators should be inspected for cracks at welds and proper alignment of the trays and spray valves. All deaerator trays have been recently replaced, on Unit 2 as part of the major overhaul, and on Units 1 and 3 during previous overhauls. Generally, the deaerators are in good operating condition.

A needle valve should be installed in the vent lines of the deaerators to allow adjustment of the flow and prevent steam losses. Currently, $^1/_8$ inch diameter fixed orifices are provided in the 2 inch vent lines for this purpose.

The storage tanks, impingement plates and antivortex plates should be inspected for distortion or corrosion/erosion and repaired if necessary.

2.2.1.5 Boiler Feed Pumps and Auxiliaries

Each unit has 3 boiler feed pumps. Two pumps are needed for operation at full load and the third is kept on standby. There is also a spare rotor that can be used to replace any of the existing BF pump rotors, if needed.

The pumps are 8 stage, horizontal, barrel type. The pumps are rated at 725 gpm (333,000 lbs/hr), inlet pressure 63.6 psig, discharge pressure 1,833.6 psig with water at 300°F. The pumps operate at 4,400 rpm driven by 1,000 HP, 1,487 rpm electric motors, via speed increasers.

In the repowered configuration, the pumps will deliver a lower flow rate and higher discharge pressure, required by the HRSG. At maximum load, each pump will deliver 590 gpm, which is about 81% of the original rated flow, at a TDH of 4,800 ft. or 1,975 psig. The pumps will be suitable for the new service conditions. With the reduced suction flow, the available NPSH created by location of the deaerator at elevation of 51'9" above grade should be adequate. To assure minimum flow protection, each BF pump discharge line is provided with a 2 ½ inch recirculation line to the deaerator. Each pump also has a 2 inch leak-off line discharging to the deaerator. The BP pumps, their gear boxes and accessories should be left in place and used in the new configuration. All components should be inspected and overhauled as needed.

The piping and valves between the deaerator and the BF pumps should also be left in place, as well as the leak-off and minimum recirculation lines.

A new 10 inch BF discharge line should be routed to the HRSG. The vertical HP feedwater heaters, No. 4 and No. 5, should be taken out of service, their function will be performed by the HRSG. To the extent practical, the control valves and the shut-off valves of the boiler feed and spray attemperation flow control stations should be reused to control boiler feedwater flow to the HRSGs and for the attemperation services. The boiler feedwater system shut off valves are currently hand operated. Those that will be reused shall be motorized.

2.2.2 Circulating Water System

The circulating water intake, located on the shore of the Chao Phraya river is common to all three units. The intake is an open canal with rip-rap lined floor and sidewalls.

A trash rack with a rake mechanism and traveling water screens are used to prevent debris from entering the circulating water pumps. Each generating unit is served by two vertical mixed flow circulating water pumps. Each pump is rated at 24,000 gpm, 41 ft. head, and is driven by a 300 HP electric motor at 490 RPM. Each pump is located in its own basin. The water entering each basin is cleaned by one 10 ft. wide traveling water screen. Stop logs are provided to close the water intake when needed to clean or to perform maintenance or repairs in the basin.

Each pair of basins houses two screen wash pumps and one or two service water pumps. An additional service water pump, for a total of four (4), is installed in one of the bays. A common to all units chlorination system is used to control marine organism growth in the circulating water system.

Each circulating water pump discharges into a 42 inch diameter steel pipe that brings the circulating water to one of the condenser water boxes. Discharge of the heated water from the condenser is through 42 inch diameter steel pipes leading to a common underground discharge tunnel that runs along the turbine building and then discharges into an open canal which conveys the water back to the Chao Phraya river. All units were equipped in 1982 with Taprogge type condenser tube cleaning systems.

Currently, when all three units operate at maximum capacity, a heat load of about 1,260 x 10^6 Btu/hr is rejected to the circulating water system, which leads to a temperature rise of 18°F (10°C) in the cooling water.

When all three units are repowered, the amount of heat rejected at full load will be 1,676 x 10^6 Btu/hr, an increase of 33.3%. With all six circulating water pumps in service the temperature rise will be 23.3°F (13°C), an increase of 5.3°F (3°C).

Thai regulations limit to 40°C (104°F) The temperature of water that can be discharged into the river. The temperature rise at 500 m from the discharge or at the middle of the river must not exceed 3°C. Presently, during some hot days when river water temperature reaches 30°C or above, the plant load must be reduced in order not to exceed the allowable circulating water discharge temperature.

The intake structure, traveling water screens, circulating water pumps, piping, valves, tube cleaning system and discharge tunnel should be kept as is. An auxiliary circulating water cooling tower common to all three generating units, should be added to lower the discharge water temperature to the permissible level. To save space and costs, the cooling tower could be erected above the existing discharge canal. New auxiliary circulating water pumps will take the heated water from the discharge canal, upstream of the newly installed gate and dam, to prevent mixing with cooling tower discharge water, deliver it to the cooling tower which will dump the cooled water back into the discharge canal downstream of the dam.

The proposed location of the cooling tower is near the existing 69 kV plant switchyard and the new 230 kV switchyard.

While location of a wet mechanical draft cooling tower in close proximity to switchyards is not typical practice, it is not expected to present any significant operational or maintenance problems. The effects of moisture from the evaporated water in the cooling tower plume are not expected to add significantly to those from normal ambient humidity and rain. Solids deposition from drift escaping from the tower into the plume would be minimal. In modern mechanical draft towers the drift can be reduced to 0.001% of the flow rate. The cooling tower will operate in the once-through mode, and will therefore not concentrate the salts in the water. With the maximum solids content of the circulating water of less than 2000 ppm, the maximum rate of discharge of solids in the plume would be approximately 15 kg per day. Because of the upward velocity imparted to drift by the fans and the buoyancy of the plume, and the time

it takes for the very small droplets to fall from the plume, the drift tends to be dispersed over a wide area and the maximum deposition of solids from the drift generally does not occur in the immediate proximity of the towers. Based on extrapolations from field measurements for other plants, the maximum solids deposition rate at the site is expected to be below 0.08 grams per square meter per month. This would occur only during the periods of highest river salinity and when the cooling tower was operated. It should be noted that the new plant's 230 kV switchyard will be of the GIS type housed in a building and, therefore, it will not be affected by any plume produced by the cooling tower.

The existing circulating water pumps were repaired during previous overhauls, but need a new overhaul. Rubbing at bearing areas was noticed on some of the pumps. All six pumps should be overhauled. Wear of bearing sleeves, erosion of impellers and shafts is expected. Trash rake needs repair and realignment.

The traveling water screens also need an overhaul to repair corroded support members, screens, and chains. Protective paint should be applied. The existing screen wash system is ineffective in removing debris particularly for Unit 3. It is recommended that the system be overhauled and refitted with new spray nozzles. The screen wash pumps should also be overhauled. Circulating water valves and tube cleaning system are in good operating condition and are suitable for the extended life of the plant. The entire circulating water system and especially the intake structure submerged components and the piping should be drained, inspected, and repaired, as needed.

2.2.3 Condenser Air Evacuation System

Each unit is equipped with a two stage steam-air ejector with inter and after condensers, used to maintain the vacuum within the condenser during operation. A single-element hogging jet, capable of handling 100 SCFM free dry air against a 20 inch Hg vacuum designed for atmospheric exhaust is provided for starting up the unit.

The air and non-condensables are withdrawn from the condenser through a 10 inch line. Steam is normally supplied to the ejectors from the main steam line through a pressure reducing station.

The existing steam jet air ejector system presents several drawbacks for operation in a combined cycle plant. On unit shutdown, the vacuum in the condenser is broken allowing air to enter the condenser which contaminates the condensate stored in the hotwell. Maintenance of vacuum in the condenser with the steam ejectors while the unit is down can be accomplished only with steam supplied by another operating unit. The use of bottled-up steam in the HRSG is

not feasible even for short shutdowns since the drum pressure decays rapidly. At startup and shutdown, the presence of an operator in the jet ejector area is required for manual operation of the valves. With the proposed three pressure level HRSG, the condenser must perform efficiently also as a deaerating device to prevent corrosion in the economizer and low pressure vaporizing sections. The existing air evacuation system has performed with very little repair requirements over the years. It is expected that periodic maintenance and repair only of valves, instruments and controls will be required over the extended life of the units.

In order to prevent corrosion of the feedwater and boiler components by air entrained in the condensate, it is advisable to maintain the condenser under partial vacuum during short term unit shutdowns, such as overnight or weekend shutdowns. To accomplish this, it is recommended to install in parallel with the present steam jet air ejectors a mechanical vacuum pump. The ten inch air extraction pipe should be cut and a tee installed with a connection to the mechanical pump. The piping arrangement should permit operation on either jet ejectors, vacuum pump or both simultaneously.

The single vacuum pump recommended to be added at each unit in parallel to the existing system should be sized to provide for normal air removal requirements without any margins or redundancies that would otherwise be required by the Heat Exchange Institute (HEI) standards. For abnormal operating conditions, such as severe air inleakage, the vacuum pump can be assisted by jet ejectors. The vacuum pump should be capable of being started by remote pushbutton from the control room without the need of an operator in the area to ease the work load of the operating crew.

The proposed mechanical pump consists of a two stage water ring pump with separate first and second stage bodies with the rotors on a common shaft. The entire unit comes prepackaged. It is mounted on a structural steel base. The electric motor driver is rated at 50 HP, 3 phase/50 Hz, and is a squirrel cage induction type. The package contains all piping, wiring instruments and controls for fully automatic operation. In the holding mode, the exhauster package should be capable of extracting 12.5 scfm of air at 2.0 inches Hg Abs with a 25°F difference between condenser saturation temperature and inlet circulating water temperature. In the hogging mode, the capacity is approximately 800 scfm dry air with suction pressure of 5 inches Hg absolute.

Mechanical vacuum pumps have been installed on units of the same vintage as part of life extension and repowering. Operating experience has shown that addition of mechanical vacuum pumps is beneficial and is highly recommended for units that operate with load swings or need to assure a high degree of oxygen removal in the condenser.

2.2.4 Cooling and Service Water System

The service water system at the North Bangkok Station serves to remove heat from various plant equipment of all three units and to reject it to the river. The existing four (4) service water pumps are underpowered (125 HP motors are too small) and are in poor condition with corroded diffusers. All four service water pumps should be either replaced entirely or new rotors fitted into the existing housings.

The vertical service water pumps are located in the intake basins of the circulating water pumps. They take suction from the water in the basin and discharge into a 20 inch service water header which is common to all three units. The header feeds the cooling and service water loops of each of the units. It consists of a 12 inch main supply line that feeds two 8 inch branch lines. One of these lines supplies cooling water to the hydrogen coolers, turbine oil coolers, seal oil coolers, condensate pumps and boiler feed pumps. The other 8 inch line feeds the air compressors and their aftercoolers, the boiler fans and sample coolers. Service water for chemical feed, toilets, floor cleaning, etc. is also provided from this line.

The heated water from equipment coolers is collected in two 8 inch lines, which are then connected to a 12 inch line from which the water flows into the circulating water discharge tunnel.

The service water valves and accessories are in good condition and can serve the repowered plant for an additional 20 years. A recent burst of an underground 16" service line indicate that all piping should be inspected and corroded or damaged sections need be replaced. As mentioned above, the service water pumps should either be replaced with new ones or at least the entire rotor be replaced. The capacity of the system is believed to be sufficient to satisfy the requirements of the added equipment, however, this should be checked during detail design. Should there be a need to increase the flow rate, there is space in the intake structure to add a service water pump or the new pumps shall be purchased for a larger flow rate.

Plant components and equipment which receive cooling water directly from the river, include turbine lube oil coolers, generator hydrogen coolers, seal oil coolers, air compressors and sample coolers. Boiler auxiliaries will be disconnected from the system upon repowering. Generally, river water quality is inferior, seasonally rich in chlorides and contributes to corrosion and fouling of equipment.

A separate closed cooling water system using condensate quality water should be provided to reduce equipment maintenance problems. Such system would serve air compressors, seal oil coolers, condensate pumps and other auxiliary equipment which could be switched from the direct service water system to the closed cooling system. However, major equipment, including turbine oil coolers

and hydrogen coolers, could not be transferred to the new system which will operate at somewhat higher cooling water temperature than the design of this equipment would allow.

The proposed closed cooling water system would serve all three (3) units and would consist of two (2) 100% load each horizontal circulating water pumps, two (2) 100% load tubular heat exchangers, one (1) cooling water head tank for thermal expansion, chemical feed tank, piping, valves, controls and instrumentation. The system will circulate water continuously in a closed loop, with make-up from the condensate system and chemical inhibitors for corrosion protection. Service water system will be used as a cooling medium with river water circulated through tubes of the heat exchangers. Automatic temperature controls will be provided.

2.2.5 High Energy Piping

High energy piping consists of the piping systems containing steam or water at high pressures and temperatures which in the event of failure could present a safety hazard to personnel and equipment. It includes the main steam, hot and cold reheat steam, boiler feedwater, extraction steam, condensate and heater drains. The main concerns are creep, fatigue, erosion and corrosion.

Creep is of greater concern at very high operating temperatures (850°F and higher), such as on the main steam and hot reheat lines. The main steam pipe on Unit 3 exhibited cracks on an elbow, which was replaced about 2 years ago. It is likely that other areas of the main steam lines are affected. The main steam and reheat lines that connect the existing boilers to the steam turbines will be taken out of service. Since creep manifests itself after long times operating at high temperatures, it is best not to use any portions of the existing piping, and new pipes should be installed between the HRSGs and the steam turbines.

The pipes between the steam chest and the HP casing should be reused (left in place) but inspected visually and by nondestructive means. Metallographic replicas at high stress areas should be prepared and examined microscopically for evidence of creep damage and/or cracks. Wall thickness measurements should be conducted. Defects in material should be repaired by welding and stress relieving.

New cold reheat lines should be installed between the HRSGs and the steam turbines. Since the cold reheat lines operate at lower temperatures, they are not subjected to creep, and some pipe sections can be reused for the new cold reheat lines, after inspection and assurance that the material is in good condition.

To take advantage of the heat from the gas turbine exhaust gases, the low pressure feedwater heaters No. 1 and 2 and the high pressure feedwater heaters No. 4 and 5 will be taken out of service, and their function will be taken over by the HRSGs. The only feedwater heaters that will be reused are the deaerators.

The 12 inch boiler feed suction line from the deaerator and its 8 inch branch lines to the BF pumps should remain in place. New BF piping will be provided from BF pumps to HRSG. The 10 inch header should be cut and new pipes installed from this header to the HRSGs. The boiler feed control, spray attemperator, and shut-off valves can be relocated and reused.

The condensate lines from the condenser to the condensate pumps and a portion of the 8 inch condensate line up to and including the control valve, which regulates the condensate flow, should remain in use. New piping should be installed from these control valves to the HRSGs' condensate heaters.

The 10 inch extraction steam line (3 EX) to the deaerator should remain in service. All other extraction lines should have either blanks installed in the turbine shell in accordance with the turbine manufacturer's recommendations, or to be capped. The piping shall be taken out of service and removed. If the lines are capped, pipe stubs should be provided with drain lines to remove collected condensate. These drains should be designed in accordance with the ANSI/ASME standard TDP-1 titled "Recommended Practices for Prevention of Water Damage to Steam Turbines Used for Electric Power Generating Fossil Fueled Plants".

The gland steam control station and condenser air evacuation ejectors are supplied with main steam from the main steam line of the respective unit. These 2 inch and 1 ½ inch lines should remain in service. An auxiliary steam line should be installed to supply steam from any operating unit to a unit that is not running. The auxiliary steam should be used for gland seals and condenser air removal jet ejectors.

Piping, valves and accessories that will be reused should be inspected and repaired to assure reliable operation in the future.

2.2.6 Fuel Oil Systems

There are six fuel oil storage tanks; five are for heavy residual oil and one is for light oil. The repowered plant will use natural gas as the primary fuel and light oil as backup. Heavy residual oil use will be discontinued.

The heavy residual fuel oil tanks, pumps and piping will be dismantled and removed. A new light oil storage tank, transfer pumps and piping will have to be installed and the entire area where the storage tanks are currently located should be cleared and prepared for the new gas turbine generators, the HRSGs and their auxiliaries.

The practicality and relative costs of cleaning and relocating one of the larger heavy fuel oil storage tanks and using it as a light oil storage tank should be investigated during the detailed design phase. Some of the fuel oil basket strainers, valves and tank accessories may also be reused.

2.2.7 Compressed Air Systems

Two 100 scfm 100 psig and one 200 scfm 100 psig reciprocating type instrument air compressors were initially installed with Unit 1. The 100 scfm compressor served for instrument air and the 200 scfm compressor for plant air. Each compressor has an aftercooler, moisture separator and its own air receiver. Refrigerant type air dryers and filters are used to remove moisture and impurities from the instrument air.

When Units 2 and 3 were built, a new instrument air compressor was added for each new unit. The reciprocating air compressors required frequent attention and repair.

A new Atlas Copco rotary type air compressor, model ZT 90 with an output of 510 cfm at 100 psig was installed to replace the older reciprocating compressors. Rotary compressors require less maintenance and repair than the reciprocating type.

The instrument and control air requirements of the repowered combined cycle plant will be substantially lower than the existing oil fired plant. The major instrument air consumers currently are the oil fired boilers and the feedwater heater drain control valves. These will be taken out of operation as part of the repowering. The HRSGs, which will replace the oil fired boilers, have very low instrument air requirements.

The Atlas Copco air compressor will have sufficient capacity to serve the compressed air needs of the repowered units.

Unit 3 boiler was also served by two aspirating air compressors, each with an aftercooler and air receiver. These compressors will not be needed for the repowered plant.

Some of the reciprocating air compressors should be overhauled and used as backup to the rotary Atlas Copco compressor which will be the main operating unit.

2.3 Turbine-Generators

2.3.1 General Equipment Description

All three North Bangkok turbine-generators were manufactured by Westinghouse Electric Corp. of USA, now a part of Siemens-Westinghouse. The units are

single shaft, tandem-compound, double flow exhaust, condensing, reheat machines. Each turbine has two-cylinders, one with the HP-IP and the other with the LP elements. The HP-IP element has a combined rotor of high pressure and intermediate pressure blading. The HP-IP cylinders are equipped with steam seals. The LP element is a double flow design and is provided with water seals. Both of these rotors are made from monoblock forging with a bore in the center.

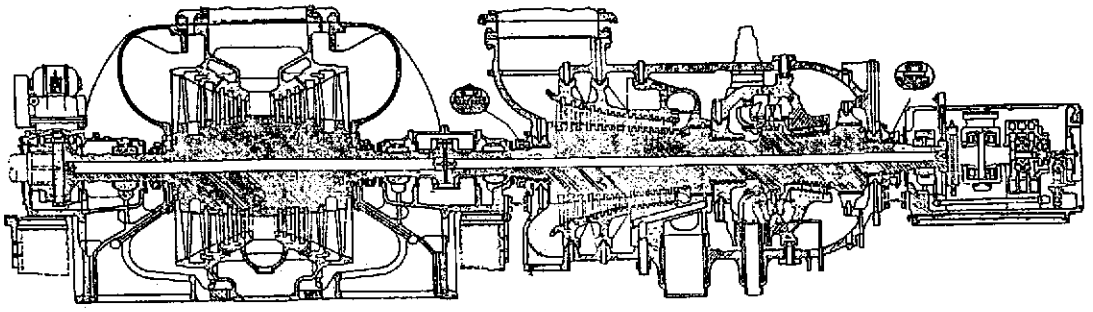

All three units are designed for identical steam conditions of 1,450 psig, 1,000°F superheat and 1,000°F reheat. Units 1 and 2 have identical ratings of 75,000 kW nominal capacity and 82,000 kW maximum output at 2.5 inch Hg.abs. exhaust steam pressure and 3% makeup. The designs of all three units are essentially the same. Unit 3 is slightly larger with a nominal capacity of 87,500 kW and maximum output of 90,000 kW at 2.5 inch Hg.abs. exhaust steam pressure and 0% makeup. The larger rating of Unit 3 requires a larger steam flow which, in turn, requires larger high pressure and intermediate pressure turbine inlet blading.

The design turbine heat rate is 8,730 Btu/kWh (2,199 kCal/kWhr) for Units 1 and 2 and 8,441 Btu/kWh (2,126 kCal/kWhr) for Unit 3. The turbines are designed for partial arc admission, having a two-stage impulse blade control stage (Curtis stage), followed by 31 reaction blade elements. Each turbine has two steam chests, one located on each side of the HP turbine casing, each containing three

governor valves actuated from a single servomotor, through a common bar link mechanism.

The Westinghouse electrical generators are two pole, 3 phase, 50 cycle, 3,000 rpm, hydrogen cooled machines. Unit 1 and 2 generators are rated 96,000 kVA at 30 psig H_2 and 13,800V. Unit 3 is rated at 105,000 kVA at 30 psig H_2 and 13,800 V.

2.3.2 HP-IP Rotors

In the units equipped with a control (Curtis) stage, the HP-IP turbine rotors are among the most critical and highly stressed components in power generating equipment. Load change at constant inlet pressure produces a wide range of steam inlet temperatures which result in thermal gradients imposed on the rotor material. The thermal gradients produce cycling stresses which when superimposed on top of normal stresses caused by the rotor centrifugal force and the stress concentration factors, cause degradation of the rotor material properties, primarily its fatigue and creep rupture strength, fracture toughness and temperature embrittlement level, and consequent reduction in anticipated rotor life.

The thermal stresses are a result of temperature mismatch between steam and rotor material. Since these units operate at constant inlet pressure and sequential valve control, their impulse chamber outlet steam temperature varies considerably over the load range. The most critical rotor area from a thermal stress viewpoint is usually in the vicinity of the steam admission of the HP-IP turbine.

High stress concentration factors are predominant in the blade groove and sealing surface regions. To reduce stress concentration factors due to sharp radii, contour machining of the rotor outer surface in the high temperature inlet area has been implemented on Units 1 and 2. It should also be implemented on Unit 3. This modification has the effect of reducing the normal design stress level in the rotor which will increase the life of the rotor.

The effect of the thermal stresses can be controlled by the rate and the magnitude of temperature change in the inlet steam conditions. Variable pressure operation of HRSGs, coupled with throttling rather than sequential governor valve control, is one way of controlling the magnitude of temperature changes. This operational improvement could be readily implemented by the addition of individual valve actuating servomotors as recommended elsewhere in this report.

The HP-IP rotors are made of Cr-Mo-V steel, which has given very good results on similar units in the US. Since these units operate at 3,000 RPM, the rotor stresses are lower than on similar US machines (3,600 RPM) and therefore creep life usage should be lower.

The rotor is a highly stressed component subject to the highest temperatures developed within the turbine-generator unit. All three units have already operated in excess of 30 years. The result is that some portion of their rotor life has already been expended. Since life extension in repowering mode is being contemplated, it is prudent to determine the amount of remaining life in this component by borescopic examination. The prediction of remaining life is discussed further in this report.

The rotor history of these units reveals no problems to date. With the anticipated long term operation of the units, the recommendations of the supplier with respect to bore and surface examinations should be followed. This usually amounts to periodic examinations to assure that the rotor body is structurally adequate for continued operation. Material flaws in the body, if undetected and not corrected, can lead to severe equipment problems resulting in long outages.

The turbines have been inspected several times in the past. Typical findings during inspections of rotating and stationary HP-IP parts included: The 1986 fitness examination of Unit 2 revealed heavy erosion of Curtis blades and of the first three rows of IP blades. Latest inspections indicate little erosion on Units 1 and 3. The shrouds of the first four rows of Unit 1 turbine blading were replaced in 1988. The Unit 2 Curtis blade row and guide blades were replaced in 1993. At the same time, the first three rows of the IP turbine rotating blades were replaced. During November 1999 to January 2000, major overhaul of Unit 2 seal strips on stationary Curtis stage were replaced. During major inspection of Unit 2, erosion of some Curtis blades was detected.

Frequent periodic inspections with material condition assessments and borescopic examination during each major overhaul are recommended. Periodic repair or replacement of blades may be required during the proposed unit life extension.

2.3.3 Low Pressure Rotors

Unlike the high temperature HP and IP rotors, LP rotors are not subject to creep damage because the maximum temperature of operation is below the creep regime. However, LP rotors are highly stressed, largely by thermal transients that lead to low-cycle fatigue damage. In addition, high cycle bending fatigue, embrittlement and pitting corrosion are the chief concerns.

The LP shafts are made from Ni-Mo-V steel, which is no longer used in modern LP rotors. This rotor material has moderate physical properties. Cracking at the water seal area is of particular concern.

At each major outage the low pressure turbine rotors and blades should be visually inspected for any erosion of materials and cracks, particularly in the area of the last several stages of blades, and inspection of the fillet area of the rotor

body. This type of inspection is used to determine if rotor material surface cracking has occurred at critical locations.

Some turbines of this vintage have experienced high cycle fatigue cracks at shallow radii grooves or transition machining and cracks at last stages of blading stellited erosion strips. These areas must be checked periodically for early detection and remedial action.

During the 1997 minor inspection of Unit 3, cracked lashing wire was observed on L-0 blades and cracked stellite strips were found on L-1 blades on both the generator and turbine sides and repairs were made. During the major overhaul of Unit 2 in 1999/2000, stellite strip erosion was detected on the last stage blades (L-0) and on the fifth stage (L-5). Twenty five L-2 blades were replaced.

During the extended life of these rotors, replacement of L-0, L-1, L-2 blades, of stellite strips, and of lashing wires will be necessary.

2.3.4 High Pressure and Intermediate Pressure Cylinders

The HP-IP outer cylinders are of chrome-moly steel casting. They have welded-on HP inlet sleeves to which the pipes that bring main steam from the steam chest control valves are attached. The HP-IP outer cylinder supports and guides the inner cylinders. The inner cylinders support the blading.

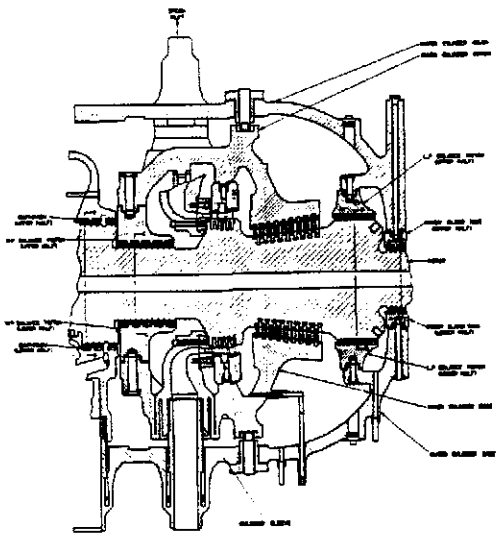

Low cycle fatigue due to alternating pressure and thermal stresses governs the useful life of these pressure vessel components. The life remaining for this cylinder is dictated by the operating history, in terms of the cyclic pressure and thermal loading resulting from startups, shutdowns and load swings in the past.

In view of the satisfactory operating performance of this component and outer cylinders of similar design, it is judged that the HP-IP outer cylinder will have sufficient fatigue life for an additional 20 years of operation in the repowered mode. There is also no concern about outer cylinder material creep, since the cylinder is subjected to moderate steam temperatures.

The HP inner cylinder is a chrome-moly steel casting with five built-in nozzle chambers that provides support and guide for the Curtis blade ring and the HP reaction blade rings.

In the past, cracks were reported in areas adjacent to the nozzle chambers in the HP inner cylinder of Unit 2. Thorough periodic inspections and weld repair when cracks are discovered is the most appropriate course of action.

Replacement with a new design nozzle block was implemented on Unit 2 in 1993 after the Unit 2 nozzle block was found cracked and eroded. Unit 1 and 3 nozzle blocks were replaced in 1994.

Should nozzle blocks erode in the future, they should be repaired or replaced.

Unlike the HP outer cylinder, the HP inner cylinder is more affected by low cycle fatigue due to the temperature differential across its wall and the resulting more severe stress fluctuations during startups, shutdowns and load swings. The effect of material creep is also more pronounced for the HP inner cylinder compared to the HP outer cylinder since it is exposed to steam at higher temperatures.

The fatigue and creep life of the HP inner cylinders judged by their performance in the past as well as compared to other inner cylinders of similar design, indicates that they could provide needed service for an extended operating life provided a periodic inspection and testing program is conducted.

These HP outer and inner cylinders can continue to operate without any major modifications. A maintenance program of periodic nondestructive examination (NDE) testing of the components for material cracking should be conducted because of the increase in probability of material cracking as a result of the planned life extension of the unit. If cracks develop, they will begin in areas of high stress concentrations caused by irregular contours of the components. Magnetic particle testing should concentrate in these locations. Weld repair of cracks should be sufficient to return the units to service if distress is found during a scheduled outage.

The IP inner cylinders are also made of chrome-moly steel castings. They have a single inlet for reheat steam at the base and an integral blade ring at the generator end. The IP inner cylinder provides support and guide for the IP dummy ring. The life of this component is governed by low cycle fatigue. Temperature differences across its wall create large stress fluctuations during startup, shutdowns and load swings. Creep is also an important consideration since the IP inner cylinder is subjected to 1,000°F steam and experiences large temperature differentials (up to 300°F) across the wall. Reportedly, IP cylinders of similar machines have a good operating history. Therefore, it is very likely that the North Bangkok IP cylinders will withstand the extended life in repowered service.

Like the HP cylinder, the IP cylinders should be inspected and NDE tested during the major outages to reveal any isolated cracks, and material specimens should

be taken to determine creep rupture properties. Repair should be done when necessary. Weld repair of cracks should be sufficient to return the unit to service, if such cracks occur.

2.3.5 Low Pressure Cylinder

The LP outer cylinder consists of a cover and a base, each of which is made of two grey iron castings bolted together. The cylinder acts as a support and locating mechanism for the inner cylinder and guides the exhaust steam from the inner cylinder blade path to the main condenser.

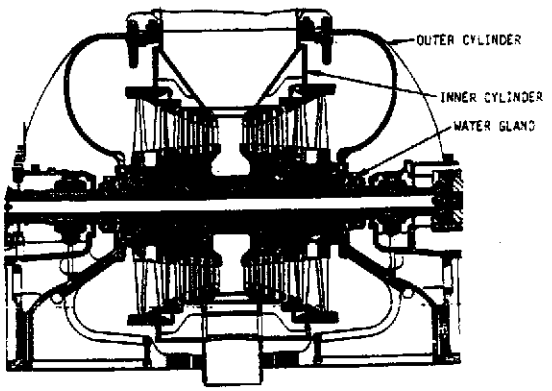

Use of cast iron as the LP outer cylinder material was standard practice in the 1950s and 1960s. Cast iron has low fatigue life. Cracks, once initiated, would propagate relatively quickly and weld repair is difficult and does not always last for a long time. Because the LP outer casings are subject to very low stresses and to narrow ranges of stress fluctuations, cast iron has been a satisfactory material.

Since available inspection reports do not indicate any problems with the outer LP cylinder and operating experience of cylinders of similar design has been satisfactory, it is expected that the outer cylinder will last an additional 20 years in the repowered plant configuration.

The LP inner cylinder base and cover are made from carbon steel castings. They are of the double flow design, with a single steam inlet in the cover and extraction connections in the base. The blade rows are attached to integral blade rings at each end.

The inner cylinder is exposed to a wide range of steam temperatures. Low cycle fatigue cracking is the main concern in view of the high temperature drop in the axial direction for the inner cylinder with integral blade rings. Erosion can occur in the zone where the steam becomes unsaturated and moisture droplets are entrained in the steam flow.

Cylinders made from castings with integral blade rings are prone to damage from excessive thermal stresses caused by temperature gradients. Cracks have been reported on similar units at inlet zone stay bars and extraction zone ribs. Although there is no evidence of distress reported for the North Bangkok units, it is possible that during the next 20 years cracking of stay bars and ribs will occur and welding to restore the cylinder integrity will be required.

The LP inner cylinder should be thoroughly inspected at each maintenance outage. Repair welding of cracked stay bars and/or ribs should be anticipated from time to time. Replacement of some blades or row of blades may also be necessary.

Modern turbines use fabricated LP inner cylinders of improved design with detached blade rings which provide for needed flexibility, thereby assuring adequate fatigue life, especially for the stay bars and ribs. Among the recommendations made for Unit 2 during the 1986 fitness assessment, was the replacement of the LP inner cylinder after approximately 5-10 years of cycling operation. Replacement of the inner LP cylinders is not cost effective and therefore was not recommended. Since these units have not been subjected to severe cycling operation, they are believed to be able to operate for many more years in base load mode.

During startup, excessively high turbine exhaust temperatures are often experienced. Modern machines are provided with an exhaust hood water spray system controlled by the temperature of the exhaust steam. Addition of a spray system to prevent excessive high temperatures in the exhaust hood and the resulting stresses and distortions was implemented in 1992 in Unit 2, and in 1994/1995 in Units 1 and 3.

2.3.6 High Pressure Inlet

The high pressure stationary inlet components consist of the throttle valves, steam chests with governor valves and interconnecting flexible steam piping.

Each turbine has two throttle valves, each in its own valve body, supplying main steam to two steam chests, located one on each side of the HP turbine. Each steam chest is provided with a single servomotor operating all three governor valves by means of a common bar lift linkage system. Units 1 and 2 have fixed slots in the valve link lever, while Unit 3 has means of adjustment by adding shims between the valve link and the bolted operating lever link caps.

The high pressure inlet components have to accommodate the stresses due to steam pressure and thermal movements due to the high inlet steam temperatures.

The basic design configuration of these units (typical of Westinghouse's design) features a design concept that minimizes thermal stresses and material

degradation. The throttle valves and steam chests rest on the unit foundation and are separated from the high pressure turbine cylinder by flexible steam piping. This separation permits the throttle valve and steam chest assembly to expand and contract independently of the governing valves in the HP cylinder, which are also free to move without significant restraint by adjacent parts. This basic design eliminates excessive thermal stresses between adjacent parts.

The material used for most of the HP stationary inlet components and piping leads is 1 ¼% Cr, ½% Mo, which was standard in the industry when these units were built. Since then, the American Society of Mechanical Engineers (ASME) has lowered the allowable stress levels for this material at 1,000°F service conditions. No problems were reported to date with Westinghouse turbines that used this material.

The main steam piping between the steam chest and the high pressure outer cylinder is made of 2 ¼ Cr, ½ Mo steel. This material was used extensively by US turbine manufacturers for steam temperatures up to 1,000°F at the time these units were built. In the early 1960s the ASME Piping Code allowable stresses for this material were lowered by about 15% due to reported unsatisfactory performance. An inspection made in 1985 discovered a crack in the bore of one of the break flanges, which is believed to be due to thermal shock. Westinghouse's assessment for Unit 2 in 1986, indicated that the pressure stresses are within present day allowable values for this material and sufficient flexibility is provided in the piping loops so that fatigue life is expected to be adequate for the extended plant life.

These components can continue to operate without any modifications. A program of periodic NDE testing of the components for material cracking should be maintained because of the possibility of material cracking as a result of the planned life extension of the unit. If cracks develop, they will begin in areas of high stress concentrations caused by the irregular contours of the component surfaces. Magnetic particle testing should be concentrated in these locations. Weld repair of cracks should be sufficient to return the unit to service if distress is found during a scheduled outage. The main steam piping is also discussed in Paragraph 2.2.5.

In operation the throttle valves, governor valves and steam chest are subject to fatigue, because they are exposed to large thermal gradients during start-up and load changes. During normal operation, the throttle valves and steam chest are subject to creep due to exposure to high temperatures (800 to 1,000°F) for long periods of time and to erosion at the valve ports and at narrow steam passages by solid particles entrained in the steam. The throttle and governor valve contact surfaces are subject to wear due to high steam velocities through these components.

A review of plant operating and maintenance records shows no significant failures or breakdowns of high pressure stationary inlet components. Typical findings during the last few inspections include erosion of a Unit 3 throttle valve requiring replacement of valve stem and bushing during 1997 minor inspection and a replacement of a governing valve seat insert which was found cracked during the most recent 1999/2000 major inspection of Unit 2. Westinghouse's 1986 unit fitness review of the Unit 2 turbine indicated that the creep stresses were below the allowable values and no significant creep damage was predicted by Westinghouse over the extended unit life span.

However, creep damage is a concern over the extended life of these machines and therefore the HP stationary inlet components should be checked for cracks and material degradation on a scheduled basis. Creep tests of sample material should be performed during the scheduled major overhaul of Unit 1 in 2001. Because Unit 1 is the oldest of the units, predictions for Unit 1 can be assumed to apply to Units 2 and 3 as well.

The existing throttle valve stud engagement length to diameter ratio is below current standards. The ratio of 1.25 found on this design is below current standard of 1.50 minimum. Difficulties with studs pulling out or leaning from the valve bodies have a greater probability on valves with stud length to diameter ratios of less than 1.5. Large temperature gradients during startup or shutdown could aggravate the situation. It is recommended that frequent inspections be made during future outages with particular attention paid to the valve moving parts, steam bushings, seats, pilot valve, studs and the condition of threads in the valve body.

The throttle valves and governing valves of all three units were reconditioned following the recommendations of 1989 report on life extension.

The throttle valves include permanent strainers. When new heat recovery boilers and new main steam piping are installed, the additional use of a temporary strainer is recommended. Originally temporary wire mesh type strainers were provided.

When performing inspections, they should include DE and NDE of the welded areas of the steam chest, stop valve, elbows and other attachments that form the pressure containing elements of the turbines.

Spare bushings, stems, valve guides and seat inserts should be stocked.

The installation of modern digital electro-hydraulic systems with individual servomotors to control governor valves is recommended. The spacing between the centerlines of adjacent governor valves is 16 inches (406 mm) on Units 1 and 2 and 12 inches (305 mm) on Unit 3. The spacing of 16 inches is adequate for adding individual valve actuating servomotors. The 12 inch spacing of Unit 3 is

tight, and a special design may be needed to accommodate individual servomotor actuators. Conversion to individual servomotors will allow greater flexibility in optimizing the governor valve operation.

2.3.7 Intermediate Pressure Inlet Valves

The intermediate pressure turbine inlet components consist of the reheat stop valves, intercept valves, and flexible steam piping. These components receive 1,000°F steam and are subjected to a low level of cyclic thermal stress. The reheat stop and intercept valves of all three units were reconditioned following the recommendations of the 1989 report on life extension.

There are two reheat stop valves on each turbine, one located upstream of each interceptor valve for use to back up the interceptor valve and rapidly stop the flow of reheat steam when the overspeed trip mechanism operates. It is a clapper type valve which is normally held in the open position. Should the overspeed trip mechanism operate to dump the high pressure oil supply, the loss of high pressure oil beneath the operating piston will allow the spring to force the piston and rod down. This will rotate the shaft to close the clapper. Wear, erosion, low cycle fatigue and creep are potential concerns that have to be addressed for life extension of these devices.

Available records do not indicate any cracks or wear of the reheat stop valves. The reheat stop valves are made of 1 ¼% Cr ½% Mo steel and there is a concern about the exit pipe and its weld to the reheat stop valve body using a backing ring.

Testing of the valves was reported to be a problem because once closed they are difficult to open. Westinghouse, the original turbine manufacturer, suggests that the primary reason for reheat valves not to reopen after testing is because

the steam pressure drop across the valve disc is too large for servomotor to overcome. Typically, there should be an equalizing line around the disc to balance the pressure. The before seat drain and the after seat drain should be connected with an isolation valve (normally open) and an orifice in the connecting line. The reheat intercept valves are also very susceptible to valve stem leakage. If downstream leakage is too high or the connecting line flow is restricted, the pressure will not equalize across the disc and the servomotor will not overcome pressure differential.

Westinghouse recommends to inspect the interceptor valves for stem leakage and to restore the seat contact if stem leakage is excessive. The bypass connecting line should be inspected to verify that the orifice or the isolation valve do not restrict the line. These valves should be inspected and overhauled.

The valves should be inspected every three years. The inspection should include NDE of the weld at the reheat stop valve body outlet. Stocking of spare bushings, shaft and clapper is also recommended. Generally, these components require minimal maintenance and have a very good reliability record.

The two interceptor valves are non-modulating during normal operation providing tight shutoff of reheat steam between the two reheat stop valves and IP inlets during shutdowns and when bypassing the IP turbines. Erosion, wear, low cycle fatigue and creep are of concern for these valves.

Industry experience shows that reheat intercept valves of similar vintage generally show wear of stem and bushings and the seating surfaces between body seat and plug.

These valves are attached to the piping using backing rings at the weld connections. The primary material used for this system is 1 ¼% chrome ½% moly steel. Appearance of cracks at the welds would be a matter of concern during the extended life of the unit.

These valves have a permanent strainer. After the installation of the heat recovery boilers and new hot reheat piping, use of a temporary strainer is recommended to catch debris from construction. The temporary strainer originally supplied were of the wire mesh type.

Periodic inspections of the interceptor valves should be continued to maintain the present level of availability. These inspections should include NDE of the seat inserts and the inlet and exit welds of the valve bodies.

Replacement seats should be stocked considering the difficulty in repairing the stellite seats. Spares for those items subject to wear, such as bushings, and valve stems should also be stocked.

2.3.8 Turbine Auxiliary Systems

2.3.8.1 Gland Seal Systems

The function of the rotor gland sealing system is to prevent the leakage of air into or steam out of the turbine cylinders along the rotor. The current system uses steam as the sealant at the high pressure/intermediate pressure turbines and water as the sealant for the low pressure turbines. At start-up and low loads, steam from ahead of the throttle valves is supplied to the turbine steam glands. As unit output increases, with corresponding increases in turbine internal pressures, the high pressure turbine becomes a gland steam supply source instead of a receiver. Automatic pressure regulating valves are used to maintain a proper gland steam supply header pressure while controlling the position of the supply and spillover valves.

The present gland seal system shall be upgraded for the repowering program. The use of steam as the sealant at the HP-IP turbines is satisfactory. The use of water at the low pressure turbine should be discontinued and steam should also be used as the sealant at these locations. Water seals were common practice for LP cylinders in the 1950s and early 1960 but have been abandoned due to their disadvantages. Water seals produce temperature differentials on the turbine rotor which cause thermal stresses that can lead to material cracking on the rotor surface. Water seals do not produce an effective seal unless the turbine rotor is above 2000 RPM since they rely on rotor speed to provide a pumping action to produce the required sealing pressure. Steam seals provide an effective seal independent of rotor speed. The change from water to steam seals will also eliminate problems associated with erosion and corrosion of LP shaft near the gland area. By having steam seals on all of the turbine elements, a vacuum in the unit condenser can be maintained during brief shut down periods in order to reduce the time required to put the unit back in operation.

The existing gland steam control system used in Unit 1 and 2 is obsolete and should be replaced because of high maintenance and low flexibility in operation. The two valve steam chest controller has high pressure steam supply and spillover valves. Up to certain low load, the high pressure steam is used to seal the glands. The spillover valve is activated when turbine no longer needs sealing steam at higher loads and has excess steam leakage which is discharged to the condenser.

This system should be replaced by a modern pneumatic operated individual diaphragm control valves or an electronic controller acting on individual electrohydraulic actuators regulating steam supply and spillover valves. Such system uses main steam for sealing steam at shutdown and load loads and it improves efficiency by eliminating high pressure steam source at part load. In addition, steam desuperheating improves flexibility of operation by matching gland steam temperature with rotor metal temperature. An auxiliary steam source

is used whenever the boiler is unable to supply the gland steam during shut down periods.

Modifications to the gland steam seal controls will be required, anyhow, to provide for the increased flow to the low pressure glands after their conversion from water to steam sealing.

Latest turbine inspection reports indicate that excessive clearances were found at the gland seals, which result in high steam leakages. It is recommended that during major outages these clearances be restored to the original design values.

It is also recommended that the axial and radial clearances between the steam glands be checked during every major turbine inspeciton to assure that they are within allowable ranges.

2.3.8.2 Turbine Insulation

Consideration should be given to replace the existing calcium silicate turbine casing insulation by a prepackaged mallet type insulation. No conformation on availability of such replacement could be obtained from Siemens Westinghouse.

2.3.9 Generator and Auxiliaries

All three generators at the North Bangkok plant are of Westinghouse Electric Corp. manufacture. Unit 1 and 2 machines are of identical size and construction rated at 96 MVA, at 0.8 PF, 13.8 kV, 50 Hz, 30 psig (2 kg/cm) hydrogen pressure. Unit 3 is rated at 105 MVA under the same conditions.

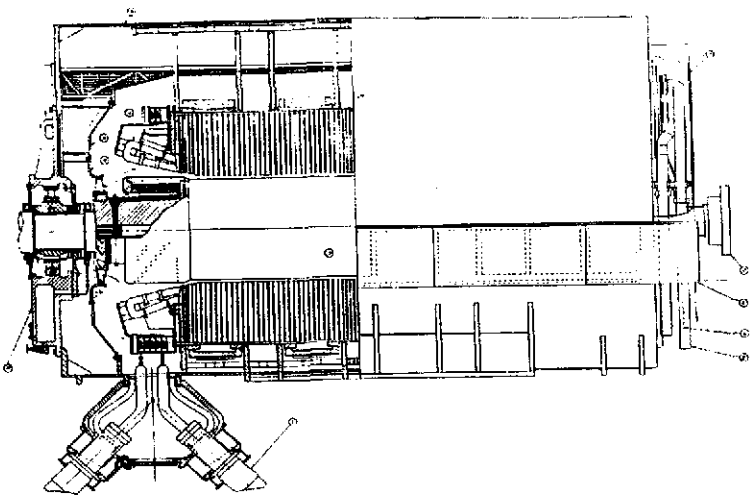

The electric generators are enclosed in explosion proof housing, designed to operate with pressurized hydrogen as a cooling medium and a seal oil system to contain the hydrogen.

The North Bangkok generators have had a good service record. With the exception of repair of a cooling water leak to the hydrogen cooler and occasional replacement of radial seal rings, there were no recent major repairs or failures.

Catastrophic failures of electric generator components are rare, the few historical occurrences are associated with fracture of the retaining ring that holds the rotor

end windings in place. However, malfunction of major generator elements can cause extended outages and therefore assessment of current condition and remaining life is of great importance.

Damage to major generator components is typically attributable to dielectric breakdown, mechanical and electrical erosion, and rotor metal fatigue. Frequent startups and shutdowns would adversely affect the life of the electric generator.

Breakdowns of the insulation systems in stators and rotors are the most common problems. The electric generators of this vintage have the groundwall insulation made of mica bonded with asphalt. Asphalt is thermoplastic and swells with increasing temperature, which causes the groundwall insulation to expand in service and lock the winding in the slots. Although this is advantageous for base load operation, in cycling it presents problems. The asphalt tends to expand into the air ducts, which immobilizes the insulation and prevents thermal expansion and contraction of the copper coils. This, in time, leads to girth cracks or tape separations and failure of the insulation.

Industry experience has shown that the average life of the insulation used in stator windings for units similar to the North Bangkok was reported by Westinghouse to be 25 years. Experience also shows that a mechanical failure is more likely than general dielectric degradation. A common problem is physical separation of the layers of insulation which results in thermal movement of the coils. This in turn causes loosening of the coils relative to the generator core. It is believed that the winding may have to be replaced during the next 20 years of operation. Rewinding should be considered only upon detection of incipient failure modes.

The evaluation of the generator components in regard to life extension is primarily related to the remaining time to failure of the insulation on the windings, the stator, rotor and exciter. The insulation life of high voltage stator windings can be evaluated by high-potential tests at 2/3 of the new machine final test level (2 times rated voltage plus 1,000 volts). The low voltage components such as rotors and exciter windings are tested by "Megger" voltages of 500 volts for ratings of 375 volts and below, and 1,000 volts for ratings above 375 volts.

In 1985, the Unit 2 stator and rotor windings were inspected with attention given to detection of cracks and deterioration of insulation. There were no signs of degradation that would cause alarm. No high-potential tests were made.

In March 1977, during the minor inspeciton of Unit 1, no significant problems with the generator were identified. Wedge tightness tests found 28% to be loose and 57% slightly loose. The results of electrical tests of rotor and stator were normal. One rubber lead seal was replaced. A new exciter rotor was installed during this outage.

During the minor inspection of Unit 3 in October 1977, the wedge tightness test revealed only 1% of loose wedges and 32% of slightly loose wedges. Electrical test results were normal. Radial lead seal rings were replaced. Major overhaul inspection of Unit 2 in 1999/2000 characterized all aspects of the generator condition as normal. No problems were identified.

High potential tests on the high voltage stator windings are routinely performed every four to six years. It is recommended that high-pot testing be done at least every three years. Positive results of these tests are adequate to assure satisfactory operation under normal service for three to five years. If it fails, the winding must be replaced. When abnormal service occurs, a thorough visual inspection and a test program are desirable. Visual inspeciton is as important as a test program in evaluation of the condition of the generators. The inspeciton is useful in determining what physical changes are occurring in such components as windings, winding bracing structures, rotor components and the stator core. Differential expansion and contraction can cause migration of bracing components and, eventually, looseness. Periodic inspection of the equipment provides the opportunity to detect and repair looseness of bracing in any form to prevent major problems in the future.

The following are specific recommendations for inspeciton, maintenance and testing of Westinghouse generators:

Inspection

Inspect Stator Winding and Bracing Components

- Evidence of looseness or distortion
- Coil surface condition – clean as required
- Abrasion or cracks in insulation
- Evidence of corona
- Check blocking, hardware, and locking devices
- Inspect parallel rings for looseness
- Check stator slot wedges for looseness

Inspect Stator Core

- Evidence of looseness, mechanical damage or thermal damage
- Check tightness of core and clamping pressure of through bolts and building bolts

Inspection of Rotor

- Movement or overheating of slot wedges
- Movement or overheating of retaining rings
- Mechanical damage or overheating of rotor body and rotor teeth

- Rotor windings for copper distortion, condition of insulation, blockage of ventilation, block movement, and overheating
- Movement of retaining ring liner
- Inspect journals, bearings, coupling, blower assembly
- Inspect collector wear and recondition
- Check brushes and brush rigging

Inspection of Generator Frame Components

- Bearing bracket and gland seal rings
- Frame feet and grout
- Hydrogen cooler
- Internal gas ducts, ventilation seals and baffling

Electrical Maintenance Testing

Generator

- Insulation resistance test and Polarization Index – 500 V D.C. for ten minutes
- DC leakage voltage – dielectric absorption and overpotential test – 10 kV to 31 kV on each phase individually
- Measure D.C. stator resistance of each phase
- Insulation resistance of thru bolts – 500 V D.C. momentary
- Insulation of temperature detectors (RTD's) – 500 V D.C. – momentary
- Measure resistance of RTD's
- Measure D.C. rotor winding resistance
- Insulation resistance of rotor winding – 500 V D.C. for ten minutes
- Measure rotor pole impedance for shorted turns – 240 V A.C.
- Pressure test radial lead assembly (rotor) at 80 psig
- Perform stator core loop test and thermovision scan for damaged core laminations

Any time that the windings would need replacement, the new windings should be made with improved insulation material, that requires a small volume of insulation for the same dielectric properties and permits use of a larger cross section of copper in the windings. This increase in copper volume increases the load carrying capacity of the generator.

At scheduled opening of each generator, a visual inspection of the windings should be performed, in addition to normal dielectric tests, with particular attention paid to looking for cracks, or separation of the insulation and exposed unpainted surfaces. The exposed unpainted surfaces indicate a change in position of the windings.

The generator rotor retaining rings, used to support the centrifugal force of the rotor winding and turns, are susceptible to stress corrosion cracking in the

presence of moisture and other corrodants. Failure due to stress corrosion cracking have been found on retaining rings throughout the industry.

Current practice is to inspect the retaining rings for cracks by performing dye penetrant tests on the outside surface during major outages. Once cracks have been detected in a ring, the ring is not returned to service until the cracks have been removed.

At North Bangkok station the generator rotor retaining rings are generally nondestructively inspected for damage at 5 year intervals. The last inspection was performed on Unit 2 in 1999/2000.

A life extension study performed in 1986 for Unit 2 by Westinghouse came to the following conclusions:

- Unit 2 generator is an example of a good design, it has been well maintained and properly operated. The unit was found to be in good condition for its age and is, therefore, a prime candidate for continued operation as base load or cyclic mode.

- The condition of the insulated components was determined to be satisfactory for continued service until the next inspection in three to five years. However, it is expected that the insulation resistance may deteriorate with time. Westinghouse recommended to rewind the stator and the rotor should significant degradation of insulation be detected. The present rewinding technology has improvements in design features, material and manufacturing methods which reduce the operating temperatures at the windings and thus reduce losses and improve efficiency.

Although Westinghouse's life extension and rehabilitation study addressed the Unit 2 generator, the results and recommendations are similar for the other two units.

The application of magnetic material for construction of the North Bangkok generator retaining rings in Units 1 and 2 does not permit the use of ultrasonic testing to inspect the internal surface of the ring, as it is assembled to the rotor. This requires that the rings be removed from the rotor to permit dye penetrant examination of the internal surface, which greatly increases the outage time required to perform the inspeciton. Recent budget estimate from Westinghouse for replacement of each generator retaining rings is $1,000,000 for materials and engineering support, but exclusive of installation and transportation costs. Lead time is approximately 24 weeks from receipt of order. Based on available information on the condition of retaining rings, it is recommended not to replace generator retaining rings at this time. Instead, it is recommended to continue the nondestructive examination of the generator rotor retaining rings and ultimately

replace them with non-magnetic material satisfactory for ultrasonic testing. Unit 3 generator is equipped with non-magnetic rings and are, therefore, satisfactory for UT examination without removal.

When the unit operates through a speed cycle, the rotor teeth go through a compression to tension to compression load cycle. This is caused by the centrifugal loading of the rotor windings and the retaining ring as these loadings vary through the speed cycle. The stresses produced by the teeth cyclic loading are amplified by the stress concentration factor caused by a short radius connection of the tooth load bearing surface to the tooth body.

It is recommended the rotor tooth sharp radii be enlarged, by machining, to reduce the stress concentration factor. This work could best be accomplished at the next removal of the retaining rings for their inspeciton.

The North Bangkok generator rotor shafts were manufactured prior to the use of boresonic inspections as part of the process for insuring that the rotor body forging was free of significant material imperfections. The rotors should have both a bore magnetic particle and peripheral ultrasonic inspeciton at the next scheduled outage of Unit 1. This would be a step in assuring the structural integrity of the rotor material for the proposed life extension program.

A generator condition monitor used for early detection and warning of local overheating in a particular generator component is now commercially available. The monitor detects the presence of particles of insulation in the hydrogen coolant, which is indicative of the insulation of the windings. It is recommended to install generator condition monitors on all three units.

The existing generator protective relaying provides adequate protection against faults. However, it is recommended that a reverse power relay (Device 32) be added to trip the generator and turbine upon actuation. This relay detects power flow into the generator from the system, such as would occur if steam to the turbine is lost, and protect the turbine from overheating. It is considered a back-up protection to the mechanical devices normally provided to detect this condition.

2.3.10 Exciters

Each generator is provided with its own exciter unit. The Unit 1 and 2 exciters are of the brush type with shunt windings, rated 300 kW at 375 V, 880A and 900 RPM, driven by the generator shaft through a gear reducer. Each exciter is provided with a pilot exciter overhung on the main shaft and force cooled by air from the main exciter blower. The Unit 3 exciter is of the brushless, wound type, rated 330 kW at 250 V, 1,200 A, 3,000 RPM and is directly coupled to the generator shaft. Nearly all the excitation equipment is of the original Westinghouse Electric Corp. supply.

During March 1997 Unit 1 minor overhaul, a new exciter rotor was installed.

The equipment is in good operating condition, well maintained, and no major problems were reported. For the extended life of these units, all three exciters should be refurbished by cleaning, baking the winding insulation, re-varnishing, undercutting the mica insulation and machining the commutator bars. The voltage regulators should be replaced with new solid state devices. Replacement of the exciters with new static excitation systems is costly ($1,200,000 per unit plus transportation and installation cost, a recent Siemens/Westinghouse quotation) and not economically justified by potential maintenance savings.

During each future major outage, each exciter should be inspected including:

- Check commutator surface for grooving, burning or abnormal sparking. Recondition as necessary.
- Inspect brush rigging for proper pressure and abnormal wear or arcing.
- Check electrical kick neutral, and shift if necessary for good commutation and operating characteristics.
- Clean exciter winding and components of oil and brush dust
- Check exciter gear assembly for wear or gear tooth damage.
- Check pilot exciter.
- Insulation resistance test of armature winding – 500 V D.C. for one minute.
- Exciter field pole balance – 110 V A.C.
- Measure D.C. resistance of armature and field winding

2.3.11 Generator Auxiliaries

The generators are cooled with hydrogen gas at a pressure controlled between 0.5 to 30 psig (2 kg/cm^2). The hydrogen gas is kept from leaking through the ends along the shaft by the shaft sealing system.

A seal oil system provides sealing oil to the hydrogen gland seals and helps prevent the escape of hydrogen gas from the generator. It provides lubrication to the gland seals to help prevent seal wear, and provides a means of minimizing the amount of air and moisture entering the generator.

The operation of the hydrogen and seal oil systems will not be affected by the life extension. Available records indicate that the existing equipment has provided satisfactory service. However, experience with other similar units indicates that some of the components, particularly on the seal supply system occasionally need replacement. The improvements which have been made since these units were built make it desirable to replace some of the original equipment. Indeed, during March 1997 outage of Unit 1 and October 1997 outage of Unit 3 radial lead seal rings required replacement.

A hydrogen monitoring system should be installed on all three units. The system will use electronic transmitters to sense the generator hydrogen pressure, the generator fan differential pressure and the purity blower differential pressure. The output signals from the transmitters will be processed by the Control Panel for indication and alarms.

Dual tower gas dryers are recommended to replace the existing single tower units. The dual tower has two desiccant filled tanks that automatically switch from absorption to reactivation and eliminate the manual switchings from drying to reactivation cycle of the desiccant.

During the next major outage, the systems should be adjusted to make certain all controls are set correctly and are operating as specified. The diametric clearances of the hydrogen seals should be within the specified range of 4 to 6 mils.

2.3.12 Operating and Maintenance Records

This assessment of turbine-generators serving North Bangkok Units 1, 2 and 3 was made on the basis of the following records:

Unit running hours (Paragraph 2.1.2)
Number of hot, warm and cold starts (Paragraph 2.1.2)
Maintenance history (Exhibit 2-1)
Major component repairs or replacement during the last 10 years, as shown below.

Maintenance history of steam turbo-generators indicates that major overhaul inspections were conducted approximately every six years, while minor inspections were performed every year or two. Both type of inspections were conducted in accordance with manufacturer's recommended procedures. The most recent overhauls were major inspection of Unit 2 between November 6, 1999 and January 10, 2000 and minor inspection of Unit 3 conducted in March of 2000.

The records further indicate that past inspections identified needs for routine maintenance and replacement of wearable parts, occasional repair or replacement of turbine blades, bearing parts, seal strips, and similar items but have never revealed any signs of incipient catastrophic failure of any component. Generator tests confirm the insulation to be in good condition but identified some loose wedges requiring periodic tightening.

Heat rate performance tests conducted on Unit 2 in October 1999, immediately before the major overhaul, show turbine heat rate deterioration from the original guarantees of less than 2%. These results of tests conducted in accordance with ASME Power Test Code (PTC) 6, confirm the turbine to be in very good condition.

In 1988/1989 period, Burns and Roe, with Westinghouse assistance examined the condition of the turbine-generators and past maintenance records and made recommendations for certain component upgrades and replacement for the purpose of life extension and cycle operation. Many of these recommendations were implemented including major replacements as follows. Major turbine generator parts replaced during the last 10 years are:

Description of Renovation	Unit 1	Unit 2	Unit 3
Steam Turbine			
1. Nozzle Block & HP rotating blades	1994	1993	1994
2. Curtis blade row	N/A	1993 Changed first rotating and guide blade	N/A
3. IP rotating blades (1st – 3rd row)	N/A	1993	N/A
4. LP exhaust spray system	1994	1992	1994-1995
Generator/Exciter			
Exciter rotor	1997	N/A	N/A
Hydrogen Cooler Replacement	Feb 1997	June 1997	Feb 2000

2.3.13 Remaining Life Assessment

Service and operating history including number of hot, warm and cold shutdowns, rate of start, loading and shutdown give no indication that the remaining life of turbine generators is limited. Also, there are no recorded events, related to service or operation, which would suggest the existence of any flaws which would lead to a catastrophic failure of any turbine or generator components. However, to confirm the absence of defects in most critical components, specialized testing and analyses are required to supplement the analysis of operating and maintenance history.

Steam turbine rotors are among the most critical and highly stressed components in power generating stations. Lengthy forced outages associated with any rotor problems could impose severe economic penalties on the operating utility. In order to enable a rational life extension decision about steam turbines to be made, comprehensive borescopic examinations of turbine HP/IP, LP and generator rotors must be conducted, in addition to careful analysis of the unit operating history. Such rotor examination and inspection should include the following:

- Bore diameter measurements along the entire length of the bore to compare with the original as manufactured dimensions as well as with any measurements taken during previous overhauls.
- Borescopic surface examination (after bore surface preparation).
- Magnetic particle inspection of the entire bore surface.
- Ultrasonic inspection of the bore.
- Further non-destructive examination (NDE) as may be required based on previous examinations and inspections.

In addition to the above borescopic examinations of each shaft, turbine blading and stationary components should also be selectively examined by magnetic particle, penetrant and ultrasonic inspections. Mapping and dimensional verifications of critical components, insulation testing, inspections of generator wedges and retaining rings should also be performed during the inspection.

Unlike the high temperature HP and IP rotors, LP rotors are not subject to creep damage because the maximum temperature of operation is below the creep regime. However, LP rotors are highly stressed, largely by thermal transients that lead to low-cycle fatigue damage. High cycle bending fatigue, embrittlement and pitting corrosion are the major concerns.

Catastrophic failures of generator components are rare. The few historical examples are associated with the fracture of the retaining ring that holds the end windings of the rotor in place. Nevertheless, the extended outages which are occasionally caused by malfunction of generator major components, necessitate careful evaluation of current status and remaining life of these critical elements.

Turbine-generator manufacturers are generally well equipped to perform turbine rotor inspections. Siemens/Westinghouse, the original equipment manufacturer (OEM), would be a good candidate for this task. Siemens/Westinghouse's specification for turbine rotor interior inspections was presented to EGAT by letter of November 29, 1999.

Inspection results need be conservatively analyzed and applied to the assumed number of start-up cycles and load changes for the extended life period of 20 years after the repowering. Properties of shaft material, either actual by measurements on trepanned samples, or from Westinghouse provided data, including composition, fracture toughness, fatigue-crack growth rate and creep rapture properties are all elements of evaluation of life expenditures due to creep and fatigue. Computer software packages have been developed to generate the finite-element mesh, evaluate the flaws identified in boresonic inspections and analyze the current status of the rotor taking into consideration the effects of creep, fatigue, and creep crack growth.

Because of the critical importance of such inspection and assessment of rotor life extension before the final repowering commitment, it is recommended that the HP/IP and LP turbine rotors and those parts of the generator rotors, which are accessible for borescopic examination, be inspected by Siemens/Westinghouse or by a similarly qualified borescopic examination service during the scheduled outage of Unit 1 in year 2001. Unit 1 being the oldest of the three North Bangkok units, with the largest recorded number of equivalent operating hours, will provide a good indication of potential problems with any of the three steam turbines. The cost of the borescopic examination was included in the repowering budget.

Modernization of steam turbine controls by replacing the existing mechanical hydraulic governing/throttle valve controls with a digital electro-hydraulic system that can be integrated into a modern DCS systems is also recommended for the repowering option. Such modern DEH systems would be equipped with its own hydraulic system using a fire-resistant fluid, separate from the existing turbine-generator lubricating oil system. Steam turbine upgrades with modern DEH control systems were included in the cost estimates of repowering the existing turbines.

2.4 Chemical Equipment and Systems

2.4.1 Make-up Water Treatment

Water from the river is pumped for pretreatment into two clarifiers followed by two sand filters and into two 28m^3 pretreated water storage tanks. Aluminum sulphate, soda ash and flocculants are added into the clarifiers. Two deep well pumps are used to supply raw water to the demineralizer plant when the river water is high in chlorides during summer months.

Make-up water for the boilers is taken from the pretreated water storage tanks. The pretreated water containing about 80 ppm TDS is further treated in the demineralizing plant, which consists of two trains of cation-anion exchangers with an interstage degasifier followed by a mixed bed polisher.

Each train can deliver 20 t/h, when both trains operate in parallel their output is about 28 t/h. Resin regeneration is needed after each 400 tonnes of water produced when supplied with pretreated river water and 600 tonnes when fed with well water. Resin regeneration is by 98% sulfuric acid and 25% solution of sodium hydroxide. The demineralizing capacity meets the current boiler needs. The equipment operates reasonably well and is in good operating condition. It can satisfy the make-up water requirements for the HRSGs.

New gas turbines come equipped with dry low NOx combustors. However, when burning light fuel oil, water injection is needed to maintain NOx emissions in compliance with regulations. The uncontrolled NOx emissions from the existing MW 701D gas turbines from Nong Chok, which are not equipped with dry low NOx burners exceed the allowable emissions with both gas and fuel oil firing.

Among the available options to reduce NOx emissions from gas turbines are the following:

- Injection of demineralized water or steam into the gas turbines
- Installation of catalysts in the HRSG and an ammonia feed and injection system

Injection of water or steam will lead to a substantial increase in demineralized water consumption, well above the capability of the existing demineralizing plant.

At full load, the three MW701D gas turbines require about 100 t/h of demineralized water for NOx control. To satisfy the demineralized water needs with the MW701D gas turbines, a new water treatment plant would be installed as further described in Section 5 The capacity of the added demineralization plant, if the MW701D gas turbines are used, should be about 100 t/h. As backup for oil firing in new gas turbines that have dry low NOx burners, the demineralized plant capacity should also be about 100 t/h. The maximum capacity of the existing system is 28 t/h. The installation of a catalyst in the HRSGs which would preclude the need to increase the capacity of the demineralizer system was also considered but was rejected as too expensive.

2.4.2. Circulating Water Treatment System

The existing chlorination equipment located in the intake structure building should be overhauled and used in the future repowered plant.

Injection of chemicals will be needed to treat the cooling water processed in the new cooling tower. The chemical additives will be injected in the basin from where the cooling tower circulating pumps take suction. A set of feed tanks and injection/dosing pumps will be needed. The type of chemicals and the quantity to be injected will be determined during the detailed design phase of the project.

2.4.3 Condensate and Feedwater Treatment

Originally the North Bangkok units used sodium sulfate injection into the condensate and feedwater. Later it was replaced with hydrazine together with hagamine. Phosphates are injected into the boiler drum for pH control.

For repowering, the entire condensate and feedwater chemical treatment system should be overhauled, the injection pumps replaced and new lines provided for injection of the oxygen scavenger and neutralizing amine into the rearranged condensate and feedwater system. Each feed system should include a solution feed tank with mixer, a closed measuring tank and two 100% capacity adjustable stroke metering pump. To the extent practical, the existing solution feed tanks and pumps could be reconditioned and used.

2.4.4 Waste Water Treatment

The waste water neutralization system will collect all chemical drains, resin backwash and rinse water, HRSG blowdown, etc. A new holding pond with a capacity to hold not less than 24 hours of waste water produced by the plant, will be built. The water streams collected in the holding pond will be mixed with chemicals to neutralize (pH 6.8 to 7.2) and settle out suspended solids from the waste water prior to discharge into the river. Prior to discharge, the water will be sampled to assure that the water discharged into the river through the circulating water discharge canal meets all regulatory requirements.

A smaller waste neutralization pond of about 100 m^3 capacity is planned to be built near the demineralizer plant for pH adjustment of the resin backwash water, prior to discharge into the main holding pond.

2.5 Major Electrical Equipment

2.5.1 General

Each of the three generating units is connected to the dedicated Station 69 kV switchyard via its main step-up transformer. This Station 69 kV switchyard is interconnected through the MEA 69 kV Substation to EGAT's 69 kV and 230 kV Substations.

Each generating unit has its unit auxiliary transformer that steps down power from the generator voltage of 13.8 kV to the medium auxiliary voltage of 3.3 kV.

One auxiliary reserve transformer provides start-up power from the Station 69 kV switchyard to the 3.3 kV system for any of the three units.

One emergency reserve transformer, which is connected to the EGAT 69 kV substation through the EGAT 11 kV switchyard, provides reserve/standby power to the 3.3 kV system for any of the three units.

The plant main electrical auxiliary system consists of: a 3.3 kV medium voltage system, 416V and 240V low voltage system, DC and UPS systems, and an emergency diesel generator system.

The office areas of the plant have dedicated power supplies from the EGAT 11 kV switchyard. The following plant electrical systems were investigated and assessed for the repowering configurations proposed for this plant:

- Station 69 kV Switchyard
- Power Transformers
- Auxiliary, Reserve and Emergency Reserve Transformers
- MV Switchgear
- LV Switchgear
- LV Motor Control Centers
- Motors
- DC and UPS Systems
- Emergency D/G system
- Relay Protection and synchronizing
- Wires and Cables

The analysis and interpretation of all collected data leads to the conclusion that overall, the electrical equipment is in good condition and appears adequately maintained for the plant life extension under the proposed repowering configurations.

The plant electrical auxiliary systems can be maintained to service the steam turbine generators and associated auxiliaries together with all other auxiliaries deemed necessary to support the proposed repowering configurations.

The loads that are eliminated would be deleted from the existing electrical system.

Specific comments and recommendations are included in the discussion that follows.

2.5.2 Station 69 kV Switchyard

The Station 69 kV Switchyard is dedicated to the plant interconnection to EGAT's 69 kV and 230 kV systems throughout the MEA 69 kV substation.

This switchyard consists of main and transfer buses, three power circuit breakers for three main transformers, one power circuit breaker for auxiliary reserve transformer, one tie power circuit breaker between main and transfer buses, and one power circuit breaker to connect the main bus to the MEA 69 kV substation. The transfer bus is connected to the MEA 69 kV Substation utilizing a disconnect switch. The switchyard is furnished with a full complement of disconnect switches, CCVT's, metering CT's, etc.

This switchyard is still functional, but would require upgrading to support repowering. As EGAT is planning on replacing the 69 kV system with a 230 kV system, the existing 69 kV switchyard and the STG step-up transformers will be removed and replaced by a new 230 kV GIS type switchyard as described in Section 5.1.2 and new step-up transformers to match the 230 kV voltage level.

2.5.3 Power Transformers

Each of the main transformers are rated as follows:

Unit 1: 105 MVA, 13.2/69 kV, FOA, 50 Hz, 55°C, NLTC, three- phase, Westinghouse

Unit 2: 90 MVA at 55°C, 100.8 MVA at 65°C, 13.2/69 kV, FOA, 50 Hz, NLTC, three-phase, Westinghouse

Unit 3: 73/97/120 MVA at 55°C, 13.8/69 kV ONAN/ONAF/ONAF, 50 Hz, NLTC, three phase, Siemens

All three unit auxiliary transformers are rated 7.5 MVA, 13.8/3.3 kV, 3-phase, two-winding, 50 Hz, OA, 55°C, NLTC, Westinghouse.

The auxiliary reserve transformer is rated 7.5 MVA, 69/3.3 kV, 3-phase, two-winding, 50Hz, OA, 55°C, NLTC, Westinghouse.

The emergency reserve transformer is rated 7.5 MVA, 11/3.3 kV, 3-phase, two-winding, 50 Hz, OA, 55°C, NLTC, Westinghouse

There are no fire walls between transformers. The plant adjacent wall has a one hour fire retardant rating. All transformers are provided with the deluge, water spray, fire extinguishing systems.

As part of preventive maintenance program, every 5 years all power transformers undergo an extensive inspection and testing. Every 6 months the oil is tested for dielectric strength. When necessary, the oil is filtered or replaced to prevent breakdown of insulation due to moisture.

With the exception of the Unit 1 and Unit 3 main transformers, the plant repair records do not indicate recent repairs and replacements with the exception of routine maintenance and testing.

Due to the poor performance of the Unit 1 main transformer, it was replaced by the Unit 3 Main Transformer during November 1997. Unit 3 was furnished with a new main transformer manufactured by Siemens during October 1997.

To date, very few problems have been experienced with the power transformers except as explained above. To assure continued service with high reliability, it is recommended that, on an annual basis, each transformer be tested including applied potential tests in order to examine the condition of the winding insulation.

It should be noted that due to frequent lightning strikes, up to 150 times a year, it is especially important to maintain and inspect periodically the lightning arrestors in order to minimize the possibility of transformer damage.

All station transformers (3300/416V) for all three units were replaced with dry type transformers to eliminate PCB-oil filled transformers. The work was performed during June-July 1994 (Unit 1), October 1994 (Unit 2) and December 1994 (Unit 3).

2.5.4 Medium Voltage Switchgear

One medium voltage switchgear line-up supplies 3.3 kV auxiliary power for Unit 1 and distributes emergency reserve and startup power to all three units from either of the two independent sources (11 kV switchyard or 69 kV switchyard respectively) via step-down transformers. One MV switchgear line-up is furnished for each Unit 2 and Unit 3 to supply power to the associated auxiliary loads.

Unit 1 and 2 medium voltage switchgear line-ups are located in a common electrical room on the mezzanine floor.

The Unit 3 MV switchgear line-up is located in a dedicated electrical room on the Unit 3 mezzanine floor.

All incoming lines and tie breakers are rated 2000 amperes continuous and feeder breakers are rated 1200 amperes continuous. All 3.3 kV switchgear are manufactured by Westinghouse.

Plant repair records do not indicate any major switchgear repairs with the exception of normal maintenance items such as replacement of auxiliary relays, contacts etc.

Major renovation work was performed when the plant controls were replaced by installing Westinghouse WDPF control systems.

Considering the age of the equipment it is anticipated that the required maintenance will increase, especially for moving parts such as contacts and solenoids.

It is recommended that a reconditioning program be initiated for all switchgear units. This program should include: equipment disassembly; cleaning, replating, repainting and replacement of damaged metal parts; cleaning, testing, recoating or replacement of phenolic parts; reassembly and electrical and mechanical testing.

In addition, it is recommended that spare 2000 ampere and 1200 ampere breakers be made available to ensure continued operation when a breaker is taken out of service for maintenance or repair.

It was reported that the plant lacks available spare circuit breakers and that new replacement circuit breakers could not be ordered because the existing breakers are obsolete.

After repowering, several circuit breakers would become spares because of the elimination of several 3.3 kV loads.

The relays associated with the 3.3 kV switchgear are also reported to lack available spare parts.

2.5.5 Low Voltage Switchgear and Motor Control Center

Each unit is provided with a low voltage switchgear rated 416V, 3-phase, 50 Hz, 1600 ampere bus. A fourth switchgear, same rating as the other three, supplies reserve power to the entire plant. All switchgear line-ups are Westinghouse with drawout, air circuit breakers.

Motor control centers (MCC) are also Westinghouse units equipped with molded-case circuit breakers for feeder loads and combination circuit breaker/magnetic starter for motor loads.

The MCC's in the water treatment building need reconditioning work for plant life extension.

No major problems have been experienced with the equipment. Repair work for the low voltage switchgear consisted primarily of replacement of main and auxiliary coils and contacts, and other routine maintenance items.

Repair work for motor control centers included replacement of combination starter coils and contacts.

The low voltage switchgear and motor control centers can be made adequate for the desired extension of plant's life. Effective maintenance of low voltage circuit breakers is essential for prolonging the usable life of the switchgear.

The inspection and maintenance procedures should include the following:

- Inspection of primary fingers for excessive wear, burning or discoloration, broken or missing springs. Clean out dirt and dust.
- Inspection of arc chutes for cracked, burned or broken parts.
- Cleaning of main and arcing contacts and, if necessary, resilvering contacts.
- Closing of the breaker mechanically with arc chutes removed to check contact action and alignment. The breaker should be opened and closed several times to determine that operation is smooth and without binding.
- Lubrication in accordance with manufacturer's instructions.
- Tightening of all screwed and bolted connections.
- Blowing dust and dirt from breaker and arc chutes.
- Inspection of the breaker trip mechanism and the various trip-device mechanisms for proper operation, including the breaker position indicator.
- Electrical tests of breaker trip devices: pick-up current, timing, resettable delay and instantaneous trip.

For motor control centers, a combination of regularly scheduled inspection and tests and availability of spare circuit breakers, contactors and overload relays should assure continuous operation for the extended life of the plant.

It is recommended that the thermal type breakers be tested every two years. The overload relays should be checked for proper operation through electrical testing. Over a period of time, these relays get out of adjustment, corrode or otherwise become inoperable.

After repowering, several LV circuit breakers and combination starters would be made spares because of the elimination of several 416 volt loads.

2.5.6 Motors

In general, most motors are squirrel-cage, induction type designed for full voltage starting.

Large plant motor drives include 1000 HP (Units 1 and 2) and 1250 HP (Unit 3) boiler feed pumps, 900 HP induced draft fans, 300 HP and 700 HP forced draft fans, 300 HP circulating water pumps, and 250 HP pulverizers. (The pulverizers, provided for Unit 1 only, are no longer in service). The induced draft fans, forced draft fans, and gas recirculation fans (Unit 3) will be abandoned in the repowered configuration.

All motors 250 HP and above are rated 3000 volt and are fed from the 3.3 kV buses. All motors below 250 HP are rated 380 volt and are supplied from the 416 volt switchgear or motor control centers.

The insulation level of all medium voltage motors in Unit 3 is "Class F." Motors in Units 1 and 2 have "Class F" or "Class B" insulation.

It was reported that the Boiler Feed Pump Motor 1A had a stator failure and was replaced with a new motor. The failed motor was repaired and is a spare.

Due to a shaft guide that pulled off the stator winding, Boiler Feed Pump Motor 3B was damaged and had to be sent for repair.

The thrust bearings have been replaced in the motors of the Condensate Pumps and Circulating Water Pumps.

The plant air compressors were replaced by a new rotary compressor.

Most repair and maintenance work for the motor drives has primarily consisted of the replacement of expandable parts such as bearings.

Scheduled maintenance of medium voltage motors includes megger and high potential testing and replacement of bearings during every major overhaul.

Where drives are operated in a primary-standby configuration, they are alternated weekly to equalize the wear of motors. The existing motor drives are suitable for this duty. However, some decrease in reliability can be expected if the motors are cycled on and off frequently. The effects of cycling can be minimized by more frequent inspections and preventive maintenance.

The total service life of a motor depends not only by its hours of operation, but also by its number of start-stop cycles. Although frequent starting duty affects all station motors, it is of primary concern for large motor drives. Smaller motors have substantially lower inertia (WK^2) and their smaller mass permits rapid dissipation of heat. Furthermore, smaller "off-the-shelf" motor drives are generally designed for a wide range of applications including frequent starting duty. Therefore, the following discussion will be limited to large motor drives.

Bearings

Frequent starting of large motors not designed for such application can in most cases result in increased bearing wear. This is especially true for motors provided with shaft driven lubricating pumps which must rely on residual oil film for initial lubrication or starting. For large horizontal shaft motors with shaft driven pumps, this effect can be readily minimized by the installation of a small auxiliary lubricating oil pump which provides bearing oil pressure prior to machine starting. The oil pump is generally complemented by oil pressure switches in each bearing which are wired in series with the 3.3 kV circuit breakers closing coil to provide motor starting permissive interlocks. Other advantages of this arrangement are reduced starting torque requirements, backup lubricating oil protection and readily permitting installation of low bearing oil pressure alarms for monitoring during operation.

Large vertical motors are less sensitive to initial bearing lubrication, since the inherent design of Kingsbury and spring type segmented bearings provide for rapid lubrication and starting.

Rotor

One form in which starting stresses appear in induction motors is in rotor winding heating. The degree of heating which occurs will be a function of the inertia of the rotor and load, starting time and starting torque requirements.

Rotor heating during starting becomes even more critical for motors started frequently, since motor temperatures may be at or near rated temperature rise prior to starting. In this event, the temperature increase during starting may result in excessive temperature rise exceeding the insulation rating.

NEMA standard MG1 requires that motors be capable of the following starts:

- Two starts in succession, with the motor coasting to rest between starts, and initially at ambient temperature, or

- One start with the motor initially at a temperature not exceeding its rated load operating temperature.

The overall plan is to keep the N. Bangkok units on line most of the time while operating between minimum and maximum load. Since the repowered plant will operate in a base load mode, plant startups and major load changes should be infrequent, perhaps only 25 to 50 per year. Therefore, the cycling of motors should not be a problem.

2.5.7 DC and UPS Systems, D/G Emergency Systems

An emergency diesel generator set rated 550 kW, 0.8 PF, 3-pahse, 1500 RPM, 50 Hz, 400/231V, is connected to the 416V switchgear of Units 1, 2 and 3 and the Plant Reserve Switchgear. The diesel generator is designed to provide electric power to the turning gear motors, T-G bearing oil pumps, H_2 seal oil pumps, turning gear oil pumps and battery chargers, etc., during blackout.

The DC system has been upgraded with installation of a 600 A/h battery set for each of the three Units (two in the 1980's and one in the 1990's). Interconnection between the batteries has been provided such that one of the 600 A/h sets can supply DC power to any two units when required.

The associated battery chargers are provided for recharging the batteries. The DC panels are provided for each unit.

Each unit has a UPS system furnished with inverter, regulating transformer, and associated battery and panels.

The UPS systems are new additions to the plant required by the installation of WDPF control systems.

The batteries are of lead antimony acid type which have a normal life expectancy of 20 to 25 years. Because all batteries have been replaced since 1985, it is reasonable to expect that they would function adequately for the next 10 to 15 years.

The following inspection and testing program is recommended for the batteries and battery chargers to be performed at least once a month:

- Inspect racks for structural soundness.

- Inspect batteries, chargers and cables for tightness of terminations, integrity of insulation, and absence of corrosion.
- Examine level of sediments in the battery cell.
- Examine the growth of the plates internal to the cell.
- Test specific gravity of battery.
- Test the float voltage of each cell and the battery as a whole.
- Test output of charger (volts and amps).

It is recommended that adequate ventilation be provided to the battery rooms to insure adequate operation and life extension of the batteries.

2.5.8 Relay Protection and Metering

The protection relay panels for all three units are located in Unit 1 Control Room. The relay panels are located behind the plant control panels. The relays are the original relays except for new additions: frequency relays (81), negative phase sequence relays (46G), and synch-check relays (25).

There is one synchronizing panel for Units 1 and 2 located in the Unit 1 Control Room. In addition, the Unit 1 Control Room has all the controls for Units 1 and 2.

Unit 2 Control Room has controls for Unit 3 as well as the synchronizing panel for Unit 3.

All three units are manually synchronized to the 69 kV system.

The dispatching of power generated by all three units is by telephone communication.

Considering the age of the equipment, it is anticipated that the required maintenance will increase, especially for moving parts such as contacts and coils.

In addition, the protective relays are obsolete and parts would not be available.

It is recommended that the relays be replaced with new state-of-the-art relays as required by plant operation.

2.5.9 Wires and Cables

The ratings and type of cables are as follows:

5 kV power: Type RA, rubber insulation, neoprene jacketed, armored with overall PVC jacket.

600V power: Type RN, rubber insulation, neoprene jacketed, metallic tape protected with overall PVC jacket.

600V control: Multiconductor.

There is no segregation of cable routing in trays; power, control and instrumentation cable are routed together.

Although sporadic cable replacement has taken place in both medium and low voltage systems, there have been no major generic cable failures. In addition, the plant practice of megger tests for feeders during every overhaul helps to detect cable problems prior to failure, thereby eliminating forced emergency repairs. Major cable replacements during the past two years included the outdoor 3.3 kV feeder to the ID fan of Unit 1.

Although the integrity of plant wire and cable is essential to unit performance, the absence of generic problems indicates a high quality of the cable used and, therefore, plant rewiring cannot be justified.

It is most likely that the cables will experience failures in increasing numbers during the extension of plant life. However, the effects of these failures can be minimized by a more frequent megger testing of feeders and by maintaining an adequate stock of commonly used sizes for all voltage levels. Since cables are purchased locally with a relatively short delivery time, large quantities of stock are not required.

It is recommended that any new instrumentation and controls added for repowering of the plant use instrumentation cables routed in a new tray system designated for instrumentation.

2.6 Civil/Structural

2.6.1 Powerhouse

The powerhouse houses the steam turbine generators, the feedwater and condensate pumps and heaters, the surface condensers, air compressors, control rooms and offices. The building is 403 ft. long, 187 ft. wide and 80 ft. high. It has a reinforced concrete substructure resting on reinforced concrete piles and a masonry superstructure. The exterior walls are made of a concrete frame and brick wall with plaster. Interior walls are made of brick with plaster. The roof is supported by a steel frame. The floor on the operating level is made of terrazzo and tile in the control rooms and office areas. A 125 ton overhead bridge crane serves the turbine generators and their auxiliaries.

The turbine generator units are supported by massive reinforced concrete foundations, supported on concrete piles. The building is in very good condition and can house the steam turbine generators and their auxiliaries for 20 more years. The bridge crane is also in good condition.

The powerhouse roof leaks and needs repair or replacement of the areas that have deteriorated.

2.6.2 Intake Structure

The building houses the circulating water pumps, traveling water screens, screen wash pumps, service water and fire water pumps, chlorination equipment and their electrical motor control centers.

The building is made of reinforced concrete foundation and columns and masonry walls. A 3 ton gantry crane serves the pumps and traveling water screens. The walls and bottom of the intake basins (two per unit) are made of reinforced concrete.

It is recommended that the water be pumped out of individual basins sequentially and the entire area that is submerged in river water be cleaned and inspected. The steel components should be cleaned of rust, repaired, and repainted. Concrete that has deteriorated (cracked, chipped, corroded) should be repaired.

2.6.3 Discharge Tunnel and Discharge Canal

The heated circulating water is discharged into reinforced concrete tunnels. During a complete plant outage, the tunnels should be inspected and any damaged concrete repaired. This can be done during the outage for changeover to combined cycle operation. The open discharge canal is lined with concrete and appears in good condition.

2.6.4 Water Treatment Building

The water treatment building measures 35 ft. by 73 ft. and is 23 ft. high. It is made of masonry with white concrete and built-up roofing. The building is in good condition. There is no room to install the additional demineralization capacity that will be needed for water injection into the gas turbines. The new equipment will have to be located elsewhere and could be located outdoors with a weather protection roof.

2.6.5 Fuel Oil Storage Tank Area

The area currently occupied by the fuel oil tanks will be used for the gas turbine generators, HRSGs and their auxiliaries. The existing fuel oil tanks will have to be demolished, together with their supporting foundations, piping, transfer pumps and accessories.

Since oil may have seeped into the ground, the entire area under the storage tanks may have to be excavated and the contaminated soil removed and disposed of.

2.6.6 Soil Conditions for New Foundations

There are no recent test borings in the fuel oil storage area. However, in September 1997, borings were performed in the general area as part of the transmission system expansion. The boring logs indicate that from the surface down there is a 10m thick layer of dark gray, wet, very soft silt. Below this layer are several layers of wet, soft, clay, silt and silty sand to a depth of about 18m. Below these layers is very stiff, medium plastic silty clay with standard penetration test results of over 20 blows/ft.

It is expected that piling for new foundations will have to be about 25 meters deep. However, new test borings are recommended in the specific area where heavy loads from the gas turbine generators and HRSGs will be placed in order to confirm the subsoil conditions in the area and determine the piling requirements.

2.6.7 Demolition of Existing Steam Generators

In order to provide space for the new HRSGs in close proximity to the steam turbines, the existing oil fired steam generators would be demolished and removed. Demolition will include the steam and feedwater piping, forced draft fans, stacks, ash silo, coal conveyor gallery, steel structures and auxiliaries.

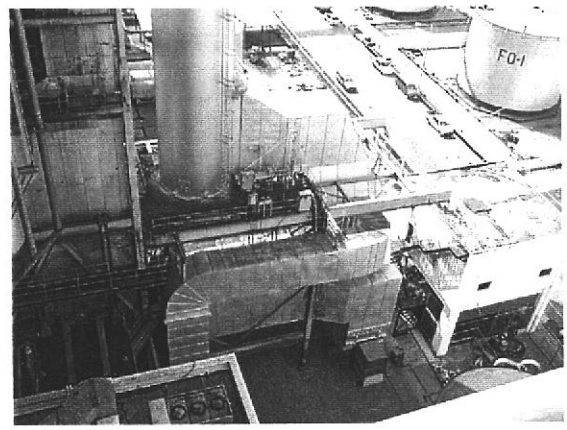

Demolition of the steam generators and of their auxiliaries is included in the repowering cost estimates.

2.7 *Instrumentation and Controls*

2.7.1 General Instrumentation and Control Equipment Description

Presently all three North Bangkok units are controlled using an array of different types of hardware. There have been selected upgrades throughout the plant to more modern controls while some controls, like the turbine mechanical governors, still are plant original components. There has been the incorporation of a Westinghouse Distributed Control System (DCS) into the plant controls about five or six years ago and it coexists with the close-to-original hardwired and pneumatic controls. Primary control is from main control rooms. There is a common control room for Units 1&2 and a separate control room for Unit 3. Both of these control rooms, as can be seen in the Unit 3 Control Room shown below, have been modified to incorporate the DCS consoles while still maintaining the original control boards.

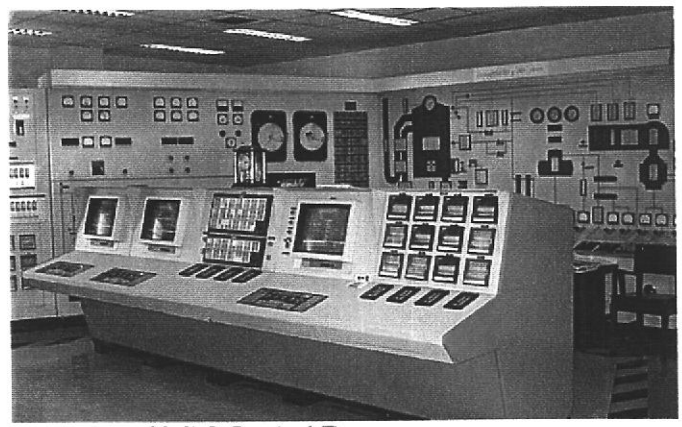

Unit 3 Control Room

Most essential plant operations can be performed from the DCS console via keyboard controls. In addition, there are selected crucial hand-auto (H/A) stations, trip pushbuttons and important hardwired alarms also located on the consoles. There are other controls and indications located behind the DCS consoles on the original control boards. They include vibration monitoring, station service pump controls (also controlled from the DCS), turbine raise/lower controls (also possible from the DCS) and controls associated with electrical generation.

Important pieces of equipment, e.g. condensate pumps, are typically controlled from the DCS, with start/stop command contacts wired to the associated switchgear or MCC. Feedback is typically provided for both the "run" and "failure" condition. Important process measurement interlocks, for example "low hotwell level" associated with the condensate pumps, may also be wired into the DCS and used in the equipment control logic.

There are also a number of process monitoring transmitters, including temperature elements, wired into the DCS and available to the control room operators. Most process inputs are derived from transmitters that have been added since the plant has been built. There are, however, a number of older pneumatic loops, such as D/A overflow, still in operation.

One area where there has been no major controls upgrade is the turbine governor. All three units continue to be controlled by mechanical governors, although there have been some upgrades to the tripping mechanism, adding pressure switches and solenoids to drain the control oil on trips. There is no remote dispatching of these units, only raise lower controls from the DCS/control room.

There are also a number of supporting systems, such as control air, which are covered below. Many of these are controlled locally. Only those systems that would be associated with continued operation after the repowering will be addressed.

2.7.2 Distributed Control System

All three units have been modified approximately five or six years ago, with the addition of a Westinghouse WDPF distributed control system (DCS). For each unit there are three CRT's with keyboards as the primary operator interface. There are also 8 (or 10, depending on the unit) crucial H/A stations, that operate in parallel with the keyboard controls, that are located on the consoles for control of feedwater and other boiler control loops. In the electronics rooms there are typically redundant distributed processing units (DPUs) for unit control, plus additional drops for an historian, logging, a VAX and an engineering workstation. It was reported that neither the VAX nor the historian was properly operating.

Unit 1&2 Control Room Consoles

The hardware is one of the earlier versions of this line, identified as level 7. Although Westinghouse still supports the WDPF system, it no longer is their primary line of DCS hardware, having been replaced by the "Ovation" line. This will, in all likely hood, result is a rapidly diminishing level of support. There are also some hardware problems that are occurring, not directly from WDPF equipment failure, but from adverse environmental conditions being encountered in the electronics room. (See 2.7.5 below).

Physically, each unit is operated by separate and independent control systems, without interconnections between units. There is a common control room for Unit 1 and 2 that has a DCS console for each unit and a separate control room for Unit 3 with one console. Each console includes three operator CRT/keyboards, hardwired alarms, crucial H/A stations, trip push buttons and pen recorders.

There is a common electronics room for Unit 1 and 2 on the mezzanine level where the supporting electronics are located. For Unit 3 the electronics are located in an area behind the control room.

The present control system is able maintain unit control, although with limited automation of power generation when considering the present governor interface. As support for this line diminishes, maintaining this hardware will become more difficult, particularly in prolonging a supply of spare parts. Discussions with Westinghouse noted that, even now, replacements for the operator CTRs are already a problem. Westinghouse indicated that it is feasible to replace the operator interface components (CRT and keyboards) and the processing units (DPUs) in their entirety with "Ovation" components while maintaining the input and output cards (Q-line I/O). This alternative could be evaluated if the physical electronic room layouts and similar I/O wiring routings are maintained.

2.7.3 Turbine Controls

The control of the turbines have not been significantly modified nor upgraded from the original installation. Presently the turbines are controlled via a mechanical governor system. Changes that have been incorporated include replacement of the mechanical turbine trip devices with multiple pressure switches plus the addition of operator trip push buttons, and raise lower control from the DCS. A new vibration monitoring system has also been added.

In the present design, there is only one oil system for both lubrication and control. This leads to fouling of the (control) oil, resulting in wear and degraded control.

Previously, Westinghouse made an evaluation and proposal to upgrade the governor control system. It pointed out problems and concerns with the present system including a lack of stability when the control valves are at positions other than 0% or 100%, load fluctuation, and unbalance between left and right steam chest valving. It also noted that these conditions will worsen with age, exacerbated by the continued utilization of a common oil system.

The proposed upgrade would add one electro-mechanical actuator to each servomotor and one to each throttle valve. They would be controlled with electronic signals from additional distributed processing units, DPUs, which would be added to the DCS. This would provide enhanced control of the turbines, providing added protection and control functions. To date no action has been taken with respect to this upgrade.

Control of these actuators would be implemented in a new control system, which may be a stand-alone system or additional components added to the plant DCS. In either case, turbine control enhancements would result from the upgrade,

providing safer, more efficient and cost effective operation. Typically the new controls would incorporate features associated with:

- Automated and improved startup and loading
- Better speed and load control
- Capability for dispatching
- Improved protection functions
- Testing capability
- Automatic synchronization capability

In addition, since the turbines are operating in an extended life situation, turbine rotor stress monitoring components should also be provided.

Associated with this modification, a separate control oil system would be incorporated, separating it from the lube oil system. The existing lube oil system could continue to function. Present lube oil controls are implemented locally with a few DCS monitoring points. These could remain somewhat as is with some additional DCS control and monitoring. A similar control situation exists with the generator H_2 seal oil system and a similar recommendation to add additional DCS control and monitoring is suggested.

There are other selected monitoring points associated with the turbine that input the DCS. These include the monitoring of first stage pressure, LP exhaust pressure and temperature, bearing oil drain temperatures, steam chest and turbine metal temperatures. The points that are monitored are legitimate but somewhat minimal. Units 1 and 2 have very few metal temperature monitoring points and there is no monitoring of cross over steam on any unit. Additional points should be added and monitored by the plant control system.

There has been an upgrade to a Bentley Nevada Turbine Supervisory Instrumentation system which includes:

- Turbine speed
- Turbine vibration, each bearing, one axis
- Rotor position
- Expansion
- Differential expansion
- Eccentricity
- System alarms to the DCS

The present system can be maintained after the repowering.

2.7.4 BOP Controls

For the purpose of this study, BOP controls will include the instrumentation and control devices, besides the DCS and turbine controls, directly associated with controlling the main process components to support the repowering.

Throughout the condensate and feedwater system, the instrumentation is a combination of upgraded electronic transmitters and elements and older pneumatic devices.

Electronic loops are used for the major controls such as D/A level control and feedwater control, while pneumatic loops are used for loops such as boiler feed pump recirculation and D/A over flow.

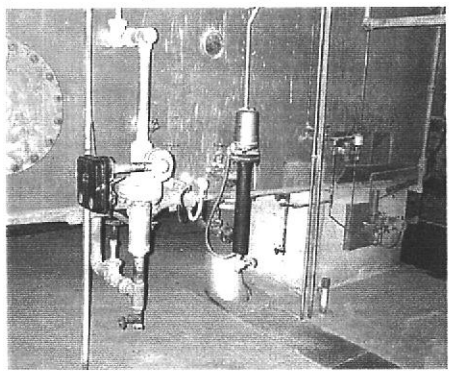

Condenser Instrumentation

There are also numerous other electronic transmitters and temperature elements installed in the main process lines that provide input signals into the DCS. Most devices have been wired first to junction boxes and then from the junction box to the DCS. These instruments appear to be in reasonable condition.

The pneumatic devices also appear to be functioning but are implemented in an older technology and the components may be more difficult to maintain in the future.

Most control valves, externally, appear to be in good condition. It would be considered prudent to inspect the valves, including the internal components, and to rebuild as necessary.

Although there has been a fair amount of instrumentation added that allows for remote monitoring and control; there still appears to be a reliance on operator observation and response. Some important points, such as the discharge pressure on individual condensate and boiler feed pump, did not are appear to be monitored in the DCS. Measurements such as these could be used to both provide increased operator awareness of process conditions and also be utilized in enhanced equipment logic. It would be recommended that some additional instrumentation be added to allow for more automated monitoring and protection of major pieces of equipment.

There are also many local gauges, however many of them should be replaced.

2.7.5 Support Systems

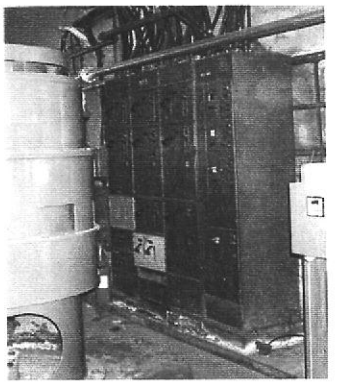

Intake Building MCCs

In addition to the BOP instrumentation and controls, there are various other systems that would be needed after the repowering to support the cycle.

A short distance from the turbine building is the intake structure located on the Chao Phraya riverbank, which contains the pumps and other equipment, associated with the various auxiliary water systems. Located in this building are the following:

- Auxiliary Water Cooling System- This system includes four service water pumps, which provide auxiliary cooling and service water to all three units. They are controlled from the control room and can be manually controlled from local MCCs.
- Circulating water pumps – There are two circulating water pumps for each unit which are controlled from the DCS via switchgear which is located in the plant.
- Traveling Screens – There are two of each per unit and they are controlled from local MCCs. There is no monitoring of differential level.
- Screen Wash Pumps – There are two for each unit and they are controlled from local MCCs and Switchgear in the plant.
- In addition there is also a chlorinating system for the intake water and a fire pump.

Except for the circulating water pumps, the overall method of control in this area is local manual, operating the pumps from the MCCs or Switchgear. There is also very little monitoring or logic utilization of process parameters in the DCS and therefore no automatic backup and switchover should a component trip or fail. There is no monitoring of bearing temperature or vibration on the large pumps/motors.

Water treatment is located in another nearby building. The neutralization system is located across the street from this building. There are independent local control panels that utilize discrete electrical control components. They appear to be functioning in an acceptable manner.

Control Air and Service Air - Both systems operate with local independent packaged control systems. In 1998 new Atlas Copco instrument air compressors were installed servicing all three units. Both service and instrument air systems are locally controlled, however there is DCS monitoring of header pressures. The system controls appear to function acceptably and are such that they could be maintained or modified independent of the repowering, however system capacity would need to be checked against the selected repowering alternative.

2.7.6 Overall Instrumentation and Control Assessment

The overall assessment of the existing instrumentation and controls at the North Bangkok Units can be summarized as follows:

- A complete new turbine governor control system and actuators should be provided to support the proposed operating modes, extend turbine life, as well as to provide enhanced operation and protection. This could be a stand alone system or could be incorporated into DCS.

- Although it may be feasible to somewhat extend the life of the existing DCS with a major upgrade, it would not coincide with the proposed extension to the life of the unit. Rapidly diminishing support for the present system would result in a need to replace the existing WDPF system in the not too distant future. In addition, it is unlikely that the existing controls will remain in the same physical configuration, i.e. one control room for Units 1 and 2 and a separate control room for Unit 3. Accordingly, we recommend to install a new control system which would lend itself to the integration of the turbine controls as well as ability to have a coordinated system among the new equipment (CT and HRSG) as well as between units.

- Other instrumentation and controls associated with both BOP and other supporting equipment is acceptable but minimal in many cases. Additional monitoring and control points should be incorporated into the plant control system. This will allow for more system automation and protection, allowing the plant control system to provide monitoring, alarms, and associated component equipment control logic. It will also allow control of components from a centralized control room.

3.0 NATURAL GAS FUEL INVESTIGATIONS

3.1 Natural Gas Supply and Demand

Since the early 1980s, Thailand's economy has been developing rapidly and experiencing an equally rapid growth in energy consumption. Petroleum is Thailand's most important primary form of energy but approximately 70 percent of its petroleum demand is imported, mostly from the Persian Gulf. Natural gas found in abundance in the Gulf of Thailand plays a crucial role in Thailand's energy mix.

Total natural gas production in the Gulf was about 1.9 billion cubic feet per day (Bcfd) in 1999 and is estimated to reach 2.4 Bcfd in 2001, exclusive of about 0.5 Bcfd production from the Malaysia-Thailand Joint Development Area (JDA). In addition, the Petroleum Authority of Thailand (PTT) signed a contract with the developers of Yadana and Yetagun gas fields in the Andaman Sea, off shore Myanmar, to receive 0.325 Bcfd in 1999 and 0.55 Bcfd in subsequent years. Yetagun field reserves estimates were recently revised upwards from 1,100 Bcf to 2,920 Bcf.

Thailand's indigenous gas resources are part of the future Trans-ASEAN gas network. Southeast Asia is gas-rich. Current gas reserves in ASEAN countries, including Malaysia, Indonesia, Cambodia, Vietnam and Myanmar, are estimated at 84 Bcm, with more deposit rich areas still being explored.

Thailand saw healthy annual growth in its primary energy demand in the early to mid-90s prior to the Asian economic crisis of 1997. The period 1990 to 1997 saw an 8.9 percent annual increment. The robust growth stopped abruptly in 1997. The hard-earned contracted volume of natural gas to cater for the enormous growth forecast proved to be only partly needed, after all. Contracts have been and are still being renegotiated.

The over-demand to over-supply situation has forced Thailand to delay or farm out some of its natural gas projects. All supply side negotiations, which had not been committed before the crisis, have been indefinitely or substantially delayed. These include the LNG supply agreement with Oman, the natural gas supply agreement from Natuna (Indonesia) and the request to delay the gas purchase from Malaysia-Thailand Joint Development Area (MTJDA).

Year-on-year demand in Thailand for the past few months has been positive. This suggests that demand is gaining momentum. In 1997, demand for gas was 1.57 Bcfd. Demand for gas last year was around 1.88 Bcfd or 19.75 percent growth from the previous year. PTT expects Thailand's natural gas demand to grow five to six percent annually in the next two to three years.

Consumption of natural gas will continue to grow. Thailand's biggest natural gas client is its power generation sector, mainly Electricity Generating Authority of Thailand (EGAT), as well as Independent Power Producers (IPPs). For the next several years, natural gas will continue to account for about half of the energy used in power generation. Natural gas use in power generation is on the increase in Thailand (Table 1). This year, the additional demand for natural gas will come from EGAT, small power producers (SPPs) and from increased industrial use.

Table 1: Fuel Consumption in Power Generation [1]

Year	Fuel Oil (MM Litres)	Diesel Oil (MM Litres)	Natural Gas (MMcfd)	Lignite (Ton)
1994	4,711	495	842	12,288
1995	5,169	671	849	12,791
1996	5,432	1,070	1,004	15,655
1997	4,623	1,009	1,200	19,004
1998	4,477	349	1,281	15,900
1999 Forecast	3,803	188	1,500	11,650

[1] EGAT, EGCO, IPPs and SPPs. Source: EGAT Revised PDP 99-01

PTT, shows that the demand for indigenous natural gas grew by 11.7 percent to reach 241,070 boe/d. Of the total, 178,580 boe/d were used for EGAT power generation, down by 0.2%, while gas demand for private industries increased by 69.5 percent to 62,490 boe/d.

The gross resource potential of gas in Thailand is projected to meet domestic demand for at least 50 to 60 years, as more and more new findings replace the produced volume.

Gas is expected to represent 32 percent of the energy mix in 2001.

Near term, the expected improvement in the economy, however, would not be enough to absorb all the gas supply. And demand for electricity is unlikely to catch up with the natural gas supplies that the country has already contracted to buy during the economic boom, leading to a natural gas glut.

PTT sees the high price of imported oil as an opportunity to replace the level of its oil imports with additional domestic natural gas reserves. PTT is engaged actively in promoting natural gas because it can be found abundantly in Thailand. For example, PTT plans to launch a natural gas vehicle program to spur demand. EGAT and PTT also recognizes that it makes economic sense to convert power plants, presently running on imported fuel oil, to indigenous natural gas.

Electricity demand in Thailand has been on the upswing in recent months. Thai power usage for the first six months of 1999 was down significantly compared to 1998 and 1997. But beginning about mid year, that trend began to reverse itself. Since July 1999, power consumption has been running above 1998 levels on a month-to-month basis. By September, consumption was even surpassing 1997 levels, and the trend is continuing.

The use of natural gas as a fuel in the industrial sector in Thailand can be considered as minimal. Gas usage is limited by the insufficient network of pipelines for gas distribution which is not comprehensive enough to absorb the over supply waiting to be released.

3.2 Pipeline Routing

The Petroleum Authority Act B.E. 2521 vested the responsibility for supply and transportation of natural gas with the Petroleum Authority of Thailand (PTT). PTT, a state enterprise, purchases all natural gas from producers and transmits it through its own pipeline system to its customers. EGAT is by far the largest consumer of natural gas in Thailand. The gas pipeline network built by PTT is largely dedicated to transmitting natural gas from off-shore sources to major power generation stations. Thailand's gas pipeline network is shown in Exhibit 3-1.

PTT's master plan for gas transmission has also fallen victim to the sharp decline in projected demand. Pipeline projects have been down sized, delayed or cancelled. Pipeline projects on PTT's master plan, which are most important to the North Bangkok repowering, are the Ratchaburi to Wang Noi 30 inch on-shore trunk line sized for 650 MM cfd with 1200 psig pressure at Ratchaburi and the Bangkok gas-ring distribution grid project from the Ratchaburi-Wang Noi trunk line to EGAT's South Bangkok Station. (Exhibit 3-2). PTT schedule for Bangkok Ring Gas Pipeline Project is shown on Exhibit 3-3.

The Ratchaburi to Wang Noi 150 km trunk line is under construction and is scheduled for completion in late 2000. The 24 inch, 60 km long gas ring around Bangkok will be sized for 300 MM cfd for the North Bangkok Station and additional 210 MM cfd for industry around Bangkok. The gas ring will accomplish a very important interconnection between the PTT eastern network supplied with gas from the Gulf of Thailand and the western network supplied with the off-shore gas from Myanmar. PTT proposes to build a 24 inch spur line to the North Bangkok Station from the gas-ring pipeline and will install a booster compressor station at the beginning of the gas ring pipeline sized to maintain 500 psig at North Bangkok. Two routes are under consideration for the ring gas pipeline, both originating at the Gas Control Station RA 6 of Ratchaburi to Wang Noi trunk line and then run for 3 km parallel to Sai Noi Ban Kluai Road to the transmission line near Sai Noi power station. The first one along the 230 kV transmission line to Bangkok Noi substation and from there along another 230 kV line to North Bangkok Station, the second along the same 230 kV line toward the Bangkok Noi substation and then following the railroad to the North Bangkok Station (Exhibit 3-4). The length of these lines are 47 and 35 km, respectively. Rights-of-way along the transmission lines must be obtained from individual land owners (EGAT has only air rights), while the right-of-way along the railroad tracks has to be obtained from the State Railroad Company. PTT estimates the 47 km 24 inch pipeline along the 230 kV transmission line may cost 4 billion Baht (US $95 million) or about US $2 million per kilometer. Accordingly, a 35 km pipeline is estimated to cost about US $70 million.

The 24 inch branch line to the North Bangkok Station is not currently in PTT's master plan, but will be added after the optimum routing is selected. PTT expects that additional industrial users of gas and future automobile natural gas stations will also benefit from the spur to North Bangkok.

PTT indicated that another alternative is to supply gas to North Bangkok from the eastern network by extending the existing 10 inch diameter line supplying gas from the Gulf of Thailand sources to Pathum Industries at the Rangsit area. Such an extension, however, would have a limited capacity of 150 MM cfd (equivalent to 750 MW) at maximum pressure of 290 psig. This would not meet EGAT's requirement for North Bangkok of about 300 MM cfd, necessary for two blocks of power, 700 to 750 MW capacity each.

Finally, Unocal Thailand Ltd., a major foreign energy provider in Thailand whose production supports about 30 percent of Thailand's total energy demand, conducted preliminary investigations of pipeline routing to the North Bangkok Station.

Unocal has engaged Team Consulting Engineering to analyze the existing land use along potential pipeline routes, to select the most suitable routing in terms of permitting, acquiring the right-of-way for construction and likely public acceptance, and to conduct a survey along the selected route. Unocal study indicated the shortest of the two routings being considered by PTT (along the 230 kV line from Sai Noi toward Bangkok Noi and along the southern railway line) as the best choice and the survey further identified three areas along that route as being the most difficult, one requiring ROW acquisition of privately owned land and two areas where relocation and compensation of households would be necessary.

The optimum routing to the North Bangkok Station will largely depend on the results of detailed surveys which both PTT and Unocal plan to carry out. Should PTT implement its gas-ring around Bangkok project in time for the North Bangkok repowering, a spur pipeline from the ring would probably provide the most economical routing.

3.3 Gas Composition/Conditions

There are considerable differences in the composition and heating values of natural gas available in Thailand depending on the supply sources.

Gas from the Yadana wells off the coast of Myanmar typically contain 25% nitrogen and 1% carbon dioxide. Its high heating value (HHV) is about 715 Btu/scf.

Gas from the Yetagun wells, also off-shore Myanmar, is high in carbon dioxide (15% max) but low in nitrogen and its high heating value ranges between 950 and 1,050 Btu/scf.

When Yetagun wells start commercial operation in late 2000, the mixture of gas from the two Myanmar fields supplied into the Ratchaburi-Wang Noi trunk line will average about 800 Btu/scf HHV, 5% carbon dioxide, 19% nitrogen and 72% methane. The average composition of Myanmar gas is shown on Exhibit 3-5. Gas from the Ratchaburi-Wang Noi pipeline delivered to the North Bangkok Station via the Bangkok gas ring will be at pressure of about 500 psig.

Gas from the Gulf of Thailand contains nearly 20% carbon dioxide, and less than 2% nitrogen. Its high heating value averages 1000 Btu/scf. Should the Bangkok gas ring extension be implemented, gas from the Gulf of Thailand fields and from the Myanmar fields will be mixed and quality and composition will be dependent on the mixing proportions.

3.4 Fuel Costs

At the present time, PTT is the sole distributor of natural gas in Thailand. EGAT is PTT's largest customer and the largest consumer of natural gas in Thailand. Under the existing gas purchase agreement between EGAT and PTT, the price of delivered, gas is based on the principle of cost pass through plus suppliers cost margin. The cost plus price is established by negotiations between EGAT and PTT with active participation by NEPO (National Energy Policy Office) and the Ministry of Industry and consists of two main components:

- Well head cost – which is the weighted average gas cost from various gas fields based on PTT's gas supply agreements with the producers of natural gas.
- Gas transportation tariff – which reflects PTT cost of building, operating and maintaining a network of pipelines from the producers delivery points to the users. The gas transportation cost is fixed and applies equally to all EGAT's facilities wherever the off take point from PTT system is.

Well head (gas pool) costs are generally subject to currency exchange fluctuations and escalation which is tied to the price of 2% sulfur oil and Thailand's wholesale price indices. In addition, PTT adds a margin of 1.75% to this cost component. EGAT's projection of gas price escalation is less than 2 percent per year.

As of March 2000, EGAT has two tariffs for natural gas:

For natural gas from the Gulf of Thailand fields which includes Unocal 1, 2 and 3, Pailin, Bongkot, Tantawan and JDA (future):

Well head cost	82 Baht/million Btu
Transportation tariff	19 Baht/million Btu
Total	101 Baht/million Btu
	(about 2.6 US$/million Btu)

For natural gas from Yadana and Yetagun fields off Myanmar shore:

Well head cost	119 Baht/million Btu
Transportation tariff	17 Baht/million Btu
Total	136 Baht/million Btu
	(about 3.5 US$/million Btu)

According to government present policy, when western and eastern pipeline networks are interconnected, the tariffs will be revised and EGAT will pay a single weighted average price, regardless of the source of gas.

EXHIBITS

SECTION 3

Exhibit No.	Subject
3-1	PTT Gas Pipeline Master Plan
3-2	Bangkok Ring Gas Project
3-3	Schedule of Bangkok Ring Project
3-4	Pipeline Routing Options

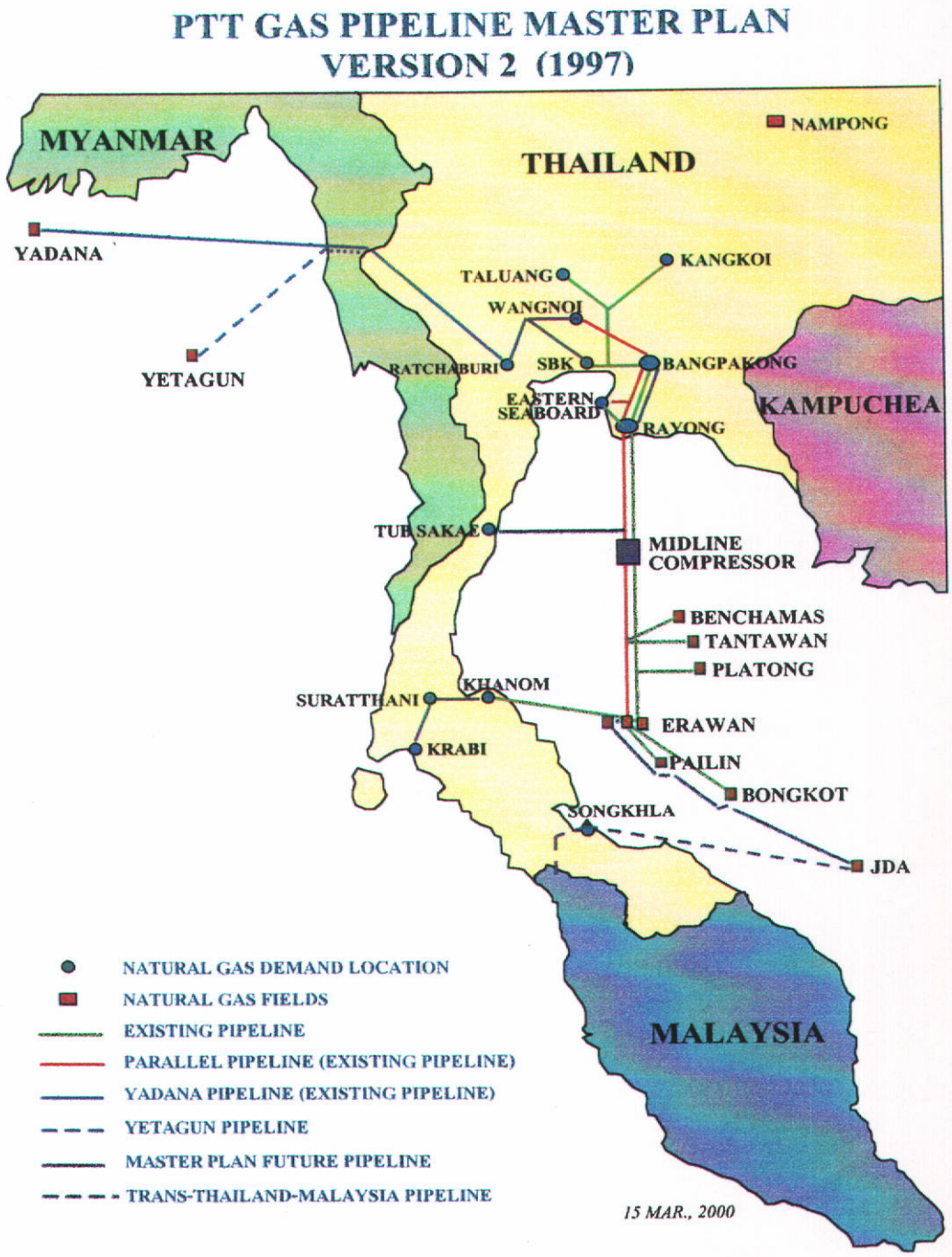
PTT GAS PIPELINE MASTER PLAN
VERSION 2 (1997)
MYANMAR
THAILAND
NAMPONG
YADANA
YETAGUN
KANGKOI
TALUANG
WANGNOI
RATCHABURI
SBK
BANGPAKONG
EASTERN SEABOARD
RAYONG
KAMPUCHEA
TUB SAKAE
MIDLINE COMPRESSOR
BENCHAMAS
TANTAWAN
PLATONG
SURATTHANI
KHANOM
ERAWAN
KRABI
PAILIN
BONGKOT
SONGKHLA
JDA
MALAYSIA
NATURAL GAS DEMAND LOCATION
NATURAL GAS FIELDS
EXISTING PIPELINE
PARALLEL PIPELINE (EXISTING PIPELINE)
YADANA PIPELINE (EXISTING PIPELINE)
YETAGUN PIPELINE
MASTER PLAN FUTURE PIPELINE
TRANS-THAILAND-MALAYSIA PIPELINE
15 MAR., 2000

Exhibit 3-1

Bangkok Gas Ring Project

Gas Pipeline and Station Locations

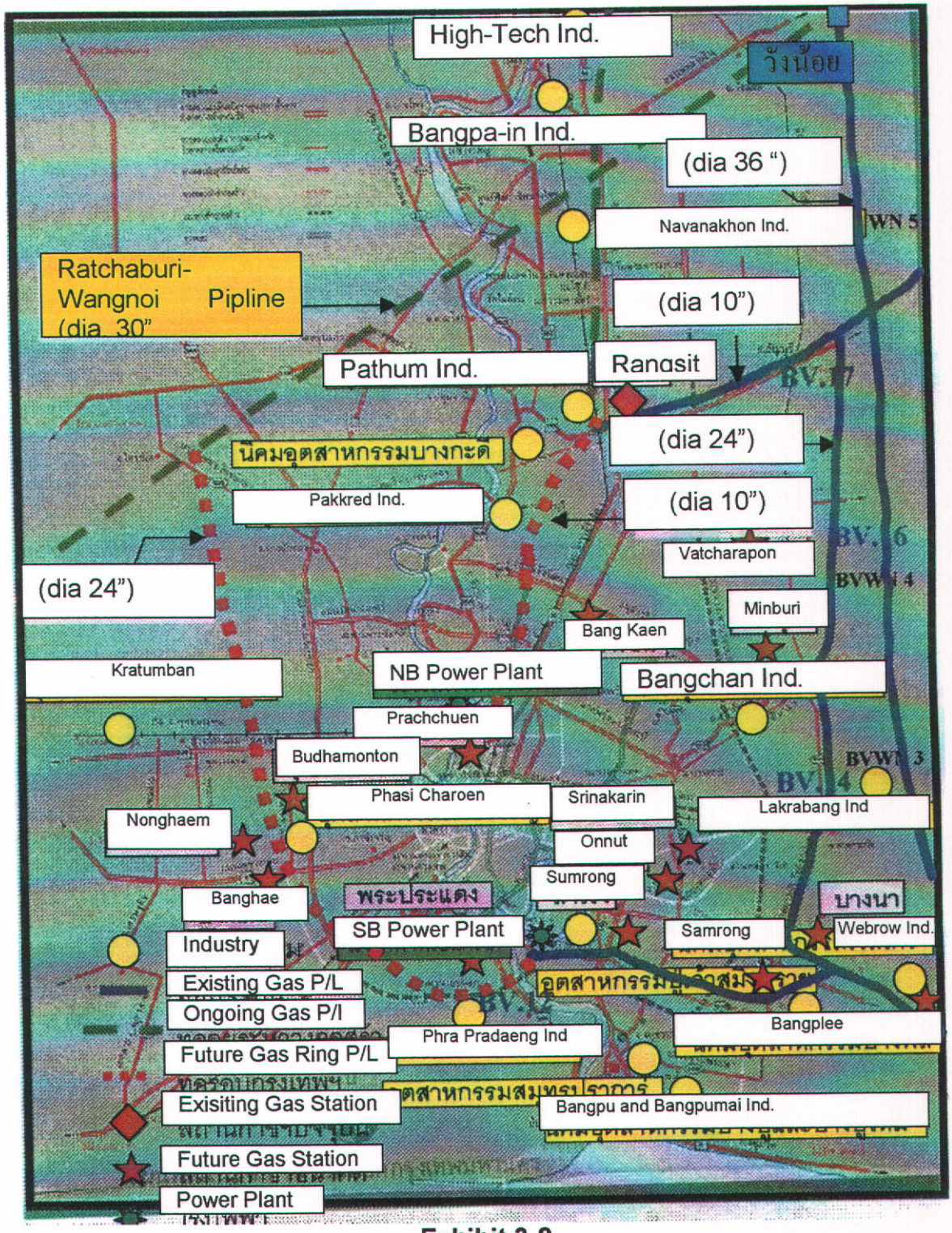

Exhibit 3-2

Schedule for Bangkok Ring Gas Pipeline Project

ID	Description	Period	Months
1	PTT Board Approval	Dec. 99	-
2	Basic Design/IEE/Feasibility Study	Jan.-Jun. 00	6.0
3	EIA Study	Apr.-Dec. 00	9.0
4	Public Relations/Public Participation	Apr. 00-Dec. 01-Dec. 02	21-33
5	Detailed Design/Bidder	Jul. 00-Jun. 01	12.0
6	Cabinet/ONESDB Approval	Oct. 00-Jun. 01	9.0
7	EIA Approval	Jan.-Jun. 01	6.0
8	Land & Land Right	Jul. 00-Jun. 01	12.0
9	Procurement/Construction/Commissioning	Jul. 01-Dec. 02	18.0

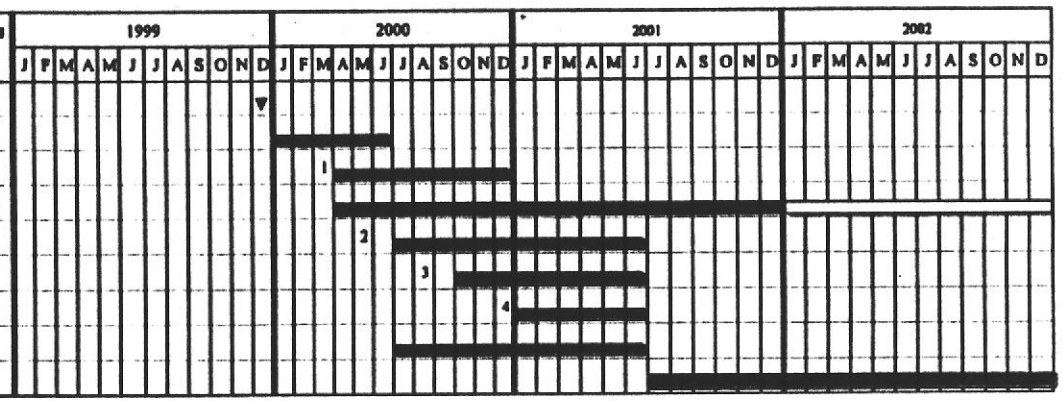

Urgent Activity

1. EIA Study , Since Apr. 2000
2. Detailed Design and Bidder , Since Jun. 2000
3. Project Approved by ONESDB/EIA Approved by OEPP
4. EIA Approved by OEPP within 6 months

Remarks :

ONESDB : Office of the National Economic and Social Development Board

OEPP : Office of the Environmental Policy and Planning

PTT : Petroleum Authority of Thailand

FIGURE 3-3

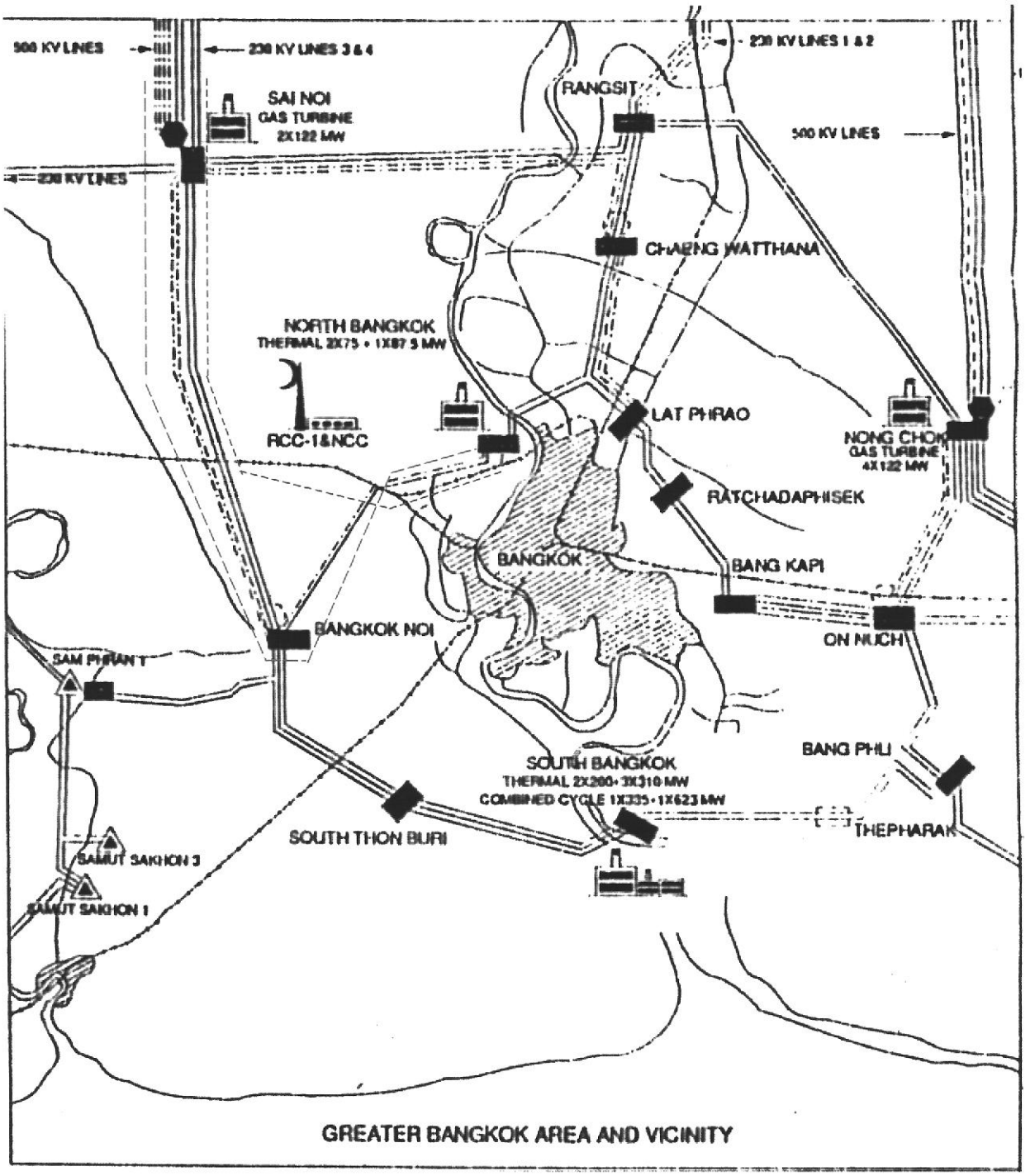

Option 1

Option 2

Exhibit 3-4

PIPELINE ROUTING OPTIONS

4.0 ASSESSMENT OF REPOWERING OPTIONS

4.1 Methodology and Approach

The objective of the assessment process is to select the most practical and economical repowering configuration. This involves selecting the gas turbine-generators models (GTG) and compatible heat recovery steam generators (HRSGs) that best match the existing steam turbine-generators to create an economical, operable and reliable combined cycle plant.

The assessment process was carried out in several steps. First, a set of evaluation criteria was developed, then a listing of all commercially available gas turbine-generators was prepared and the turbines that did not fit the application, either by size (too small or too large) and those that had too low turbine exit gas temperature were deleted from the list. The gas turbines that remained on the list after this first screening as shown on Exhibit 4-1 were considered to develop practical combinations of gas turbines, HRSGs and existing steam turbines. These combinations were narrowed down to three arrangements:

A. Two gas turbine-generators, each with its HRSG feeding the three existing steam turbine-generators. Arrangement A, see Exhibit 4-2, Sheet 1.

B. Three gas turbine-generators, each with its HRSG. Each GTG/HRSG feeding an existing steam turbine. Arrangement B, see Exhibit 4-2, Sheet 2.

C. Six medium sized GTG/HRSG sets arranged in pairs with each pair feeding one of the existing steam turbines. Arrangement C, see Exhibit 4-2, Sheet 3.

Heat and mass balances were performed and optimized for each of these configurations using representative gas turbines. The resultant options were evaluated with respect to available space, operability and economics. From evaluation of these options, the best configuration of gas turbine-generators, HRSGs and steam turbine-generators was selected and recommended for the conceptual design and implementation.

At EGAT's request, the possible use of EGAT's owned Mitsubishi MW701D gas turbines installed at the Nong Chok site was added to this study. Based on the data provided by EGAT for these turbine-generators, heat balances were developed, costs were estimated, generation costs were calculated and the results were included in the evaluation.

4.2 Description of Options

Previous life extension studies of the North Bangkok units conducted by EGAT examined several alternatives involving the use of existing equipment at the site. The majority of the alternatives studied included utilizing the existing boilers and feedwater systems in one way or another with the existing steam turbines. A review of the results of these studies indicated that these alternatives would not be competitive with repowering using modern gas turbines linked with heat recovery steam generators (HRSGs) and the existing steam turbines.

Therefore, the options studied in detail at this time were all variations of the common approach of using gas turbines exhausting gases to HRSGs to produce steam to be used in the existing steam turbines. Even with this basic configuration there are many alternative arrangements and gas turbine models to be considered. However, gaining maximum utility from the existing turbines at minimum cost dictated a close match between HRSG output and existing steam turbine capacity at design steam conditions. This consideration reduced the number of viable options.

The existing steam turbines are reheat types designed for 1000° F, 1450 psig main steam, and 1000°F, 400 psig reheat steam conditions. To approach or achieve these conditions with unfired HRSGs requires combustion turbine exhaust gas temperatures approaching, or in excess of, 1100° F.

The smaller Unit 1 and 2 steam turbines each require on the order of 500,000 lb/hr of main steam. To produce this steam flow will require a gas turbine exhaust flow of approximately 3,000,000 lb/hr for each of these two smaller steam turbines. The larger Unit 3 steam turbine will require a gas turbine exhaust flow of approximately 3,500,000 lb/hr to supply the approximately 575,000 lb/hr of steam it is capable of accommodating.

Among the current manufacturers' offerings, the turbines which offered suitable matches of exhaust gas flow and temperature for each of the above configurations are listed on Exhibit 4-1. The units listed are standard offerings from principal manufacturers. The gas turbines selected for further investigation are representative samples of the best matches to the steam turbine requirements. All these turbines have established commercial experience records sufficient to demonstrate general reliability and allow reasonable predictions of performance. In addition, they should have reached enough time in service prior to any purchase for North Bangkok for any major long term ills to be identified.

To make maximum use of the existing turbines and auxiliary systems without major capacity reduction was considered an important criterion. One result of this, is that combustion turbines with higher exhaust temperatures were favored

because exhaust temperatures approaching 1100°F are needed to provide 1000°F main and reheat steam temperatures.

Practical considerations dictate that each gas turbine be coupled with its own HRSG. Three basic configurations can yield the requisite steam flows:

A) Two very large gas turbine/HRSGs can feed manifolds providing main, reheat, and low pressure steam to all three turbines.
B) Three large gas turbine/HRSGs can be used each feeding one of the steam turbines.
C) Six medium sized gas turbine/HRSGs can be arranged in pairs with each pair feeding one steam turbine.

The three typical arrangements evaluated are schematically illustrated on Exhibit 4-2, Sheets 1, 2 and 3 and diagrammatically shown on Exhibit 4-3, Sheet 1, 2 and 3. The performance summary for the specific cases investigated in detail is presented on Exhibit 4-5.

Arrangement A (Exhibit 4-2, Sheet 1) consists of two large gas turbines each discharging flue gases into a HRSG. Steam is produced at three pressure levels in addition to reheat steam. Steam, condensate and feedwater systems are manifolded and distributed from headers to the three machines. Under this arrangement, two alternative gas turbine models were evaluated and heat balances optimized. The first uses two GE gas turbines, Model PG9351FA which under design conditions of 90°F, 70% relative humidity produce 229,956 kW each. The steam turbines of Units 1 and 2 produce 75,469 kW each and Unit 3 produces 90,692 kW. In combined cycle this option produces a net output of 680,496 kW at a net plant heat rate of 6,517 Btu/kWh (LHV). Exhibit 4-3, Sheet 1 presents a diagrammatic arrangement of major components and shows the existing equipment which will be used in the repowering, while Exhibit 4-7 shows the results of the heat balance data for this option. In this option, nearly full steam output is achieved without duct firing.

As an alternative for Arrangement A, two Siemens V94.3A gas turbines each with its HRSG were analyzed. The net repowered plant output is 606,995 kW without supplementary firing in the HRSGs and 634,590 kW with supplementary firing. The net plant heat rates are 6,573 Btu/kWh and 6,714 Btu/kWh (LHV), respectively. Exhibit 4-8 shows the result of the heat balance data for this option without and Exhibit 4-9 with supplementary firing. Duct firing is provided in this option to increase output of steam turbines.

For Arrangement B, two Siemens gas turbines V94.2 were chosen each with its HRSG to feed the Unit 1 and Unit 2 steam turbines. For the larger Unit 3 steam turbine, the V94.2A gas turbine with its HRSG was used. In this arrangement, each unit is separately operated, there is no manifolding of steam, condensate and boiler feed lines. The resulting net plant output is 668,039 kW and the net

plant heat rate is 6,864 Btu/kWh (LHV). Exhibit 4-3, Sheet 2 shows the diagrammatic arrangement of major components and Exhibits 4-10 and 4-11 present the results of heat balance data for this option.

Using the existing Mitsubishi MW701D gas turbines from Nong Chok in Arrangement B produces a net plant output of 569,687 kW without and 607,390 kW with supplementary firing. The net plant heat rate is 7,347 and 7,413 Btu/kWh, respectively. Exhibits 4-12, 4-13, 4-14 and 4-15 show the results of the heat balances for this case.

Arrangement C uses a total of six GE Model PG6101FA gas turbines each with its HRSG and grouped in pairs. Each pair serves one of the existing steam turbines. The resultant net plant output is 573,571 kW without and 591,780 kW with supplementary firing. The net plant heat rates are 6,841 and 6,909 Btu/kWh, respectively. Exhibit 4-3, Sheet 3 shows the diagrammatic arrangement, while Exhibits 4-16 through 4-19 present the results of heat balance calculations.

In all cases in order to fully utilize waste heat from gas turbine exhaust gases, the HRSGs are provided with three steam pressure levels, a reheat and a condensate heating section. Evaporative cooling of the inlet air to the GTGs was assumed in all cases. The high pressure steam delivers main steam at 1,450 psig and at or close to 1,000°F to the steam turbine inlet, the middle pressure supplies steam to the IP turbine at the reheat intercept valves at or close to 1,000°F, and low pressure steam is injected into the steam turbine at the LP crossover point to the LP turbine.

Where full output of the steam turbines could not be achieved with available waste heat, supplementary firing was introduced. Although such additional capacity is attained at the expense of higher heat rate, it is economically justified. Whenever the extra capacity is not needed, the plant would be operated without the supplementary firing in order to achieve better fuel economy. For the purpose of economic analyses, in all duct firing study cases, it was assumed that only 20 percent of time the units are operated with duct firing. Heat balances were developed for both unfired and duct fired cases.

Performance analyses conducted to optimize the plant repowering configuration are based on published or predicted performance data provided by gas turbine suppliers. The results are not intended for the selection of turbine makes or models which must be based on guaranteed performance and quoted prices to be obtained through a formal procurement process.

4.3 Evaluation Criteria

A set of criteria was established to assess the repowering options. The criteria addressed economic, space allocation, operability, optimum use of existing equipment and reliability considerations.

4.3.1 Heat Rate

The economic benefits from the repowered plant are, of course, a major consideration. The repowered plant will have to compete with existing and new power plants and therefore, will have to have a low net plant heat rate. Modern natural gas fired combined cycle plants have net plant heat rates in the range of 6000 to 7000 Btu/kWhr. The net plant heat rate of the repowered plant should not be significantly higher.

4.3.2 Layout

The North Bangkok Station is an established site in the proximity of major load centers, which makes it an extremely valuable property. Most efficient use of the property is desirable. More specifically, options that will allow for placement of an additional 600 to 700 MW combined cycle capacity at the site were considered most favorably.

Two alternative layout options were developed. In the first, the available space for the gas turbines, HRSG and additional equipment was identified south of the existing steam generators, where the oil storage tanks are currently located. This arrangement would minimize demolition requirements but would require longer steam lines between the new HRSGs and the existing steam turbines. Alternatively, the existing steam generators would be demolished in addition to oil tanks in order to make room for the gas turbines and associated HRSGs. This arrangement is preferred by EGAT and is the basis of the cost estimates which include demolition costs.

Exhibit 4-20 and 4-21 show preliminary layouts in the oil storage tank area for Arrangement A and B. Exhibits 4-22 and 4-23 for Arrangement A and B, respectively, show alternative layouts with HRSGs located close to the existing steam turbines where the existing steam generators are sited. Arrangement C requires considerably more space and would require demolition of maintenance buildings and other facilities.

4.3.3 Operability

The ability to startup, shutdown, change load without great difficulties is another important criteria. Because the steam turbines are designed for reheat cycle, operation of units from steam supplied by headers presents difficulties in steam distribution and pressure equalization, unless adequate turbine bypass system

and a complex valving system are provided to allow for startup and load changes. Steam header systems are required in the configuration A where two (2) gas turbines with HRSGs feed three (3) steam turbines. Although the Arrangement A shows the best fuel economy, it is not be the best system because of operating complexities.

4.3.4 Maximum Steam Turbine Exhaust Flow

To fully take advantage of the heat contained in the flue gases, feedwater heating will be performed in the HRSGs and the existing LP and HP feedwater heaters will be taken out of service. This increases the steam flow to the low pressure cylinder of the steam turbine. There is a limitation of the amount of steam that can be discharged through the last stage of the LP rotor because of the stresses induced in the rotating blades. All three steam turbines are double flow with 20" last stage blades. The flow area of the last stage blading is 26.34 sq. ft. According to information provided by the original steam turbine manufacturer (Westinghouse), US steam turbines built in the 1950s and 1960s allow an exhaust flow of 12,000 lbs/ft^2 hr of flow area. Therefore, the maximum exhaust steam flow should not exceed 2 x 26.34 sq. ft x 12,000 lbs/ft^2 hr = 632,000 lbs/hr. All study alternatives considered remain below this design limit.

4.3.5 Maximum Generator Ratings

Generators for Units 1 and 2 are rated at 96,000 KVA and 80% power factor, while Unit 3 generator is rated at 105,000 KVA at 85% power factor. All study cases were maintained below KVA ratings and close to design power factors.

4.3.6 Use of Existing Equipment

To minimize investment, it is desirable to use, to the maximum extent practical existing equipment. Major equipment such as surface condensers, circulating water intake and pumps, condensate and feedwater pumps, deaerator and storage tank, main and auxiliary electrical transformers, etc. were investigated for compatibility with the repowering options and remaining useful life.

The initial examination of the existing plant made as part of this study indicate that the steam turbines and much of the related steam cycle and heat rejection equipment could provide many years of useful service with reasonable amounts of reconditioning and upgrading. In addition, much of the plant infrastructure was judged to be useable.

It was judged important that the repowered plant be able to achieve the levels of reliability expected of modern equipment. To achieve satisfactory reliability and an additional operating life of 20 years, reconditioning and upgrading of existing North Bangkok plant equipment was included in the construction cost estimates at the total amount of 10 million US dollars.

4.4 Environmental Requirements

The proposed repowering options will be designed to meet environmental regulations and limitations in effect in Thailand and to meet the standards of the World Bank as well. The relevant environmental requirements address airborne emissions, thermal and pollutant discharges to the waters, and noise. The regulations for each of these of these areas and the effects on the repowering are addressed below.

4.4.1 Airborne Emissions

Air borne emissions of concern from power plants include particulates, sulfur dioxide, and nitrogen oxides (NOx). Thailand's environmental requirements concerning these pollutants include limits on emission concentrations and ambient air concentrations. The World Bank has issued limits on airborne emissions for new thermal power plants as part of their Pollution Prevention and Abatement Handbook. The Thermal Power – Guidelines for New Plants contained in the Handbook address airborne emissions with a threefold approach. The guidelines contain limits on emission quantities, concentrations, restrictions on ambient levels, and a requirement for offsets for many circumstances. The limits are described below.

Emission Standards

The Ministry of Science Technology and Environment and Ministry of Industry emission standards for new power plants designed to begin operation after January 31, 1996, were provided by EGAT. Emission concentration standards for gas and oil fired units are summarized in the following table.

Emission Standards for New Power Plants (Thailand)

Pollutant	Type of Fuel	
	Oil	Gas
Sulfur Dioxide (SO_2), ppmV (>500 MW)	320	20
Oxides of Nitrogen (as NO_2), ppmV	180	120
Particulates, mg/Nm^3	120	60

All Emissions Limits are calculated at 1 atmosphere (760 mm Hg), 25 °C, on a dry basis with excess O_2 at 7%.

World Bank guidelines also include limits on power plant pollutant exhaust concentrations and quantities for sulfur dioxide, NOx, and particulates. In addition to these limits, further restrictions are placed on emissions in areas where the air quality is moderate or poor. These additional restrictions will be covered in the discussions of ambient air standards.

Sulfur dioxide emissions from fossil fired power plants are limited to 0.20 metric tonnes per day (tpd) per MWe of capacity for the first 500 MWe plus 0.1 tpd for each additional MWe over 500 MW. For a typical 600 MWe combined cycle plant, SO_2 emissions would be limited to 110 tpd (0.183 tpd/MWe).

This emission limit may be compared with Thai standards by converting it to the same units. The sulfur dioxide emission limit of 0.183 tpd/MWe (16.8 lb/MWh) would equate to 2.40 lb/mmBTU for a combined cycle plant with a heat rate of 7,000 BTU/kWh. This would result in a concentration of about 850 ppmV (dry) SO_2 at 7% excess oxygen, significantly greater than the level permitted by regulations in Thailand.

The World Bank emission limits for NOx generated by firing oil and gas in combustion turbines are summarized in the table below.

World Bank Emission Concentration Limits for Nitrogen Oxides from Combustion Turbines

Type of Fuel	NOx Emissions, mg/Nm^3 (dry) **(1)**	NOx Emissions, ppmV (dry) **(2)**
Natural Gas	125	144
Diesel Fuel	165	188

(1) Emissions Limits (mg/Nm^3) are calculated at 1 atmosphere (760 mm Hg), 25 °C, on a dry basis with excess O_2 at 15%.

(2) Equivalent emissions limits (ppm) adjusted to 1 atmosphere (760 mm Hg), 25 °C, on a dry basis with excess O_2 at 7%.

As in the case of sulfur dioxide, Thai emission limits are more stringent than the World Bank limits.

The World Bank limits particulate emissions to 50 mg/Nm^3 (dry basis). Although this is more stringent than Thailand emission limits, combustion turbine emissions should easily meet this limit.

Ambient Air Quality Standards

Current Thai ambient air quality standards, approved by the National Environmental Board (NEB) in 1995, provide concentration limits for sulfur dioxide, nitrogen oxide, particulate matter and carbon monoxide in the environment. The approved standards are summarized in the table below.

Ambient Air Quality Standards of Thailand

Pollutant	Concentration Limit, mg/m^3			
	1- hour	8-hour	24-hour	1-year
Sulfur Dioxide	0.780	-	0.300	0.100
Nitrogen Dioxide	0.320	-	-	-
Total Suspended Particulates (TSP)	-	-	0.330	0.100
Particulate Matter (PM10)	-	-	0.120	0.050
Carbon Monoxide	34.2	10.26	-	-

Compliance with ambient air quality is achieved by limiting emissions from the combustion source and by providing a discharge stack of sufficient height to achieve the necessary dispersion of flue gas. The stack height allowed for dispersion is limited to good engineering practice (GEP) recommended values, usually equal to the height of the tallest nearby structure plus 1.5 times the lesser of the projected length or height of the nearby structures. The impact of the combustion source on ambient air quality is estimated during the environmental assessment by the use of appropriate atmospheric dispersion models to predict the ambient concentration of these pollutants.

The World Bank/IFC has developed guidelines for ambient air quality based on World Health Organization guidelines. These are summarized below.

World Bank/IFC Ambient Air Quality Guidelines

Pollutant	Concentration Limit, mg/m^3	
	24-hour	1-year
Sulfur Dioxide	0.150	0.080
Nitrogen Dioxide	0.150	0.100
Total Suspended Particulates (TSP)	0.230	0.080
Particulate Matter (PM10)	0.150	0.050

These World Bank Guidelines are more stringent than the comparable Thai limits.

In addition to these limits, the World Bank requires that in airsheds of poor air quality any new emissions must be offset by reductions in current emissions. This is also true for plants larger than 500 MWe. in areas of moderate air quality.

An airshed is classified as having moderate quality air if the annual mean value for any of the pollutants exceeds the one year value listed above or if the 98th percentile of 24 hour mean values of concentration for any of the pollutants exceeds the 24 limits listed above. An airshed is classified as having poor quality air if the annual mean value for any of the pollutants exceeds twice the one year

value listed above or if the 95th percentile of 24 hour mean values of concentration for any of the pollutants exceeds the 24 limits listed above.

Because of their normally low emission rates of particulates and sulfur dioxide, gas fired plants are exempt from the offset requirements provided that the backup fuel contains less than 1% sulfur.

Control of Plant Emissions

The repowering project will be designed to comply with all Thai emission standards and with World Bank/IFC emission guidelines. Emissions control systems and the emission levels that will be met are described below.

Sulfur Dioxide

Sulfur dioxide emissions will be controlled by limiting the sulfur content of the combustion turbine fuel. When firing natural gas, achieving the 20 ppm emission standard would limit the sulfur content of the fuel to 0.05 wt. %. Natural gas quality specifications provided by EGAT limit sulfur in the gas to 100 ppm by weight and hydrogen sulfide in the gas to 85 ppm by weight. If both components were at their limit, total sulfur would be 180 ppm (w) or 0.018 wt. %, which is significantly less than the 0.05 wt. % limit.

When firing oil, the emission standard is significantly greater. Limiting sulfur dioxide emissions to 320 ppm would limit the sulfur content of the distillate fuel to 0.7 wt. %. This is significantly greater than the anticipated fuel sulfur content of 0.05 wt. %.

Based on this analysis, sulfur dioxide emissions from the repowered facility should be significantly less than the Thai emission standards for new power plants.

Nitrogen Oxides

Modern combustion turbines utilize dry low NOx combustion (DLN) techniques to reduce nitrogen oxide emissions. NOx emissions may be limited to between 9 and 25 ppm (dry basis @ 15 % O_2), depending on the equipment supplier. The 25 ppm concentration (59 ppm @ 7 % O_2) is significantly less than the 120 ppm Thai emission standard for NOx.

Nitrogen oxide emissions are significantly greater when firing distillate fuel in the same combustion turbine. Turbine suppliers require the injection of water into the turbine to control NOx emissions when firing oil and, even then, NOx emissions are usually predicted to be 42 ppm @ 15 % O_2 (99 ppm @ 7 % O_2). Since the Thai NOx emission standard is 180 ppm when firing oil, operation with water injection will successfully meet the limit. Based on this analysis, Arrangement A, utilizing either GE or Siemens turbines, and Arrangement B

utilizing the Siemens design, will meet the Thai emission standards for nitrogen oxides.

An alternate to Arrangement B is the use of the existing MW701D gas turbines from Nong Chok instead of the proposed Siemens turbines. These are older units; not equipped with DLN combustors and NOx emissions from these units are considerably higher. NOx emissions may be reduced, however, by injection of water into the combustion turbine. Thai-MC Company Ltd. has provided the following NOx emission data:

MW701D Gas Turbine NOx Emissions

Fuel	Water/Fuel Ratio	NOx Emission (15 % O_2)	NOx Emission (7 % O_2)
Natural Gas	0	200 ppm	472
Natural Gas	1	44 ppm	108
Distillate	0	280 ppm	660
Distillate	0.8	70 ppm	162

The data indicate that the required emission limits of 120 ppm when firing natural gas and 180 ppm when firing distillate fuel can be achieved by applying water injection technology.

As discussed above, water injection into the combustion turbine is required to limit NOx emissions when firing distillate regardless of the repowering option selected. The larger capacity turbines, the GE PG9351FA and the Siemens V94.3A require some 50 – 55 m^3/hr of demineralized water for NOx control. Since Arrangement A consists of two (2) combustion turbines, demineralization capacity of 100+ m^3/hr must be provided if the turbines are to be operated at full load firing distillate fuel. Demineralization capacity would be expected to be similar for Arrangement B.

If the Mitsubishi MW701D turbine are selected, water injection is required to control NOx emissions when firing either natural gas or distillate. Estimated demineralized water requirement is about 36 m^3/hr for each of the three turbines required. As a result, whichever options is selected, installed demineralization capacity of 100+ m^3/hr will be required.

It should also be noted that the MW701D option requires some supplementary firing in the duct. Modern duct burner design would limit NOx emissions to 0.08 lb/mmBTU heat input (HHV) which is about half the emission rate per unit of heat input anticipated from the combustion turbine. Since the duct burners would only consume approximately 5% as much fuel as the combustion turbines the additional NOx generated would not significantly affect the quantity or concentration of NOx emitted.

Particulates

Particulate emissions from combustion turbines firing natural gas or distillate fuel are typically low. Emissions from the gas turbine are estimated at less than 10 mg/Nm^3 when firing natural gas and less than 15 mg/Nm^3 when firing distillate fuel. Both values are well below even the World Bank Guidelines for particulate emissions.

Ambient Air Quality

Compliance with ambient air quality standards is assessed through the use of air simulation modeling. Simulation models predict the concentration of pollutants at a variety of identified receptors, both at ground level and at elevated terrain. Model inputs include pollutant emission rates, stack height, meteorological conditions and topographical features. It is anticipated that the modeling will be included as part of the project Environmental Impact Assessment. It is expected that if the plant complies with the limits on stack emissions, its impact on ambient air levels will not be significant.

4.4.2 Noise

The allowable noise generated by operating equipment is limited to the following by American Standard Institute B133.8 – 1977.

Distance From Source, meters	Maximum Noise Level (dBA)
1	85
122	54

In addition, Thai standards limit exposure to noise in the workplace requiring ear protection where exposure limits are to be exceeded. Thai noise standards also provide that noise from the facility will not exceed a Leq 24-hour average level of 70 dBA at the project boundary.

The World Bank also limits allowable noise generated by the project. Noise levels measured at receptors located outside the project boundary should be limited to the following.

Maximum Allowable Ambient Noise (World Bank)

Receptor	Daytime	Nighttime
Residential; Institutional; Educational	55 dBA	45 dBA
Industrial; Commercial	70 dBA	70 dBA

These noise limits can be met by well-designed systems, which may include inlet air and stack silencers and equipment enclosures.

4.4.3 Thermal Discharges

Discharges of cooling water from the North Bangkok Plant to the Chao Phraya River are required to be at less than 40°C. In order to meet this limit on cooling water discharge temperature, the existing plant has had to reduce its load during times of high river water temperature.

The World Bank Pollution Prevention and Abatement Handbook calls for a temperature rise of no more than 3°C at the edge of the zone where initial mixing and dilution take place. If this point is not defined, 100 meters from the point of discharge should be used when there are no sensitive ecosystems within this distance. Thai regulations, which allow 3°C temperature rise at 500 meters from the discharge point or in the middle of a river would not affect the design of the cooling system at the North Bangkok Station

The repowered plant will reject somewhat higher heat loads than the existing facility to the steam condensers. An assist cooling tower will be added to the once through cooling system, to allow the repowered plant to operate within the limit on cooling water discharge temperature. Water from the outlet of the condensers will be directed through this new tower prior to discharge to the river when needed to remain with the 40°C limit.

4.4.4 Industrial Effluents

The primary sources of liquid wastes to be discharged from the plant will be regeneration solutions from the demineralizers in water treatment plant and the boiler washdown fluids from cleaning of the HRSGs every few years. The repowered plant will be equipped with a collection and neutralization system to capture these and other wastes and to allow for their sampling, neutralization, and other treatment as required prior to discharge. A holding pond will be sized for 24 hour storage.

The World Bank Pollution Prevention and Abatement Handbook calls for the following limits on plant discharges to be met on a daily basis with no dilution. The plant discharges would include the once through cooling water and it is expected that these standards will be met without difficulty.

World Bank Standards on Thermal Power Plant Effluents:

Parameter	Limiting Value
pH	6-9
Total Suspended Solids	50 mg/l
Oil and Grease	10 mg/l
Total Residual Chlorine	0.2 mg/l
Chromium (total)	0.5 mg/l
Cooper	0.5 mg/l
Iron	1.0 mg/l
Zinc	1.0 mg/l

Thai Industrial Effluent Standards (PCD/MOSTE):

Items	Unit	Standard Values
1. pH	-	5.5 – 9.0
2. Total Dissolved Solids (TDS)	mg/l	not more than 3,000 mg/l depending on receiving water or type of industry under consideration of PCC but not exceed 5,000 mg/l not more than 5,000 mg/l exceed TDS of receiving water having salinity of more than 2,000 mg/l or TDS of sea if discharge to sea.
3. Suspended Solids (SS)	mg/l	not more than 50 mg/l depending on receiving water or type of industry or type of wastewater treatment system under consideration of PCC but not exceed 150 mg/l
4. Temperature	°C	not more than 40
5. Color and Odor	-	not objectionable
6. Sulfide (as H_2S)	mg/l	not more than 1.0
7. Cyanide (as HCN)		not more than 0.2

8. Heavy Metals		
- Zinc	mg/l	not more than 5.0
- Chromium (Hexavalent)	mg/l	not more than 0.25
- Chromium (Trivalent)	mg/l	not more than 0.75
- Arsenic	mg/l	not more than 0.25
- Copper	mg/l	not more than 2.0
- Mercury	mg/l	not more than 0.005
- Cadmium	mg/l	not more than 0.03
- Barium	mg/l	not more than 1.0
- Selenium	mg/l	not more than 0.02
- Lead	mg/l	not more than 0.2
- Nickel	mg/l	not more than 1.0
- Manganese	mg/l	not more than 5.0
9. Fats Oil and Grease (FOG)	mg/l	not more than 5 mg/l depending on receiving water or type of industry under consideration of PCC but not exceed 15 mg/l
10. Formaldehyde	mg/l	not more than 1.0
11. Phenols	mg/l	not more than 1.0
12. Free Chlorine	mg/l	not more than 1.0
13. Pesticides	mg/l	not detectable
14. Biochemical Oxygen Demand (BOD)	mg/l	not more than 20 mg/l depending on receiving water or type of industry under consideration of PCC but not exceed 60 mg/l
15. Total Kjeldahl Nitrogen (TKN)	mg/l	not more than 100 m/l depending on receiving water or type of industry under consideration of PCC but not exceed 200 mg/l
16. Chemical Oxygen Demand (COD)	mg/l	not more than 120 mg/l depending on receiving water or type of industry under consideration of PCC but not exceed 400 mg/l

4.5 Economic Evaluation

To assess the trade-offs between the economic impact of net plant output, heat rate, operating and maintenance costs and capital charges, the unit generation costs were calculated and compared between the options under consideration. Capital costs were developed for each of the cases studied and are summarized on Exhibit 4-6. Capital costs were estimated on the basis of equipment, materials, construction and services required for each option. Quotations from manufacturers were obtained for some of the major equipment such as HRSGs, cooling towers, etc. Labor costs were adjusted to reflect local labor rates, productivity, degree of mechanization, and complexity of the work in an existent congested site. All prices are presented as of July 1, 2000.

The prices for gas turbine-generators were based on published data and from similar previous projects. The cost of overhauling and relocating the Nong Chok MW701D gas turbine generators and auxiliaries was based on an estimate provided by EGAT. The costs of other major equipment were obtained from Burns and Roe / Power Tech data base and from similar projects adjusted for size using scaling factors and escalation. In each case, the scope of supply of systems and equipment takes into consideration selective reuse of the existing equipment. Cost for refurbishing of reused North Bangkok equipment included in the construction cost estimates totals 10 million US dollars.

The economic evaluations were made on the basis of the following assumptions:

Capital Cost Base Year	7/1/00
Commercial Operation	1/1/05
Annual Capacity Factor	80.00%
Long Term Interest Rate	10.00%
Debt	75.00%
Debt Term - years from COD	13 (including grace period)
Economic Life - years	20
Capital Replacements	0.30%/year
Present Worth Discount Rate	12.00%
Return on Equity	12.00%
Construction Escalation Rate	4.00%
Construction Interest Rate	10.00%

	@ 7/1/00	Rate of Escalation
Gas Cost - $/MMBtu (HHV)	3.00	2.00%
Variable O&M - $/kWh	0.0030	4.00%
Fixed O&M - $1000/yr	6,800	4.00%
Insurance	0.60%/year	

Operating and maintenance costs were calculated based on staffing requirements, salaries, cost of consumables, materials, spare parts and contracted services. Periodic overhaul costs derived from similar projects were levelized over the life of the plant.

In addition, Capital Replacements charge of 0.3% per year will provide reserves for future replacements which may be required during the extended plant life.

4.6 Comparison of Options and Recommendations

The performance of each option analyzed is summarized in Exhibit 4-5 and the results of the economic analyses are shown in Exhibit 4-4. The generation costs are presented for the first year of operation and levelized over the 20 year operating life of the repowered plant.

All options yield net plant heat rates in the approximate range of 6500 to 7500 Btu/kWh (LHV). The difference between the best and worst case is about 14%.

The largest net plant output, about 680 MW, is produced by Arrangement A using two 9FA class gas turbines. Arrangement B, using the Siemens V94.2 machines for Units 1 & 2 and the V94.2A for Unit 3, produces about 634 MW. Even with supplementary firing, Arrangement B, using the Mitsubishi MW701D units, produces about 10% less power than the above mentioned options.

Preliminary layouts indicate that Arrangements A and B will fit in the available space and that Arrangement C will not. In all cases, all existing fuel oil tanks will have to be removed and a new light oil storage tank built.

In order to fully utilize the waste heat from the gas turbine exhaust gases, the HRSGs were provided with three steam pressure levels, reheat sections, and economizer sections. The high pressure steam section delivers main steam at 1450 psig and 1000°F to the steam turbine inlet. The medium and the low pressure steam generated is injected into the steam turbine at the crossover points, the medium pressure into the cold reheat and the low pressure into the piping between the IP and LP turbine sections. With arrangements B and C the tie-ins are straightforward, from the HRSG to its respective steam turbine. Arrangement A requires manifolding the piping from the two HRSGs to the three steam turbines. This creates difficulties in starting up and placing in operation one steam turbine when the other steam turbines are loaded because of the differences in pressure levels and temperatures at the connection points. The use of steam bypass systems and control valves on each line will be necessary to allow start-up of a unit after a trip or a scheduled shutdown and great care on the part of the operators will be required. Even with these precautions, the reliability is likely to be compromised. We could find no experience with reheat units operating in this mode. There are many successful applications with a number of steam turbines fed from a manifold from one or several HRSGs, but all known cases are with non reheat units.

Arrangement B presents the advantages that each gas turbine/HRSG feeds its own steam turbine and their operation can be closely controlled. An additional advantage is that Arrangement B requires minimal downtime for changeover to combined cycle operation. Also, should physical inspection and testing of the existing steam turbines and generators indicate that a unit is not suitable for repowering and operation of additional 20 years, that unit may be taken out of

consideration for repowering while still allowing the other units to be used. This is not the case with Arrangement A where removing a steam turbine-genreator from the scheme requires a complete redesign of the entire configuration.

No significant differences in unit generation costs between Arrangements A and B were determined.

The required investment is highest for Arrangement C and lowest for Arrangement B using the existing Nong Chok gas turbines.

Arrangement C requires the largest investment, occupies more space than is available and yields the highest first year and levelized generating costs. Therefore, it is recommended that Arrangement C be eliminated from further consideration.

Based on the factors discussed above, Arrangement B with the Mitsubishi MW701D turbines is the recommended option, i.e., use the three existing gas turbines with new HRSGs, each tied to one of the existing steam turbines and its auxiliary equipment. Under the economic premises assumed for comparison, the Mitsubishi MW 701 D gas turbines yield a lower first year and lower levelized generation costs as compared to the use of Siemens V94.2 and V94.2A machines for Arrangement B.

The existing Mitsubishi gas turbines are of a somewhat older vintage (D class) and operate at a higher heat rate than newer machines such as Siemens V94.2 and V94.2A. Considering the cost of relocating and overhauling of these machines, the resulting levelized generation cost of the repowered installation is lower than the levelized generation cost of repowering with the recent vintage machines.

EXHIBITS

SECTION 4

4-1	Listing of Potential Gas Turbines for Repowering
4-2	Sheet 1 – Arrangement A
	Sheet 2 – Arrangement B
	Sheet 3 – Arrangement C
4-3	Sheet 1 – Flow Diagram for Arrangement A
	Sheet 2 – Flow Diagram for Arrangement B
	Sheet 3 – Flow Diagram for Arrangement C
4-4	Economic Summary of Retrofit Options
4-5	Performance Summary of Retrofit Options
4-6	Capital Cost Estimates of Retrofit Options
4-7	Heat Balance Data GE-9FA Without Duct Firing
4-8	Heat Balance Data Siemens V94.3A With Duct Firing
4-9	Heat Balance Data Siemens V94.3A With Duct Firing
4-10	Heat Balance Data Siemens V94-2 Without Duct Firing (#1 & 2)
4-11	Heat Balance Data Siemens V94-2A Without Duct Firing (#3)
4-12	Heat Balance Data MW701D Without Duct Firing (#1 & 2)
4-13	Heat Balance Data MW701D With Duct Firing (#1 & 2)
4-14	Heat Balance Data MW701D Without Duct Firing (#3)
4-15	Heat Balance Data MW701D With Duct Firing (#3)
4-16	Heat Balance Data GE 6FA Without Duct Firing (#1 & 2)
4-17	Heat Balance Data GE 6FA With Duct Firing (#1 & 2)
4-18	Heat Balance Data GE 6FA Without Duct Firing (#3)
4-19	Heat Balance Data GE 6FA With Duct Firing (#3)
4-20	Plot Plan – Arrangement A
4-21	Plot Plan – Arrangement B
4-22	Plot Plan – Arrangement A Alternative
4-23	Plot Plan – Arrangement B Alternative

Exhibit 4-1

Listing of Potential Gas Turbines for Repowering

Model& Mfg.	Year	ISO Base Rating	Heat Rate (Btu/kWh)	Pressure Ratio	Mass Flow	Turbine Speed	Exhaust Temp	Approx LxWxH
Alstom Power (France)								
GT 13 E2	1993	165 100 kW	9550 Btu	14.6	1173.0 lb	3000 rpm	975 F	10.8 x 6.4 x 5.4 m
GT 26	1994	265 000 kW	8895 Btu	30	1238.0 lb	3000 rpm	1184 F	12.3 x 5.0 x 5.5 m
Ansaldo Energia (Italy)								
V64.3	1990	63 000 kW	9693 Btu	16.1	413.0 lb	3000/3600	988 F	10.5 x 9.1 x 4.1 m
V64.3A	1996	70 000 kW	9348 Btu	16.2	419.0 lb	3000/3600	1060 F	11.0 x 4.0 x 4.8 m
V94.2	1981	159 000 kW	9890 Btu	11.1	1124.0 lb	3000 rpm	1004 F	14.0 x 12.5 x 8.4 m
Bharat Heavy Electicals (India)								
PG6101(FA)	1996	70 140 kW	9980 Btu	15	433.0 lb	5254 rpm	1109 F	
PG9171(E)	1989	123 400 kW	10 100Btu	12.3	890.0 lb	3000 rpm	1001 F	20.0 x 4.6 x 4.8 m
V64.3	1996	63 000 kW	9593 Btu	16.1	419.0 lb	3600/3000	988 F	10.5 x 9.1 x 4.1 m
V94.2	1997	159 000 kW	9890 Btu	11.1	1132.0 lb	3000 rpm	1004 F	14.0 x 12.5 x 8.4 m
V94.3A	-	265 000 kW	8865 Btu	17	1453.0 lb	3000 rpm	1186 F	12.5 x 6.1 x 7.5 m
PG9231(EC)	1997	169 200 kW	9770 Btu	14.2	1099.0 lb	3000 rpm	1036 F	22.2 x 5.1 x 5.0 m
PG9351(FA)	1996	255 600 Kw	9250 Btu	15.4	1422.0 lb	3000 rpm	1129 F	22.6 x 5.0 x 5.4 m
FiatAvio (Italy)								
TG50 D5	1985	139 977 kW	9976 Btu	14	1046.0 lb	3000 rpm	924 F	12.5 x 5.2 x 5.7 m
TG50 D5S	1991	146 915 kW	9968 Btu	14	1035.0 lb	3000 rpm	972 F	12.5 x 5.2 x 5.7 m
701F	1992	260 440 kW	9153 Btu	9.4	1446.0 lb	3000 rpm	1072 F	16.9 X 5.1 x 5.6 m
GE Energy Products Europe								
PG6101(FA)	1995	70 140 kW	9980 Btu	15	442.0 lb	5235 rpm	1090 F	93.8 x 47.0 x 34.0 ft
PG9171(E)	1987	123 400 kW	10 100 Btu	12.3	890.0 lb	3000 rpm	1001 F	15.0 x 77.0 x 39.0 ft
PG9351(FA)	1991	255 600 kW	9250 Btu	15.4	1375.0 lb	3000 rpm	1129 F	12.0 x 25.0 x 50.0 ft

Model	Year	ISO Base Rating	Heat Rate (Btu/kWh)	Pressure Ratio	Mass Flow	Turbine Speed	Exhaust Temp	Approx LxWxH
GE Power Systems (USA)								
PG6101(FA)	1993	70 140 kW	9980 Btu	15	437.0 lb	5254 rpm	1107 F	120.0 x 20.0 x 34.0 ft
PG9171(E)	1987	123 400 kW	10 100 Btu	12.3	890.0 lb	3000 rpm	1001 F	115.0 x 77.0 x 39.0 ft
PG9231(EC)	1994	169 200 kW	9770 Btu	14.2	1118.0 lb	3000 rpm	1036 F	135.0 x 53.0 x 45.0 ft
PG9351(FA)	1996	255 600 kW	9250 Btu	15.4	1375 lb	3000 rpm	1129 F	112.0 x 25.0 x 50.0 ft
Hitachi (Japan)								
PG9171(E)	1987	123 400 kW	10 100 Btu	12.3	890.0 lb	3000 rpm	1001 F	115.0 x 77.0 x 39.0 ft
PG9231(EC)	1994	169 200 kW	9770 Btu	14.2	1099.0 lb	3000 rpm	1036 F	135.0 x 53.0 x 45.0 ft
PG9331(FA)	1995	243 000 kW	9360 Btu	14.8	1422.0 lb	3000 rpm	1106 F	112.0 x 25.0 x 50.0 ft
Japan Gas Turbine (Japan)								
GT 26	1994	265 000 kW	8895 Btu	30	1238.0 lb	3000 rpm	1184 F	12.3 x 5.0 x 5.5 m
Kvaerner Energy (Sweden)								
PG6101(FA)	1993	70 140 kW	9980 Btu	15	433.0 lb	5214 rpm	1107 F	
PG9171(E)	1991	123 400 kW	10 100 Btu	12.3	890.0 lb	3000 rpm	1000 F	32.0 x 4.5 x 6.0 m
PG9231(EC)	1994	169 200 kW	9770 But	14.2	1118.0 lb	3000 rpm	1036 F	41.0 x 16.0 x 14.0 m
PG9351(FA)	1996	255 600 kW	9250 Btu	15.4	1375.0 lb	3000 rpm	1128 F	34.0 x 7.5 x 15.0 m
Mashproekt (Russia)								
UGT-110000	1999	114 500 kW	9480 Btu	14.7	787.0 lb	3000 rpm	1210 F	57 x 4.0 x 4.5 m
Mitsubishi Heavy (Japan) Industries								
M701	1981	114 090 kW	9810 Btu	14	972.0 lb	3000 rpm	1008 F	12.5 x 5.2 x 5.2 m
M701F	1992	270 300 kW	8930 Btu	17	1435.0 lb	3000 rpm	1087 F	17.3 x 5.8 x 5.8 m

Model	Year	ISO Base Rating	Heat Rate (Btu/kWh)	Pressure Ratio	Mass Flow	Turbine Speed	Exhaust Temp	Approx LxWxH
Nuovo Pignone-Turbotecnica (Italy)								
MS6001FA	1993	70 140 kW	9980 Btu	14.5	445.9 lb	5254 rpm	1096 F	
MS9001E	1976	123 400 kW	10 100 Btu	12.6	908.3 lb	3000 rpm	1010 F	22.1 x 4.5 x 6.3 m
MS9001EC	1994	169 200 kW	9770 Btu	14.4	1120.0 lb	3000 rpm	1034 F	
MS9001FA	1991	255 600 kW	9250 Btu	15.4	1406.5 lb	3000 rpm	1129 F	
Siemens, Siemens Westhinghouse (Germany)								
V64.3A	1996	68 000 kW	9830 Btu	16.2	421.0 lb	5400 rpm	1092 F	36.1 x 13.0 x 15.7 ft
V94.2	1981	157 000 kW	9920 Btu	11.1	1122.0 lb	3000 rpm	999 F	45.9 x 41.0 x 27.6 ft
V94.2A	1997	189 000 kW	9670 Btu	14	1147 lb	3000 rpm	1085 F	39.4 x 19.7 x 24.3 ft
V94.3A	1995	258 000 kW	8890 Btu	17	1398.0 lb	3000 rpm	1054 F	41.0 x 20.0 x 24.6 ft

Exhibit 4-2

Arrangement A

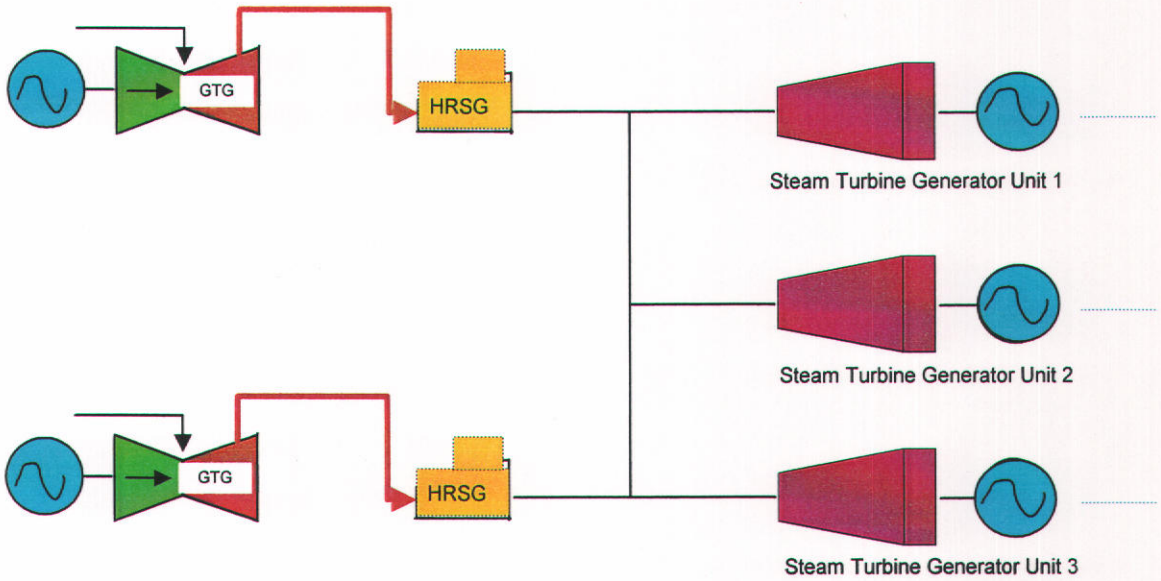

Exhibit 4-2

Arrangement B

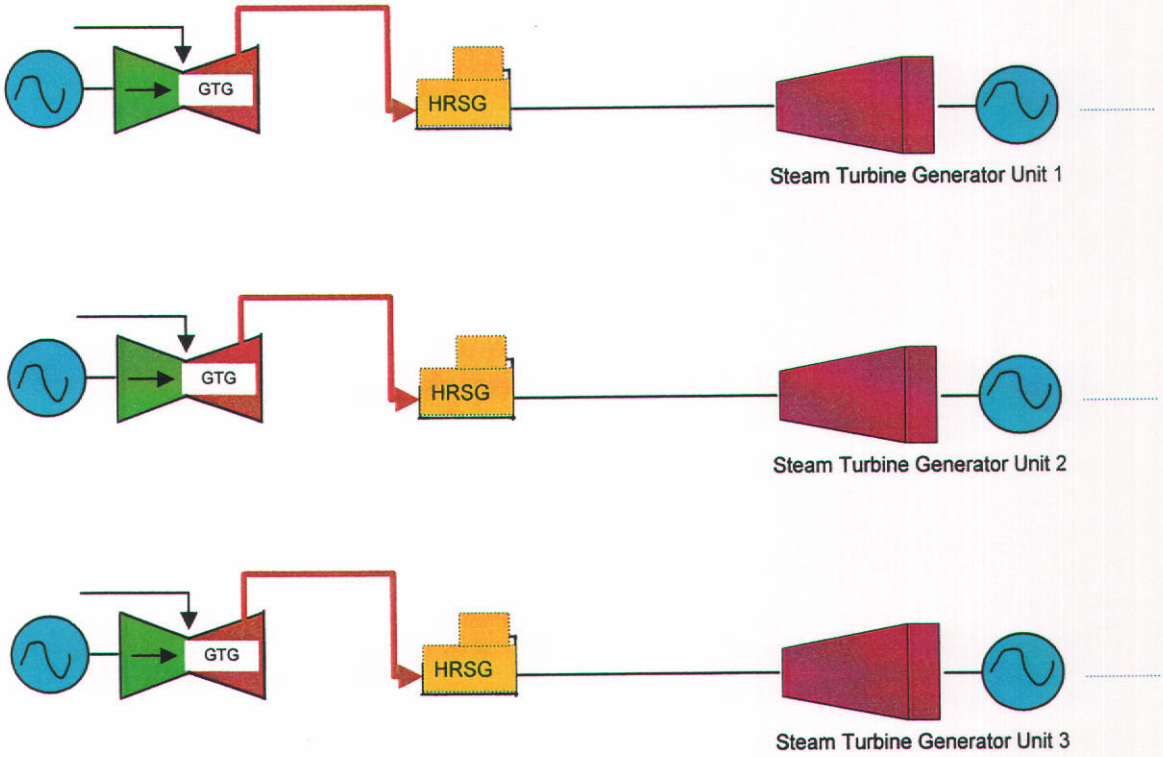

Exhibit 4-2

Arrangement C

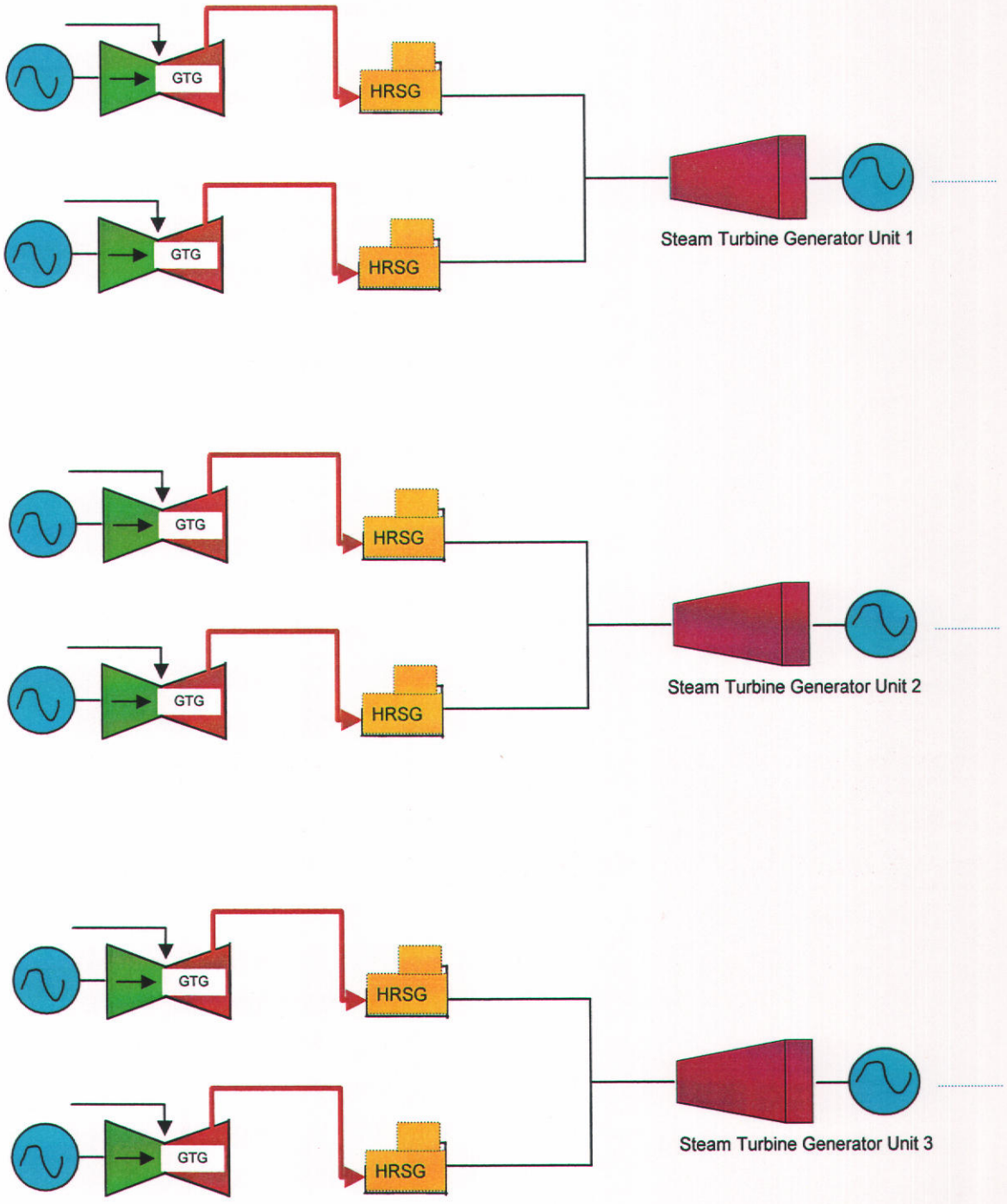

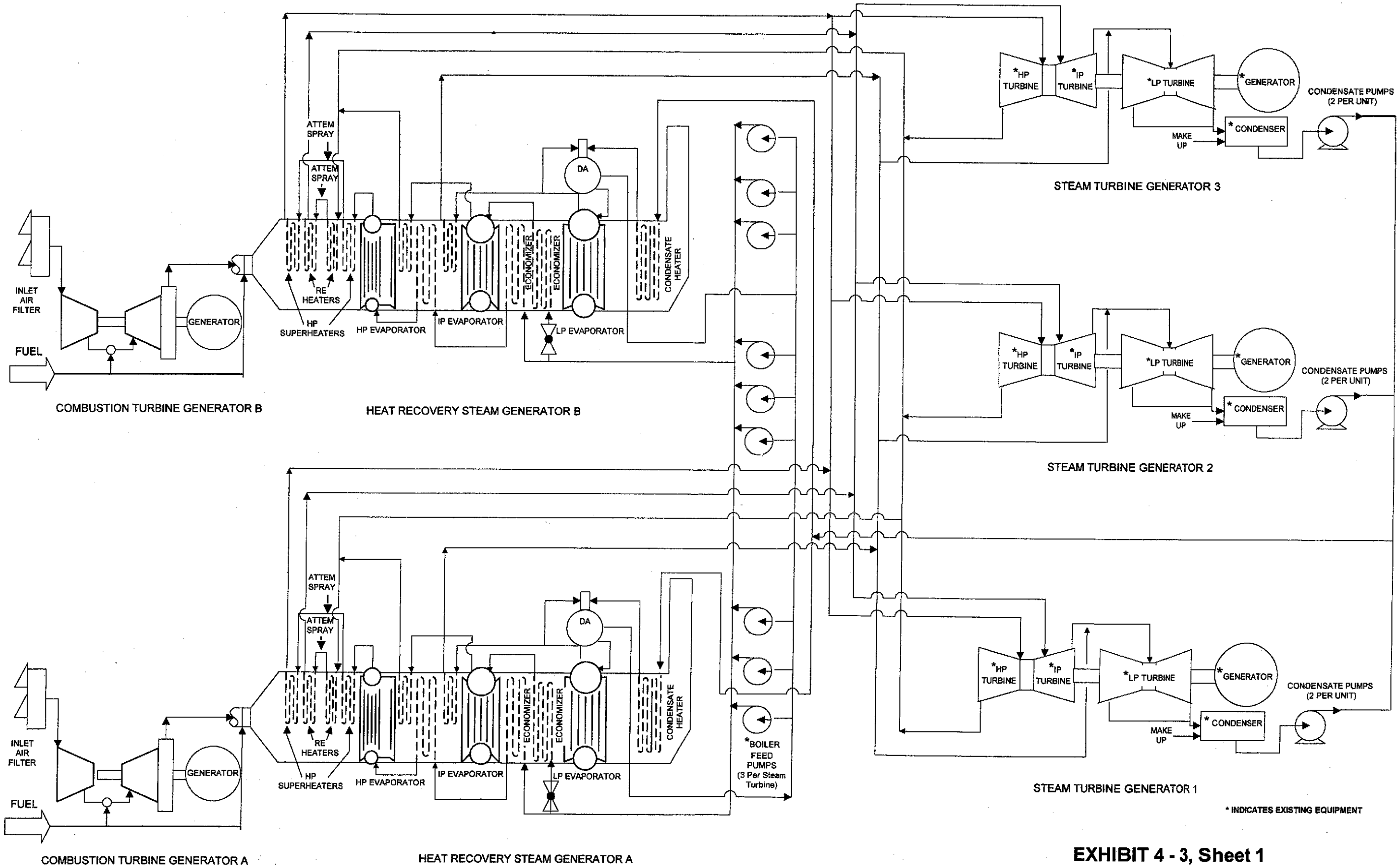

EXHIBIT 4 - 3, Sheet 1

FLOW DIAGRAM FOR ARRANGEMENT A

2 COMBUSTION TURBINES
2 HEAT RECOVERY STEAM GENERATORS
3 STEAM TURBINES

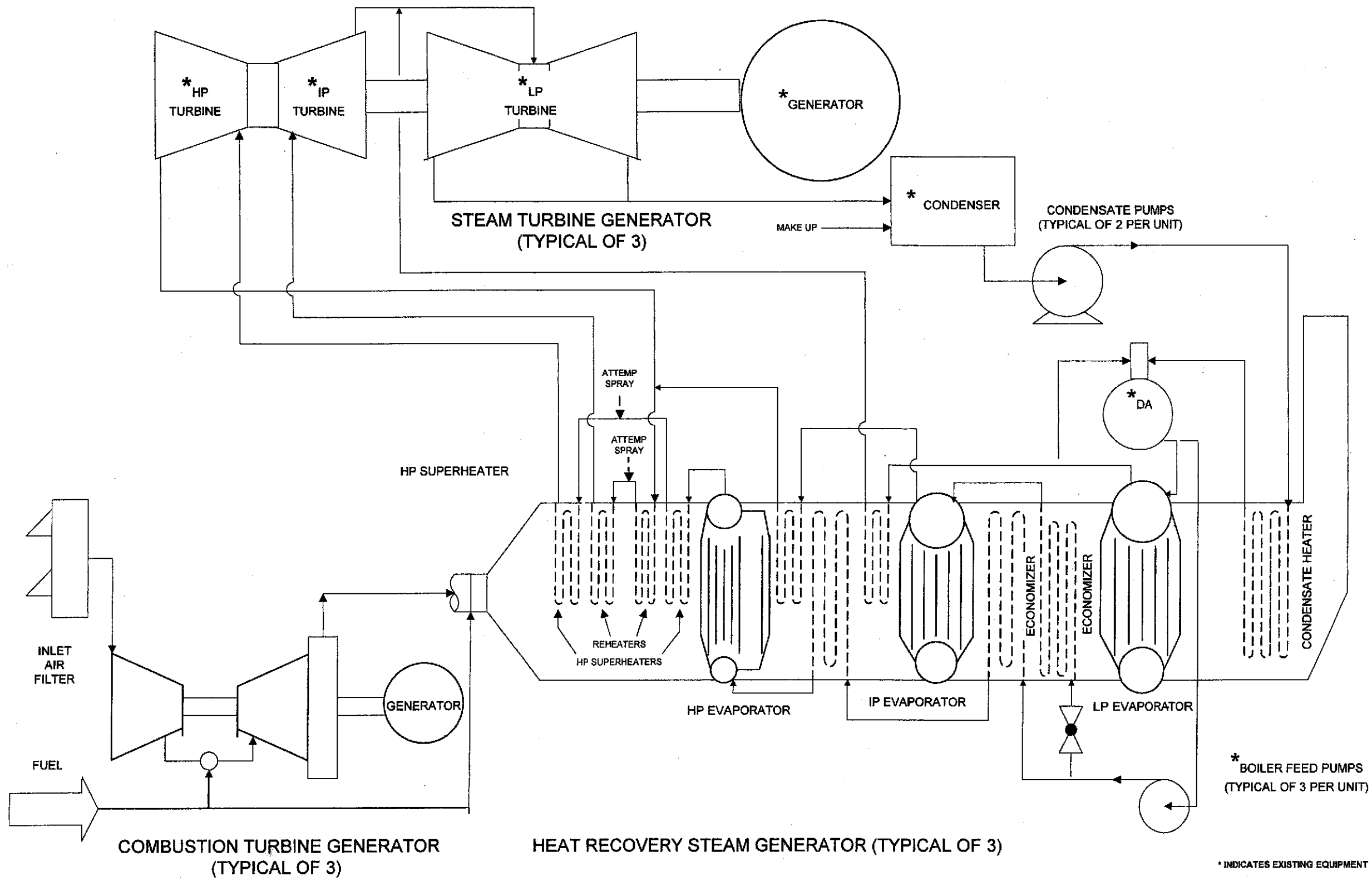

EXHIBIT 4 - 3, Sheet 2
FLOW DIAGRAM FOR ARRANGEMENT B
3 COMBUSTION TURBINES
3 HEAT RECOVERY STEAM GENERATORS
3 STEAM TURBINES

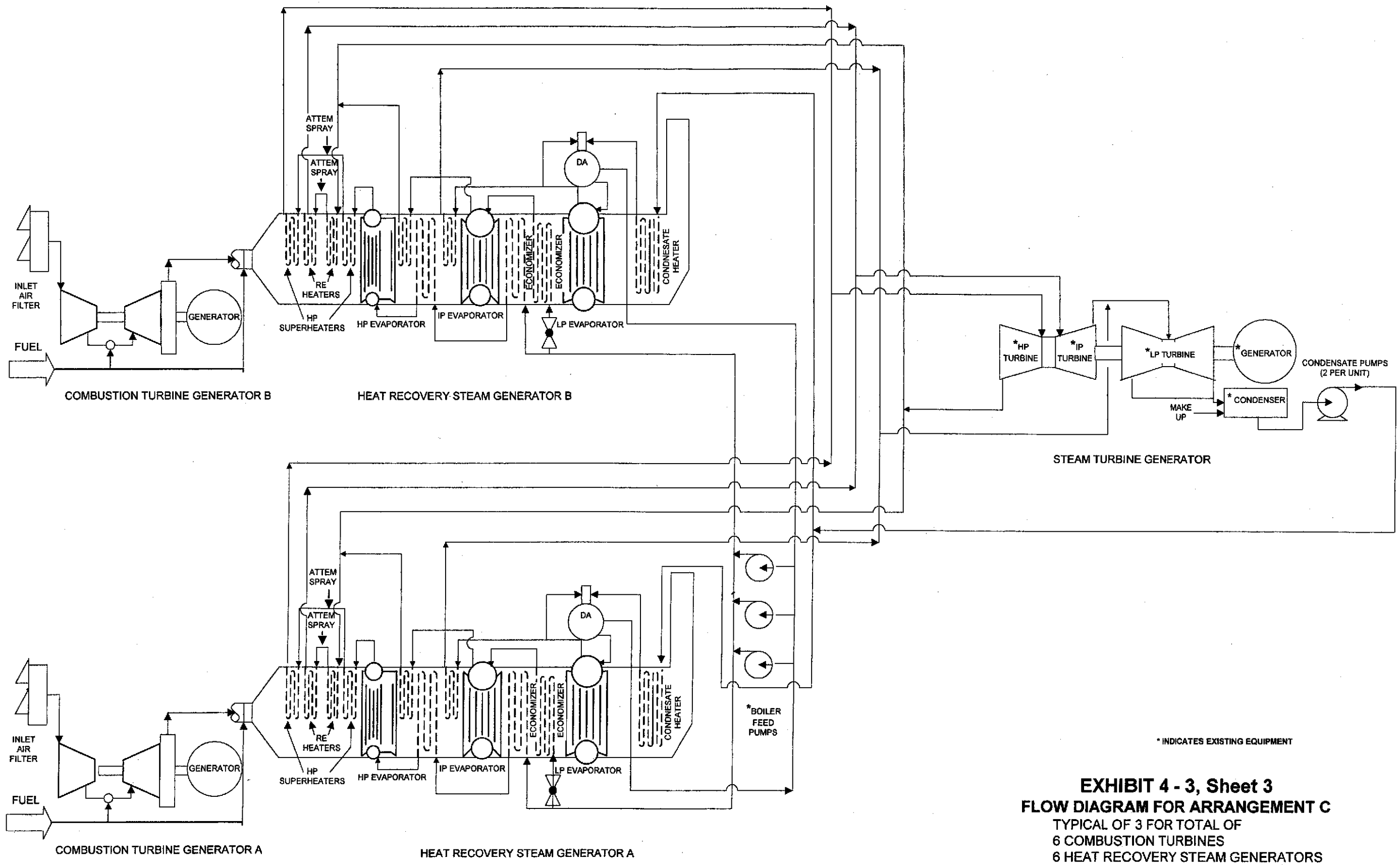

* INDICATES EXISTING EQUIPMENT

EXHIBIT 4 - 3, Sheet 3

FLOW DIAGRAM FOR ARRANGEMENT C

TYPICAL OF 3 FOR TOTAL OF
6 COMBUSTION TURBINES
6 HEAT RECOVERY STEAM GENERATORS
3 STEAM TURBINES

5.0 DESCRIPTION OF SELECTED OPTION

5.1 Conceptual Design and System Descriptions

The conceptual design of the repowered North Bangkok three unit facility is shown diagrammatically on Exhibit 5-1. Piping and instrumentation diagrams for the major process systems are presented in Appendix A. The general arrangement of repowered equipment and facilities is shown on Exhibit 5-2.

Three (3) existing Mitsubishi model MW701D combustion turbines (CT) relocated from Nong Chok will each be equipped with its own Heat Recover Steam Generator (HRSG). Each HRSG will supply steam to one existing North Bangkok Steam Turbine (ST), thus preserving the existing arrangement of the station into separate Units 1, 2, and 3.

The existing circulating water intake structure, traveling screens, circulating water pumps, condenser and piping will be overhauled and reused.

An assist cooling tower, common to all three units will be provided to reduce thermal discharges into the river during hottest months. Warm water will be taken from the discharge tunnel by means of two auxiliary circulating water pumps and delivered to the cooling tower distribution pipes.

The low and high pressure feedwater heaters will be taken out of service, their function being taken over by the HRSG. However, the deaerator and boiler feed pumps will be overhauled and used.

To make room for the new equipment, the steam generators and their auxiliaries and the fuel oil storage tanks will be demolished and removed from the site. The existing 69 kV plant switchyard and electrical step-up transformers will be replaced with a GIS type 230 kV switchyard and corresponding 230 kV transformers. The equipment removed will be used as spares for other EGAT stations.

5.1.1 Mechanical Equipment and Systems

5.1.1.1 Combustion Turbines

A. Function

The function of the Gas Turbine Generator (GTG) system is to produce thermal energy through the combustion of natural gas or distillate fuel oil and to convert that thermal energy into mechanical energy required to drive the air compressor and electric generator.

B. Major Components

Each combustion turbine generator set will have a Mitsubishi model MW701D heavy duty, industrial type gas turbine, an air inlet silencer and filter system, a hydrogen cooled electric generator rated at 181.82 MVA with a brushless excitor system and the auxiliary and support systems. The combustion turbine will have nineteen axial flow compressor stages and four axial flow turbine stages. Eighteen can type combustors will be provided for dual fuel (gas or light oil) operation. Among the combustion turbine auxiliary and support systems will be the following:

- Starting set comprised of a 1,450 kW, 6,600 V, 1,500 rpm starting motor; a 3 element, oil drainable torque converter; an auxiliary gear unit with starting device; AC motor driven turning device; and the overspeed trip device.

- Fuel oil system comprised of a set of four duplex type fuel oil transfer pump strainers and four centrifugal type transfer pumps. The pumps and strainers will be installed in parallel and will serve all three combustion turbine units. Each GTG will be equipped also with one centrifugal type main fuel oil pump, protected by a duplex strainer. Each GTG will have a positive displacement fuel oil flow meter, a drain tank and a gear type fuel oil drain pump. The fuel oil system of each GTG unit will have a fuel oil pressure control valve, a primary and a secondary throttle and isolation control valve, a minimum flow control valve, a combustor drain valve with pilot valve and manifold drain valves.

- Fuel gas system will comprise a plate orifice type flow meter; wire mesh type fuel gas strainer and a set of control valves for pressure control, a throttle valve and a gas vent valve.

  It was indicated to us that the natural gas delivered to the N. Bangkok plant will be about 500 psig and therefore, will be adequate for these combustion turbines and there will be no need to install gas compressor units.

- Lube oil system comprised of a shaft driven screw type, main oil pump; a lube oil tank in which a centrifugal, AC motor driven auxiliary pump and DC motor driven emergency oil pump are installed. The system will include a duplex lube oil filter; radiator type lube oil cooler; a centrifugal AC motor driven vapor extractor, a wire mesh type oil mist separators and a set of control and pressure regulating valves.

- Control oil system consisting of an oil tank; a plunger type, shaft driven main control oil pump; vane type, AC motor driven auxiliary control oil pump; a corrugated fin type control oil cooler; a bladder type accumulator and cartridge type supply and return filters.

- Inlet air system with an inlet air filter housing; an inertia type followed by a two stage panel type air filter; a parallel splitter type inlet air silencer and an inlet air duct. The housing will have a bypass door, ladders, platforms and handrails.

- Exhaust gas system consisting of an insulated structural steel exhaust duct; expansion joints; and a parallel splitter type exhaust gas silencer. Exhaust gases will be discharged into the heat recovery steam generators which will have their own stacks. The existing Nong Chok GTG stacks will be scraped unless the HRSG manufacturer can adapt them to their boilers.

- Water injection system for NOx emissions control consisting of a centrifugal type water injection pump, plate type orifice flow meter; filters and control valves.

- Generator cooling water system comprised of an air radiator type cooler, two wire mesh cooling water filters and two 100% capacity centrifugal type cooling water circulating pumps.

- Bleed air system with an air radiator type cooler, vane type strainers, and air pressure regulating and control valves for low and high bleed air pressure control.

- Instrument air system consisting of a screw type instrument air compressor, a 1 m^3 air receiver tank, an absorbent type air dryer and pressure regulating valve.

- Purge air system with a 1.5 m^3 air tank, and fuel oil purge air control valves.

- Sweep system consisting of a Y type sweep gas strainer, fuel gas and fuel oil nozzle sweep air control valves, isolation and vent valves.

- Compressor washing set with wash water pump, tank and filter. The set is common to and will serve all three combustion turbines. The compressor washing set is suitable for on-line as well as off-line washing. The GTG manufacturer, Mitsubishi, recommends not to use on-line washing because it will affect the reliability of the equipment.

- Generator hydrogen and carbon dioxide system, consisting of bottles, racks, manifold and control valves.
- Fire fighting system of the CO_2 gas type
- Emergency Diesel Generator of 3,000 kVA which will serve all units.

C. System Description

The combustion turbines will be arranged to allow generation in a combined cycle configuration.

Each combustion turbine will deliver approximately 128 MW gross of electric power at the design conditions with no inlet air cooling, and as shown in Exhibits 5-13 to 16 when operating in a combined cycle configuration, the three units will generate 560 MW net in the unfired mode and 603 MW in the fired mode. The system will be capable of operating from 40% of full load up to maximum continuous rating on natural gas. Fuel gas will be provided to the combustion turbine from the fuel gas supply system via the off-base gas valve module, furnished with the combustion turbine.

The repowered facility will be also capable of running on light fuel oil. Fuel oil will be provided to the combustion turbine from its fuel oil forwarding skid in the fuel oil supply system.

To prevent blade erosion, hot gas part corrosion and performance loss, a multi-stage static inlet air filtration system currently used at Nong Chok will be provided to remove particles in the inlet airstream. Air inlet and exhaust silencing features will be included to control far field sound levels.

Start-up and loading of the combustion turbine will be by either fully automatic or fully manual means and will follow the manufacturer's furnished procedure.

The system will be capable of starting on either natural gas or oil. Operating controls for the combustion turbine are included in the Turbine Control and Instrumentation system. Operation and monitoring functions will normally be performed from the central control room.

NOx emissions will be controlled by water injection into the combustion chambers. Investigations were also made regarding the practicality and cost of retrofitting the existing Nong Chok combustion turbines with dry low NOx combustors. The result of these investigations indicate that to install dry low NOx burners, the turbine casings will have to be replaced

with a new special design that has not been developed yet. We could not find any such retrofit done for these machines and, therefore, concur with Mitsubishi's recommendation to use water injection for NOx control. To meet the environmental regulation, the ratio of water to fuel by weight (W/F) shall be one. The combustors of the Nong Chok MW701D turbines have the provisions needed for water injection.

Investigations were made regarding the use of air inlet cooling. The results indicate that because of the climatic conditions, evaporative cooling does not improve the overall efficiency sufficiently to warrant the retrofit work needed. The inlet system of the MW701D machines is not designed to accept an air inlet cooling system and would need to be modified to accommodate one.

5.1.1.2 Heat Recovery Steam Generators

A. Function

The Heat Recovery Steam Generator (HRSG) system provides for the transfer of heat from the exhaust of the combustion turbine to the feedwater and steam. This heat transfer produces high-pressure, intermediate-pressure, and low-pressure steam at the pressures and temperatures required by the steam turbine. Three (3) HRSGs will be provided, each taking exhaust from one (1) MW701D combustion turbine. The HRSGs will be designed in accordance with the cycle heat balances depicted in Subsection 5.2.

B. Major Components

Each Heat Recovery Steam Generator will be triple-pressure, reheat, supplemental fired and will have the following principal components:

- High-pressure (HP) steam drum
- High-pressure (HP) superheater
- High-pressure (HP) evaporator
- High-pressure (HP) economizer
- Reheaters
- Intermediate-pressure (IP) steam drum
- Intermediate-pressure (IP) superheater
- Intermediate-pressure (IP) evaporator
- Intermediate-pressure (IP) economizer
- Low-pressure (LP) steam drum
- Low-pressure (LP) superheater
- Low-pressure (LP) evaporator
- Condensate preheater
- Exhaust stack

- Gas fired duct burner for supplemental firing
- Structural steel structure, platforms, ladders, and stairs,

C. System Description

The triple-pressure, reheat HRSGs will be bottom-supported, natural circulation type boilers. Vertical rather than horizontal configuration was selected because of space consideration. The HRSGs will be fitted with gas-fired duct burners which provide additional steam generation capability. The additional steam is used to generate approximately 43 MW of incremental capacity in the fired mode.

Heat transfer will be by convection from the hot combustion turbine's exhaust gas to feedwater/steam. The feedwater/steam will flow inside finned tubes, with the tubes arranged in rows. Gas flow will be in the vertical direction across the tube rows.

Condensate will be provided to the condensate preheater section of the HRSGs by the condensate pumps. The condensate will flow through the condensate preheater to the deaerator and from the deaerator to the LP steam drum. The saturated water will next flow from the LP steam drum through downcomers to the inlet headers of the LP evaporators. The saturated water flows upward through the LP evaporator tubes by natural circulation. Saturated steam will form in the tubes as energy from the combustion turbines exhaust gas is absorbed. The LP saturated liquid vapor mixture will next return to the LP steam drums where the two phases will be separated by the steam separators in the drums. The saturated water will return to the LP evaporators, while the vapor passes to the LP superheaters. LP superheated steam is conveyed to the LP steam turbine admission point and to the deaerator.

Feedwater to LP drum will be by gravity from the elevated deaerator storage tank, unless detailed calculations during the design stage indicate that for the selected HRSG a pumped system is required.. Feedwater from the deaerator will also be provided to the suction of the boiler feed pumps in the Boiler Feed System. The boiler feed pumps, in turn, provide HP feedwater to the HP economizers and IP feedwater to the IP economizers.

The intermediate-pressure feedwater will flow through the IP economizers to the IP steam drums where a saturated liquid state will be maintained. The saturated water will next flow from the IP steam drums through downcomers to the inlet headers of the IP evaporators. The saturated water flows upward through the IP evaporator tubes by natural circulation. Saturated steam will form in the tubes as energy from the combustion turbine's exhaust gas is absorbed. The IP saturated liquid vapor mixture

will next return to the IP steam drums where the two phases will be separated by the steam separators in the drums. The saturated water will return to the IP evaporator while the vapor passes to the IP superheater inlet. The saturated steam (vapor) will next pass through the IP superheater and through the intermediate-pressure steam supply line with the cold reheat piping. The steam will then pass to the reheater and into the hot reheat steam supply line where it is conveyed to the IP steam turbine.

The high-pressure feedwater in the HRSGs will flow through the HP economizers to the HP steam drums where a saturated liquid state will be maintained. Saturated water will next flow from the HP steam drums through downcomers to the inlet headers of the HP evaporators. The saturated water will flow upward through the HP evaporator tubes by natural circulation. Saturated steam will form in the tubes as energy from the combustion turbine's gas is absorbed. The HP saturated liquid vapor mixture will return to the HP steam drums where the two phases will be separated by steam separators in drums. The saturated water will return to the HP evaporators, while the vapor passes to the HP superheater inlet. The saturated steam (vapor) will next pass to the HP superheaters and into the high-pressure (main) steam supply line where it is conveyed to the HP steam turbine.

Exhaust gas from the combustion turbines will be routed through insulated ductwork where it will first pass through the superheater, evaporator, and economizer sections of the HRSGs. The gas will then be discharged to the atmosphere through the HRSG exhaust stacks.

Safety relief valves will be provided for over-pressure protection of the HRSGs. The number and types of safety valves will be established by the HRSG manufacturer. Each safety relief valve will be vented through a separate stack for safe discharge to the atmosphere. Other vents for HRSG components such as the steam drums, superheaters, and economizers will also be furnished by the HRSG manufacturer. High-pressure vents will be furnished with double isolation valves, and vent piping will be terminated at a location which ensures safe discharge to the atmosphere. The HP, IP and LP superheater outlet header vent valves will be equipped with motor operators. The motor operators will allow remote operation from the control room during unit startup and shutdown.

Nitrogen for blanketing the HRSGs during periods when the HRSGs are inoperative will be supplied to the HRSG components through selected connections as determined by the HRSG manufacturer. The nitrogen supply lines will include motor-operated isolation valves so that nitrogen blanketing can be accomplished remotely from the control room.

HRSG blowdown drains will be directed to the boiler blowdown tanks where flashing steam will be separated from water.

5.1.1.3 Steam Turbine Generators

The existing steam turbine generators will be inspected, tested and overhauled before reuse in the repowered combined cycle configuration. The recommended inspections and testing are described in subsection 2.3.13, the main objective of which is to assure that the turbine generators do not conceal defects that would affect reliable operation for 20 additional years. This test work shall be done as the first step of the repowering program, preferably by a specialized contractor with modern testing apparatus. Special attention shall be given to boresonic and magnetic particle examination of rotor shafts, metalographic replication examination of components subject to high temperature creep, and dye penetrant examination of shells, nozzle blocks and blading.

Recommendations for upgrading and overhauling are detailed in Section 2 and are briefly discussed below.

The mechanical hydraulic control system will be upgraded to an electrohydraulic system what will provide reliable control with interface with the DCS. Reheat intercept valves will be overhauled and provisions made to equalize the pressure across the valve seats to ease reopening of the valves after testing.

The gland seal system will be modernized by installing three pneumatic operated steam supply valves and a new control system for each of the steam turbines. Low pressure water seals will be replaced with steam seals. Existing steam seals that are worn or deformed will be replaced. Bearings and lubricating oil system will be overhauled.

Extraction points that will not be used any longer will be capped and the extraction steam piping removed. The extraction line to the deaerator will remain in service.

Nozzle blocks and blading will be inspected and any needed repairs made. Cracked stay bars and ribs will be replaced or repaired by welding.

The electric generators will be inspected and tested. The tests will include condition of winding insulation and conductors, presence of hot spots, winding bracing and wedges, etc. The hydrogen seals and control system will be inspected and overhauled. The retaining rings will be inspected to the extent possible. Replacement of the retaining rings as a preventive measure is costly and not warranted unless, on inspection, defects are observed.

Replacement of the Units 1 and 2 excitors with brushless type is very costly and judged not warranted. Instead, the excitors shall be overhauled and defective components replaced.

The turbine thermal insulation will be replaced with a "mallet" type that can be reused after opening the turbine for inspeciton or repairs.

5.1.1.4 Main, Reheat and Low-Pressure Steam

A. Function

The Main, Reheat and Low-Pressure Steam Systems transports main, reheat, and low-pressure (LP) steam from the triple-pressure heat recovery steam generator (HRSG) superheater outlets to the inlet of the steam turbine stop/control valves or through the steam turbine bypass lines to the condenser. A bypass line is provided for each of the three pressure levels which will convey steam produced during base load operation to the condenser. Drip pots protect the steam turbine against water damage by removing moisture produced by condensation in the steam piping.

B. Major Components

- Piping and valves
- Flow measuring equipment
- Steam desuperheaters

C. System Description

Main steam from the triple-pressure HRSGs will flow through the system piping to the steam turbine stop valve inlet. Intermediate-pressure cold reheat steam will flow from the HP steam turbines exhaust to the HRSG reheater. Intermediate-pressure reheat steam from the triple pressure HRSGs will flow through the system piping to the intermediate-pressure steam turbine admission point. Low-pressure steam from the triple-pressure HRSGs will flow through the system piping to the low-pressure steam turbine admission point.

The steam piping will be provided with drip pots near the steam turbine stop/control valve for removal of condensate from the steam lines. Drip pots will also be provided at all low points in the piping. Condensate collected in the drip pots will be directed to the flash tank or to the condenser. Level controls on the drip pots operate a power-operated discharge valve for condensate discharge.

Steam turbine bypass lines will provide steam turbine bypass capability. The steam bypass lines will be routed to the condenser. Control valves and desuperheaters will be provided as required to reduce the steam pressure and temperature conditions to the condenser. Desuperheating spray water is supplied by the boiler feed pump. Two types of bypass

systems may be considered. One bypass system incorporates an integral pressure reducing valve and desuperheater spray nozzles, while the other incorporates a separate pressure reducing valve and water spray nozzle. The final system configuration used will be determined during the design phase of the project. Both systems are acceptable and have been used worldwide for this application. The bypass system will be designed to allow startup of a unit without "off spec" steam entering the steam turbine.

Steam flow measuring instrumentation will be provided for steam production information. Flow nozzles with differential pressure instrumentation will be used for measurement.

Safety valves and automatic vent valves and piping included with the Heat Recovery Steam Generator will be provided for system operation and over-pressure protection, as required.

D. Basis for Design

The steam systems will be designed with appropriate margins for steam flow with the turbine valves wide open. The steam bypass systems will be designed to bypass to condenser 50% percent of the steam produced at full load.

5.1.1.5 Temporary Blowout

A. Function

The temporary blowout system provides a temporary flow path for steam blowing to atmosphere through the main steam piping. The steam blowing process serves to clear the superheaters and steam piping of mill scale, slag, weld beads and other similar foreign material prior to initial operation of the steam turbine after the repowering conversion.

B. Major Components

The temporary blowout system will consist of the following major components:

- Temporary blowout piping
- Steam stop/control valve blowout cover and blanking fixtures
- Temporary blowout control valves
- Temporary blowout silencer

C. System Description

Steam blowing will include the following portions of the HRSGs and system piping:

- Cleaning of the heat recovery steam generators (HRSG) high-pressure (HP) superheaters and HP main steam piping to the HP steam turbine stop/control valve.
- Cleaning of the HRSGs intermediate-pressure (IP) superheaters, reheaters and reheat steam piping to the IP steam turbine admission point.
- Cleaning of the HRSG low-pressure (LP) superheater and LP steam piping to the LP steam turbine admission point.

The construction of the HRSG and dependence on the combustion turbine for heat input requires that all piping for each unit be cleaned simultaneously.

The steam blowing process will require a temporary blowout control valve for each circuit. These valves will be flanged gate valves with hardened surfaces, complete with hydraulic actuators and hydraulic pumping/accumulator package.

D. Main and Reheat Steam Blowout

The main steam and reheat steam stop/control valves will be equipped with temporary blowout covers to allow discharge of steam to atmosphere. The main steam blowout cover piping will be connected to the cold reheat piping. Temporary blowout piping will be connected to the reheat blowout cover and routed to a safe atmospheric discharge area.

The steam blowing process will be accomplished by supplying steam from the HP steam drums through the associated superheaters to the high-pressure steam piping. The steam will be discharged through the steam turbine HP stop/control valve to the cold reheat piping where it will flow through the reheater to the reheat stop/control valve. Steam from the reheat stop/control valve will be discharged to the atmosphere. Control of the steam flow will be accomplished by opening and closing the temporary blowout valve. The piping cleanliness will be monitored by examination of a polished bar stock specimen.

E. Low-Pressure Steam Blowout

Temporary blowout covers will be installed in the LP steam piping to protect the steam turbine and to allow discharge of steam to atmosphere.

Temporary blowout piping will be connected to this temporary blowout cover and routed to a safe atmospheric discharge area.

The steam blowing process will be accomplished by supplying steam from the HRSG steam drums through the associated superheaters to the steam piping. The steam will be discharged through the temporary blowout piping to the atmosphere. Control of the steam flow will be accomplished by opening and closing the temporary blowout valve. The piping cleanliness will be monitored by examination of a polished bar stock specimen. Steam blow motor operated valves will be coordinated to minimize steam blow time and cycling operation of the combustion turbine.

5.1.1.6 Boiler Feed System

A. Function

The Boiler Feed pumps transfers feedwater from the existing deaerator storage tank to the high-pressure (HP) and intermediate-pressure (IP) sections of the heat recovery steam generators (HRSGs), as applicable.

B. Major Components

The Boiler Feed system will consist of the following major components:

- Three (3) existing 50% capacity, motor driven boiler feed pumps
- Feedwater regulating control valves
- Interconnecting piping, valves and accessories

C. System Description

The HRSG will have a dedicated boiler feed system consisting of three half capacity boiler feed pumps with the associated interconnecting piping, valves and accessories. Feedwater from the deaerator tank will be pumped to the intermediate pressure drum and to the high pressure drum by two of the 50% capacity boiler feed pumps. Control of pump flow to the HRSG intermediate-pressure section will be maintained by one full-capacity intermediate-pressure feedwater regulator. Likewise, control of pump flow to the HRSG high-pressure section will be maintained by one full-capacity, high-pressure feedwater regulator. A startup feedwater regulator will be provided in parallel with the high-pressure feedwater regulator and intermediate-pressure feedwater regulator for startup and low load operation.

The intermediate-pressure and high-pressure feedwater regulators will operate based on a three-element control system which considers the respective drum level, feedwater flow and steam flow. Recirculation of

feedwater, from the discharge of the boiler feed pumps, will be provided to prevent damage to the pumps during periods of low feedwater flow. Recirculation flow from the boiler feed pumps will be routed to the deaerator.

Shutoff valves and a check valve will be provided on the intermediate pressure discharge of the boiler feed pumps for isolation. A check valve and gate valve will be provided on the high-pressure discharge of each boiler feed pump for standby pump operation and isolation. Startup suction strainers will protect the pumps against damage by foreign material in the suction piping.

Branch lines will be provided from the HRSG feedwater piping to supply spray water to the HRSG steam attemperators and the HP and IP steam bypass desuperheaters.

D. Basis for Design

The existing boiler feed pumps will be overhauled and reused.

The boiler feed pumps are each rated for 725 gpm (333,000 lbs./hr), differential pressure of 1,710 psi operating at 4,400 rpm. The pumps have 8 stages, the last four stages have the maximum diameter impeller (10 $^1/_8$" diameter) that fits the casing. Stages one through four are provided with 9 ¾" diameter impellers, the casing accepts 10 $^1/_8$" diameter impellers for all eight stages. Minimum diameter is 9 $^1/_8$".

To match the new system requirements, the impellers can be modified to increase or decrease the discharge pressure by either trimming the impeller diameter or replacing one or several stages with a different diameter impeller.

As shown on the heat balances Exhibits 5-13 and 5-14 the boiler feed flow in the repowered configuration with supplementary firing at full load is 515 gpm or about 70 percent of the flow rate of 725 gpm in the previous configuration. To better match the pump output with the system needs, either the impellers will be trimmed or the excess pressure will be absorbed in the control valves and piping system. Allowing higher pressure drops in the HRSG and in the feedwater and main steam piping will lower the cost of the HRSG and piping.

5.1.1.7 Condensate System

A. Function

The condensate system receives and condenses the steam turbine exhaust steam, bypass steam and other reclaimable steam. In addition, the system serves as a collection point for cycle drains and cycle makeup which are reclaimable as condensate. The system provides a flow path for condensate from the condenser hotwell to the HRSG.

B. Major Components

The Condensate system will include the following major components:

- Two full-capacity, multistage, vertical can type condensate pumps
- Piping, valves, controls and instrumentation necessary for proper system operation.

In the repowered configuration, the condensate flow is substantially larger than that provided by the existing condensate pump design. The possibility of leaving the existing exterior can and replacing the pump internals was investigated and found impractical. The increased flow will require a higher submergence. There is no space to put an additional stage to deliver the required head with the increased flow. The electric motor needs to be replaced with one of larger size. It is, therefore, required to replace the condensate pumps with new ones designed for a flow of 1,200 gpm and 420 ft head with a 200 HP electric motor drive.

C. System Description

Condensate supply will be pumped to the HRSG condensate preheaters. The preheaters will normally operate with a continuous recirculation flow to control the condensate preheater outlet gas temperature. Condensate supply to the deaerator will be directed under the control of separate condensate regulator valves. The regulator valves will operate from a three-element control system which considers feedwater/steam flow, condensate flow and the deaerator level. Each valve will modulate to maintain condensate flow proportional to feedwater/steam flow and also maintain a constant water level in the deaerator storage tank.

5.1.1.8 Circulating Water System

A. Function

The Circulating Water System provides cooling water to the condenser for condensing the steam turbine exhaust steam. The existing system takes suction at the Chao Phraya river intake which is common to all three units and discharges heated effluent back to the river. The proposed new system will be equipped with an assist cooling tower, also common to all three units, to reject the excess waste heat to the atmosphere.

B. Major Components

The proposed Circulating Water System will combine existing and some new components as follows:

- One single-shell, two-pass, single-pressure surface condenser (each unit) (existing, will be retubed)
- Two half-capacity, vertical, wet pit, circulating water pumps (each unit) (existing)
- Circulating water pump intake structure (common) (existing)
- Trash racks and screens (existing)
- Piping, valves, expansion joints, and accessories (existing)
- Condenser vents and drains (existing)
- Assist cooling tower (common) (new)
- Two half capacity, vertical pit, auxiliary circulating water pumps (common) (new)
- Auxiliary circulating water pump intake structure with screens (common) (new)

C. System Description

Each existing turbine exhausts into the condenser shell where the steam is condensed by the circulating water passing through the condenser tubes. Condenser vacuum is initially developed by the condenser exhauster in the Condenser Air Extraction System. Recoverable steam and condensate from cycle drains, the gland condenser, and the turbine sealing steam bypass are also routed to the condenser shell.

The existing condenser includes new distribution headers in the condenser neck to receive steam turbine bypass of high-pressure, intermediate-pressure, and low-pressure steam into the condenser after the pressure and temperature of the steam have been reduced as required by the condenser.

The condenser steam and other returns are collected in the condenser hot well. The hot well provides condensate storage at the saturation temperature corresponding to the vacuum in the condenser shell.

The assist cooling tower will be a concrete or steel structure and will be located above the existing discharge canal. Two half capacity auxiliary circulating water pumps will take heated water from the discharge canal and deliver it to the cooling tower which will dump the cooled water into the discharge canal below, thus, there will be no need to have a cooling tower basin.

The discharge canal will be provided with a dam and an adjustable gate that will permit regulation of the flow that will bypass the assist cooling tower and prevent backflow of the cooled water to the auxiliary circulating water intake structure.

5.1.1.9 Condenser Air Evacuation System

A. Function

The Condenser Air Evacuation System provides for the venting of the condenser steam space for removal of non-condensable gases during steam turbine generator operation. This system also provides the capability to rapidly reduce the condenser pressure from atmospheric before unit startup and admission of steam to the condenser. The vacuum breaker valve allows air to be vented into the condenser to reduce the roll-down time of the steam turbine generator during unit shutdown.

B. Major Components

The Condenser Air Evacuation System will consist of the following major components per unit:

- A two stage steam-jet ejector (existing)
- A single-element hogging jet (existing)
- One condenser vacuum breaker valve (existing)
- A new mechanical vacuum pump which will operate in parallel with the present steam jet ejectors

C. System Description

Each condenser evacuation unit will consist of a two-stage steam jet ejector as well as a parallel water-sealed vacuum pump and motor, a separator/silencer, a seal water recirculation pump and motor, a seal water heat exchanger, and associated integral piping, valves, and controls and instrumentation. Cooling water for the seal water heat exchangers will be supplied from the cooling water system. Condenser exhauster make-up seal water will be supplied from the condensate system. The vacuum pump will be started by remote pushbutton from the control room and will be used for holding requirements. Hogging jet will be used for startups.

The condenser air extraction equipment will have two operating modes: hogging and holding. Hogging involves removing large amounts of air from the condenser before the startup of the steam turbine or, under unusual conditions, during normal operation. Holding involves the

removal, at low condenser pressure, of any non-condensable gases in the condenser during normal operation.

The three condenser exhauster units will be connected to the condenser shell via a common suction header with appropriate valving. During normal holding operation, only a mechanical vacuum pump will be required to operate with the steam jet exhauster acting as a standby. During hogging, which occurs during unit startup, the isolation valves in the common suction header will be opened and both condenser exhausters, as well as the hogging jet, will be operated.

The non-condensable gases are drawn through piping from the surface condenser shell to the condenser exhausters. The condenser exhausters compress the non-condensables and discharge them to the separator at a pressure slightly above atmospheric pressure. Any entrained moisture discharged form the condenser exhausters is collected in the separator and reused as seal water in the condenser exhausters. The separator will be furnished with automatic level controls to add makeup seal water or dump excess seal water as required. The dry non-condensables flow from the separator through pipes to the atmosphere. A silencer integral with the separator will be used to reduce the noise level of the discharge.

D. Basis for Design

The single vacuum pump recommended to be added to the existing exhaust system will be sized to provide for normal air removal requirements without any margins otherwise required by HEI standards.

The condensate storage tank will receive demineralized water as makeup from the demineralized water storage tank included in the cycle makeup and storage system. The demineralized water will be transferred from the demineralized water storage tank to the condensate storage tank by gravity and by the demineralized water transfer pump (included in the Cycle Makeup and Storage System) and the condensate storage tank level control valve.

The condensate hot well will supply condensate by gravity to the suction of the vertical, can type, single speed, condensate pumps. The piping from the hot well will be routed in a trench to the below grade pump suction connections. The condensate pumps provide condensate to the HRSG condensate preheater.

A basket type strainer will be included in the suction line to each condensate pump to remove any debris carried over from the condenser.

The flow from the condensate pumps will be maintained above a minimum value. This is necessary to ensure adequate cooling water flow through the gland seal condenser to allow proper operation of the steam turbine seals and drains and to ensure adequate flow through the condensate pumps for stable operation. Recirculation of condensate from a point downstream of the gland condenser to the condenser will be provided to maintain minimum flow when the condensate requirements of the HRSGs are not sufficient to satisfy the minimum flow requirements of the condensate pumps and gland seal condenser.

The Condensate System will also supply condensate, as required, for exhaust hood spray, condenser neck spray, gland seal leakoff piping spray, vacuum pump seals, chemical injection tank fill, closed cycle cooling water head tank makeup, condensate samples for the steam cycle sampling and analysis system and condensate pump seal water.

5.1.2 Electrical Equipment and Systems

5.1.2.1 General

The electrical distribution system at North Bangkok Power Plant after repowering the existing three STG's and adding three GTG's relocated from Nong Chok is shown on Exhibit 5-4, key one line diagram drawing E0020, Sheets 1 and 2.

The system configuration maintains the existing auxiliary system arrangement of the power plant adjusted for removing of three existing steam generators and adding of one assist cooling tower and associated two auxiliary circulating water pumps. The three relocated GTG's will have a complete independent electrical auxiliary system with no connections to the existing auxiliary system for steam turbine generators, except for using the same source of power delivery to the 230 kV system through the new plant 230 kV GIS switchyard.

5.1.2.2 Repowering the Existing STG's

The electrical systems and equipment provided for repowering of the existing plant will be as follows:

The replacement of the existing plant 69 kV switchyard with a new plant 230 kV switchyard GIS type. The new plant 230 kV GIS type switchyard will consist of SF6 gas-insulated switchgear with an arrangement as shown on key one line diagram Exhibit 5-4, Sheet 1. The proposed switchgear is suitable for indoor application and has double main bus with transfer bus configuration designed for a rated system voltage of 230 kV.

The rated nominal current for feeders will be 1200A and busbars 2000A. The two connections with EGAT 230 kV substation are rated 2000A each. The switchyard will be furnished complete with local control cubicles, protection relay

panels, DC/AC systems. The complete switchyard will be supplied in a building with overall dimensions of about 10m (width) x 30m (length) and 5m (height).

The replacement of overhead connection to the new plant 230 kV switchyard of the step-up transformers and auxiliary reserve transformer with new underground cables rated 230 kV.

Interconnect the new plant 230 kV switchyard to new EGAT 230 kV substation located adjacent to MEA substation. This new EGAT substation will be GIS type.

Two connections between new plant 230 kV switchyard and new EGAT 230 kV substation will be provided. One connection will be by underground cables rated 230 kV. The second connection will be underground by cables rated 230 kV routed up to a 230 kV transmission tower where the connection will be changed from cables to an overhead 230 kV line. This change will be accomplished by using 230 kV cable terminals and structure with associated 230 kV lightning arrestors.

The replacement of the three existing main step-up transformers for the existing STG units, with new step-up transformers to be connected to the new plant 230 kV switchyard.

The replacement of the auxiliary reserve transformer with a new transformer to be connected to the new plant 230 kV switchyard.

Provisions of fire walls and deluge fire protection in accordance with NFPA for all step-up transformers and auxiliary reserve transformer.

The three 13.8 kV/3.3 kV unit auxiliary transformers and one 11 kV/ 3.3 kV emergency reserve transformers will be maintained.

The four 3.3 kV/416 V unit substation transformers will be maintained.

Addition of two new 3.3 kV/416 V cooling tower transformers.

The replacement of existing 3.3 kV switchgear for all three units with new switchgear assemblies.

Addition of 416 volt switchgear and MCC assemblies for cooling tower area.

The 416 kV motor control centers will be maintained; the MCC's in the existing water treatment building will be upgraded and new MCC will be provided for the new water treatment equipment.

New revenue and backup meters will be provided for all three STG and GTG units.

The replacement of the existing protection relays with new state-of-the-art protection relays.

The manual synchronization of all three STG units will be retained and new automatic synchronization will be added for the synchronizing of the plant to the new plant 230 kV switchyard.

DC, UPS and Diesel Generator emergency systems will be retained.

As necessary, the existing power cables for 3.3 kV and 416 V power supplies will be replaced with new cables.

New cable trays for power cables will be provided as needed, segregated by voltage levels.

New designated instrumentation and control cable trays will be provided for the new instrumentation and controls added for repowering of the plant. Replacement of some existing cable trays damaged by corrosion, as required by the repowering design will be implemented.

5.1.2.3 New GTG Plant

The Nong Chok combustion turbine generators will be relocated to North Bangkok plant. They are rated approximately 129.4 MW at base load and 136.5 MW at peak load with 0.85 power factor, 3 phase, 50 Hz, 3000 rpm, hydrogen cooled and 32.7°C ambient temperature. The generator package includes the hydrogen cooled generator, vibration monitoring, and generator excitation compartment.

The packaged electrical control modules located adjacent to other accessory modules will consist of the following: battery system (battery and battery chargers), turbine control panel, generator control panels, voltage regulator, motor control centers and various auxiliary panels. The modules will be provided with lighting and air conditioned and positively ventilated.

One unit auxiliary transformer will be furnished for each GTG1 and GTG2 to service all three GTG units. Total of two unit auxiliary transformers will be installed.

One cranking turbine generator will be provided with generator circuit breakers that will be relocated from Nong Chok to North Bangkok.

Three new step-up transformers will be relocated from Nong Chok to deliver the power to the new plant 230 kV switchyard. Each step-up transformer will be connected by underground 230 kV cables to the new plant 230 kV switchyard.

As a minimum, the major components of the electrical distribution system will be: three GT generators, three generator circuit breakers, three generator step-up transformers, two unit auxiliary transformers, medium and low voltage switchgear, low voltage motor control centers, and GTG startup systems.

Each GT generator will have its own dedicated electrical distribution system, with its dedicated cranking motor.

The unit auxiliary transformers will supply startup auxiliary loads including the starting cranking motor.

The generator, generator circuit breaker and step-up transformer will be interconnected by isolated phase bus duct, tapped off for connections to auxiliary transformers (only on GTG1 and GTG2), to two sets each of three potential transformers and to surge protection cubicles.

The generator step-up transformers will be of outdoor oil-filled type located adjacent to the new GT generator units. These transformers will step-up the generator voltage of 14.8 kV to the 230 kV system voltage. The interconnection of these transformers to switchyard is described above.

Each unit auxiliary transformer will be an outdoor oil filled type sized to accommodate the auxiliary loads during operation of three GTG units. Each transformer will deliver the power received at the generator voltage level to a medium voltage level bus rated 6.9 kV. The bus will supply the power to the excitation system, 416 MCCs and other auxiliary loads as required.

Location of the auxiliary transformers will be as shown on the general arrangement drawing.

Generator breakers rated 13.8 kV, 9000A will be installed on the line side of each generator.

All microprocessor type relaying and instruments associated with the generator operation will be located on a separate protective relay panel. Protective relaying provided for each generator will include:

- Three phase generator differential
- Three phase overall differential
- Phase overcurrent (inverse time and instantaneous)
- Reverse power
- Loss of excitation
- Negative sequence
- Overvoltage
- Distance relay
- Over frequency

- Under frequency (3 relays with two out of three logic)
- Overexcitation (volt/hertz)
- Stator ground fault (90-95%)
- Stator ground fault (100%)
- Rotor ground fault
- P.T. blown bus protection (voltage balance relay)

Additionally, a system for both manual and automatic synchronizing will be provided for synchronizing across the generator circuit breaker. Metering which will be provided as part of the generator packaged system will include a wattmeter, varmeter, ammeter, and watthour integrator with signals to the new plant distributed control system. Voltage and current metering and alarm will be included with the generator excitation system.

The generator step-up transformer will be provided with three phase differential protective relaying, whose zones of protection will be overlapped by the overall unit differential relays. In addition, both the step-up and auxiliary transformers will be provided with sudden pressure relays to help isolate the transformer in the event of an internal fault. The step-up transformer will have ground fault protection in its grounded neutral. The auxiliary transformer will have primary phase overcurrent protection which will be coordinated with the medium or low voltage switchgear protection.

Revenue and backup meters will be provided.

For overall one-line diagram, refer to Exhibit 5-4, Sheets 1 and 2.

An electrical motor startup system will be furnished utilizing the generator as a startup motor for the combustion turbine unit. The startup system will be electrical motor startup package relocated from Nong Chok to North Bangkok Plant. The electric motor starting package will be a self-contained assembly within the same enclosure. The package will contain an electric motor with torque converter for initial rotation of the CTG and to accelerate to self-sustaining speed, and disconnect clutches to allow disengagement of the startup equipment once3 the unit reaches self-sustaining speed. During cool down periods, a turning gear will provide for a slow roll of the turbine generator.

When "start" is initiated from the turbine control system, the rotor will be accelerated to ignition speed by the starting motor. When ignition speed is reached, fuel is admitted to the combustors at the same instant that the ignitors begin to fire. After ignition is established, the acceleration to idle speed will proceed at the desired rate. After ignition, the starting equipment will continue to assist acceleration to about 64% of turbine rated speed; the control system will de-energize it automatically.

As the rotor approaches synchronous speed, the generator field breaker will be closed and the bleed valves are closed. The unit will then be ready for synchronization.

5.1.3 Instrumentation and Controls

5.1.3.1 General

The proposed repowering at North Bangkok will result in the addition of three combustion turbines and three HRSGs, with the continued utilization of the existing steam turbines. There are also additional equipment modifications that are discussed below.

The overall instrumentation and controls approach to support this repowering is to provide a new centralized control system for the overall monitoring and control of the plant. This would include a new control room from where all three units would be operated and a new distributed control system (DCS) that would integrate the operation of all the units. The proposed alternative would use existing combustion turbines from the Nong Chok Combustion Turbine Plant. The control of these combustion turbines would be integrated into the new DCS control system. The existing steam turbines would be provided with a new DEH control system that would also be integrated into the new DCS. Existing BOP plant instrumentation would be reused when suitable but redirected to the new DCS. New instrumentation would be provided in areas where there are new components, such as the new cooling tower, and connected to the DCS. Enhanced control schemes, such as improving the boiler feed pump controls, similar to that which was done at the South Bangkok Thermal Plant, would be incorporated into the new DCS for improved control, protection and performance. This will require the addition of some new instrumentation in the existing plant to take full advantage of the greater control capability of the new DCS.

5.1.3.2 Combustion Turbines

The proposed upgrade uses the existing combustion turbines from the Nong Chok facility. Based on information made available regarding these units, the following assumptions have been made that will need to be confirmed. It is conceived that the existing combustion turbines are complete with all required controls and instrumentation and in fairly good working order. Nong Chok/ Mitsubishi drawing N1-00873 depicts a layout of an electrical control building associated with a combustion turbine. This building is assumed to form a part of the equipment that will be relocated and that it contains the required electrical and control equipment associated with the operation of a combustion turbine. It contains local gas turbine controls and CRT panels, as well as unit DDC control panels (cubicles 1 to 7). These GT controls will be interfaced to the new DCS controls via a combination of data links and hard wiring for critical signals.

5.1.3.3 Heat Recovery Steam Generators

Three new HRSGs will be provided, complete will all required local instrumentation and controls that will interface with the overall plant DCS. Controls for the HRSG supplementary firing, probably a PLC, will also interface with the DCS via a data link. There will also be a continuous emission monitoring (CEM) system associated with each HRSG, potentially providing both a hard wired and data link interface to the DCS. In order to minimize wiring and to take advantage of the three identical HRSGs, a DCS I/O drop will be provided locally at each HRSG.

5.1.3.4 Steam Turbines

As noted in Section 2, the steam turbines have not been significantly modified nor upgraded from the original installation. Presently the turbines are controlled via a mechanical governor system. As part of the repowering a complete new turbine control system and actuators will be provided to support the proposed operating modes, extend turbine life, as well as to provide enhanced operation and protection. The proposed upgrade will add one electro-mechanical actuator to each servomotor and one to each throttle valve and add a new digital electro-hydraulic (DEH) control system. The new DEH could be a stand-alone control system that would interface to the plant DCS or be incorporated into the DCS. In a stand-alone system, the controls will be interfaced to the new DCS controls via a combination of data links and hard wiring of critical signals. Typically the new controls would incorporate features associated with:

- Automated and improved startup and loading
- Better speed and load control
- Capability for dispatching
- Improved protection functions
- Testing capability
- Automatic synchronization capability

One new DEH, be it a stand-alone or a part of the DCS, will be provided for each existing steam turbine and located in an area not to distant from each STG. The proposed location would be in the existing associated electronics room for each unit.

The DEH will also serve as an input point for any associated turbine related controls and monitoring. I/O would be provided for the existing lube oil system and the new control oil system, the generator H_2 seal oil system as well as any additional turbine generator monitoring points as described in Section 2.7.3.

In addition, since the turbines are operating in an extended life situation, turbine rotor stress monitoring components will also be provided.

5.1.3.5 Existing Plant Control System

All three units have been modified approximately five or six years ago, with the addition of a Westinghouse WDPF distributed control system (DCS) to control the existing steam generator units and boilers. The hardware is one of the earlier versions of this line and is no longer Westinghouse's primary line of DCS hardware.

Although it is possible to somewhat extend the life of the existing DCS with a major upgrade, it is not recommended. Rapidly diminishing support for the present system would result in a need to replace the existing WDPF system in the not too distant future. In addition, the existing controls will not remain in the same physical configuration, i.e. one control room for Units 1 and 2 and a separate control room for Unit 3. A new DCS control system is recommended, as described below, and will lend itself to the integration of the turbine controls as well as ability to have a coordinated system among the new equipment (CT and HRSG) as well as between units.

5.1.3.6 Other Existing Instrumentation and Control Systems

The existing plant instruments are a combination of upgraded electronic transmitters and elements and older pneumatic devices. Some of the instrumentation and controls associated with both BOP and other supporting equipment is acceptable but minimal in many cases. Additional monitoring and control points , including vibration monitoring on major rotating equipment, should be incorporated into the new DCS. This will allow for more system automation and protection, allowing the plant control system to provide monitoring, alarms, and associated component equipment control logic. It will also allow control of components from a centralized control room. Existing controls for the air compressors are acceptable and can be maintained with additional monitoring of some process parameters inputting the DCS. In order to minimize wiring, DCS I/O drops will be located in the existing plant electronic rooms to pick up the DCS input signals from these components.

The existing steam turbine vibration monitoring system is in good condition and can be reused but will be relocated to the new control room.

The intake structure contains the pumps and other equipment associated with the various auxiliary water systems. Except for the circulating water pumps, the overall method of control in this area is local manual. There is also very little monitoring or logic utilization of process parameters and therefore no automatic backup and switchover should a component trip or fail. There is no monitoring of bearing temperature or vibration on the large pumps/motors. It is recommended that the intake structure components, along with additional monitoring, be input and controlled from the DCS. I/O drops should be located there in order to minimize wiring.

The addition of a new cooling tower will require control that should be incorporated into the DCS again with remote I/O DCS drops at the tower in order to minimize wiring.

5.1.3.7 Proposed New Control System

A new Distributed Control System (DCS) is the recommended approach for the repowering. This control system should provide an integrated control system both on a unit basis (GTG, STG, HRSG) and a plant wide basis. It should be possible for the most part to startup, shut down and operate all three units from the DCS. Exhibit 5-5 depicts a block diagram of the proposed system.

This diagram represents the conceptual approach for the North Bangkok Station. The primary control concepts depicted include the following:

- A new central control room from which all three units can be operated.
- Sufficient operator interface CRTs and printers for operation, maintenance and record keeping.
- Hardwired critical trips.
- New steam turbine DEHs that interface to the DCS.
- Interfaces to each of the combustion turbine control systems.
- Additional DCS I/O drops for interfacing to the new HRSGs, the existing (and new) plant and intake structure instrumentation that will be used for the repowering, electrical inputs, and also for the new cooling tower.

It should be noted that the block diagram is only representative of the basic control concept. The specific design implementation may vary significantly based upon selected vendors, detailed information regarding the Nong Chok turbines, design specifics, etc. In addition, the system will require significant redundancy and partitioning to achieve the desired reliability and availability expected of a modern unit. The actual design may include separate DCS highways for each individual unit (plus common equipment) with gateways connecting the units together for overall coordination. Redundancy will also be required for the processing units, highways, selective interfaces, and operator interfaces such that continued operation will be possible should there be a failure of an important component.

The new control system will also be physically distributed in order to minimize the wiring runs. Exhibit 5-6 illustrates a potential layout of the new control system. As previously noted, it has been assumed that the existing Nong Chok units will be supplied with a control system/electrical equipment building and that this control system is capable, through a suitable gateway, of interfacing with the

overall plant DCS. This interface will potentially include the hardwiring of critical signals as well as data links for other signals.

For the DCS drops that interface with existing equipment in the plant, it is proposed that they be located in the existing plant electronic rooms. This is a location that a) may enable the reuse of some of the existing plant wiring, b) is centrally located for the wiring runs to most equipment and c) lends itself to a suitable environment after refurbishment of these rooms. Existing control and monitoring wiring, in general, runs to/from nearby HV and LV switchgear, to/from MCC's throughout the plant and to/from field devices (instruments, valves, etc.). New switchgear and some new instrumentation will be added as part of the repowering. The new DCS I/O drops would be the termination point for all the instrumentation and control wiring associated with these devices.

It is also proposed that the new turbine DEH control system be located in the existing electronics room. This equipment may be an integral part of the DCS or a stand-alone system with a DCS interface.

As with the existing plant, Unit 1 & 2 equipment would be in West (NW) electronics room and Unit 3 equipment in the East (SE) electronics room.

The control of the pumps located in the intake structure should be incorporated into the new DCS and as such an I/O drop would be located there to pick up the existing and new control and instrumentation monitoring points and minimize wiring runs. Likewise, new drops will also be located at the other remote locations to pick up I/O associated with the new cooling tower and electrical equipment associated with the combustion turbine generators.

For each of the new HRSGs there will be a DCS drop that will pick up the associated field devices and also interface with the HRSG supplied supplementary firing controls and CEM equipment.

All of the above will be controlled from a new central control room. It will be possible from this area to control all three units, including the existing steam turbines. For the most part, the units will be operated from the CRTs with a few critical hardwired indicators and trip push buttons. Exhibit 5-7 depicts the proposed layout of the new control room. The new DCS should also includes all necessary peripherals including programming equipment, printers, historic data storage and retrieval, and any other special equipment. Within the area there will be equipment associated with fire protection/detection, HVAC, vibration monitoring, load dispatching and an electrical panel for metering and synchronizing. There will also be additional space required for support services such as lockers, kitchens, meeting rooms, supervisory offices, etc.,

One final aspect that was considered was an assessment of the I/O requirements of the new DCS. Several existing combined cycle plants were reviewed as a

basis and normalized to a three-unit 1 x 1 configuration. Exhibit 5-8 presents the results of this evaluation. As can be seen, the basic I/O includes approximately 3600 points. This is a low-end base number and does not consider combustion turbine I/O, spares nor other unknown entities. In addition there will be a potential number of data links associated with the interfaces with the new DEHs, the HRSGs supplementary firing controls, HRSG CEMs, RTUs for load dispatching if required and the combustion turbines. It is expected that the final I/O quantities would be approximately 5000 hard points and 13 or more data links to other systems. (3 CEM, 3 HRSG, RTU, 3 GTGs, and 3 possible DEHs)

5.1.4 Water and Wastewater Treatment

5.1.4.1 Make-up Water Treatment

A. General

Significant variations in conductivity and chloride concentration of the Chao Phraya river near the North Bangkok Power Plant indicate that it is a tidal estuary at this location. It is essentially freshwater at some times and contains a large percentage of sea water at other times. Water analyses are presented in Appendix B. Not reported in the available data, but expected because the river is a tidal estuary, are significant variations in the level of suspended solids. The demineralized water treatment system described in this report is designed to treat water from the Chao Phraya river with these variations in quality. It is also designed to meet the Industrial Effluent Standards of Thailand.

The existing make-up water demineralizing plant has a nominal capacity of about 20 m^3/h and a maximum capacity of 28 m^3/h, which is only sufficient to provide the make-up needs of the heat recovery steam generators and some of the plant auxiliary water needs. The Mitsubishi MD701D combustion turbines will require injection of demineralized water into their combustors in order to bring NOx emissions in compliance with current regulations. The amount of injection water into the combustors of the three combustion turbines at the full load is about 100 m^3/h. It is, therefore, recommended to overhaul the equipment of the existing pretreatment and demineralizing plant and to build an additional pretreatment and demineralizing plant with a nominal capacity of about 100 m^3/h to provide the clean water needs of the repowered plant.

Selection of the water treatment process was based on several considerations. The available data indicate that the river varies from fresh water with low total dissolved solids to about a 2:1 mixture of fresh water and sea water with high total dissolved solids. Processes for treating the high TDS water are essentially reverse osmosis, electro-dialysis, and evaporation. Reverse osmosis was chosen, but the other two could also be used. Reverse osmosis presents the advantage of lower cost and that the reject effluent can be discharged into the waste water stream without further treatment.

After one stage of treatment through reverse osmosis (or electro-dialysis), river water with worst case total dissolved solids would become fresh water. This could be treated in an on-site regenerated ion exchange system with cation, anion, and mixed bed units. However, the discharge regulations indicate waste water TDS limits and these limits preclude on-site regeneration of an ion exchange system. For that reason, a second stage reverse osmosis system was chosen.

At times when the river is essentially fresh water, second stage reverse osmosis effluent would be suitable for injection into combustion turbines or for HRSG makeup. At times when the river TDS is high, second stage reverse osmosis effluent would have a few parts per million of TDS and would therefore need to be polished before being injected into combustion turbines or used for HRSG makeup.

Polishing of this small quantity of remaining TDS could be accomplished in a few different ways. One way would be to buy cation and anion exchange resins and throw these away when exhausted. A second way would be to have these ion exchange resins regenerated off-site if that type of service is available. A third way would be to install electrodeionization equipment. This would have a higher capital but a lower operating cost than the first two methods.

Exhibit 5-9 presents the overall schematic diagram of the proposed new water treatment plant. Exhibit 5-10, Sheets 1 and 2 (drawing M108) shows the flow diagram for the various components of the system.

B. Pretreatment

Sodium hypochlorite will be added to disinfect water from the Chao Phraya river and minimize biological growth in downstream equipment. Alum and polymer will be added to coagulate suspended solids and promote sedimentation in the clarifier. Gravity filters will remove additional suspended solids which are not removed in the clarifier. Gravity filter backwash will be recycled to the inlet of the clarifier.

Removal of suspended solids by coagulation, sedimentation, and filtration will reduce the silt density index to a level acceptable for the downstream reverse osmosis membranes.

C. Sludge Dewatering

Coagulated suspended solids removed by sedimentation in the clarifier will produce sludge with a solids content of approximately 2 – 4% (20,000 – 40,000 mg/l). This cannot be discharged to the river because the Industrial Effluent Standards of Thailand limit the suspended solids of wastewater discharged to 50 – 150 mg/l. Sludge will be therefore dewatered by means of a belt press. Water

removed from the sludge will be recycled to the inlet of the clarifier and dewatered sludge will be disposed off-site in a landfill. Dewatered sludge will have a solids content of 15 – 20%.

D. Reverse Osmosis

Pretreated river water will pass through three (3) 50% capacity stage 1 reverse osmosis cartridge filters to remove suspended solids which could cause fouling of downstream reverse osmosis membranes. Sulfuric acid and antiscalant will be added to prevent scaling on the reverse osmosis membranes and sodium bisulfite will be added to remove chlorine which could damage the membranes. Each of the three(3) reverse osmosis trains will be rated for 50% capacity.

When the river has a total dissolved solids of 200 – 2,000 mg/l, stage 1 reverse osmosis permeate will have a total dissolved solids of approximately 4 – 40 mg/l. The total dissolved solids of the stage 1 reverse osmosis reject discharged to the river will be limited to 3,000 mg/l in accordance with Industrial Effluent Standards of Thailand. When the river has a total dissolved solids of 2000 – 6000 mg/l, stage 1 reverse osmosis permeate will have a total dissolved solids of approximately 40 – 120 mg/l. The total dissolved solids of stage 1 reverse osmosis reject will be limited to a level of 5,000 mg/l above the Chao Phraya river in accordance with Industrial Effluent Standards of Thailand. At the highest reported Chao Phraya river total dissolved solids of 5,600 mg/l, the stage 1 reverse osmosis reject would then be approximately 10,600 mg/l; and the stage 1 reverse osmosis reject flow rate would be 674 gpm when the stage 1 permeate flow is 600 gpm.

When the stage 1 reverse osmosis permeate has a total dissolved solids of 4 – 40 mg/l, stage 2 reverse osmosis permeate will have a total dissolved solids of approximately 0.08 – 0.8 mg/l. When the stage 1 reverse osmosis permeate has a total dissolved solids of 40 – 120 mg/l stage 2 reverse osmosis permeate will have a total dissolved solids of approximately 0.8 – 2.4 mg/l. Inlet flow to stage 2 reverse osmosis is 600 gpm, permeate flow is 500 gpm, and reject flow is 100 gpm. The 100 gpm of stage 2 reverse osmosis reject will be recycled to the stage 1 reverse osmosis inlet.

E. Off-site Regenerated Ion Exchange or Electrodeionization

After two stages of reverse osmosis, the remaining total dissolved solids will sometimes be higher than the allowable limit of approximately 0.5 mg/l for injection into combustion turbines. The remaining total dissolved solids can be reduced to an acceptable level by off-site regenerated ion exchange or electrodeionization. Electrodeionization (EDI) removes ions from water using conventional ion exchange resins. An electrical current is used to force a continuous migration of contaminant ions out of the feed water, through the resin bed and into the reject stream. The current also splits water molecules into

hydrogen and hydroxyl ions, continuously regenerating the resin. EDI replaces the mixed bed in conventional water treatment systems, predictably and consistently producing water of the highest purity. The EDI process is continuous and therefore does not require system redundancy. In modular "stack-and-rack" arrangement, it can handle up to 2,000 gpm (450 m^3/h). Power consumption is 0.12 to 1.06 $kWh/m^3/h$, with nominal recovery rate of 90 to 95%. Off-site regenerated ion exchange produces no waste water. Electrodeionization separates inlet water into a pure product stream and a concentrated reject stream. The product stream will be within the allowable limits for injection into combustion turbines and the reject stream would be recycled to the stage 2 reverse osmosis inlet.

F. Equipment Description

Quantity	Description
1	clarifier approximately 44'-0" diameter by 20'-0" high designed for 1,175 gpm with concrete base and steel shell
3	gravity filters approximately 13'-0" diameter by 14'-0" high
1	clearwell approximately 18'-0" diameter by 14'-0" high
1	sodium hypochlorite storage tank approximately 9'-0" diameter by 15'-0" high and constructed of fiberglass reinforced plastic
2	sodium hypochlorite metering pumps
1	alum storage tank approximately 9'-0" diameter by 15'-0" high and constructed of fiberglass reinforced plastic
2	alum metering pumps
2	polymer storage tanks 6'-0" diameter by 12'-0" high constructed of high density polyethylene
4	polymer metering pumps
1	sodium bisulfite storage tank 6'-0" diameter by 12'-0" high constructed of high density polyethylene
2	sodium bisulfite metering pumps
1	antiscalant storage tank 6'-0" diameter by 12'-0" high constructed of high density polyethylene
1	sulfuric acid storage tank approximately 9'-0" diameter by 15'-0" high
2	sulfuric acid metering pumps
2	progressive cavity type sludge transfer pumps designed for 50 gpm
1	sludge tank approximately 18'-0" diameter by 20'-0" high with a conical base and motor driven mixer
2	progressive cavity type belt press feed pumps designed for 75 gpm
1	belt press with a one meter belt
2	backwash sump pumps rated for 100 gpm

3	stage 1 reverse osmosis feed pumps rated 640 gpm each
3	stage 1 reverse osmosis cartridge filters rated 640 gpm each
3	stage 1 reverse osmosis trains rated 640 gpm each
1	stage 1 reverse osmosis permeate tank approximately 12'-0" diameter by 16'-0" high
3	stage 2 reverse osmosis pumps rated 300 gpm each
3	stage 2 reverse osmosis trains rated 250 gpm each
3	electrodeionization trains rated 250 gpm each

As shown on Exhibit 5-11, the clarifier, gravity filters, sludge tank, clearwell, permeate tanks, and chemical storage tanks will be installed outdoors. The sodium hypochlorite, alum, and sulfuric acid storage tanks will be installed within concrete secondary containment areas to prevent a chemical spill in the event of a tank failure. Polymer, antiscalant, and sodium bisulfite storage tanks will be installed in a curbed area. The remainder of the equipment would be installed within a building approximately 65'-0" wide by 108'-0" long. Centrifugal and progressive cavity pumps will be installed in a pump room to minimize noise level in other areas of the building. Chemical feed equipment will be installed in a curbed area, and the belt press will be installed on a floor elevated approximately 14'-0" above grade level. The building includes an electrical room for a motor control center and a control room for a central control system.

5.2 Expected Performance and Heat Balances

In the repowered configuration the net plant electrical output at full load will be 560 MW without and 603 MW with supplementary firing in the HRSGs. The net plant heat rate (LHV) without and with supplementary firing will be 7,431 Btu/kWh and 7,493 Btu/kWh, respectively.

Exhibit 5-13 presents the heat balance data at full load with supplementary firing for Units 1 and 2. For Unit 3, the heat balance data is shown on Exhibit 5-14.

These heat balances are based on ambient air temperature of 90°F (32.2°C), 70% relative humidity and water injection at the rate of 1 kg of water for each kg of natural gas fired for NOx control.

Heat balances for the same ambient conditions without supplementary firing are presented on Exhibit 5-15 for Units 1 and 2 and on Exhibit 5-16 for Unit 3.

At 75% load supplementary firing will not be used. The heat balance data for Units 1 and 2 at this load is presented on Exhibit 5-17 and for Unit 3 on Exhibit 5-18.

5.3 Project Milestone Schedule

Exhibit 5–19 presents the Milestone Schedule for repowering the North Bangkok Power Station. This schedule is based on achieving the following milestones in the initial phase of the project.

- April 1, 2001 – EGAT approval of the feasibility study and decision to proceed with the repowering project.
- May 1, 2001 – EGAT awards a contract for inspection of the existing steam turbine-generators (including borescopic inspection and non-destructive examination).
- July 1, 2001 – EGAT awards a contract for environmental consulting services and Consultant begins to prepare environmental permit application documents.
- July 1, 2001 – EGAT awards Owner's Engineer contract and Owner's Engineer beings to prepare the EPC (engineer, procure, contract) tender documents.
- June 1, 2002 – Environmental permit is approved.

Achieving the above milestones will allow the engineering, design and preparation of tender documents to proceed. It is planned to issue the EPC tender documents as soon as the design, technical specifications and commercial documents have been finalized but not to award the EPC contract before the environmental permit has been received. Once the EPC Contract is awarded, EGAT and its Engineer will begin reviewing shop drawings and other documents from the EPC Contractor and its subcontractors. Top priority will be given to the review of submittals for the long lead equipment including the HRSG's and the 230kV GIS switchyard.

Site mobilization is planned for April 1, 2003 and the plant will need to be in the shut down mode at that time to allow the existing boilers to be demolished. Plant shutdown will be required until construction of the repowering project is completed and the new units are started up.

Mechanical completion of construction is planned for October 1, 2004. To allow startup operations to commence, the following milestones will need to be achieved by that time:

- Fuel Supply Contract in place
- Tie-in complete to new 230 kV substation
- Tie-in complete to new gas pipeline

- Training complete for plant O&M personnel

Startup operations will occur over three months and all three units are planned to be in operation on January 1, 2005. Performance testing will extend for another two months with project completion planned for March 1, 2005.

5.4 Recommended Equipment Disposition

The existing equipment and facilities that will be reused in repowering include the following:

- steam turbine generators and auxiliaries
- steam condensers with tube cleaning systems
- condenser air evacuation ejectors
- deaerators and storage tanks
- boiler feed pumps and drives
- intake structure with trash racks and rake
- circulating water pumps and motors
- traveling water screens
- screen wash pumps and piping system
- circulating water piping and valves
- chlorination system
- clarifier and ion exchange demineralizer plant
- demineralized water storage tank and pumps
- control and service air compressors
- fire pumps and fire protection loops
- service and cooling water piping valves
- gas turbine generators and auxiliaries (from Nong Chok)
- step-up transformers for GTGs (from Nong Chok)
- STG unit auxiliary electric transformers
- turbine hall
- turbine hall overhead bridge crane
- demineralizer building
- offices and shops
- STG switchgear and MCCs
- some of the condensate, boiler feed, cooling water, service water and compressed air piping, valves and accessories
- STG control room equipment, instruments and controls
- communication systems
- sanitary facilities
- batteries, battery charger and diesel generator
- turbine hall elevator

Equipment and systems that will be retired, dismantled, removed or left in place are:

- steam generators and auxiliaries
- forced draft, induced draft and gas recirculation fans
- stacks and ductwork
- steam generator structure with platforms, stairs, ladders

- fuel oil storage tanks and dikes
- fuel oil pumps, piping and accessories
- 69 kV switchyard
- STG main step-up transformers
- STG start-up transformers
- LP and HP feedwater heaters

New equipment and systems that will be procured and installed at the North Bangkok Station include:

- heat recovery steam generators (HRSG)
- condensate pumps and motors
- cooling water pumps and motors
- cooling tower
- auxiliary circulating water pumps and motors
- condensate storage tank
- 230 kV STG main step-up transformers
- 230 kV STG start-up transformer
- 230 kV GIS switchyard
- water treatment system (reverse osmosis and EDI with auxiliaries)
- main steam, hot reheat and feedwater piping
- turbine by-pass systems
- DCS

5.5 Maintenance Planning and Spare Parts Program

5.5.1. General

A maintenance and inspection program that optimizes EGAT's costs and maximizes equipment availabilities will be needed for the North Bangkok repowered station. Advance planning of maintenance activities will keep downtime, forced outages and start failures to a minimum.

In a combined cycle plant, maintenance planning focuses on combustion turbines, which are typically the most vulnerable items of equipment in the plant. Parts unique to the gas turbine requiring the most careful attention are those exposed to the combustion process and to high temperature flue gases from the combustion. These are so-called hot-gas-path (HTG) parts and include fuel nozzles, combustion liners, transition pieces, crossfire tubes and retainers, turbine nozzles, buckets and shrouds.

Each combustion turbine manufacturer has its own recommendations on inspection and maintenance intervals, procedures, and parts inventory to be maintained. The following outline of maintenance procedures is generic and typical of most major manufacturers of combustion turbines operated in conjunction with combined cycles in a base load mode of operation.

5.5.2 Planned Maintenance

Planned maintenance outages are advance scheduled to perform routine, manufacturer recommended inspection and maintenance of combustion turbines, steam turbines and balance of plant.

PLANNED MAINTENANCE			
Fired Hours	8,000	24,000	48,000
GTG	Combustion Inspection	Hot Gas Path Inspection	Major Inspection
STG & BOP	Minor Inspection	—	Major Inspection
Outage Duration - Hrs	140	360	720
- Days	6	15	30

5.5.2.1 Combustion Inspection

Typically, the combustion inspection is performed every 8,000 hours of fired operation and is scheduled to be completed during a 140 hours shutdown.

The combustion inspection is a relatively short disassembly shutdown inspection of fuel nozzles, liners, transition pieces, crossfire tubes and retainers, spark plug

assemblies, flame detectors and combustor flow sleeves. This inspection concentrates on the combustion liners, transition pieces and fuel nozzles, which are recognized as being the first to require replacement and repair in a good maintenance program. Proper inspection, maintenance and repair of these items will contribute to a longer life of the downstream parts, such as turbine nozzles and buckets.

The combustion liners, transition pieces and fuel nozzles should be removed and replaced with new or repaired components to minimize downtime. The removed liners, transition pieces and fuel nozzles can then be cleaned and repaired after the unit is returned to operation and be available for the next combustion inspection interval. Typical combustion inspection disassembly and reassembly requirements are:

A. Disassembly

- Remove turbine compartment roof and side panels and accessories attached to same.
- Remove gas fuel lines.
- Remove fuel nozzle assembly.
- Unbolt and remove combustion end caps.
- Remove crossfire tube retainers, combustion liners, crossfire tubes and flow sleeves.
- Remove transition pieces.
- Remove inlet plenum access panel.

B. Inspection

- Visually inspect all removed combustion hardware.
- Inspect inlet guide vanes and bushings.
- Wirebrush and hone all horizontal and vertical joints.
- Visually inspect all fuel gas, water and hydraulic piping before reinstalling.
- Measure and record thrust clearance.
- Visually inspect leading face of first stage turbine nozzle.
- Visually inspect compressor exit section.
- Conduct borescope inspections on accessible turbine and compressor stages.

C. Reassembly

- Install transition pieces from inventory.

- Install crossfire tubes and retainers, combustion liners, and flow sleeves from inventory.
- Install combustion end caps from inventory.
- Install fuel nozzle assemblies from inventory.
- Install fuel gas lines.
- Install turbine compartment roof, side panels, and accessories that are attached thereto.

Minor steam turbine annual maintenance which consist of rotor borescopes, steam throttle and control valve maintenance and lube oil conditioning maintenance is expected to require 3 to 5 days and occurs concurrently with gas turbine combustion inspection.

5.5.2.2 Hot-Gas-Path Inspection

Typically, the hot-gas-path inspection is performed every 24,000 fired hours and is scheduled for a 360 hours outage (15 days).

The purpose of a hot-gas-path inspection is to examine those parts exposed to high temperatures from the hot gases discharged from the combustion process. The hot-gas-path inspection includes the full scope of the combustion inspection and, in addition, a detailed inspection of the turbine nozzles, stationary stator shrouds and turbine buckets. To perform this inspection, the top half of the turbine shell must be removed.

For inspection of the hot-gas-path all combustion transition pieces and the first-stage turbine nozzle assembly must be removed. Removal of the second and third stage turbine nozzle segment assemblies is optional, depending upon visual observations and clearance measurement. The buckets can usually be inspected in place. Also, it is usually worthwhile to fluorescent penetrant inspect (FPI) the bucket vane sections to detect any cracks. In addition, a complete set of internal turbine radial and axial clearances (opening and closing) must be taken during any hot-gas-path inspection. Typical hot-gas-path inspection requirements are:

A. Disassembly

- Remove turbine compartment roof and side panels.
- Remove gas fuel lines.
- Remove fuel nozzles.
- Remove cooling and sealing air lines.
- Unbolt and open up combustion casing covers.

- Remove crossfire tube retainers, combustion liners, crossfire tubes and flow sleeves.
- Remove combustion casings.
- Remove transition pieces.
- Place mechanical jacks under the turbine casing.
- Remove turbine casing bolts.
- Remove upper half turbine casing.
- Remove upper and lower halves of the first stage nozzle.
- Remove first stage buckets.
- Remove inlet plenum access panel.

B. Inspection

- Visually inspect all removed combustion hardware.
- Measure and record initial turbine clearances, rotor thrust, and 2nd and 3rd stage nozzle deflection.
- Measure and record first stage nozzle concentricity and ellipticity.
- Visually inspect first stage nozzle.
- Visually inspect the second and third stage nozzles in place.
- Visually inspect first, second and third stage turbine buckets.
- Clean and visually inspect upper and lower half casings for pitting, corrosion and erosion.
- Wirebrush and hone all horizontal and vertical joints.
- Visually inspect all fuel gas, water and hydraulic piping before reinstalling.
- Perform borescope inspection on compressor where accessible.

C. Reassembly

- Install first stage turbine buckets from inventory.
- Install the lower half of the first stage nozzle from inventory.
- Install the upper half of the first stage nozzle from inventory.
- Install upper half turbine casing.
- Remove mechanical jacks from under the turbine casing.
- Install transition pieces from inventory.
- Install crossfire tubes and retainers, combustion liners, and flow sleeves from inventory.

- Install combustion casing end caps from inventory.
- Install cooling and sealing air lines.
- Install fuel nozzle assemblies from inventory.
- Install fuel gas lines.
- Install turbine compartment roof and side panels.

5.5.2.3 Major Inspection

Major overhaul inspections of combustion turbines are performed every 48,000 hours of fired operation and may require a shutdown of 720 hours (30 days). During the same shutdown period, major steam turbine inspection and overhaul may also be planned.

The purpose of the major inspection is to examine all of the internal rotating and stationary components from the inlet of the combustion turbine through the exhaust section of the machine. A major inspection should be scheduled in accordance with the recommendations in the owner's Maintenance and Instructions Manual or as modified by the results of previous borescope and hot-gas-path inspection. The work scope involves inspection of all the major flange-to-flange components of the gas turbine which are subject to wear during normal turbine operation. This inspection includes previous elements of the combustion and hot-gas-path inspections, in addition to laying open the complete flange-to-flange gas turbine to the horizontal joints to allow inspections to be performed on internal items. Depending on the coating condition, first-stage bucket replacement may be necessary at the major inspection.

A. Disassembly

- Separate load coupling for alignment check. Perform alignment checks.
- Remove turbine compartment roof and side panels.
- Remove gas fuel lines and fuel nozzles assemblies.
- Remove cooling and sealing air lines.
- Unbolt and open up combustion casing end caps.
- Remove crossfire tube retainers, combustion liners, crossfire tubes and flow sleeves.
- Remove combustion casings and transition pieces.
- Place mechanical jacks under the turbine casing.
- Remove turbine casing bolts and upper half turbine casing.
- Unbolt and remove upper half inlet plenum.
- Unbolt and remove upper half exhaust frames.

- Unbolt and remove inlet, compressor and compressor discharge casings.
- Remove upper and lower halves of the first stage nozzle, second stage nozzle and third stage nozzle.
- Remove the upper half inner compressor discharge casing.
- Disassemble the upper half number one and two bearing housings, Disassemble thrust bearing.
- Remove the gas turbine rotor.
- Remove all turbine buckets.

B. Inspection

- Inspect load coupling.
- Visually inspect all removed combustion hardware.
- Measure and record initial turbine clearances, rotor thrust and second and third stage nozzle deflection.
- Visually inspect first, second and third stage nozzles.
- Visually inspect first, second and third stage turbine buckets and compressor rotor and stator blading.
- Measure and record compressor clearances.
- Inspect number one and number two bearings and their associated oil deflectors.
- Visually inspect the hot gas path.
- Inspect inlet guide vanes and bushings.
- Clean and visually inspect upper and lower half casings for pitting, corrosion and erosion.
- Wirebrush and hone all horizontal and vertical joints.
- Visually inspect all fuel gas, water and hydraulic piping before reinstalling.
- Measure and record thrust clearance, assembly compressor clearances, and assembly turbine clearances.
- Measure and record final alignment readings.

C. Reassembly

Lower Half

- Install the lower half #1 and #2 gas turbine bearings.
- Install 1st and 2nd and 3rd stage turbine buckets from inventory.

- Install gas turbine rotor.
- Assemble the #1 and #2 gas turbine bearings.
- Assemble thrust bearing.
- Install the lower halves of the first, second and third stage nozzles from inventory.

Upper Half

- Install the upper halves of the first, second and third stage nozzles from inventory.
- Install the upper half inner compressor discharge casing.
- Install inlet, compressor, and compressor discharge casing.
- Install upper half exhaust frame.
- Install upper half inlet plenum.
- Install upper half turbine casing.
- Remove mechanical jacks from under the compressor and turbine casings.
- Install inlet and exhaust plenum access panels.
- Install transition pieces from inventory.
- Install outer combustion casings and aft flow sleeves.
- Install crossfire tubes and retainers, combustion liners, and forward flow sleeves from inventory.
- Install cooling and sealing air lines.
- Install fuel nozzle assemblies from inventory.
- Install fuel gas lines.
- Install turbine compartment roof and side panels and accessories associated with same.
- Check alignment of load coupling.

5.5.2.4 Compressor Washes

Generally, the major cause of loss in gas turbine output and efficiency is caused by compressor blade fouling attributable to dirt, oil, vapor, smoke and other impurities in the air the combustion turbine ingests. Most of the losses are recoverable by washing compressor blades. Site conditions and operating economics will dictate the frequency of the off-line washes. The Nong Chok combustion turbines are equipped with on-line compressor washing system which should be used every other day or so. In addition off-line washes every 30 to 60 days are recommended. Accordingly, 6 to 12 off-line washes annually, each requiring a shutdown of 12 hours, should be planned.

5.5.3 Spare and Replacement Parts

Long term major parts planning schedule is a necessary tool for use in maintaining parts for combustion, hot-gas-path and major inspections as well as capital and operational spares. Lack of adequate on-site spares prior to a scheduled inspection can have a major adverse effect on outage duration.

The overall planned maintenance philosophy of gas turbines is to remove from the GT major components subjected to wear and tear during planned inspections and install similar components from inventory. This Inspect, Replace and Repair philosophy is applied to most vulnerable components such as liners, nozzles, buckets, shrouds, and transition pieces.

A typical inventory of spares is shown on Exhibit 5-11.

5.5.4 Maintenance Tools and Equipment

Tools and equipment necessary for maintenance of combustion turbines are not significantly different than those needed for routine maintenance of other power plant equipment.

Specialized tools specifically required for the selected turbine make and model must be purchased from the turbine manufacturer. These tools typically will include:

Alignment Fixtures
Assembly Fixtures
Guide Pins
Lifting Brackets
Any other tools specifically required for the purchased gas turbine

Other tools needed at the plant may typically include:

Impact Adapters
Tube Benders
Drill Bit Sets
Impact Extension Drives
Feeder Gauges
File Sets
Hacksaw Blades
Hammers
Helicoil Thread Repair Kits
Micrometer Sets
Plier Sets
Pry Bars
Puller Collets

Screwdrivers
Socket Sets
Torquometers
Wrench Sets
Etc.

5.6 Training

5.6.1 Training Needs

The present EGAT staff at the North Bangkok Station will continue to manage, operate and maintain the repowered plant. To the extent that the new facilities differ from the existing steam units, some training may be needed. Such training will address the following new aspects of the repowered facility:

- Overall concept of combined cycles
- Gas Turbines
- Heat Recovery Steam Generators (HRSGs)

5.6.2 Program Organization

The contractor in conjunction with the combustion turbine manufacturer will conduct and coordinate a mutually agreed upon training program for EGAT's personnel to allow them to operate and maintain the facility in a safe and efficient manner. Specific training is to be provided in startup, operation, shutdown and maintenance of equipment actually installed at the facility. EGAT will designate the personnel to be trained and will approve all aspects of the program.

5.6.3. Training Program

The program will be split into three phases and will consist of theoretical classroom training and on the job training in all relevant areas required for gas fired combined cycle units.

Phase 1 will be an introduction classroom course of four weeks. This course will be conducted at the North Bangkok Station and will serve to familiarize the trainees in basic knowledge of combined cycles, combustion turbines and HRSGs. The trainees will also get acquainted with operating and maintenance features of specific equipment and systems provided at this facility. The training classes will be conducted by experienced instructors on equipment identical to the systems supplied, using training materials prepared by contractor specifically for the facility being constructed.

Phase 2 will be a seven months on-the-job training in one of EGAT's combined cycle power plants. During this phase the trainees will be made familiar with all aspects of operation and maintenance of combined cycle plants. Each trainee will be assigned specific training activities commensurate with his future responsibilities at the repowered facility.

Phase 3 will start one month before to commissioning of the repowered plant and will continue until the plant is in commercial operation. The trainees will get on-

the-job training by assisting the commissioning/start-up engineers in the start-up and commissioning of equipment and systems. Once equipment has been commissioned, the trainees will operate the plant at first under contractor's supervision followed by EGAT monitored operation. A comprehensive training manual prepared specifically for equipment and systems supplied will be provided to each trainee.

5.7 Recommendations for Plant Lay-Up

5.7.1 General

The short-term lay-up of power plants is normal industry practice as it is required to accommodate major maintenance and periods of time when the generating units are in extended cold standby status. Most utilities have developed operation and maintenance practices which are suitable for these short-term lay-ups which may last up to several months.

For the long-term lay-up of power plants which may last several years, corrosion and biological damage (mold, mildew, etc.) are primary concerns and additional measures are required to minimize the deterioration of equipment. Such measures are discussed below.

5.7.2 External Surfaces

Paints and preservative coatings can be used to protect many external surfaces. Where insulation and lagging have been installed on equipment, it must be maintained in a weather tight condition.

5.7.3 Internal Surfaces

A. Steam and Feedwater Cycle Equipment

For steam and feedwater cycle equipment such as boilers and feedwater heaters, wet lay-up can be used to provide an air-tight condition. This method requires that the equipment be filled with demineralized water with a corrosion inhibitor such as ammonia. This also applies to piping associated with the equipment that can be completely filled. Nitrogen gas also needs to be added to protect the equipment spaces where water cannot reach, e.g. top of boiler steam drums and top of feedwater heaters.

Wet lay-up is considered by many to be the best preservation method. However, it requires a substantial operation and maintenance effort for the duration of the lay-up. The nitrogen blanket must be maintained, treated make-up water must be added to offset leakage, and the lay-up water must be regularly monitored by performing chemical analysis.

B. Other Major Equipment

For major equipment where wet lay-up is not practical, e.g. turbines, generators, exciters, condensers, furnace air and gas side, etc., dry lay-up can be used. Dry lay-up has been accomplished using either nitrogen gas or dehumidified air. However, nitrogen lay-up is often more difficult to maintain. Dehumidified air lay-up has been found to be less costly to maintain and allows the equipment to be readily opened periodically for inspections.

In dehumidified air lay-up, the ambient air is drawn from the equipment spaces, dehumidified, and returned to the equipment spaces. Closed-loop recirculation is provided so that, within the loop, the air can be maintained in a relatively dry condition. It has been found that maintaining the air in the equipment spaces at a relative humidity of less than 30% should be sufficient to protect the equipment. Either refrigeration equipment or desiccant dehumidifiers can be used to dry the air.

In addition to dehumidified air lay-up, the turbine-generator would, of course need to be operated regularly on its turning gear in accordance with the manufacturer's instructions.

C. Auxiliary Systems

A number of auxiliary systems can be left in service and regularly operated, e.g. turbine lube oil, water treatment, compressed air systems, auxiliary electrical systems, etc.

5.7.4 Dehumidifiers

To illustrate such a system, a dehumidification system that uses silica gel desiccant in a rotating wheel dehumidifier is described hereinafter. The purpose of the dehumidifiers is to halt corrosion by keeping all parts of the unit dry – below 30% relative humidity. At this level of dryness, steel will not rust nor will mold nor mildew grow. Equipment kept this dry will last for an indefinite period. A typical term lay-up dehumidification schematic is shown in Exhibit 5-21.

A. Dehumidifier Operation

The system operates by circulating air in a closed loop. The dehumidifier blowers push dry air into each loop. As the air progresses, it picks up moisture in its path. The wet air is pulled back into the machine and through the desiccant bed. The desiccant absorbs the moisture out of the air leaving it dry to return back into the equipment.

The desiccant we are using is a silica gel matrix in a big slowly rotating wheel. As the wheel passes through the regenerating section, it is hit by a stream of hot air. (As air is warmed it holds more and more moisture. Fully saturated (wet) air at 40°F is only 11% saturated at 100°F). The hot air dries out the desiccant so that it is available to dry the circulating air again. There is no water to remove.

Not every piece of equipment can be in the path of the air flow. However, the amount (partial pressure) of each gas quickly averages out through each system. This means that if wet air borders dry air, the humidity in both will quickly be the same. By keeping the dehumidifiers running, we will be able to extract moisture from the farthest parts of each system and keep them dry.

The dehumidifiers are designed for automatic operation with the heat limited to dry out but not overheat the desiccant wheel. The manufacturer's manual gives detailed operating and maintenance instructions.

B. Loop Descriptions

The smallest dehumidifier and simplest loop is the 600 CFM machine for the generator. There are neither exterior valves nor controls. Dry air blows in one end of the generator and wet air is pulled out of the other. The relative humidity and pressure gauges show that the machine is working properly. Both R/H gauges should read the same within days.

Both machines by the ash hopper work together to dry out the air/gas path in the boiler and ductwork. The simpler path is the one dried by the smaller, 4500 CFM, machine "C". It blows dry air into the windbox. The air goes up the boiler, into the warm air ducts, through the air side of the air preheaters and down into the forced draft fans. From there it is pulled back into the dehumidifier. The relative humidity will be sampled by opening the sight glasses at the burner fronts and the capped probes at the air preheater. The FD fan dampers will be left open.

The large, 9000 CFM machine "D" dries the gas path from below the air heaters, through the entire boiler, and out the ash hoppers. The breeching is blocked off near the stack. Both breeching and the gas recirculation systems dry by partial pressures. Sampling can be done by opening boiler doors at various elevations. It is important to close doors and sight glasses when not in use to keep the system efficient.

The most complex gas path is that of the wet side, that is the condenser, piping, boiler tubes and drums. This is dried by 4500 CFM machine "A". The gas flow goes into the system at the condensate pump suction header and follows the steam/water flow, but in a reversible direction. All the air goes into the condenser and the low pressure turbine. As much as possible should go up into the reheat section of the boiler through the hot reheat line. From there it goes back down into the turbine and back up the main steam line to return to the boiler.

Two paths exist to exit the boiler. One is out the economizer, through the water side of the heat exchangers, through the boiler feed pumps and back through the condensate pump discharge into the dehumidifier. The other path is from the steam drum down the water wall tubing into the drain header, from where it returns to the dehumidifier.

A third path has been added from the high pressure blow down tank. This system is designed so that at the beginning of the drying cycle the tank's drain into the condenser can be left open. Once the condenser is dry that valve can be closed. As the reheat section dries out those valves can be closed also.

For this system to work, the gas paths must be open and every section not on the gas path must be valved open so that each and every piece of pipe and equipment can be exposed to the dry air. Every valve in the system except the condensate pump discharge valves, which separate supply from suction must be open. This includes all control vavles. Steam traps must be open and heir bypasses open. The only closed valves in the system are the vents and drains and they all must be kept closed.

C. Operation

Relative humidity probes have been purchased for checking the efficiency of the operation. They will provide us with the information necessary to make decisions.

For the 600 CFM machine "B" on the generator, the only required operation is to turn on the machine. Likewise, there are no ways to control the flow on air/gas path machines C and D. (Should samples show significant differences between the sides of the boiler or air heaters, we may have to add some). The only machine with controllable gas paths is wet-side machine "A".

Each of the three (3) air paths on machine "A" can be throttled by valves on the dehumidifier inlet. Initially, they should be wide open. As sampling shows that some areas dry out and others do not, valves can be pinched to force more air through the wet areas. This especially holds true for the flow path from the blow down tank. here we can close all the tank's inlet valves except for the area we want to consider and monitor the relative humidity of that area. The condenser would be the first. Once it is dried out, we can close the drain line to the condenser. The hot reheat followed by the cold reheat would be next. The main steam, steam leads and steam valves will probably remain open all the time.

The auxiliary steam cross ties must be valved out. The 250 # auxiliary steam valve is above the control room. Also close the bypass valve. The 150 # valve is in unit #1 north of the deaerator. Also close the bypass valve. The 2" valve from the unit heating heat exchangers to the condenser must also be closed It may be necessary to drain some of this condensate to keep the heat on as there may not be enough pressure to return all of the condensate to Unit 1.

The steam side of the feedwater heaters are off the direct flow path although open to each other, the turbine and the condenser. if sampling shows they are drying out, all valves will be left open. If not, we will work through a sequence of opening and closing valves until we achieve our result.

5.7.5 Summary

If the long-term lay-up of the North Bangkok Power Plant is anticipated, it is recommended that EGAT obtain specific long-term lay-up procedures from the

original equipment manufacturers. By integrating those recommendations and the general guidelines in this letter, a long-term layout program can be developed.

If the repowering project proceeds, some of the existing major equipment, e.g. boilers and feedwater heaters, will not be reused, as discussed in Section 2 of this report. Therefore, this equipment may not need to be preserved.

EGAT, as a member of EPRI, may also want to obtain for additional information EPRI Report CS-5112, Guidelines: Long-Term Lay-up of Fossil Plants, dated April 1987.

EXHIBITS

SECTION 5

5-1	Schematic Diagram of Selected Repowering Options
5-2	General Arrangement
5-3	Not Used
5-4	Key One Line Diagram
5-5	Block Diagram Controls & Instruments
5-6	Control System Arrangement
5-7	Layout of Control Room
5-8	I/O Estimate
5-9	Flow Diagram of New Water Treatment System
5-10	P & I Diagram Demineralized Water Treatment System
5-11	P & I Diagram Demineralized Water Treatment System
5-12	Arrangement of New Water Treatment Plant
5-13	Heat Balance Data Units 1 & 2 – Duct Firing 100% Load
5-14	Heat Balance Data Unit 3 – Duct Firing 100% Load
5-15	Heat Balance Data Unit 1 & 2 – Unfired 100% Load
5-16	Heat Balance Data Unit 3 – Unfired 100% Load
5-17	Heat Balance Data Unit 1 & 2 – Unfired 75% Load
5-18	Heat Balance Data Unit 3 – Unfired 75% Load
5-19	Milestone Schedule
5-20	Recommended Spare Parts Inventory
5-21	Operational Schematic of Dehumidification System

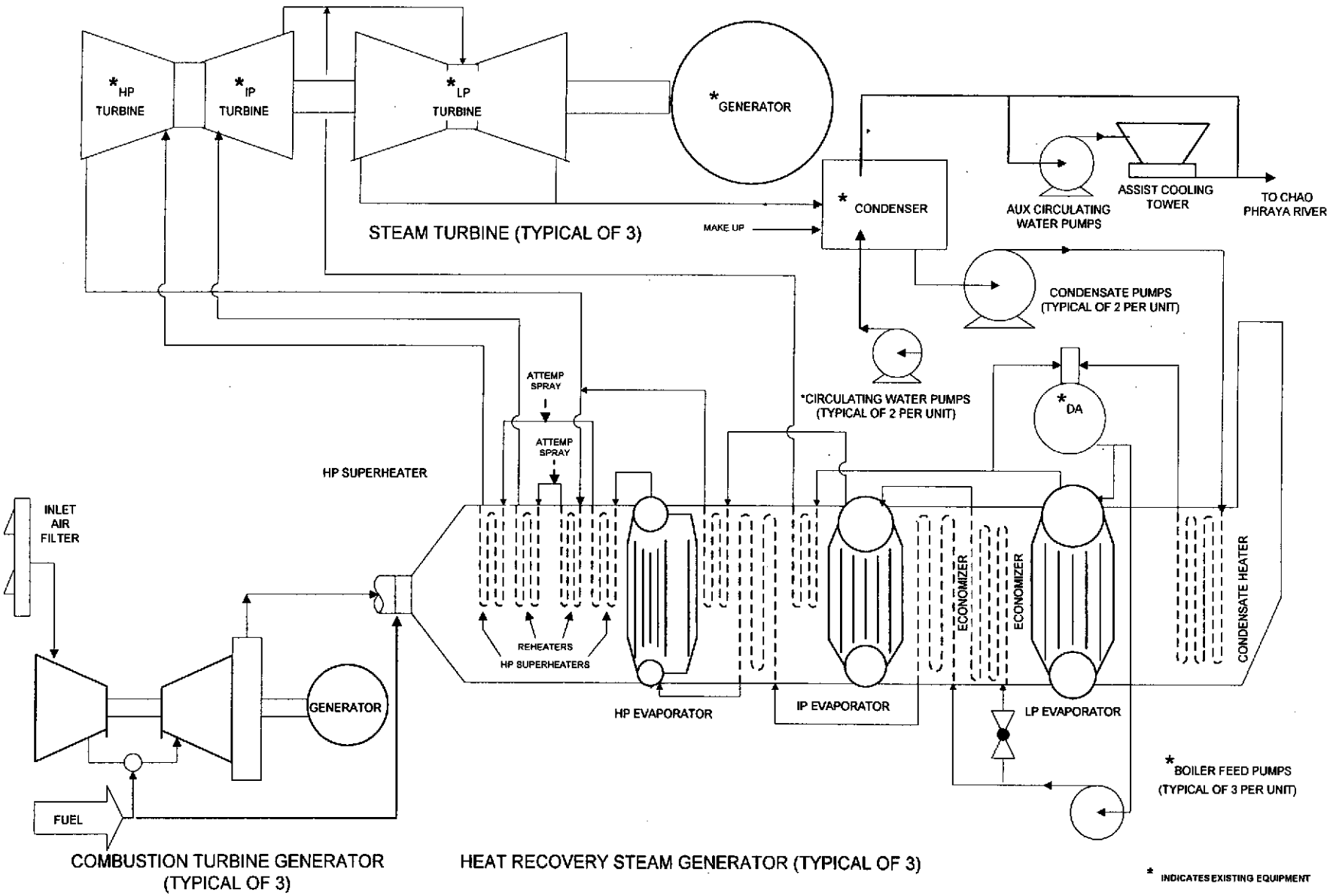

Exhibit 5 - 1
SCHEMATIC DIAGRAM OF SELECTED OPTION FOR REPOWERING NORTH BANGKOK

Exhibit 4-4
ECONOMIC SUMMARY OF RETROFIT OPTIONS

Description	REPOWERING ARRANGEMENT				
Case	A	A	B	B	C
Gas Turbine Generators					
- Manufacturer	GE	Siemens	Siemens	Mitsubishi	GE
- Model	PG9351FA	V94.3A	V94.2 V94.2A	MW701D	PG6101FA
- Quantity	2	2	2 1	3	6
Design Net Plant Output - kW	680,496	634,590	668,039	602,928	591,780
Capital Cost Estimates					
Base Capital Cost - $1000	260,700	257,300	263,900	160,000	315,800
Capital Cost Base Year	Jul-00	Jul-00	Jul-00	Jul-00	Jul-00
Construction Start	Apr-03	Apr-03	Apr-03	Apr-03	Apr-03
Escalation - $1000	39,874	39,354	40,363	24,472	48,301
IDC - $1000	26,238	25,895	26,560	16,103	31,783
Total Capital Cost - $1000	326,811	322,549	330,823	200,575	395,884
Commercial Operation	Jan-05	Jan-05	Jan-05	Jan-05	Jan-05
Unit Cost at COD - $/kW	480	508	495	333	669
Annual Costs - $1000/yr					
Capital Charges	46,425	45,819	46,995	28,492	56,237
Fuel Costs	113,151	106,878	116,997	114,498	103,496
O&M	27,145	25,968	26,857	24,915	25,334
Total	186,721	178,666	190,849	167,906	185,068
Generation Costs - $/kWh					
First Year					
Capital Charges	0.0097	0.0103	0.0100	0.0067	0.0136
Fuel Costs	0.0237	0.0240	0.0250	0.0271	0.0250
O&M	0.0057	0.0058	0.0057	0.0059	0.0061
Total	0.0392	0.0402	0.0408	0.0397	0.0446
Levelized					
Capital Charges	0.0087	0.0092	0.0090	0.0060	0.0121
Fuel Costs	0.0269	0.0272	0.0283	0.0307	0.0283
O&M	0.0072	0.0074	0.0073	0.0075	0.0077
Total	0.0428	0.0439	0.0446	0.0443	0.0481

EXHIBIT 4-5
PERFORMANCE SUMMARY OF RETROFIT OPTIONS

Description	ARRANGEMENT					
	A	A	B		B	C
Gas Turbine Generators						
- Manufacturer	GE	Siemens	Siemens		Mitsubishi	GE
- Model	PG9351FA	V94.3A	V94.2	V94.2A	MW701D	PG6101FA
- Quantity	2	2	2	1	3	6
- Unit Output - kW	229,956	208,214	141,291	168,304	129,360	62,001
- Unit Heat Rate - Btu/kWh LHV	9,643	9,581	10,335	9,894	10,785	10,548
- Total Output - kW	459,912	416,428	282,582	168,304	388,080	372,003
Steam Turbine Generators						
Output Unfired - kW						
- Unit 1	75,469	65,604	73,447	—	65,668	72,251
- Unit 2	75,469	65,604	73,447	—	65,668	72,251
- Unit 3	90,692	78,133	—	90,920	67,891	74,806
- Total	241,630	209,340	237,814		199,227	219,308
Output Fired - kW						
- Unit 1	NA	74,526	NA		75,002	74,989
- Unit 2	NA	74,526	NA		75,002	74,989
- Unit 3	NA	88,736	NA		88,092	88,102
- Total	NA	237,788	NA		238,096	238,080
Combined Cycle Plant						
No Duct Firing						
- Gross Output - kW	701,542	625,768	688,700		587,307	591,311
- Auxiliary Loads - kW	21,046	18,773	20,661		17,620	17,740
- Net Output - kW	680,496	606,995	668,039		569,687	573,571
- Net Heat Rate - Btu/kWh LHV	6,517	6,573	6,864		7,347	6,841
Full Duct Firing						
- Gross Output - kW	NA	654,216	NA		626,176	610,083
- Auxiliary Loads - kW	NA	19,626	NA		18,786	18,303
- Net Output - kW	NA	634,590	NA		607,390	591,780
- Supplementary Fuel - MBtuh	NA	270.8	NA		317.0	164.9
- Net Heat Rate - Btu/kWh LHV	NA	6,714	NA		7,413	6,909

Note: Performance is based on 90°F (32.2°C) ambient, 70% relative humidity and assumes that all gas turbines operate with evaporative coolers

Heat Balance - Arrangement A

2-PG9351FA Gas Turbines Without Duct Firing

North Bangkok Thermal Plant
Case: 90 deg F, 70% RH, Unfired

PLANT DESCRIPTION	
Gas Turbines	PG9351FA
Number of GT/WHB Units	2
NOx Control	Dry Low
Steam Turbine	Reheat
Number of Steam Turbines	3

ELECTRIC SUMMARY - kW	
Gas Turbine Output	459,913
Steam Turbine Output	241,630
Gross Electric Output	701,542
Plant Auxiliaries	21,046
Net Cycle Electric Output	680,496

FUEL CONSUMPTION	
Gas Turbine - MBtuh LHV	4,434.9
Supp Firing - MBtuh LHV	0.0
Total Fuel - MBtuh LHV	4,434.9
Total Fuel - MBtuh HHV	4922.7

GAS TURBINE (Each)	
Electric Output - kW	229,956
Fuel Consumption - MBtuh	2217.44
Fuel Consumption - lb/hr	103,065
Heat Rate - Btu/kWh	9,643
Exhaust Flow - lb/hr	4,691,012
Exhaust Temp - deg F	1,173
Inlet Air Temp - deg F	90
Inlet Air Humidity	70%
Evaporative Cooler	Yes
GT Inlet Loss - in water	3.0
GT Exhaust Loss- in water	15.0
Altitude - ft	0

HEAT RATES	
Gas Turbine - Btu/kWh LHV	9,643
Combined Cycle - Btu/kWh LHV	6,517

STEAM TURBINE	Unit #1 / #2	Unit #3
Steam Turbine Throttle		
Pressure - Psig	1450.0	1450.0
Temperature - deg F	1001	1001
Flow - lb/hr	440,772	498,888
Cold Reheat		
Pressure - Psig	451	452
Temperature - deg F	742.7	720
Flow - lb/hr	424,878	481,713
Hot Reheat		
Pressure - Psig	404	405
Temperature - deg F	1003	1003
Flow - lb/hr	466,501	528,009
Admission		
Pressure - Psig	15	15
Temperature - deg F	374	375
Flow - lb/hr	34,407	53,925
Exhaust		
Pressure - In Hg	3.1	2.9
Enthalpy - Btu/lb	1080.7	1060.6
Flow - lb/hr	515,568	581,858
Generator Output		
Kilowatts	75,469	90,692
Power Factor	90.00%	90.00%
kVA	83,854	100,769

WASTE HEAT BOILER	HP	RHT	IP	LP	COND HTR
Fluid	Steam	Steam	Steam	Steam	Steam
Pressure - Psig	1450	406	418	15	30
Temperature - deg F	1001	1003	494	375	215
Flow - lb/hr	690,723	730,603	64,824	53,925	809,316
Blowdown - %	0.00%		0.00%	0.0%	
Heat Absorbed - MBtuh	874.6	115.84	65.9	82.7	77.8
Supp. Firing Temp - F	NA				
Stack Temp - deg F	214				

File: HBGEF9AT
Date: 7/24/00

North Bangkok Thermal Plant
Case: 90 deg F, 70% RH, Unfired

Headers

HRSGs	2

HP Steam Header

		Flow	Press	Temp	Enth
From HRSGs		1,380,431	1464.7	1001.1	1491.8
To ST #1	0.3193	440,772	1464.7	1001.1	1491.8
To ST #2	0.3193	440,772	1464.7	1001.1	1491.8
To ST #3	0.3614	498,888	1464.7	1001.1	1491.8

Cold Reheat Header

From ST #1		425,468	465.6	742.3	1,382.9
From ST #2		425,468	465.6	742.3	1,382.9
From ST #3		482,380	466.6	719.5	1,370.4
To HRSG's		1,333,316			1,378.4

Hot Reheat Header

From HRSGs		1,461,011	420.4	1003.4	1524.5
To ST #1	0.3193	466,501	420.4		1524.5
To ST #2	0.3193	466,501	420.4		1524.5
To ST #3	0.3614	528,009	420.4		1524.5

LP Steam Header

From HRSGs		107,757	29.7	374.5	1225.5
To ST #1	0.3193	34,407	29.7	374.5	1225.5
To ST #2	0.3193	34,407			1225.5
To ST #3	0.3614	38,943			1225.5

Condensate Header

From ST #1		516,891	50		87.20
From ST #2		516,891	50		87.20
From ST #3		584,230	50		86.14
To HRSG's		1,618,012	50		86.82

North Bangkok Thermal Plant
Case: 90 deg F, 70% RH, Unfired

PLANT DESCRIPTION	
Gas Turbines	V94.3A
Number of GT/WHB Units	2
NOx Control	Dry Low
Steam Turbine	Reheat
Number of Steam Turbines	3

ELECTRIC SUMMARY - kW	
Gas Turbine Output	416,428
Steam Turbine Output	209,340
Gross Electric Output	625,768
Plant Auxiliaries	18,773
Net Cycle Electric Output	606,995

FUEL CONSUMPTION	
Gas Turbine - MBtuh LHV	3,989.9
Supp Firing - MBtuh LHV	0.0
Total Fuel - MBtuh LHV	3,989.9
Total Fuel - MBtuh HHV	4428.8

GAS TURBINE (Each)	
Electric Output - kW	208,214
Fuel Consumption - MBtuh	1994.94
Fuel Consumption - lb/hr	92,723
Heat Rate - Btu/kWh	9,581
Exhaust Flow - lb/hr	4,722,467
Exhaust Temp - deg F	1,085
Inlet Air Temp - deg F	90
Inlet Air Humidity	70%
Evaporative Cooler	Yes
GT Inlet Loss - in water	3.0
GT Exhaust Loss- in water	15.0
Altitude - ft	0

HEAT RATES	
Gas Turbine - Btu/kWh LHV	9,581
Combined Cycle - Btu/kWh LHV	6,573

STEAM TURBINE	Unit #1 / #2	Unit #3
Steam Turbine Throttle		
Pressure - Psig	1450.0	1450.0
Temperature - deg F	997	997
Flow - lb/hr	363,859	411,834
Cold Reheat		
Pressure - Psig	388	388
Temperature - deg F	721.7	699
Flow - lb/hr	350,203	397,138
Hot Reheat		
Pressure - Psig	348	349
Temperature - deg F	1002	1002
Flow - lb/hr	403,366	456,552
Admission		
Pressure - Psig	15	15
Temperature - deg F	388	388
Flow - lb/hr	52,313	81,919
Exhaust		
Pressure - In Hg	2.7	2.9
Enthalpy - Btu/lb	1084.8	1069.9
Flow - lb/hr	468,202	528,426
Generator Output		
Kilowatts	65,604	78,133
Power Factor	90.00%	90.00%
kVA	72,893	86,814

WASTE HEAT BOILER	HP	RHT	IP	LP	COND HTR
Fluid	Steam	Steam	Steam	Steam	Steam
Pressure - Psig	1450	349	418	15	30
Temperature - deg F	997	1002	494	388	215
Flow - lb/hr	569,776	631,641	82,868	81,919	734,564
Blowdown - %	0.00%		0.00%	0.0%	
Heat Absorbed - MBtuh	720.6	109.05	84.2	109.0	73.2
Supp. Firing Temp - F	NA				
Stack Temp - deg F	218				

File: HBV943AT
Date: 7/17/00

North Bangkok Thermal Plant
Case: 90 deg F, 70% RH, Unfired
Headers

HRSGs 2

		Flow	Press	Temp	Enth
HP Steam Header					
From HRSGs		1,139,553	1464.7	996.8	1489.3
To ST #1	0.3193	363,859	1464.7	996.8	1489.3
To ST #2	0.3193	363,859	1464.7	996.8	1489.3
To ST #3	0.3614	411,834	1464.7	996.8	1489.3
Cold Reheat Header					
From ST #1		350,205	402.4	721.7	1,375.0
From ST #2		350,205	402.4	721.7	1,375.0
From ST #3		397,141	403.2	698.6	1,362.4
To HRSG's		1,097,551			1,370.5
Hot Reheat Header					
From HRSGs		1,263,283	363.3	1002.3	1525.5
To ST #1	0.3193	403,366	363.3		1525.5
To ST #2	0.3193	403,366	363.3		1525.5
To ST #3	0.3614	456,550	363.3		1525.5
LP Steam Header					
From HRSGs		163,838	29.7	387.9	1232.0
To ST #1	0.3193	52,313	29.7	387.9	1232.0
To ST #2	0.3193	52,313			1232.0
To ST #3	0.3614	59,211			1232.0
Condensate Header					
From ST #1		469,336	50		81.67
From ST #2		469,336	50		81.67
From ST #3		530,457	50		86.45
To HRSG's		1,469,128	50		83.39

Heat Balance - Arrangement A
2-V94.3A Gas Turbines with Duct Firing

North Bangkok Thermal Plant
Case: 90 deg F, 75% RH, Fired

PLANT DESCRIPTION	
Gas Turbines	V94.3A
Number of GT/WHB Units	2
NOx Control	Dry Low
Steam Turbine	Reheat
Number of Steam Turbines	3

ELECTRIC SUMMARY - kW	
Gas Turbine Output	416,428
Steam Turbine Output	237,788
Gross Electric Output	654,216
Plant Auxiliaries	19,626
Net Cycle Electric Output	634,590

FUEL CONSUMPTION	
Gas Turbine - MBtuh LHV	3,989.9
Supp Firing - MBtuh LHV	270.8
Total Fuel - MBtuh LHV	4,260.6
Total Fuel - MBtuh HHV	4729.3

GAS TURBINE (Each)	
Electric Output - kW	208,214
Fuel Consumption - MBtuh	1994.94
Fuel Consumption - lb/hr	92,723
Heat Rate - Btu/kWh	9,581
Exhaust Flow - lb/hr	4,722,467
Exhaust Temp - deg F	1,085
Inlet Air Temp - deg F	90
Inlet Air Humidity	70%
Evaporative Cooler	Yes
GT Inlet Loss - in water	3.0
GT Exhaust Loss- in water	15.0
Altitude - ft	0

HEAT RATES	
Gas Turbine - Btu/kWh LHV	9,581
Combined Cycle - Btu/kWh LHV	6,714

STEAM TURBINE	Unit #1 / #2	Unit #3
Steam Turbine Throttle		
Pressure - Psig	1450.0	1450.0
Temperature - deg F	1006	1006
Flow - lb/hr	415,667	470,473
Cold Reheat		
Pressure - Psig	447	448
Temperature - deg F	748.6	726
Flow - lb/hr	400,169	453,780
Hot Reheat		
Pressure - Psig	401	402
Temperature - deg F	1000	1000
Flow - lb/hr	463,721	524,860
Admission		
Pressure - Psig	15	15
Temperature - deg F	405	405
Flow - lb/hr	39,877	62,445
Exhaust		
Pressure - In Hg	2.9	3.2
Enthalpy - Btu/lb	1079.9	1064.5
Flow - lb/hr	517,892	584,463
Generator Output		
Kilowatts	74,526	88,736
Power Factor	90.00%	90.00%
kVa	82,807	98,596

WASTE HEAT BOILER	HP	RHT	IP	LP	COND HTR
Fluid	Steam	Steam	Steam	Steam	Steam
Pressure - Psig	1450	402	418	15	30
Temperature - deg F	1006	1000	498	405	210
Flow - lb/hr	650,903	726,152	73,982	62,445	787326.412
Blowdown - %	0.00%		0.00%	0.0%	
Heat Absorbed - MBtuh	832.0	141.69	75.4	95.1	72.9
Supp. Firing Temp - F	1,170				
Stack Temp - deg F	216				

File: HBV943ATSF
Date: 7/27/00

North Bangkok Thermal Plant
Case: 90 deg F, 75% RH, Fired

Headers

HRSGs	2

HP Steam Header

		Flow	Press	Temp	Enth
From HRSGs		1,301,807	1464.7	1005.6	1494.5
To ST #1	0.3193	415,667	1464.7	1005.6	1494.5
To ST #2	0.3193	415,667	1464.7	1005.6	1494.5
To ST #3	0.3614	470,473	1464.7	1005.6	1494.5

Cold Reheat Header

From ST #1		400,167	461.8	748.5	1,386.5
From ST #2		400,167	461.8	748.5	1,386.5
From ST #3		453,779	462.9	725.6	1,374.0
To HRSG's		1,254,113			1,382.0

Hot Reheat Header

From HRSGs		1,452,304	417.0	1000.5	1523.0
To ST #1	0.3193	463,721	417.0		1523.0
To ST #2	0.3193	463,721	417.0		1523.0
To ST #3	0.3614	524,863	417.0		1523.0

LP Steam Header

From HRSGs		124,890	29.7	404.6	1240.1
To ST #1	0.3193	39,877	29.7	404.6	1240.1
To ST #2	0.3193	39,877			1240.1
To ST #3	0.3614	45,135			1240.1

Condensate Header

From ST #1		519,116	50		84.25
From ST #2		519,116	50		84.25
From ST #3		586,713	50		89.36
To HRSG's		1,624,946	50		86.09

Heat Balance - Arrangement B

V94.2 Gas Turbines for Units 1 and 2 Without Duct Firing

North Bangkok Thermal Plant
Case: 90 deg F, 70% RH, Unfired

PLANT DESCRIPTION	
Gas Turbines	V94.2
Number of GT/WHB Units	1
NOx Control	Dry Low
Steam Turbine	Reheat
Number of Steam Turbines	1

ELECTRIC SUMMARY - kW	
Gas Turbine Output	141,291
Steam Turbine Output	73,447
Gross Electric Output	214,738
Plant Auxiliaries	6,442
Net Cycle Electric Output	208,295

FUEL CONSUMPTION	
Gas Turbine - MBtuh LHV	1,460.2
Supp Firing - MBtuh LHV	-
Total Fuel - MBtuh LHV	1,460.2
Total Fuel - MBtuh HHV	1,620.8

GAS TURBINE (Each)	
Electric Output - kW	141,291
Fuel Consumption - MBtuh	1,460.2
Fuel Consumption - lb/hr	67,868
Heat Rate - Btu/kWh	10,335
Exhaust Flow - lb/hr	3,879,367
Exhaust Temp - deg F	1,021
Inlet Air Temp - deg F	90
Inlet Air Humidity	70%
Evaporative Cooler	Yes
GT Inlet Loss - in water	3.0
GT Exhaust Loss- in water	15.0
Altitude - ft	0

HEAT RATES	
Gas Turbine - Btu/kWh LHV	10,335
Combined Cycle - Btu/kWh LHV	7,010

STEAM TURBINE	
Steam Turbine Throttle	
Pressure - Psig	1,450
Temperature - deg F	921
Flow - lb/hr	412,358
Cold Reheat	
Pressure - Psig	452
Temperature - deg F	675
Flow - lb/hr	396,326
Hot Reheat	
Pressure - Psig	406
Temperature - deg F	971
Flow - lb/hr	473,986
Admission	
Pressure - Psig	15
Temperature - deg F	397
Flow - lb/hr	78,751
Exhaust	
Pressure - In Hg	3.1
Enthalpy - Btu/lb	1,083.0
Flow - lb/hr	567,505
Generator Output	
Kilowatts	73,447
Power Factor	90%
kVA	81,607

WASTE HEAT BOILER	HP	RHT	IP	LP	COND HTR
Fluid	Steam	Steam	Steam	Steam	Steam
Pressure - Psig	1,450	406	418	15	30
Temperature - deg F	921	971	498	397	215
Flow - lb/hr	412,358	473,987	77,660	78,751	568,769
Blowdown - %	0.0%		0.0%	0.0%	
Heat Absorbed - MBtuh	502.7	84.8	79.1	100.3	54.7
Supp. Firing Temp - F	NA				
Stack Temp - deg F	223				

File: HBV942T75
Date: 6/1/00

North Bangkok Thermal Plant
Case: 90 deg F, 70% RH, Unfired

Auxiliary Equipment

Condenser	Flow lb/hr	Press in Hg	Temp Deg F	Enth Btu/lb	Heat Flow Btu/hr
LP Exhaust	567,506			1,083.0	6.146E+08
GC Drain	983			180.2	1.772E+05
Reg	280			1,288.9	3.609E+05
Drain	568,769	3.12	116.4	84.4	4.801E+07
Heat Rejected					5.671E+08

Condensate Pump	Flow lb/hr	Press psia	Temp Deg F	Enth Btu/lb	Efficiency
Inlet	568,769	1.5		84.4	
Disch	568,769	50.0		84.6	65%

Fluid Power	1.270E+05	Btuh
	37	kW

Deaerator	Flow	Press	Temp	Enth	Heat
Cond In	568,769	34.7	214.8	183.0	1.041E+08
Steam In	21,199	34.7	258.8	1,167.0	2.474E+07
Makeup	-	34.7	50.0	18.2	0.000E+00
Blowdown	-	34.7		1,164.0	0.000E+00
Drain	589,968	29.7	249.8	218.3	1.288E+08

Feedpump	Flow	Press	Enth	Efficiency
Inlet	490,018	29.7	218.3	
Disch Lo	77,660	447.7	220.2	70%
Disch Hi	412,360	1,550.8	224.7	75%

Fluid Power	2.777E+06	Btuh
	814	kW

File: HBV942T75
Date: 6/1/00

Heat Balance - Arrangement B
V94.2 A Gas Turbine for Unit 3 Without Duct Firing

North Bangkok Thermal Plant
Case: 90 deg F, 70% RH, Unfired

PLANT DESCRIPTION	
Gas Turbines	V94.2A
Number of GT/WHB Units	1
NOx Control	Dry Low
Steam Turbine	Reheat
Number of Steam Turbines	1

ELECTRIC SUMMARY - kW	
Gas Turbine Output	168,304
Steam Turbine Output	90,924
Gross Electric Output	259,228
Plant Auxiliaries	7,777
Net Cycle Electric Output	251,451

FUEL CONSUMPTION	
Gas Turbine - MBtuh LHV	1,665.2
Supp Firing - MBtuh LHV	-
Total Fuel - MBtuh LHV	1,665.2
Total Fuel - MBtuh HHV	1,848.4

GAS TURBINE (Each)	
Electric Output - kW	168,304
Fuel Consumption - MBtuh	1,665.2
Fuel Consumption - lb/hr	77,399
Heat Rate - Btu/kWh	9,894
Exhaust Flow - lb/hr	3,977,994
Exhaust Temp - deg F	1,094
Inlet Air Temp - deg F	90
Inlet Air Humidity	70%
Evaporative Cooler	Yes
GT Inlet Loss - in water	3.0
GT Exhaust Loss- in water	15.0
Altitude - ft	0

HEAT RATES	
Gas Turbine - Btu/kWh LHV	9,894
Combined Cycle - Btu/kWh LHV	6,623

STEAM TURBINE	
Steam Turbine Throttle	
Pressure - Psig	1,450
Temperature - deg F	1,000
Flow - lb/hr	494,443
Cold Reheat	
Pressure - Psig	466
Temperature - deg F	743
Flow - lb/hr	475,855
Hot Reheat	
Pressure - Psig	418
Temperature - deg F	1,000
Flow - lb/hr	544,841
Admission	
Pressure - Psig	15
Temperature - deg F	387
Flow - lb/hr	65,559
Exhaust	
Pressure - In Hg	3.4
Enthalpy - Btu/lb	1,067.6
Flow - lb/hr	626,461
Generator Output	
Kilowatts	90,920
Power Factor	90%
kVA	101,023

WASTE HEAT BOILER	HP	RHT	IP	LP	COND HTR
Fluid	Steam	Steam	Steam	Steam	Steam
Pressure - Psig	1,450	418	418	15	30
Temperature - deg F	1,000	1,000	498	387	215
Flow - lb/hr	494,443	544,839	68,986	65,559	628,987
Blowdown - %	0.0%		0.0%	0.0%	
Heat Absorbed - MBtuh	626.1	86.1	70.3	88.7	57.3
Supp. Firing Temp - F	NA				
Stack Temp - deg F	222				

File: HBV942AT88
Date: 7/17/00

North Bangkok Thermal Plant
Case: 90 deg F, 70% RH, Unfired

Auxiliary Equipment

Condenser	Flow lb/hr	Press in Hg	Temp Deg F	Enth Btu/lb	Heat Flow Btu/hr
LP Exhaust	626,462			1,067.6	6.688E+08
GC Drain	2,247			180.2	4.048E+05
Reg	280			1,310.8	3.670E+05
Drain	628,989	3.36	119.1	87.1	5.478E+07
Heat Rejected					6.148E+08

Condensate Pump	Flow lb/hr	Press psia	Temp Deg F	Enth Btu/lb	Efficiency
Inlet	628,989	1.7		87.1	
Disch	628,989	50.0		87.3	65%

Fluid Power	1.402E+05	Btuh
	41	kW

Deaerator	Flow	Press	Temp	Enth	Heat
Cond In	628,987	34.7	214.8	183.0	1.151E+08
Steam In	23,443	34.7	258.8	1,167.0	2.736E+07
Makeup	-	34.7	50.0	18.2	0.000E+00
Blowdown	-	34.7		1,164.0	0.000E+00
Drain	652,431	29.7	249.8	218.3	1.425E+08

Feedpump	Flow	Press	Enth	Efficiency
Inlet	563,428	29.7	218.3	
Disch Lo	68,986	447.7	220.2	70%
Disch Hi	494,445	1,550.8	224.7	75%

Fluid Power	3.285E+06	Btuh
	963	kW

Heat Balance - Arrangement B
MW701D Gas Turbines for Units 1 and 2 Without Duct Firing

NORTH BANGKOK THERMAL PLANT
Case: 90 deg F, 70% RH, Unfired

PLANT DESCRIPTION	
Gas Turbines	MW 701 D
Number of GT/WHB Units	1
NOx Control	Water Inj
Steam Turbine	Reheat
Number of Steam Turbines	1

ELECTRIC SUMMARY - kW	
Gas Turbine Output	129,360
Steam Turbine Output	65,668

Gross Electric Output	195,028
Plant Auxiliaries	5,851

Net Cycle Electric Output	189,177

FUEL CONSUMPTION	
Gas Turbine - MBtuh LHV	1,395.1
Supp Firing - MBtuh LHV	0.0

Total Fuel - MBtuh LHV	1,395.1
Total Fuel - MBtuh HHV	1548.5

GAS TURBINE (Each)	
Electric Output - kW	129,360
Fuel Consumption - MBtuh	1395.08
Fuel Consumption - lb/hr	64,842
Heat Rate - Btu/kWh	10,785
Exhaust Flow - lb/hr	3,491,201
Exhaust Temp - deg F	990
Inlet Air Temp - deg F	90
Inlet Air Humidity	70%
Evaporative Cooler	Yes
GT Inlet Loss - in water	3.0
GT Exhaust Loss- in water	15.0
Altitude - ft	0

HEAT RATES	
Gas Turbine - Btu/kWh LHV	10,785
Combined Cycle - Btu/kWh LHV	7,374

STEAM TURBINE	
Steam Turbine Throttle	
Pressure - Psig	1450.0
Temperature - deg F	921
Flow - lb/hr	357,815
Cold Reheat	
Pressure - Psig	389
Temperature - deg F	656
Flow - lb/hr	343,839
Hot Reheat	
Pressure - Psig	349
Temperature - deg F	932
Flow - lb/hr	415,737
Admission	
Pressure - Psig	15
Temperature - deg F	383
Flow - lb/hr	77,476
Exhaust	
Pressure - In Hg	2.7
Enthalpy - Btu/lb	1062.8
Flow - lb/hr	506,031
Generator Output	
Kilowatts	65,668
Power Factor	90.00%
kVA	72,965

WASTE HEAT BOILER	HP	RHT	IP	LP	COND HTR
Fluid	Steam	Steam	Steam	Steam	Steam
Pressure - Psig	1450	349	418	15	30
Temperature - deg F	921	932	495	383	219
Flow - lb/hr	357,815	415,749	71,898	77,476	507,185
Blowdown - %	0.00%		0.00%	0.0%	
Heat Absorbed - MBtuh	436.1	69.51	73.1	94.2	53.2
Supp. Firing Temp - F	NA				
Stack Temp - deg F	222				

File: HBMW701T75
Date: 9/6/00

NORTH BANGKOK THERMAL PLANT
Case: 90 deg F, 70% RH, Unfired

Auxiliary Equipment

Condenser	Flow lb/hr	Press in Hg	Temp Deg F	Enth Btu/lb	Heat Flow Btu/hr
LP Exhaust	506,028			1,062.8	5.378E+08
GC Drain	878			180.2	1.582E+05
Reg	280			1,286.3	3.602E+05
Drain	507,186	2.74	111.9	79.9	4.052E+07
Heat Rejected					4.978E+08

Condensate Pump	Flow lb/hr	Press psia	Temp Deg F	Enth Btu/lb	Efficiency
Inlet	507,186	1.3		79.9	
Disch	507,186	50.0		80.1	65%

Fluid Power	1.136E+05	Btuh
	33	kW

Deaerator	Flow	Press	Temp	Enth	Heat
Cond In	507,191	34.7	218.9	187.2	9.493E+07
Steam In	16,666	34.7	258.8	1,167.0	1.945E+07
Makeup	-	34.7	50.0	18.2	0.000E+00
Blowdown	-	34.7		1,164.0	0.000E+00
Drain	523,856	29.7	249.8	218.3	1.144E+08

Feedpump	Flow	Press	Enth	Efficiency
Inlet	429,714	29.7	218.3	
Disch Lo	71,897	447.7	220.2	70%
Disch Hi	357,815	1,550.8	224.7	75%

Fluid Power	2.418E+06	Btuh
	709	kW

Heat Balance - Arrangement B
MW701D Gas Turbines for Units 1 and 2 With Duct Firing

NORTH BANGKOK THERMAL PLANT
Case: 90 deg F, 70% RH, Fired

PLANT DESCRIPTION	
Gas Turbines	MW 701 D
Number of GT/WHB Units	1
NOx Control	Water Inj
Steam Turbine	Reheat
Number of Steam Turbines	1

ELECTRIC SUMMARY - kW	
Gas Turbine Output	129,360
Steam Turbine Output	75,002

Gross Electric Output	204,362
Plant Auxiliaries	6,131

Net Cycle Electric Output	198,231

FUEL CONSUMPTION	
Gas Turbine - MBtuh LHV	1,395.1
Supp Firing - MBtuh LHV	76.5

Total Fuel - MBtuh LHV	1,471.5
Total Fuel - MBtuh HHV	1633.4

GAS TURBINE (Each)	
Electric Output - kW	129,360
Fuel Consumption - MBtuh	1395.08
Fuel Consumption - lb/hr	64,842
Heat Rate - Btu/kWh	10,785
Exhaust Flow - lb/hr	3,491,201
Exhaust Temp - deg F	990
Inlet Air Temp - deg F	90
Inlet Air Humidity	70%
Evaporative Cooler	Yes
GT Inlet Loss - in water	3.0
GT Exhaust Loss- in water	15.0
Altitude - ft	0

HEAT RATES	
Gas Turbine - Btu/kWh LHV	10,785
Combined Cycle - Btu/kWh LHV	7,423

STEAM TURBINE	
Steam Turbine Throttle	
Pressure - Psig	1450.0
Temperature - deg F	970
Flow - lb/hr	408,711
Cold Reheat	
Pressure - Psig	441
Temperature - deg F	715
Flow - lb/hr	393,226
Hot Reheat	
Pressure - Psig	396
Temperature - deg F	985
Flow - lb/hr	460,368
Admission	
Pressure - Psig	15
Temperature - deg F	392
Flow - lb/hr	66,313
Exhaust	
Pressure - In Hg	2.9
Enthalpy - Btu/lb	1070.1
Flow - lb/hr	540,937
Generator Output	
Kilowatts	75,002
Power Factor	90.00%
kVa	83,335

WASTE HEAT BOILER	HP	RHT	IP	LP	COND HTR
Fluid	Steam	Steam	Steam	Steam	Steam
Pressure - Psig	1450	396	418	15	30
Temperature - deg F	970	985	498	392	215
Flow - lb/hr	408,713	460,343	67,142	66,319	542,167
Blowdown - %	0.00%		0.00%	0.0%	
Heat Absorbed - MBtuh	510.3	76.04	68.4	86.5	53.5
Supp. Firing Temp - F	1,055				
Stack Temp - deg F	220				

File: HBW701SFT75
Date: 9/6/00

NORTH BANGKOK THERMAL PLANT
Case: 90 deg F, 70% RH, Fired

Auxiliary Equipment

Condenser	Flow lb/hr	Press in Hg	Temp Deg F	Enth Btu/lb	Heat Flow Btu/hr
LP Exhaust	540,937			1,070.1	5.788E+08
GC Drain	948			180.2	1.708E+05
Reg	280			1,307.9	3.662E+05
Drain	542,165	2.91	113.9	81.9	4.440E+07
Heat Rejected					5.350E+08

Condensate Pump	Flow lb/hr	Press psia	Temp Deg F	Enth Btu/lb	Efficiency
Inlet	542,165	1.4		81.9	
Disch	542,165	50.0		82.1	65%

Fluid Power	1.213E+05	Btuh
	36	kW

Deaerator	Flow	Press	Temp	Enth	Heat
Cond In	542,161	34.7	214.8	183.0	9.921E+07
Steam In	20,207	34.7	258.8	1,167.0	2.358E+07
Makeup	-	34.7	50.0	18.2	0.000E+00
Blowdown	-	34.7		1,164.0	0.000E+00
Drain	562,369	29.7	249.8	218.3	1.228E+08

Feedpump	Flow	Press	Enth	Efficiency
Inlet	475,848	29.7	218.3	
Disch Lo	67,141	447.7	220.2	70%
Disch Hi	408,713	1,550.8	224.7	75%

Fluid Power	2.735E+06	Btuh
	802	kW

Heat Balance - Arrangement B

MW701D Gas Turbine for Unit 3 Without Duct Firing

NORTH BANGKOK THERMAL PLANT

Case: 90 deg F, 70% RH, Unfired

PLANT DESCRIPTION	
Gas Turbines	MW 701D
Number of GT/WHB Units	1
NOx Control	Water Inj
Steam Turbine	Reheat
Number of Steam Turbines	1

ELECTRIC SUMMARY - kW	
Gas Turbine Output	129,360
Steam Turbine Output	67,891

Gross Electric Output	197,251
Plant Auxiliaries	5,918

Net Cycle Electric Output	191,334

FUEL CONSUMPTION	
Gas Turbine - MBtuh LHV	1,395.1
Supp Firing - MBtuh LHV	0.0

Total Fuel - MBtuh LHV	1,395.1
Total Fuel - MBtuh HHV	1548.5

GAS TURBINE (Each)	
Electric Output - kW	129,360
Fuel Consumption - MBtuh	1395.08
Fuel Consumption - lb/hr	64,842
Heat Rate - Btu/kWh	10,785
Exhaust Flow - lb/hr	3,491,201
Exhaust Temp - deg F	990
Inlet Air Temp - deg F	90
Inlet Air Humidity	70%
Evaporative Cooler	Yes
GT Inlet Loss - in water	3.0
GT Exhaust Loss- in water	15.0
Altitude - ft	0

HEAT RATES	
Gas Turbine - Btu/kWh LHV	10,785
Combined Cycle - Btu/kWh LHV	7,291

STEAM TURBINE	
Steam Turbine Throttle	
Pressure - Psig	1450.0
Temperature - deg F	913
Flow - lb/hr	364,365
Cold Reheat	
Pressure - Psig	342
Temperature - deg F	626
Flow - lb/hr	350,042
Hot Reheat	
Pressure - Psig	307
Temperature - deg F	905
Flow - lb/hr	418,914
Admission	
Pressure - Psig	17
Temperature - deg F	351
Flow - lb/hr	77,274
Exhaust	
Pressure - in Hg	2.7
Enthalpy - Btu/lb	1044.0
Flow - lb/hr	508,448
Generator Output	
Kilowatts	67,891
Power Factor	90.00%
kVA	75,435

WASTE HEAT BOILER	HP	RHT	IP	LP	COND HTR
Fluid	Steam	Steam	Steam	Steam	Steam
Pressure - Psig	1450	307	418	17	32
Temperature - deg F	913	905	492	351	233
Flow - lb/hr	364,365	418,914	68,696	77,274	510,334
Blowdown - %	0.00%		0.00%	0.0%	
Heat Absorbed - MBtuh	440.9	69.04	69.5	87.2	59.9
Supp. Firing Temp - F	NA				
Stack Temp - deg F	221				

File: HBMW701T88

Date: 9/7/00

NORTH BANGKOK THERMAL PLANT
Case: 90 deg F, 70% RH, unfired

Auxiliary Equipment

Condenser	Flow lb/hr	Press in Hg	Temp Deg F	Enth Btu/lb	Heat Flow Btu/hr
LP Exhaust	506,349			1,047.4	5.303E+08
GC Drain	1,882			180.2	3.391E+05
Reg	280			1,276.6	3.575E+05
Drain	508,511	2.71	111.5	79.4	4.040E+07
Heat Rejected					4.906E+08

Condensate Pump	Flow lb/hr	Press psia	Temp Deg F	Enth Btu/lb	Efficiency
Inlet	508,511	1.3		79.4	
Disch	508,511	50.0		79.7	65%

Fluid Power	1.139E+05	Btuh
	33	kW

Deaerator	Flow	Press	Temp	Enth	Heat
Cond In	507,683	42.7	240.1	208.6	1.059E+08
Steam In	12,915	42.7	271.2	1,171.0	1.512E+07
Makeup	-	42.7	50.0	18.2	0.000E+00
Blowdown	-	42.7		1,168.6	0.000E+00
Drain	520,598	37.7	263.7	232.5	1.210E+08

Feedpump	Flow	Press	Enth	Efficiency
Inlet	435,340	37.7	232.5	
Disch Lo	69,113	447.7	234.4	70%
Disch Hi	366,085	1,550.8	238.9	75%

Fluid Power	2.434E+06	Btuh
	713	kW

Heat Balance - Arrangment B
MW701D Gas Turbine for Unit 3 With Duct Firing

NORTH BANGKOK THERMAL PLANT
Case: 90 deg F, 70% RH, Fired

PLANT DESCRIPTION	
Gas Turbines	MW 701D
Number of GT/WHB Units	1
NOx Control	Water Inj
Steam Turbine	Reheat
Number of Steam Turbines	1

ELECTRIC SUMMARY - kW	
Gas Turbine Output	129,360
Steam Turbine Output	88,092

Gross Electric Output	217,452
Plant Auxiliaries	6,524

Net Cycle Electric Output	210,929

FUEL CONSUMPTION	
Gas Turbine - MBtuh LHV	1,395.1
Supp Firing - MBtuh LHV	164.0

Total Fuel - MBtuh LHV	1,559.0
Total Fuel - MBtuh HHV	1730.5

GAS TURBINE (Each)	
Electric Output - kW	129,360
Fuel Consumption - MBtuh	1395.08
Fuel Consumption - lb/hr	64,842
Heat Rate - Btu/kWh	10,785
Exhaust Flow - lb/hr	3,491,201
Exhaust Temp - deg F	990
Inlet Air Temp - deg F	90
Inlet Air Humidity	70%
Evaporative Cooler	Yes
GT Inlet Loss - in water	3.0
GT Exhaust Loss- in water	15.0
Altitude - ft	0

HEAT RATES	
Gas Turbine - Btu/kWh LHV	10,785
Combined Cycle - Btu/kWh LHV	7,391

STEAM TURBINE	
Steam Turbine Throttle	
Pressure - Psig	1450.0
Temperature - deg F	999
Flow - lb/hr	471,945
Cold Reheat	
Pressure - Psig	442
Temperature - deg F	734
Flow - lb/hr	454,204
Hot Reheat	
Pressure - Psig	397
Temperature - deg F	998
Flow - lb/hr	518,220
Admission	
Pressure - Psig	23
Temperature - deg F	383
Flow - lb/hr	47,938
Exhaust	
Pressure - In Hg	3.0
Enthalpy - Btu/lb	1055.6
Flow - lb/hr	581,472
Generator Output	
Kilowatts	88,092
Power Factor	90.00%
kVA	97,880

WASTE HEAT BOILER	HP	RHT	IP	LP	COND HTR
Fluid	Steam	Steam	Steam	Steam	Steam
Pressure - Psig	1450	397	418	23	38
Temperature - deg F	999	998	498	383	229
Flow - lb/hr	471,945	518,220	58,836	47,938	583,901
Blowdown - %	0.00%		0.00%	0.0%	
Heat Absorbed - MBtuh	590.7	87.73	59.6	68.4	63.4
Supp. Firing Temp - F	1128				
Stack Temp - deg F	222				

File: HBMW701SFT88
Date: 9/7/00

NORTH BANGKOK THERMAL PLANT
Case: 90 deg F, 70% RH, Fired

Auxiliary Equipment

Condenser	Flow lb/hr	Press in Hg	Temp Deg F	Enth Btu/lb	Heat Flow Btu/hr
LP Exhaust	581,469			1,055.6	6.138E+08
GC Drain	2,147			180.2	3.869E+05
Reg	280			1,312.9	3.676E+05
Drain	583,896	3.05	115.6	83.6	4.879E+07
Heat Rejected					5.658E+08

Condensate Pump	Flow lb/hr	Press psia	Temp Deg F	Enth Btu/lb	Efficiency
Inlet	583,896	1.5		83.6	
Disch	583,896	50.0		83.8	65%

Fluid Power 1.305E+05 Btuh
38 kW

Deaerator	Flow	Press	Temp	Enth	Heat
Cond In	583,902	42.7	228.7	197.1	1.151E+08
Steam In	22,062	42.7	271.2	1,171.0	2.583E+07
Makeup	-	42.7	50.0	18.2	0.000E+00
Blowdown	-	42.7		1,168.6	0.000E+00
Drain	605,964	37.7	263.7	232.5	1.409E+08

Feedpump	Flow	Press	Enth	Efficiency
Inlet	535,961	37.7	232.5	
Disch Lo	64,019	447.7	234.4	70%
Disch Hi	471,942	1,550.8	238.9	75%

Fluid Power 3.134E+06 Btuh
919 kW

Heat Balance - Arrangement C

PG6101FA Gas Turbines for Units 1 and 2 Without Duct Firing

North Bangkok Thermal Plant
Case: 90 deg F, 70% RH, Unfired

PLANT DESCRIPTION	
Gas Turbines	GE PG6101FA
Number of GT/WHB Units	2
NOx Control	Dry Low
Steam Turbine	Reheat
Number of Steam Turbines	1

ELECTRIC SUMMARY - kW	
Gas Turbine Output	124,001
Steam Turbine Output	72,251
Gross Electric Output	196,252
Plant Auxiliaries	5,888
Net Cycle Electric Output	190,365

FUEL CONSUMPTION	
Gas Turbine - MBtuh LHV	1,308.0
Supp Firing - MBtuh LHV	0.0
Total Fuel - MBtuh LHV	1,308.0
Total Fuel - MBtuh HHV	1451.9

GAS TURBINE (Each)	
Electric Output - kW	62,001
Fuel Consumption - MBtuh	654.00
Fuel Consumption - lb/hr	30,398
Heat Rate - Btu/kWh	10,548
Exhaust Flow - lb/hr	1,509,560
Exhaust Temp - deg F	1,138
Inlet Air Temp - deg F	90
Inlet Air Humidity	70%
Evaporative Cooler	Yes
GT Inlet Loss - in water	3.0
GT Exhaust Loss- in water	15.0
Altitude - ft	0

HEAT RATES	
Gas Turbine - Btu/kWh LHV	10,548
Combined Cycle - Btu/kWh LHV	6,871

STEAM TURBINE	
Steam Turbine Throttle	
Pressure - Psig	1450.0
Temperature - deg F	1000
Flow - lb/hr	413,270
Cold Reheat	
Pressure - Psig	427
Temperature - deg F	735
Flow - lb/hr	398,192
Hot Reheat	
Pressure - Psig	398
Temperature - deg F	1000
Flow - lb/hr	443,763
Admission	
Pressure - Psig	15
Temperature - deg F	431
Flow - lb/hr	41,465
Exhaust	
Pressure - In Hg	2.8
Enthalpy - Btu/lb	1081.1
Flow - lb/hr	499,111
Generator Output	
Kilowatts	72,252
Power Factor	90.00%
kVA	80,280

WASTE HEAT BOILER	HP	RHT	IP	LP	COND HTR
Fluid	Steam	Steam	Steam	Steam	Steam
Pressure - Psig	1450	384	418	15	30
Temperature - deg F	999	1000	498	431	215
Flow - lb/hr	206,635	221,889	22,786	20,733	250,153
Blowdown - %	0.00%		0.00%	0.0%	
Heat Absorbed - MBtuh	261.6	34.97	23.2	30.3	30.9
Supp. Firing Temp - F	NA				
Stack Temp - deg F	199				

File: HBGEF6T75
Date: 7/24/00

North Bangkok Thermal Plant
Case: 90 deg F, 70% RH, Unfired

Auxiliary Equipment

Condenser	Flow lb/hr	Press in Hg	Temp Deg F	Enth Btu/lb	Heat Flow Btu/hr
LP Exhaust	499,111			1,081.1	5.396E+08
GC Drain	916			180.2	1.650E+05
Reg	280			1,310.7	3.670E+05
Drain	500,307	2.75	112.0	80.0	4.003E+07
Heat Rejected					5.001E+08

Condensate Pump	Flow lb/hr	Press psia	Temp Deg F	Enth Btu/lb	Efficiency
Inlet	500,307	1.4		80.0	
Disch	500,307	50.0		80.2	65%

Fluid Power	1.120E+05	Btuh
	33	kW

Deaerator	Flow	Press	Temp	Enth	Heat
Cond In	250,153	34.7	214.8	183.0	4.577E+07
Steam In	9,324	34.7	258.8	1,167.0	1.088E+07
Makeup	-	34.7	50.0	18.2	0.000E+00
Blowdown	-	34.7		1,164.0	0.000E+00
Drain	259,476	29.7	249.8	218.3	5.665E+07

Feedpump	Flow	Press	Enth	Efficiency
Inlet	229,423	29.7	218.3	
Disch Lo	22,786	447.7	220.2	70%
Disch Hi	206,643	1,550.8	224.7	75%

Fluid Power	1.362E+06	Btuh
	399	kW

Heat Balance - Arrangement C

GEPG6101FA Gas Turbines for Units 1 and 2 With Duct Firing

North Bangkok Thermal Plant
Case: 90 deg F, 70% RH, Fired

PLANT DESCRIPTION	
Gas Turbines	GE PG6101FA
Number of GT/WHB Units	2
NOx Control	Dry Low
Steam Turbine	Reheat
Number of Steam Turbines	1

ELECTRIC SUMMARY - kW	
Gas Turbine Output	124,001
Steam Turbine Output	74,990
Gross Electric Output	198,992
Plant Auxiliaries	5,970
Net Cycle Electric Output	193,022

FUEL CONSUMPTION	
Gas Turbine - MBtuh LHV	1,308.0
Supp Firing - MBtuh LHV	23.2
Total Fuel - MBtuh LHV	1,331.3
Total Fuel - MBtuh HHV	1477.7

GAS TURBINE (Each)	
Electric Output - kW	62,001
Fuel Consumption - MBtuh	654.00
Fuel Consumption - lb/hr	30,398
Heat Rate - Btu/kWh	10,548
Exhaust Flow - lb/hr	1,509,560
Exhaust Temp - deg F	1,138
Inlet Air Temp - deg F	90
Inlet Air Humidity	70%
Evaporative Cooler	Yes
GT Inlet Loss - in water	3.0
GT Exhaust Loss- in water	15.0
Altitude - ft	0

HEAT RATES	
Gas Turbine - Btu/kWh LHV	10,548
Combined Cycle - Btu/kWh LHV	6,897

STEAM TURBINE	
Steam Turbine Throttle	
Pressure - Psig	1450.0
Temperature - deg F	1000
Flow - lb/hr	434,177
Cold Reheat	
Pressure - Psig	445
Temperature - deg F	740
Flow - lb/hr	418,486
Hot Reheat	
Pressure - Psig	414
Temperature - deg F	1000
Flow - lb/hr	461,124
Admission	
Pressure - Psig	15
Temperature - deg F	427
Flow - lb/hr	36,782
Exhaust	
Pressure - In Hg	2.81
Enthalpy - Btu/lb	1079.2
Flow - lb/hr	512,373
Generator Output	
Kilowatts	74,989
Power Factor	90.00%
kVA	83,321

WASTE HEAT BOILER	HP	RHT	IP	LP	COND HTR
Fluid	Steam	Steam	Steam	Steam	Steam
Pressure - Psig	1450	399	418	15	30
Temperature - deg F	1000	1000	498	427	215
Flow - lb/hr	217,088	230,562	21,320	18,391	256,798
Blowdown - %	0.00%		0.00%	0.0%	
Heat Absorbed - MBtuh	274.9	35.54	21.7	28.1	31.7
Supp. Firing Temp - F	1,161				
Stack Temp - deg F	197				

File: HBGEF6T75S
Date: 7/24/00

North Bangkok Thermal Plant
Case: 90 deg F, 70% RH, Fired

Auxiliary Equipment

Condenser	Flow lb/hr	Press in Hg	Temp Deg F	Enth Btu/lb	Heat Flow Btu/hr
LP Exhaust	512,374			1,079.2	5.529E+08
GC Drain	944			180.2	1.700E+05
Reg	280			1,311.5	3.672E+05
Drain	513,598	2.81	112.7	80.7	4.143E+07
Heat Rejected					5.121E+08

Condensate Pump	Flow lb/hr	Press psia	Temp Deg F	Enth Btu/lb	Efficiency
Inlet	513,598	1.4		80.7	
Disch	513,598	50.0		80.9	65%

Fluid Power	1.150E+05	Btuh
	34	kW

Deaerator	Flow	Press	Temp	Enth	Heat
Cond In	256,798	34.7	214.8	183.0	4.699E+07
Steam In	9,571	34.7	258.8	1,167.0	1.117E+07
Makeup	-	34.7	50.0	18.2	0.000E+00
Blowdown	-	34.7		1,164.0	0.000E+00
Drain	266,370	29.7	249.8	218.3	5.816E+07

Feedpump	Flow	Press	Enth	Efficiency
Inlet	238,407	29.7	218.3	
Disch Lo	21,320	447.7	220.2	70%
Disch Hi	217,092	1,550.8	224.7	75%

Fluid Power	1.426E+06	Btuh
	418	kW

Heat Balance - Arrangement C

GE PG6101FA Gas Turbine for Unit 3 Without Duct Firing

North Bangkok Thermal
Case: 90 deg F, 70% RH, Unfired

PLANT DESCRIPTION	
Gas Turbines	GE PG6101FA
Number of GT/WHB Units	2
NOx Control	Dry Low
Steam Turbine	Reheat
Number of Steam Turbines	1

ELECTRIC SUMMARY - kW	
Gas Turbine Output	124,001
Steam Turbine Output	74,806

Gross Electric Output	198,807
Plant Auxiliaries	5,964

Net Cycle Electric Output	192,843

FUEL CONSUMPTION	
Gas Turbine - MBtuh LHV	1,308.0
Supp Firing - MBtuh LHV	0.0

Total Fuel - MBtuh LHV	1,308.0
Total Fuel - MBtuh HHV	1451.9

GAS TURBINE (Each)	
Electric Output - kW	62,001
Fuel Consumption - MBtuh	654.00
Fuel Consumption - lb/hr	30,398
Heat Rate - Btu/kWh	10,548
Exhaust Flow - lb/hr	1,509,560
Exhaust Temp - deg F	1,138
Inlet Air Temp - deg F	90
Inlet Air Humidity	70%
Evaporative Cooler	Yes
GT Inlet Loss - in water	3.0
GT Exhaust Loss- in water	15.0
Altitude - ft	0

HEAT RATES	
Gas Turbine - Btu/kWh LHV	10,548
Combined Cycle - Btu/kWh LHV	6,782

STEAM TURBINE	
Steam Turbine Throttle	
Pressure - Psig	1450.0
Temperature - deg F	1000
Flow - lb/hr	408,695
Cold Reheat	
Pressure - Psig	374
Temperature - deg F	711
Flow - lb/hr	393,437
Hot Reheat	
Pressure - Psig	350
Temperature - deg F	1000
Flow - lb/hr	439,672
Admission	
Pressure - Psig	15
Temperature - deg F	431
Flow - lb/hr	42,502
Exhaust	
Pressure - In Hg	2.71
Enthalpy - Btu/lb	1067.9
Flow - lb/hr	495,298
Generator Output	
Kilowatts	74,806
Power Factor	90.00%
kVA	83,117

WASTE HEAT BOILER	HP	RHT	IP	LP	COND HTR
Fluid	Steam	Steam	Steam	Steam	Steam
Pressure - Psig	1450	335	418	15	30
Temperature - deg F	999	1000	498	431	215
Flow - lb/hr	204,348	219,828	23,118	21,251	248,727
Blowdown - %	0.00%		0.00%	0.0%	
Heat Absorbed - MBtuh	258.7	37.02	23.6	30.8	30.7
Supp. Firing Temp - F	NA				
Stack Temp - deg F	199				

File: HBFEF6T88
Date: 7/24/00

North Bangkok Thermal
Case: 90 deg F, 70% RH, Unfired

Auxiliary Equipment

Condenser	Flow lb/hr	Press in Hg	Temp Deg F	Enth Btu/lb	Heat Flow Btu/hr
LP Exhaust	495,298			1,067.9	5.289E+08
GC Drain	1,854			180.2	3.341E+05
Reg	280			1,304.9	3.654E+05
Drain	497,432	2.71	111.5	79.5	3.953E+07
Heat Rejected					4.901E+08

Condensate Pump	Flow lb/hr	Press psia	Temp Deg F	Enth Btu/lb	Efficiency
Inlet	497,432	1.3		79.5	
Disch	497,432	50.0		79.7	65%

Fluid Power 1.114E+05 Btuh
33 kW

Deaerator	Flow	Press	Temp	Enth	Heat
Cond In	248,727	34.7	214.8	183.0	4.551E+07
Steam In	9,270	34.7	258.8	1,167.0	1.082E+07
Makeup	-	34.7	50.0	18.2	0.000E+00
Blowdown	-	34.7		1,164.0	0.000E+00
Drain	257,997	29.7	249.8	218.3	5.633E+07

Feedpump	Flow	Press	Enth	Efficiency
Inlet	227,466	29.7	218.3	
Disch Lo	23,118	447.7	220.2	70%
Disch Hi	204,341	1,550.8	224.7	75%

Fluid Power 1.346E+06 Btuh
394 kW

North Bangkok Thermal Plant
Case: 90 deg F, 70% RH, Fired

PLANT DESCRIPTION	
Gas Turbines	GE PG6101FA
Number of GT/WHB Units	2
NOx Control	Dry Low
Steam Turbine	Reheat
Number of Steam Turbines	1

ELECTRIC SUMMARY - kW	
Gas Turbine Output	124,001
Steam Turbine Output	88,102

Gross Electric Output	212,103
Plant Auxiliaries	6,363

Net Cycle Electric Output	205,740

FUEL CONSUMPTION	
Gas Turbine - MBtuh LHV	1,308.0
Supp Firing - MBtuh LHV	117.7

Total Fuel - MBtuh LHV	1,425.7
Total Fuel - MBtuh HHV	1582.6

GAS TURBINE (Each)	
Electric Output - kW	62,001
Fuel Consumption - MBtuh	654.00
Fuel Consumption - lb/hr	30,398
Heat Rate - Btu/kWh	10,548
Exhaust Flow - lb/hr	1,509,560
Exhaust Temp - deg F	1,138
Inlet Air Temp - deg F	90
Inlet Air Humidity	70%
Evaporative Cooler	Yes
GT Inlet Loss - in water	3.0
GT Exhaust Loss- in water	15.0
Altitude - ft	0

HEAT RATES	
Gas Turbine - Btu/kWh LHV	10,548
Combined Cycle - Btu/kWh LHV	6,930

STEAM TURBINE	
Steam Turbine Throttle	
Pressure - Psig	1450.0
Temperature - deg F	1000
Flow - lb/hr	514,636
Cold Reheat	
Pressure - Psig	451
Temperature - deg F	734
Flow - lb/hr	496,156
Hot Reheat	
Pressure - Psig	420
Temperature - deg F	1000
Flow - lb/hr	527,796
Admission	
Pressure - Psig	15
Temperature - deg F	413
Flow - lb/hr	18,486
Exhaust	
Pressure - In Hg	2.99
Enthalpy - Btu/lb	1065.4
Flow - lb/hr	562,298
Generator Output	
Kilowatts	88,102
Power Factor	90.00%
kVA	97,891

WASTE HEAT BOILER	HP	RHT	IP	LP	COND HTR
Fluid	Steam	Steam	Steam	Steam	Steam
Pressure - Psig	1450	405	418	15	30
Temperature - deg F	1000	1000	498	413	215
Flow - lb/hr	257,318	263,784	15,820	9,243	282,357
Blowdown - %	0.00%		0.00%	0.0%	
Heat Absorbed - MBtuh	325.8	40.21	16.1	19.5	34.8
Supp. Firing Temp - F	1,252				
Stack Temp - deg F	189				

North Bangkok Thermal Plant
Case: 90 deg F, 70% RH, Fired

Auxiliary Equipment

Condenser	Flow lb/hr	Press in Hg	Temp Deg F	Enth Btu/lb	Heat Flow Btu/hr
LP Exhaust	562,034			1,067.4	5.999E+08
GC Drain	2,184			180.2	3.935E+05
Reg	280			1,308.9	3.665E+05
Drain	564,498	2.99	114.9	82.9	4.677E+07
Heat Rejected					5.539E+08

Condensate Pump	Flow lb/hr	Press psia	Temp Deg F	Enth Btu/lb	Efficiency
Inlet	564,498	1.5		82.9	
Disch	564,498	50.0		83.1	65%

Fluid Power	1.262E+05	Btuh
	37	kW

Deaerator	Flow	Press	Temp	Enth	Heat
Cond In	282,308	34.7	214.8	183.0	5.166E+07
Steam In	10,522	34.7	258.8	1,167.0	1.228E+07
Makeup	-	34.7	50.0	18.2	0.000E+00
Blowdown	-	34.7		1,164.0	0.000E+00
Drain	292,830	29.7	249.8	218.3	6.394E+07

Feedpump	Flow	Press	Enth	Efficiency
Inlet	273,093	29.7	218.3	kVA
Disch Lo	15,808	447.7	220.2	70%
Disch Hi	257,318	1,550.8	224.7	75%

Fluid Power	1.679E+06	Btuh
	492	kW

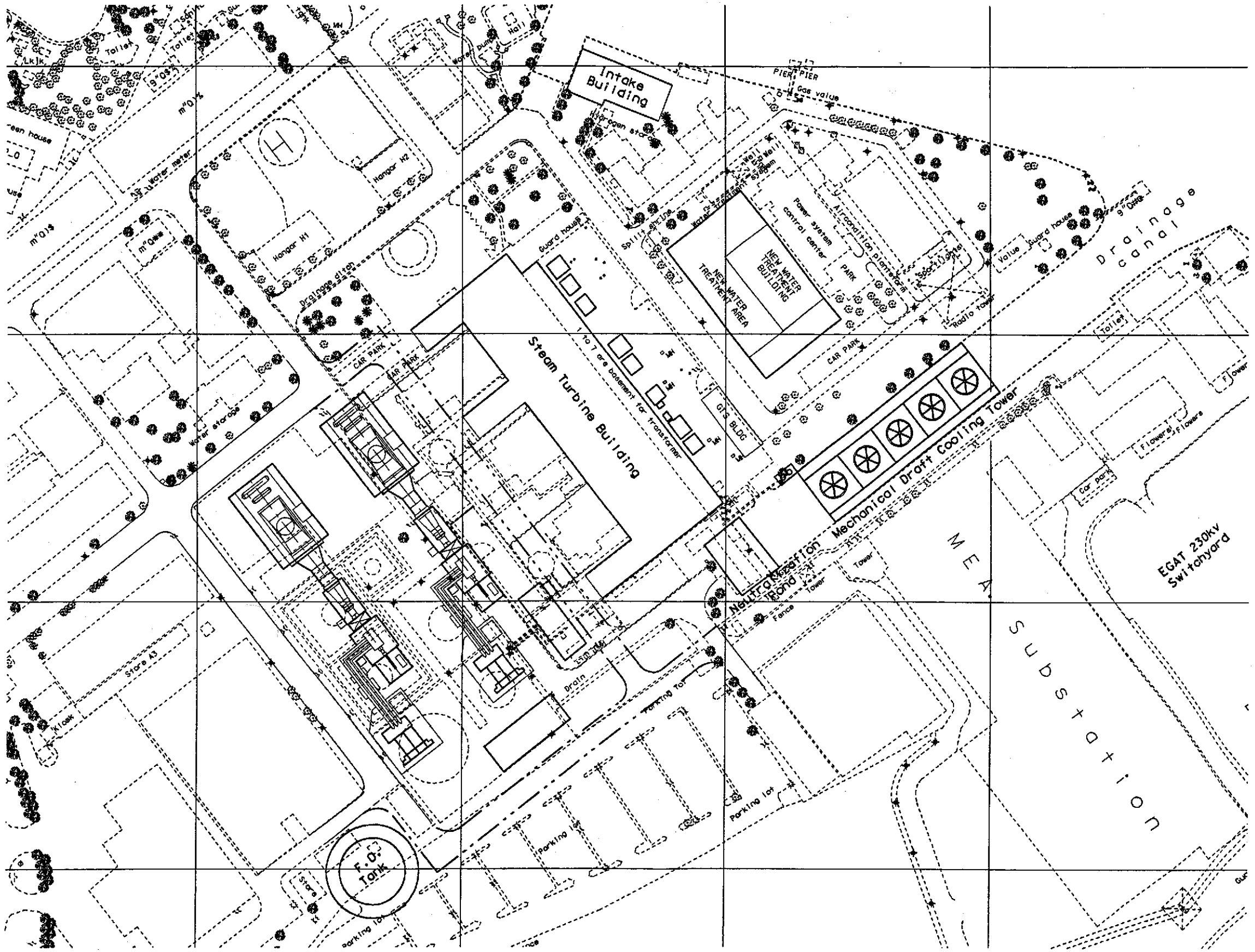

GRAPHIC SCALE

0 10 20 30 40 50

1:750
METERS

Exhibit 4-20

NOTE:
THIS IS A CONCEPTUAL DESIGN DRAWING BASED ON THE INFORMATION AVAILABLE REGARDING THE EXISTING EQUIPMENT WHICH WILL BE REUSED AND BASED ON A CONCEPTUAL DESIGN OF THE ADDITIONAL EQUIPMENT WHICH WILL BE REQUIRED FOR THE REPOWERING PROJECT. ITS PURPOSE IS TO SERVE AS THE BASIS FOR THE BUDGETARY COST ESTIMATE AND THE PREPARATION OF TECHNICAL SPECIFICATION AND TENDER DOCUMENTS.

Rev No	Revision	Date	Dwn	Chkd	Approved Chief Engr

Drawing Control				
Purpose	Approved By	Date	Released By	Date
For Information				
For Comment				
For Bid				
For Construction				

Engineering Review		
Disc	Engr	Date
Mech		
Elec		
Civil		
Arch		
Nuc		
Dwn YZ	Chkd	SL
Reviewed By		
Manager-Design & Drafting		

NORTH BANGKOK REPOWERING PROJECT

ARRANGEMENT "A"
2 GTG/HRSG'S WITH EXISTING 3 STG'S

BURNS AND ROE/POWER TECH ASSOCIATES
JOINT VENTURE

Approved for Construction	Date	Work Order	Drawing No	Rev
Chief MECHANICAL Engineer	Scale 1:50	2350	M210	A

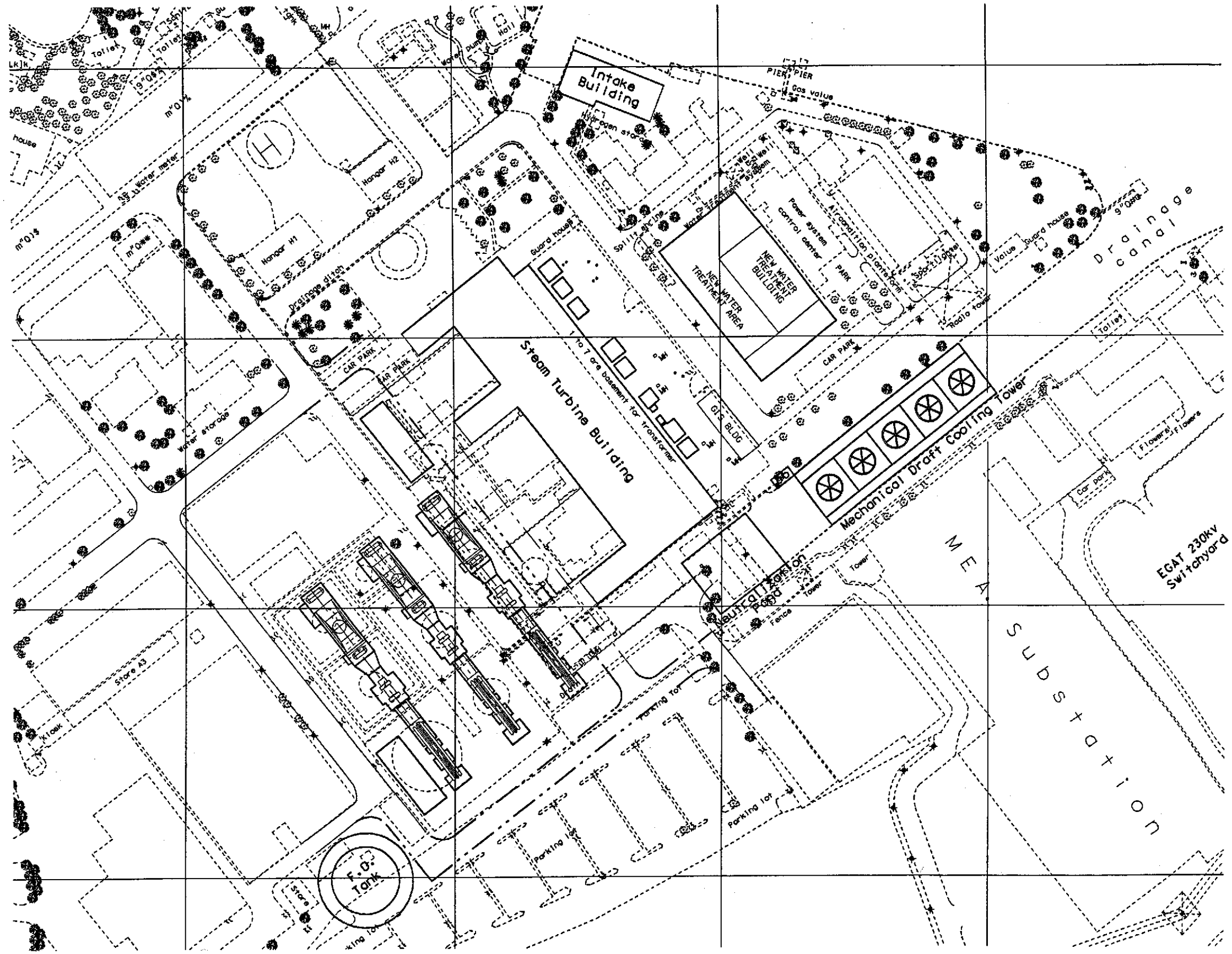

GRAPHIC SCALE

0 10 20 30 40 50

1:750
METERS

Exhibit 4-21

NOTE:
THIS IS A CONCEPTUAL DESIGN DRAWING BASED ON THE INFORMATION AVAILABLE REGARDING THE EXISTING EQUIPMENT WHICH WILL BE REUSED AND BASED ON A CONCEPTUAL DESIGN OF THE ADDITIONAL EQUIPMENT WHICH WILL BE REQUIRED FOR THE REPOWERING PROJECT. ITS PURPOSE IS TO SERVE AS THE BASIS FOR THE BUDGETARY COST ESTIMATE AND THE PREPARATION OF TECHNICAL SPECIFICATION AND TENDER DOCUMENTS.

Rev No	Revision	Date	Dwn	Chkd	Approved Chief Engr

Drawing Control				
Purpose	Approved By	Date	Released By	Date
For Information				
For Comment				
For Bid				
For Construction				

Engineering Review		
Disc	Engr	Date
Mech		
Elec		
Civil		
Arch		
Nuc		
Dwn VT	Chkd	St
Reviewed By		
Manager-Design & Drafting		

NORTH BANGKOK REPOWERING PROJECT

ARRANGEMENT "B"
3 GTG/HRSG'S WITH EXISTING 3 STG'S

BURNS AND ROE/POWER TECH ASSOCIATES
JOINT VENTURE

Approved for Construction	Date	Work Order	Drawing No	Rev
Chief MECHANICAL Engineer	Scale 750	2350	M230	A

2350-01/M230.DGN 04-17-01

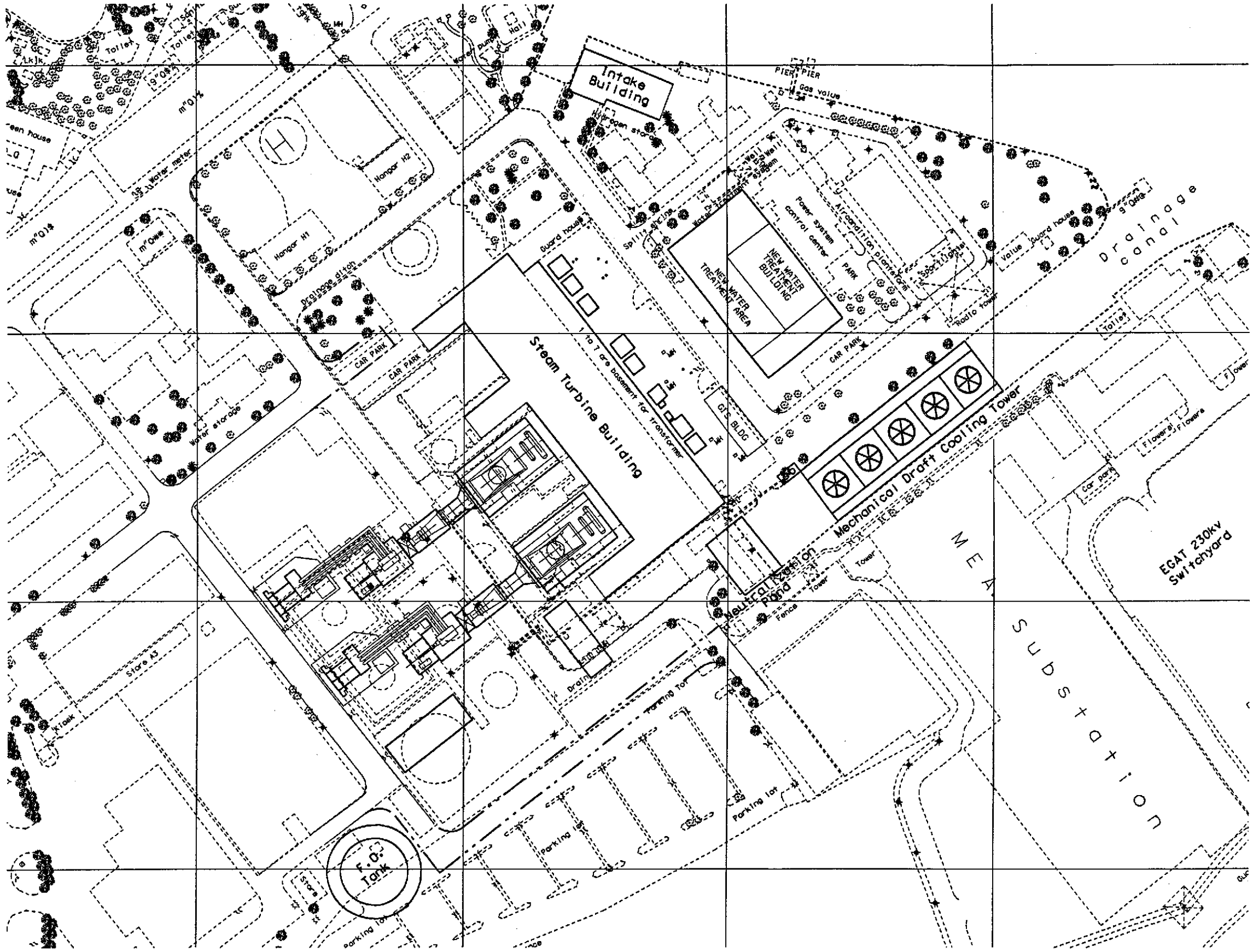

GRAPHIC SCALE

0 10 20 30 40 50

1:750 METERS

Exhibit 4-22

NOTE:
THIS IS A CONCEPTUAL DESIGN DRAWING BASED ON THE INFORMATION AVAILABLE REGARDING THE EXISTING EQUIPMENT WHICH WILL BE REUSED AND BASED ON A CONCEPTUAL DESIGN OF THE ADDITIONAL EQUIPMENT WHICH WILL BE REQUIRED FOR THE REPOWERING PROJECT. ITS PURPOSE IS TO SERVE AS THE BASIS FOR THE BUDGETARY COST ESTIMATE AND THE PREPARATION OF TECHNICAL SPECIFICATION AND TENDER DOCUMENTS.

Rev No	Revision	Date	Dwn	Chkd	Approved Chief Engr

Drawing Control				
Purpose	Approved By	Date	Released By	Date
For Information				
For Comment				
For Bid				
For Construction				

Engineering Review		
Disc	Engr	Date
Mech		
Elec		
Civil		
Arch		
Nuc		
Dwn VF	Chkd	St
Reviewed By		
Manager-Design & Drafting		

NORTH BANGKOK REPOWERING PROJECT

ARRANGEMENT "A"
2 GTG/HRSG'S WITH EXISTING 3 STG'S

BURNS AND ROE/POWER TECH ASSOCIATES JOINT VENTURE

Approved for Construction	Date	Work Order	Drawing No	Rev
Chief MECHANICAL Engineer	Scale 1:750	2350	M211	A

2350-01/M211.DGN 04-17-01

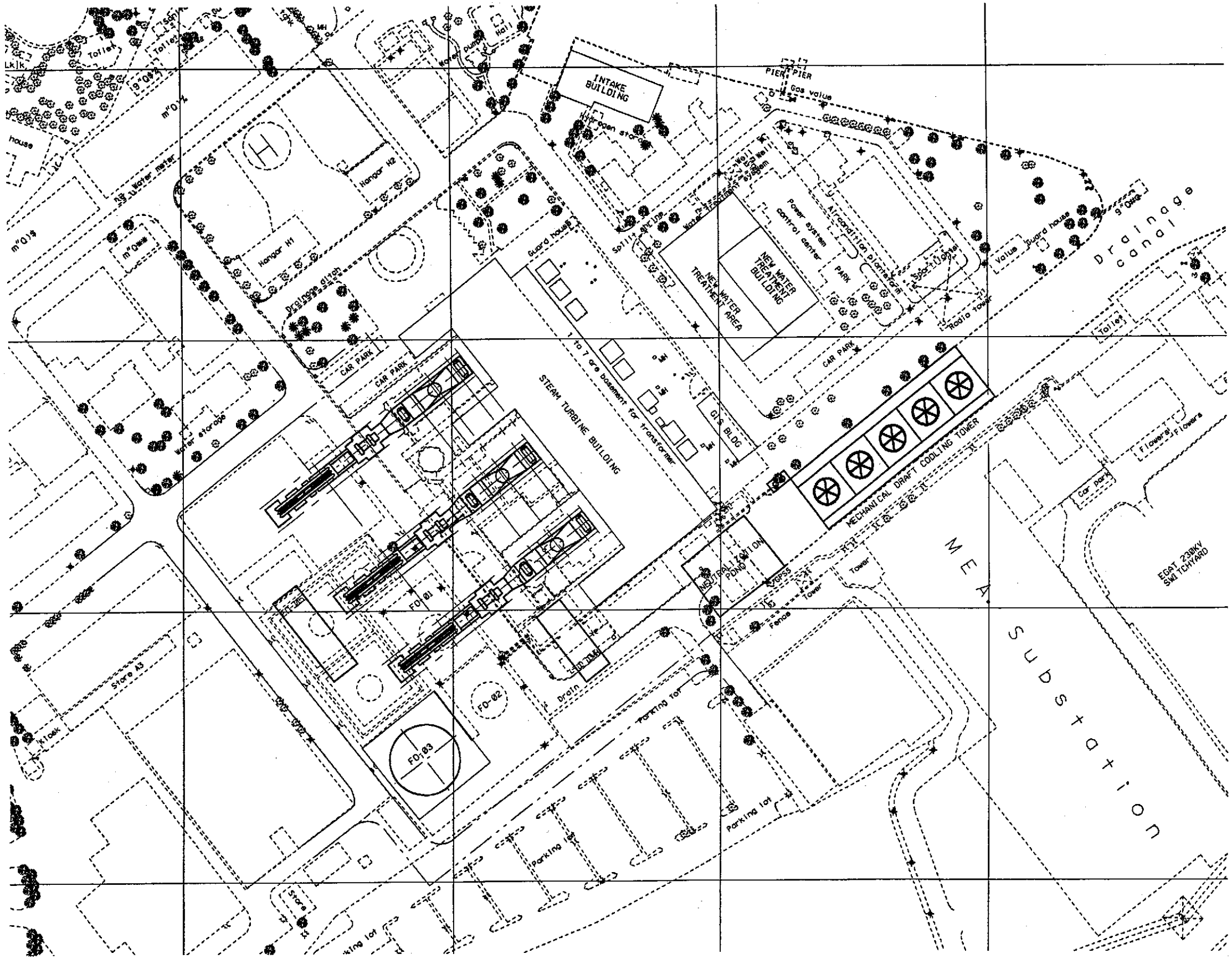

GRAPHIC SCALE

0 10 20 30 40 50

1:750 METERS

Exhibit 4-23

NOTE:
THIS IS A CONCEPTUAL DESIGN DRAWING BASED ON THE INFORMATION AVAILABLE REGARDING THE EXISTING EQUIPMENT WHICH WILL BE REUSED AND BASED ON A CONCEPTUAL DESIGN OF THE ADDITIONAL EQUIPMENT WHICH WILL BE REQUIRED FOR THE REPOWERING PROJECT. ITS PURPOSE IS TO SERVE AS THE BASIS FOR THE BUDGETARY COST ESTIMATE AND THE PREPARATION OF TECHNICAL SPECIFICATION AND TENDER DOCUMENTS.

Rev No	Revision	Date	Dwn	Chkd	Approved Chief Engr

Drawing Control

Purpose	Approved By	Date	Released By	Date
For Information				
For Comment				
For Bid				
For Construction				

Engineering Review

Disc.	Engr.	Date
Mech.		
Elec		
Civil		
Arch		
Nuc.		
Dwn VZ	Chkd	St

Reviewed By
Manager-Design & Drafting

NORTH BANGKOK REPOWERING PROJECT

GENERAL ARRANGEMENT
3 GTG/HRSG'S WITH EXISTING 3 STG'S

BURNS AND ROE/POWER TECH ASSOCIATES
JOINT VENTURE

Approved for Construction
Chief MECHANICAL Engineer

Date
Scale 750M

Work Order	Drawing No	Rev
2350	M232	A

2350-01/M232.DGN 04-17-01

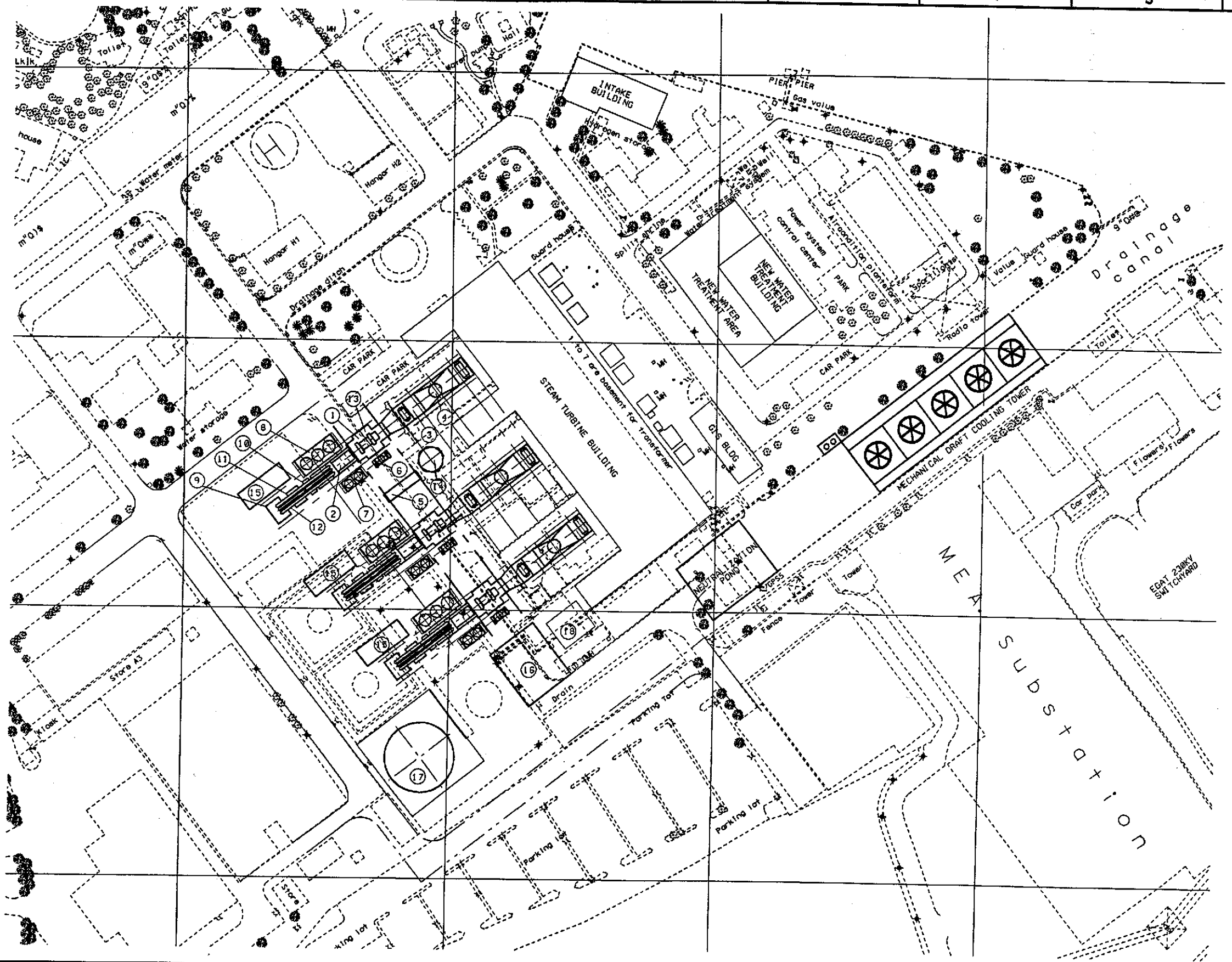

LEGEND:

1. COMBUSTION TURBINE
2. COMBUSTION TURBINE GENERATOR
3. HEAT RECOVERY STEAM GENERATOR
4. STACK
5. CRANE
6. GAS TURBINE COOLING AIR COOLER
7. GTG LUBE OIL COOLER
8. GENERATOR COOLING WATER COOLER
9. CTG MAIN TRANSFORMER
10. CTG GENERATOR BREAKER
11. CTG AUXILIARY TRANSFORMER
12. ISOLATED PHASE BUS DUCT
13. AIR INLET FILTER HOUSE
14. CONDENSATE STORAGE TANK
15. CTG ELECTRICAL BUILDING
16. CTG CONTROL BUILDING
17. FUEL OIL STORAGE TANK
18. HYDROGEN AND CO2 GAS STORAGE BLDG

GRAPHIC SCALE

0 10 20 30 40 50

1:750 METERS

Exhibit 5-2

NOTE:
THIS IS A CONCEPTUAL DESIGN DRAWING BASED ON THE INFORMATION AVAILABLE REGARDING THE EXISTING EQUIPMENT WHICH WILL BE REUSED AND BASED ON A CONCEPTUAL DESIGN OF THE ADDITIONAL EQUIPMENT WHICH WILL BE REQUIRED FOR THE REPOWERING PROJECT. ITS PURPOSE IS TO SERVE AS THE BASIS FOR THE BUDGETARY COST ESTIMATE AND THE PREPARATION OF TECHNICAL SPECIFICATION AND TENDER DOCUMENTS.

Rev No	Revision	Date	Dwn	Chkd	Approved Chief Engr

Drawing Control				
Purpose	Approved By	Date	Released By	Date
For Information				
For Comment				
For Bid				
For Construction				

Engineering Review		
Disc	Engr	Date
Mech		
Elec		
Civil		
Arch		
Nuc		
Dwn YZ	Chkd	SL
Reviewed By		
Manager-Design & Drafting		

NORTH BANGKOK REPOWERING PROJECT

GENERAL ARRANGEMENT
3 GTG/HRSG'S WITH EXISTING 3 STG'S

BURNS AND ROE/POWER TECH ASSOCIATES JOINT VENTURE

Approved for Construction	Date	Work Order	Drawing No	Rev
Chief MECHANICAL Engineer	Scale 750:1	2350	M231	A

NOTES

1. ALL CIRCUIT BREAKERS ARE RATED 230KV, 1200 AMP, 50HZ EXCEPT AS NOTED.
2. THE SWITCHYARD WILL BE FURNISHED COMPLETE WITH CONTROL SYSTEM HARDWARE AND SOFTWARE, METERING AND RELAYING PANELS.
3. THE TWO INTERCONNECTION LINES WITH EGAT 230KV SUBSTATION WILL BE FURNISHED WITH REVENUE METERING PANELS.
4. THE SWITCHYARD WILL BE INDOOR, TYPE GIS SUPPLIED COMPLETE WITH ASSOCIATED BUILDING.
5. THE SWITCHYARD WILL BE FURNISHED WITH DEDICATED AC/DC DISTRIBUTION SYSTEM.

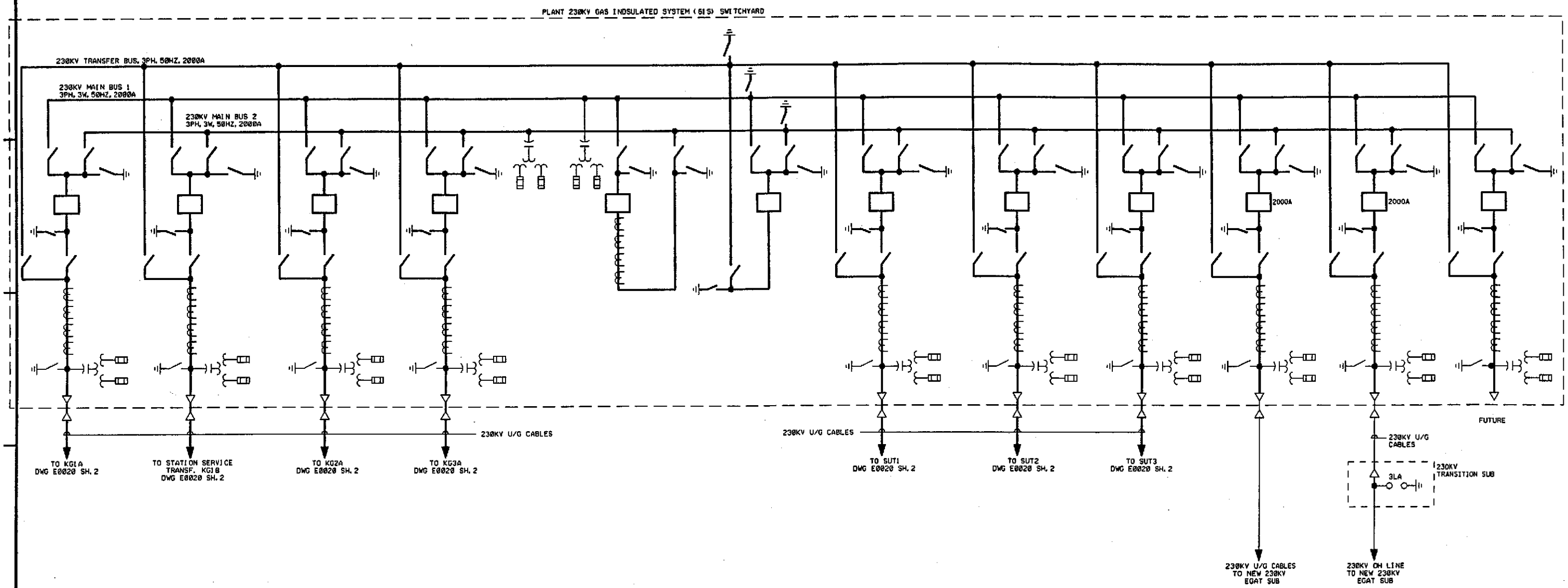

Exhibit 5 – 4 Sheet 1

NOTE:
THIS IS A CONCEPTUAL DESIGN DRAWING BASED ON THE INFORMATION AVAILABLE REGARDING THE EXISTING EQUIPMENT WHICH WILL BE REUSED AND BASED ON A CONCEPTUAL DESIGN OF THE ADDITIONAL EQUIPMENT WHICH WILL BE REQUIRED FOR THE REPOWERING PROJECT. ITS PURPOSE IS TO SERVE AS THE BASIS FOR THE BUDGETARY COST ESTIMATE AND THE PREPARATION OF TECHNICAL SPECIFICATION AND TENDER DOCUMENTS.

Rev No	Revision	Date	Dwn	Chkd	Approved Chief Engr	Rev No	Revision	Date	Dwn	Chkd	Approved Chief Engr	Rev No	Revision	Date	Dwn	Chkd	Approved Chief Engr

Drawing Control				
Purpose	Approved By	Date	Released By	Date
For Information				
For Comment				
For Bid				
For Construction				

Engineering Review		
Disc	Engr	Date
Mech		
Elec		
Civil		
Arch		
Instr		
Dwn	Chkd	SL
Reviewed By		
Manager-Design&Drafting		

NORTH BANGKOK REPOWERING PROJECT

KEY ONE LINE DIAGRAM

BURNS AND ROE/POWER TECH ASSOCIATES JOINT VENTURE

Approved for Construction | Date
Chief ELECTRICAL Engineer | Scale NONE

Work Order	Drawing No	Sh	Rev
2350	E0020	1	0

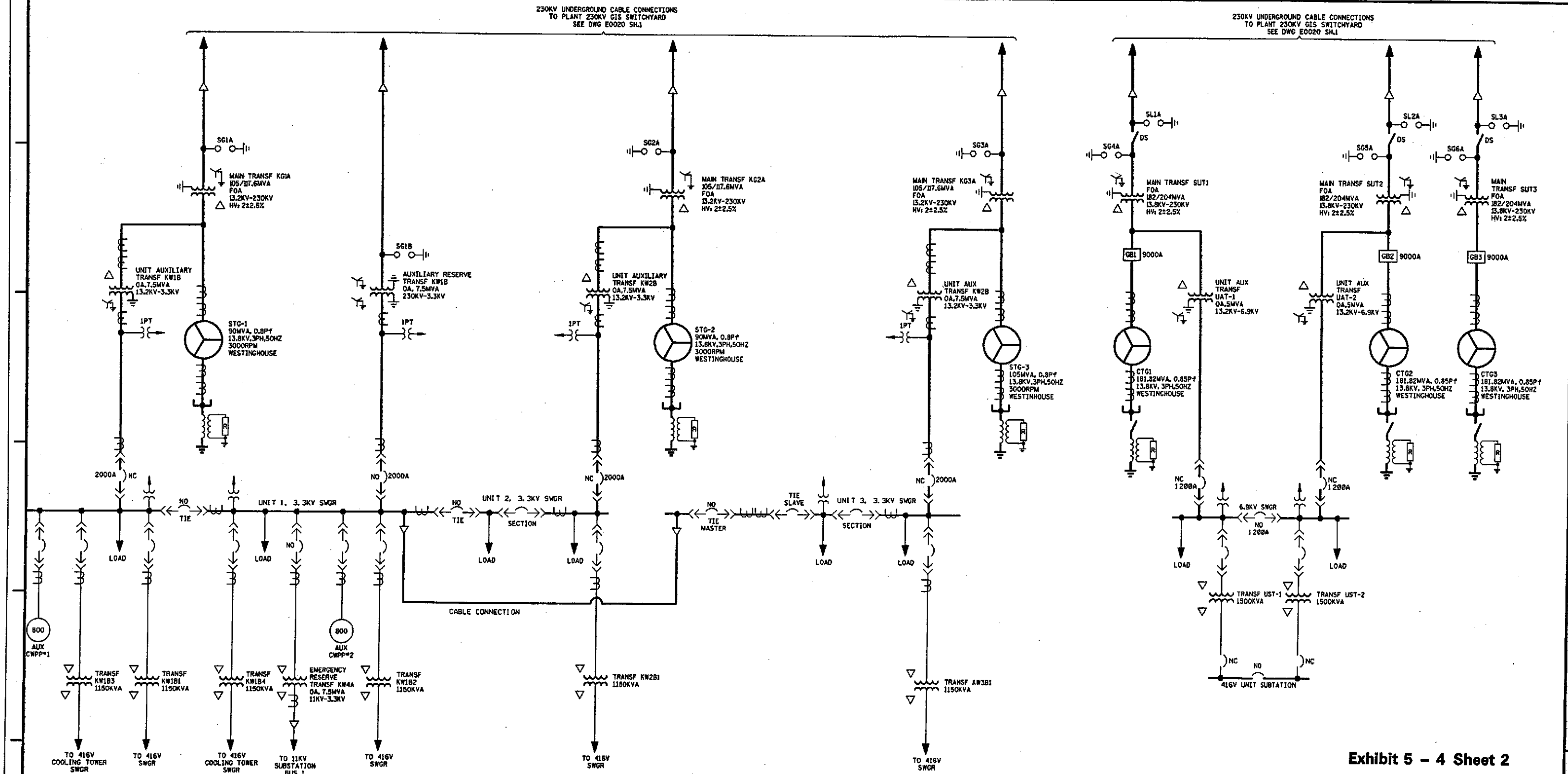

Exhibit 5 – 4 Sheet 2

NOTE:
THIS IS A CONCEPTUAL DESIGN DRAWING BASED ON THE INFORMATION AVAILABLE REGARDING THE EXISTING EQUIPMENT WHICH WILL BE REUSED AND BASED ON A CONCEPTUAL DESIGN OF THE ADDITIONAL EQUIPMENT WHICH WILL BE REQUIRED FOR THE REPOWERING PROJECT. ITS PURPOSE IS TO SERVE AS THE BASIS FOR THE BUDGETARY COST ESTIMATE AND THE PREPARATION OF TECHNICAL SPECIFICATION AND TENDER DOCUMENTS.

Rev No	Revision	Date	Dwn	Chkd	Approved Chief Engr	Rev No	Revision	Date	Dwn	Chkd	Approved Chief Engr	Rev No	Revision	Date	Dwn	Chkd	Approved Chief Engr

Drawing Control

Purpose	Approved By	Date	Released By	Date
For Information				
For Comment				
For Bid				
For Construction				

Engineering Review

Disc	Engr	Date
Mech		
Elec		
Civil		
Arch		
Instr		
Dwn MM	Chkd	SL

Reviewed By
Manager-Design&Drafting

NORTH BANGKOK REPOWERING PROJECT

KEY ONE LINE DIAGRAM

BURNS AND ROE/POWER TECH ASSOCIATES
JOINT VENTURE

Approved for Construction
Chief ELECTRICAL Engineer

Date
Scale NONE

Work Order	Drawing No	Sh	Rev
2350	E0020	2	A

23E0020SH2.DGN

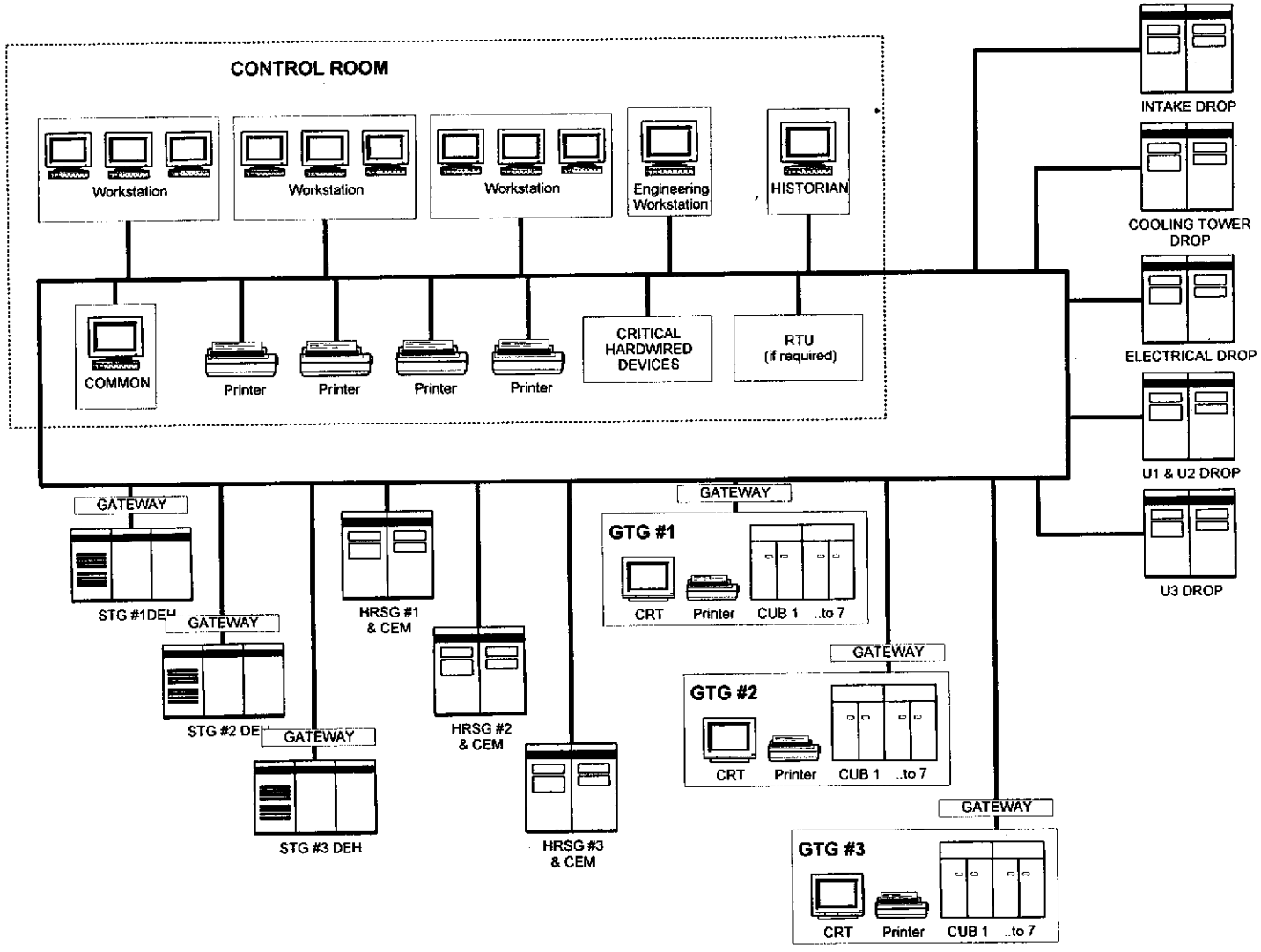

Exhibit 5-5

BLOCK DIAGRAM – CONTROLS AND INSTRUMENTS

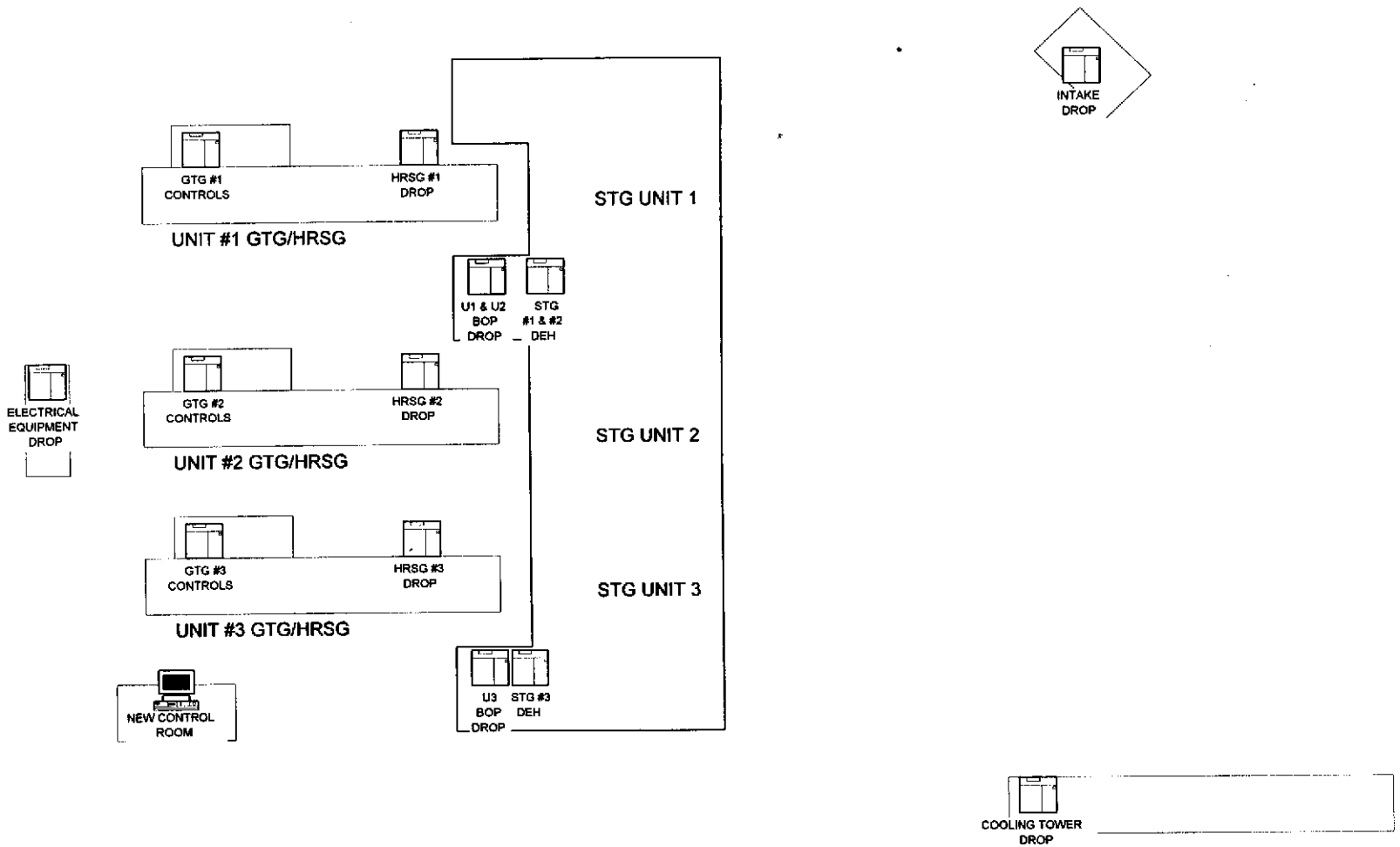

Exhibit 5-6

CONTROL SYSTEM ARRANGEMENT

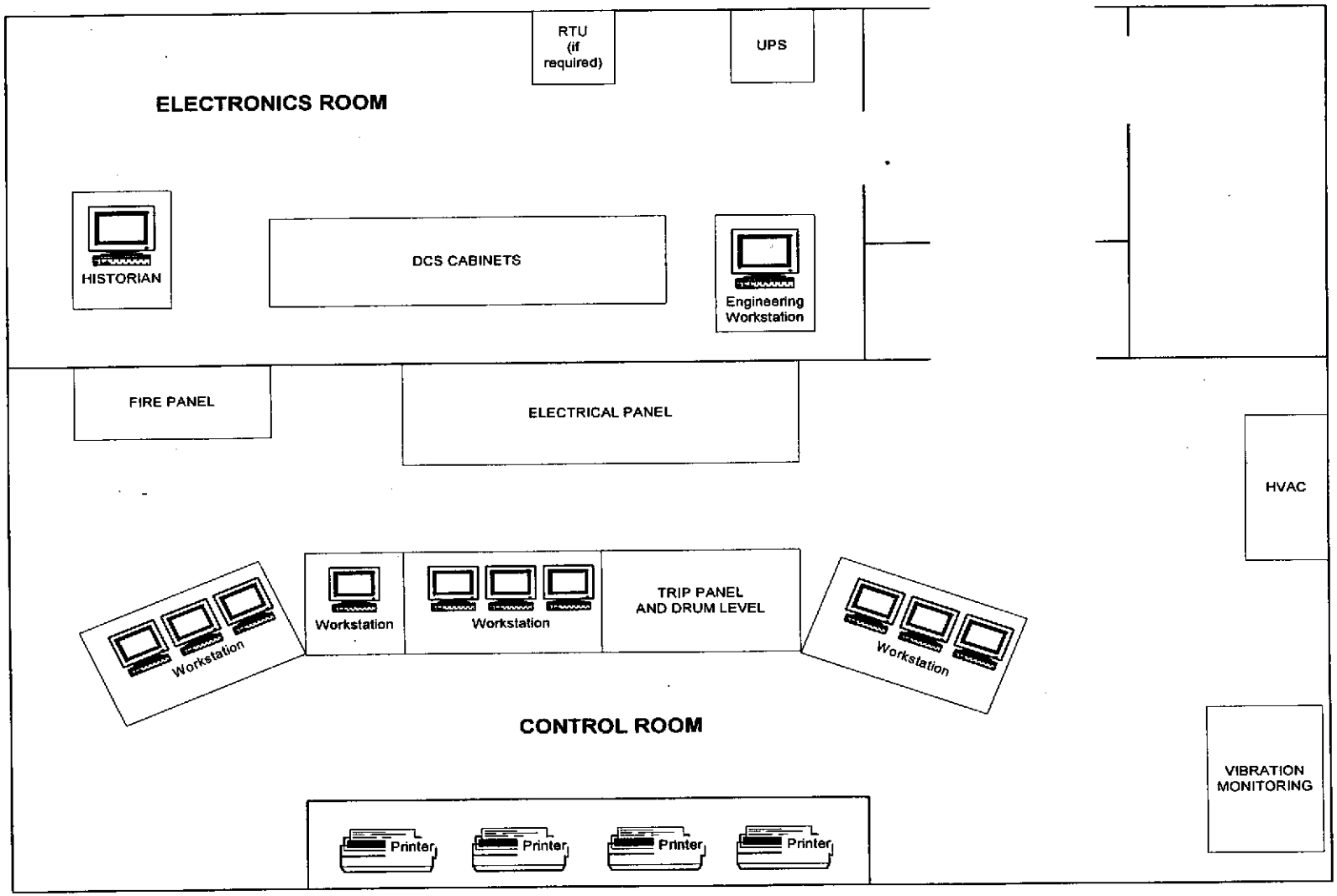

Exhibit 5-7

LAYOUT OF CONTROL ROOM

Plant W converted to N Bangkok

CABINET		AI	AO	TC	DI	DO	PI	SOE	
HRSG1		79	21	60	275	137	0	0	
HRSG2		79	21	60	275	137	0	0	
HRSG3		79	21	60	275	137	0	0	
stmTURB 1		32	12	12	133	59	0	0	
stmTURB 2		32	12	12	133	59	0	0	
stmTURB 3		32	12	12	133	59	0	0	
C/turb 1,2,3	M5								
CTwr		11	3	0	96	35	0	0	
BOP		34	11	3	281	51	13	30	
Electrical	in BOP								
Intake		34	11	3	281	51	13	30	
		412	124	222	1882	725	26	60	3451

Plant C converted to N Bangkok

CABINET		AI	AO	TC	DI	DO	PI	SOE	
HRSG1		141	40	108	150	91	0	0	
HRSG2		141	40	108	150	91	0	0	
HRSG3		141	40	108	150	91	0	0	
stmTURB 1	dpu5	15	12	10	35	15	0	3	
stmTURB 2		15	12	10	35	15	0	3	
stmTURB 3		15	12	10	35	15	0	3	
C/turb 1,2,3	unknown								
CTwr	dpu1	4	0	104	216	58		116	
BOP	dpu2	96	32	40	132	68		24	
Electrical	dpu3	56	12	24	136	116		50	
Intake	dpu4	96	32	40	136	68		24	
		720	232	562	1175	628	0	223	3540

North Bangkok

CABINET	AI	AO	TC	DI	DO	PI	SOE	
HRSG1	110	31	84	213	114	0	0	
HRSG2	110	31	84	213	114	0	0	
HRSG3	110	31	84	213	114	0	0	
S/T1	24	12	11	84	37	0	1.5	
S/T2	24	12	11	84	37	0	1.5	
S/T3	24	12	11	84	37	0	1.5	
C/turb 1,2,3								
cooling twr	23	7	15	89	31	2	19	
intake	20	6	13	77	27	2	16	
U1&U2BOP	66	20	43	256	89	5	55	
U3BOP	33	10	21	128	45	3	27	
Electrical	23	7	15	89	31	2	19	
	566	178	392	1529	677	13	142	3496

Table 5-8
I/O Estimate

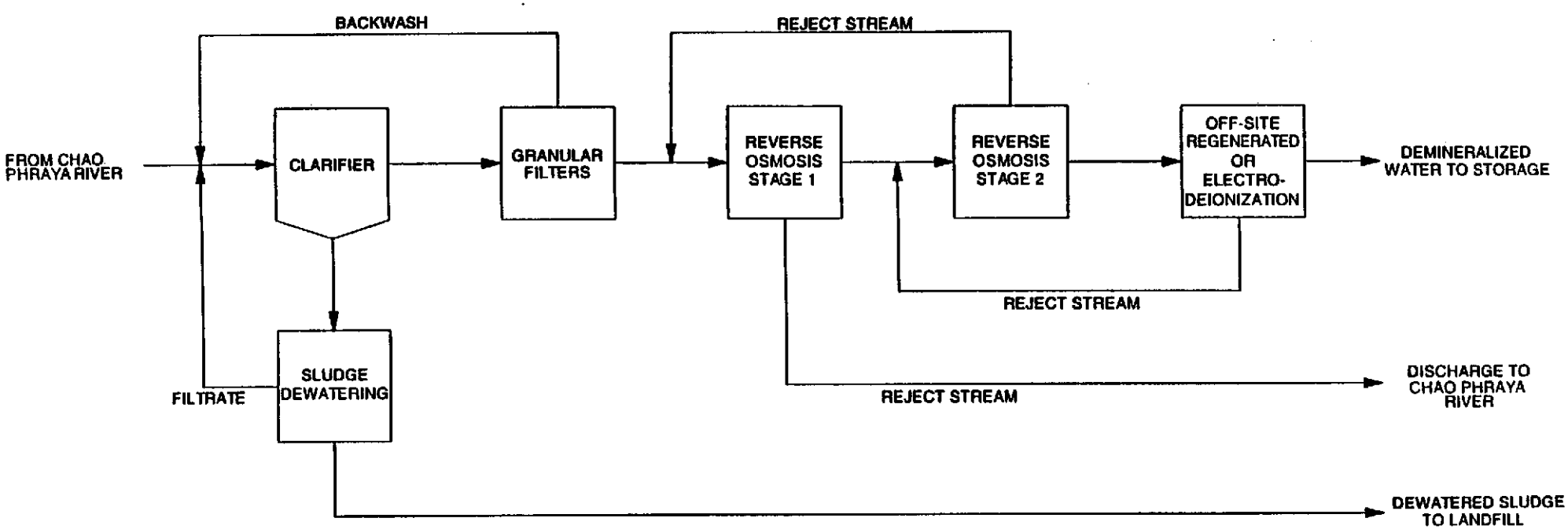

Exhibit 5-9

FLOW DIAGRAM NEW WATER TREATMENT SYSTEM

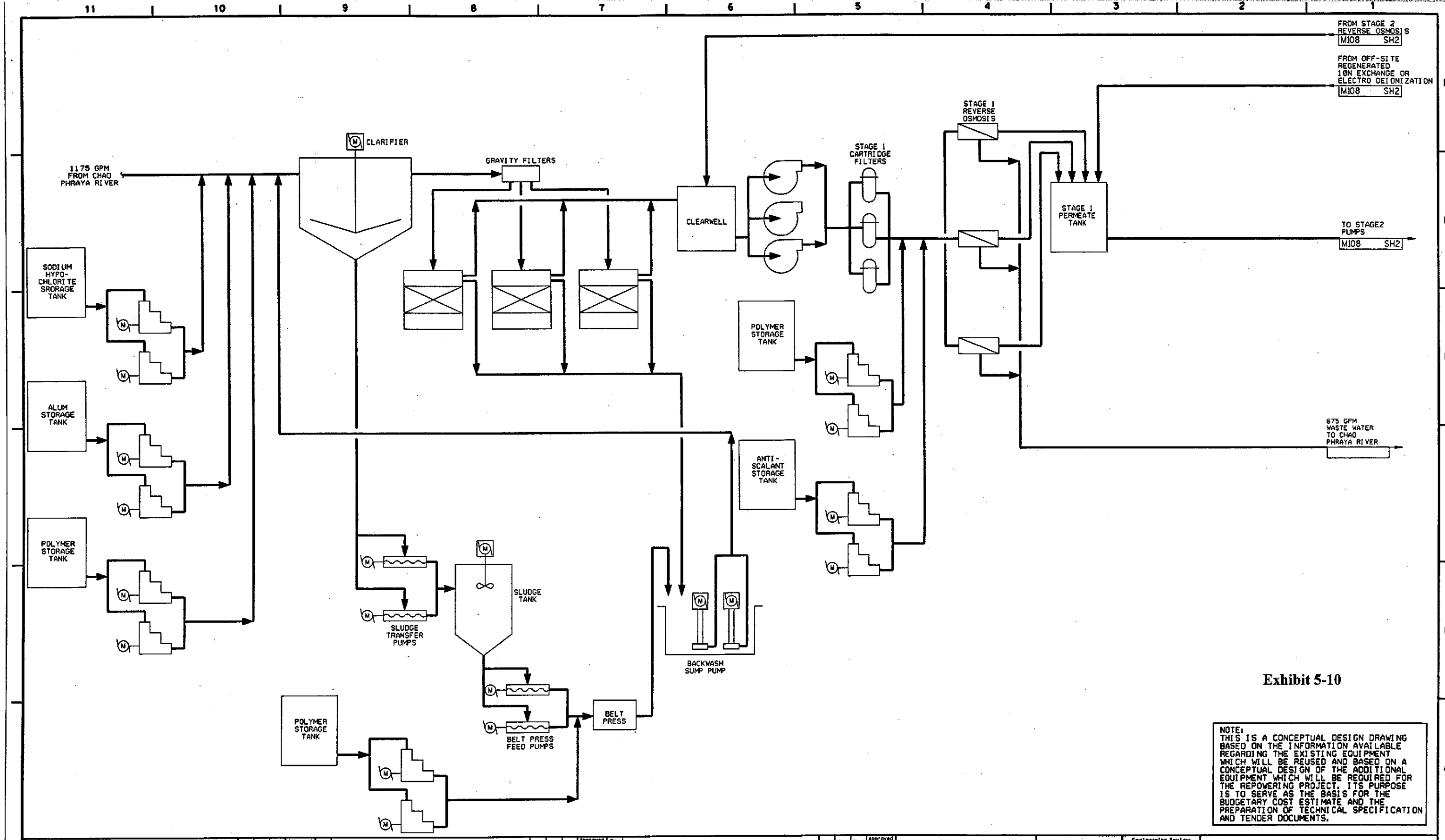

Exhibit 5-10

NOTE:
THIS IS A CONCEPTUAL DESIGN DRAWING BASED ON THE INFORMATION AVAILABLE REGARDING THE EXISTING EQUIPMENT WHICH WILL BE REUSED AND BASED ON A CONCEPTUAL DESIGN OF THE ADDITIONAL EQUIPMENT WHICH WILL BE REQUIRED FOR THE REPOWERING PROJECT. ITS PURPOSE IS TO SERVE AS THE BASIS FOR THE BUDGETARY COST ESTIMATE AND THE PREPARATION OF TECHNICAL SPECIFICATION AND TENDER DOCUMENTS.

Rev No	Revision	Date	Dwn	Chkd	Approved Chief Engr	Rev No	Revision	Date	Dwn	Chkd	Approved Chief Engr	Rev No	Revision	Date	Dwn	Chkd	Approved Chief Engr

Drawing Control				
Purpose	Approved By	Date	Released By	Date
For Information				
For Comment				
For Bid				
For Construction				

Engineering Review		
Disc	Engr	Date
Mech		
Elec		
Civil		
Arch		
Instr		
Dwn TT	Chkd	SL
Reviewed By		
Manager-Design&Drafting		

NORTH BANGKOK REPOWERING PROJECT

PIPING AND INSTRUMENTATION DIAGRAM
DEMINERALIZED WATER TREATMENT SYSTEM

BURNS AND ROE/POWER TECH ASSOCIATES
JOINT VENTURE

Approved for Construction — Date
Chief MECHANICAL Engineer — Scale

Work Order	Drawing No	Sh	Rev
2350	M108	1 OF 2	A

2350-01/M108SH1.DGN 12-26-00

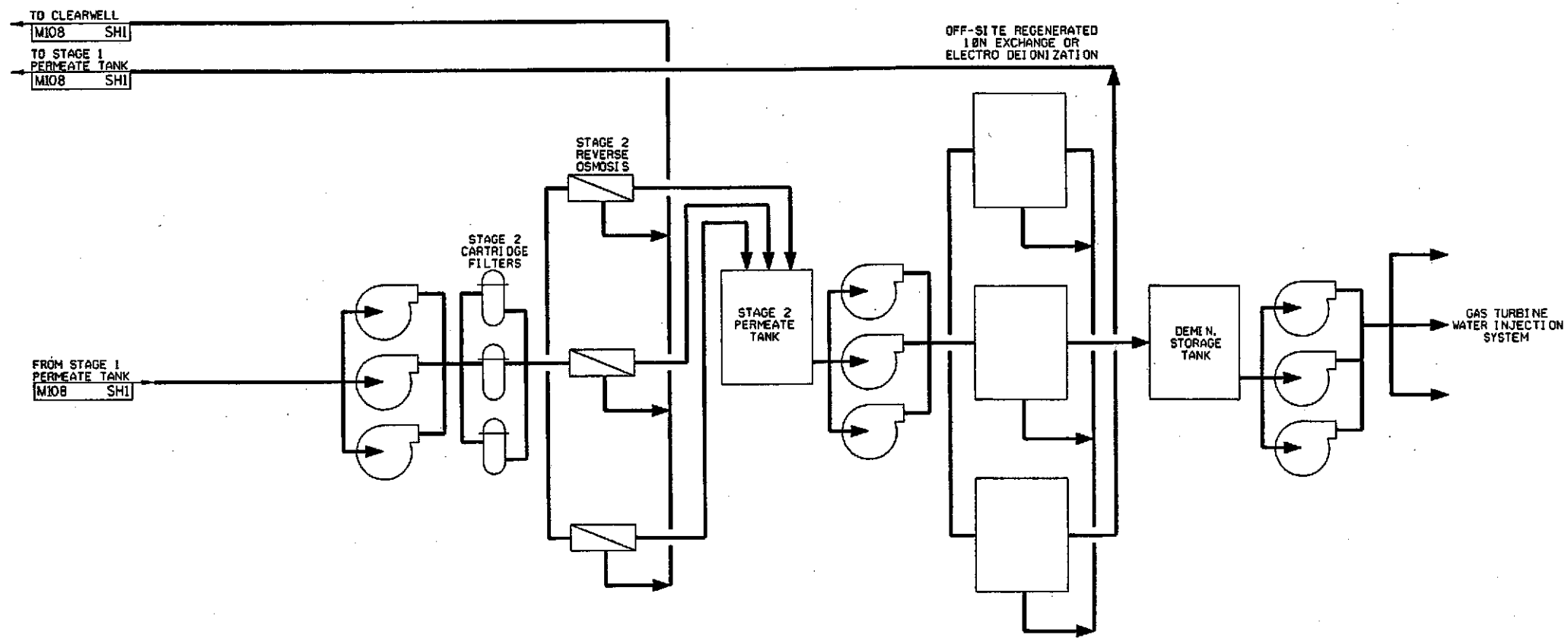

Exhibit 5-11

NOTE:
THIS IS A CONCEPTUAL DESIGN DRAWING BASED ON THE INFORMATION AVAILABLE REGARDING THE EXISTING EQUIPMENT WHICH WILL BE REUSED AND BASED ON A CONCEPTUAL DESIGN OF THE ADDITIONAL EQUIPMENT WHICH WILL BE REQUIRED FOR THE REPOWERING PROJECT. ITS PURPOSE IS TO SERVE AS THE BASIS FOR THE BUDGETARY COST ESTIMATE AND THE PREPARATION OF TECHNICAL SPECIFICATION AND TENDER DOCUMENTS.

Rev No	Revision	Date	Dwn	Chkd	Approved Chief Engr	Rev No	Revision	Date	Dwn	Chkd	Approved Chief Engr	Rev No	Revision	Date	Dwn	Chkd	Approved Chief Engr

Drawing Control				
Purpose	Approved By	Date	Released By	Date
For Information				
For Comment				
For Bid				
For Construction				

Engineering Review		
Disc	Engr	Date
Mech		
Elec		
Civil		
Arch		
Instr		
Dwn VJ	Chkd	SC
Reviewed By		
Manager-Design&Drafting		

NORTH BANGKOK REPOWERING PROJECT

PIPING AND INSTRUMENTATION DIAGRAM
DEMINERALIZED WATER TREATMENT SYSTEM

BURNS AND ROE/POWER TECH ASSOCIATES JOINT VENTURE

Approved for Construction	Date	Work Order	Drawing No	Sh	Rev
Chief MECHANICAL Engineer	Scale	2350	M108	2 OF 2	A

2350-01/M108SH2.DGN 12-26-00

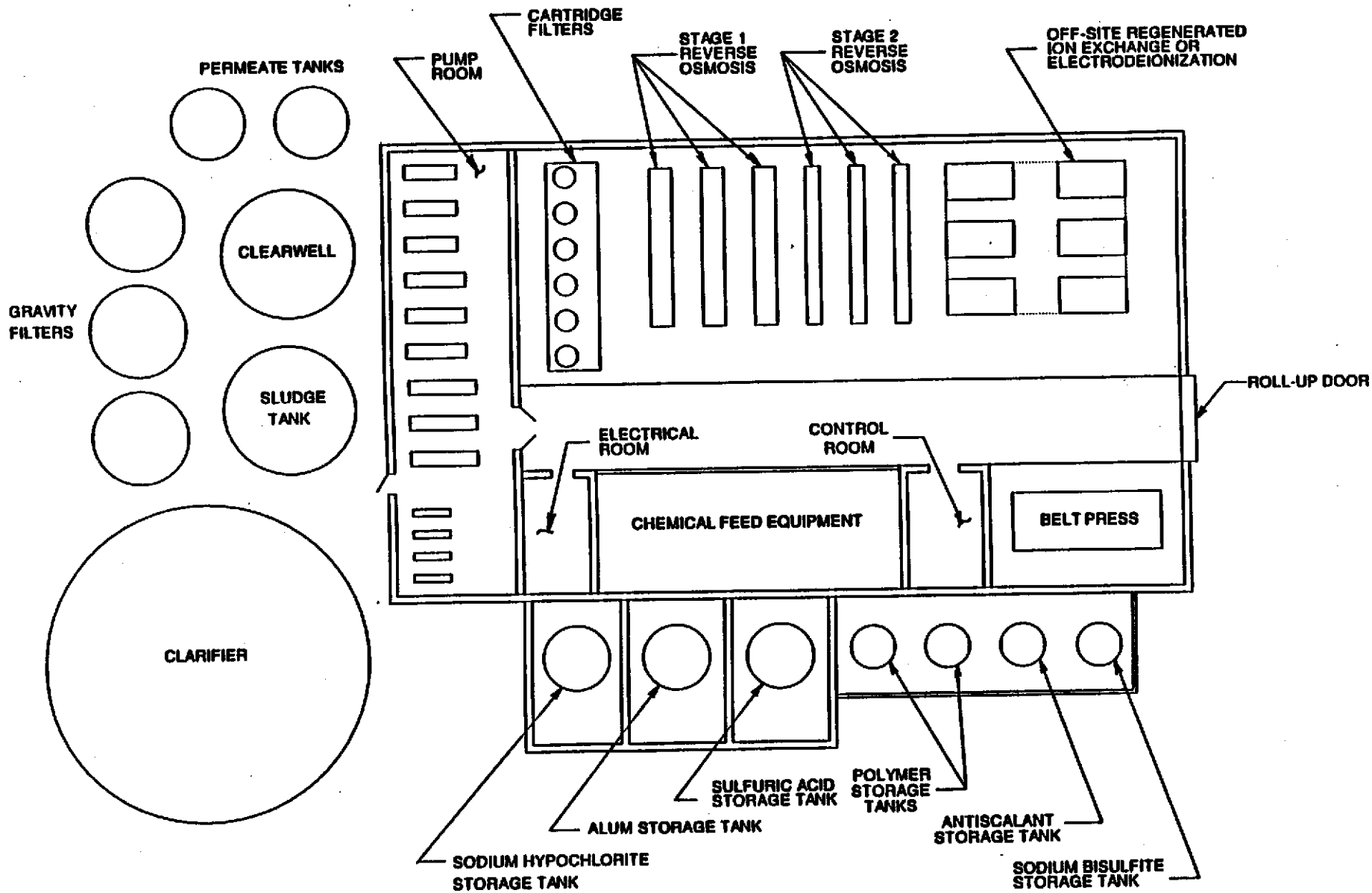

Exhibit 5-12

ARRANGEMENT OF NEW WATER TREATMENT PLANT

NORTH BANGKOK THERMAL PLANT
Case: 90 deg F, 70% RH, Fired

File: HBMW701SFT75C
Date: 12/20/00

PLANT DESCRIPTION	
Gas Turbines	MW 701D
Number of GT/WHB Units	1
NOx Control	Water Inj
Steam Turbine	Reheat
Number of Steam Turbines	1

ELECTRIC SUMMARY - kW	
Gas Turbine Output	127,796
Steam Turbine Output	75,032

Gross Electric Output	202,829
Plant Auxiliaries	6,085

Net Cycle Electric Output	196,744

FUEL CONSUMPTION	
Gas Turbine - MBtuh LHV	1,386.8
Supp Firing - MBtuh LHV	88.1

Total Fuel - MBtuh LHV	1,474.9
Total Fuel - MBtuh HHV	1637.2

GAS TURBINE (Each)	
Electric Output - kW	127,796
Fuel Consumption - MBtuh	1386.78
Fuel Consumption - lb/hr	80,189
Heat Rate - Btu/kWh	10,852
Exhaust Flow - lb/hr	3,421,339
Exhaust Temp - deg F	988
Inlet Air Temp - deg F	90
Inlet Air Humidity	70%
Water Injection Flow - lb/hr	80,189
Evaporative Cooler	No
GT Inlet Loss - in water	3.3
GT Exhaust Loss- in water	15.0
Altitude - ft	0

HEAT RATES	
Gas Turbine - Btu/kWh LHV	10,852
Combined Cycle - Btu/kWh LHV	7,497

STEAM TURBINE	
Steam Turbine Throttle	
Pressure - Psig	1450.0
Temperature - deg F	976
Flow - lb/hr	407,964
Cold Reheat	
Pressure - Psig	441
Temperature - deg F	720
Flow - lb/hr	392,529
Hot Reheat	
Pressure - Psig	396
Temperature - deg F	993
Flow - lb/hr	458,445
Admission	
Pressure - Psig	17.1
Temperature - deg F	391
Flow - lb/hr	56,316
Exhaust	
Pressure - In Hg	2.7
Enthalpy - Btu/lb	1069.2
Flow - lb/hr	528,970
Generator Output	
Kilowatts	75,032
Power Factor	90.00%
kVa	83,369

WASTE HEAT BOILER	HP	RHT	IP	LP	COND HTR
Fluid	Steam	Steam	Steam	Steam	Steam
Pressure - Psig	1450	396	418	20	30
Temperature - deg F	976	993	498	391	215
Flow - lb/hr	407,964	458,425	65,916	56,316	530,196
Blowdown - %	0.00%		0.00%	0.00%	
Heat Absorbed - MBtuh	510.8	76.48	67.2	75.9	53.8
Supp. Firing Temp - F	1,063				
Stack Temp - deg F	227				

NORTH BANGKOK THERMAL PLANT
Case: 90 deg F, 70% RH, Fired

File: HBMW701SFT75C
Date: 12/20/00

Auxiliary Equipment

Condenser	Flow lb/hr	Press in Hg	Temp Deg F	Enth Btu/lb	Heat Flow Btu/hr
LP Exhaust	528,970			1,069.2	5.656E+08
GC Drain	945			180.2	1.703E+05
Reg	280			1,309.8	3.667E+05
Drain	530,196	2.67	111.0	78.9	4.186E+07
Heat Rejected					5.242E+08

Condensate Pump	Flow lb/hr	Press psia	Temp Deg F	Enth Btu/lb	Efficiency
Inlet	530,196	1.3		78.9	
Disch	530,196	50.0		79.2	65%

Fluid Power 1.188E+05 Btuh
35 kW

Deaerator	Flow	Press	Temp	Enth	Heat
Cond In	530,196	34.7	214.8	183.0	9.702E+07
Steam In	19,707	39.7	266.8	1,169.6	2.305E+07
Makeup	-	34.7	50.0	18.2	0.000E+00
Blowdown	-	34.7		1,164.0	0.000E+00
Drain	549,903	29.7	249.8	218.3	1.201E+08

Feedpump	Flow	Press	Enth	Efficiency
Inlet	473,882	29.7	218.3	
Disch Lo	65,916	447.7	220.2	70%
Disch Hi	407,967	1,550.8	224.7	75%

Fluid Power 2.727E+06 Btuh
799 kW

NORTH BANGKOK THERMAL PLANT
Case: 90 deg F, 70% RH, Fired

File: HBMW701SFT88C
Date: 12/20/00

PLANT DESCRIPTION	
Gas Turbines	MW 701D
Number of GT/WHB Units	1
NOx Control	Water Inj
Steam Turbine	Reheat
Number of Steam Turbines	1

ELECTRIC SUMMARY - kW	
Gas Turbine Output	127,796
Steam Turbine Output	88,124

Gross Electric Output	215,920
Plant Auxiliaries	6,478

Net Cycle Electric Output	209,443

FUEL CONSUMPTION	
Gas Turbine - MBtuh LHV	1,386.8
Supp Firing - MBtuh LHV	180.8

Total Fuel - MBtuh LHV	1,567.5
Total Fuel - MBtuh HHV	1740.0

GAS TURBINE (Each)	
Electric Output - kW	127,796
Fuel Consumption - MBtuh	1386.78
Fuel Consumption - lb/hr	80,189
Heat Rate - Btu/kWh	10,852
Exhaust Flow - lb/hr	3,421,339
Exhaust Temp - deg F	988
Inlet Air Temp - deg F	90
Inlet Air Humidity	70%
Water Injection Flow - lb/hr	80,189
Evaporative Cooler	No
GT Inlet Loss - in water	3.3
GT Exhaust Loss- in water	15.0
Altitude - ft	0

HEAT RATES	
Gas Turbine - Btu/kWh LHV	10,852
Combined Cycle - Btu/kWh LHV	7,484

STEAM TURBINE	
Steam Turbine Throttle	
Pressure - Psig	1450.0
Temperature - deg F	1020
Flow - lb/hr	451,682
Cold Reheat	
Pressure - Psig	441
Temperature - deg F	755
Flow - lb/hr	434,332
Hot Reheat	
Pressure - Psig	396
Temperature - deg F	1026
Flow - lb/hr	511,518
Admission	
Pressure - Psig	18.7
Temperature - deg F	404
Flow - lb/hr	46,065
Exhaust	
Pressure - In Hg	3.0
Enthalpy - Btu/lb	1060.6
Flow - lb/hr	572,528
Generator Output	
Kilowatts	88,124
Power Factor	90.00%
kVa	97,915

WASTE HEAT BOILER	HP	RHT	IP	LP	COND HTR
Fluid	Steam	Steam	Steam	Steam	Steam
Pressure - Psig	1450	396	418	20	35
Temperature - deg F	1020	1026	500	404	212
Flow - lb/hr	451,682	511,527	62,607	46,065	574,925
Blowdown - %	0.00%		0.00%	0.00%	
Heat Absorbed - MBtuh	573.2	100.83	63.3	73.5	53.3
Supp. Firing Temp - F	1,140				
Stack Temp - deg F	227				

NORTH BANGKOK THERMAL PLANT
Case: 90 deg F, 70% RH, Fired

File: HBMW701SFT88C
Date: 12/20/00

Auxiliary Equipment

Condenser	Flow lb/hr	Press in Hg	Temp Deg F	Enth Btu/lb	Heat Flow Btu/hr
LP Exhaust	572,528			1,060.6	6.072E+08
GC Drain	2,124			180.2	3.828E+05
Reg	280			1,322.9	3.704E+05
Drain	574,932	2.98	114.9	82.8	4.763E+07
Heat Rejected					5.604E+08

Condensate Pump	Flow lb/hr	Press psia	Temp Deg F	Enth Btu/lb	Efficiency
Inlet	574,932	1.5		82.8	
Disch	574,932	50.0		83.1	65%

Fluid Power 1.285E+05 Btuh
38 kW

Deaerator	Flow	Press	Temp	Enth	Heat
Cond In	574,925	39.7	212.4	180.7	1.039E+08
Steam In	28,590	39.7	266.8	1,169.6	3.344E+07
Makeup	-	39.7	50.0	18.2	0.000E+00
Blowdown	-	39.7		1,167.0	0.000E+00
Drain	603,515	34.7	258.8	227.5	1.373E+08

Feedpump	Flow	Press	Enth	Efficiency
Inlet	528,867	34.7	227.5	
Disch Lo	77,185	447.7	229.4	70%
Disch Hi	451,682	1,550.8	233.9	75%

Fluid Power 3.029E+06 Btuh
888 kW

NORTH BANGKOK THERMAL PLANT
Case: 90 deg F, 70% RH, Unfired

File: HBMW701T75C
Date: 12/20/00

PLANT DESCRIPTION	
Gas Turbines	MW 701D
Number of GT/WHB Units	1
NOx Control	Water Inj
Steam Turbine	Reheat
Number of Steam Turbines	1

ELECTRIC SUMMARY - kW	
Gas Turbine Output	127,796
Steam Turbine Output	63,894

Gross Electric Output	191,690
Plant Auxiliaries	5,751

Net Cycle Electric Output	185,940

FUEL CONSUMPTION	
Gas Turbine - MBtuh LHV	1,386.8
Supp Firing - MBtuh LHV	0.0

Total Fuel - MBtuh LHV	1,386.8
Total Fuel - MBtuh HHV	1539.3

GAS TURBINE (Each)	
Electric Output - kW	127,796
Fuel Consumption - MBtuh	1386.78
Fuel Consumption - lb/hr	80,189
Heat Rate - Btu/kWh	10,852
Exhaust Flow - lb/hr	3,421,339
Exhaust Temp - deg F	988
Inlet Air Temp - deg F	90
Inlet Air Humidity	70%
Water Injection Flow - lb/hr	80,189
Evaporative Cooler	No
GT Inlet Loss - in water	3.3
GT Exhaust Loss- in water	15.0
Altitude - ft	0

HEAT RATES	
Gas Turbine - Btu/kWh LHV	10,852
Combined Cycle - Btu/kWh LHV	7,458

STEAM TURBINE	
Steam Turbine Throttle	
Pressure - Psig	1450.0
Temperature - deg F	919
Flow - lb/hr	350,222
Cold Reheat	
Pressure - Psig	381
Temperature - deg F	652
Flow - lb/hr	336,502
Hot Reheat	
Pressure - Psig	342
Temperature - deg F	932
Flow - lb/hr	407,808
Admission	
Pressure - Psig	14.2
Temperature - deg F	378
Flow - lb/hr	69,753
Exhaust	
Pressure - In Hg	2.9
Enthalpy - Btu/lb	1064.0
Flow - lb/hr	490,136
Generator Output	
Kilowatts	63,894
Power Factor	90.00%
kVa	70,993

WASTE HEAT BOILER	HP	RHT	IP	LP	COND HTR
Fluid	Steam	Steam	Steam	Steam	Steam
Pressure - Psig	1450	342	418	20	30
Temperature - deg F	919	932	495	378	222
Flow - lb/hr	350,222	407,802	71,307	69,753	491,281
Blowdown - %	0.00%		0.00%	0.00%	
Heat Absorbed - MBtuh	426.5	68.91	72.5	84.3	52.2
Supp. Firing Temp - F	980				
Stack Temp - deg F	230				

NORTH BANGKOK THERMAL PLANT
Case: 90 deg F, 70% RH, Unfired

File: HBMW701T75C
Date: 12/20/00

Auxiliary Equipment

Condenser	Flow lb/hr	Press in Hg	Temp Deg F	Enth Btu/lb	Heat Flow Btu/hr
LP Exhaust	490,136			1,064.0	5.215E+08
GC Drain	866			180.2	1.560E+05
Reg	280			1,284.9	3.598E+05
Drain	491,282	2.85	113.3	81.3	3.992E+07
Heat Rejected					4.821E+08

Condensate Pump	Flow lb/hr	Press psia	Temp Deg F	Enth Btu/lb	Efficiency
Inlet	491,282	1.4		81.3	
Disch	491,282	50.0		81.5	65%

Fluid Power 1.099E+05 Btuh
32 kW

Deaerator	Flow	Press	Temp	Enth	Heat
Cond In	491,281	34.7	221.5	189.8	9.326E+07
Steam In	14,727	39.7	266.8	1,169.6	1.722E+07
Makeup	-	34.7	50.0	18.2	0.000E+00
Blowdown	-	34.7		1,164.0	0.000E+00
Drain	506,008	29.7	249.8	218.3	1.105E+08

Feedpump	Flow	Press	Enth	Efficiency
Inlet	421,527	29.7	218.3	
Disch Lo	71,307	447.7	220.2	70%
Disch Hi	350,220	1,550.8	224.7	75%

Fluid Power 2.368E+06 Btuh
694 kW

NORTH BANGKOK THERMAL PLANT
Case: 90 deg F, 70% RH, Unfired

File: HBMW701T88C
Date: 12/20/00

PLANT DESCRIPTION	
Gas Turbines	MW 701D
Number of GT/WHB Units	1
NOx Control	Water Inj
Steam Turbine	Reheat
Number of Steam Turbines	1

ELECTRIC SUMMARY - kW	
Gas Turbine Output	127,796
Steam Turbine Output	66,105

Gross Electric Output	193,901
Plant Auxiliaries	5,817

Net Cycle Electric Output	188,084

FUEL CONSUMPTION	
Gas Turbine - MBtuh LHV	1,386.8
Supp Firing - MBtuh LHV	0.0

Total Fuel - MBtuh LHV	1,386.8
Total Fuel - MBtuh HHV	1539.3

GAS TURBINE (Each)	
Electric Output - kW	127,796
Fuel Consumption - MBtuh	1386.78
Fuel Consumption - lb/hr	80,189
Heat Rate - Btu/kWh	10,852
Exhaust Flow - lb/hr	3,421,339
Exhaust Temp - deg F	988
Inlet Air Temp - deg F	90
Inlet Air Humidity	70%
Water Injection Flow - lb/hr	80,189
Evaporative Cooler	No
GT Inlet Loss - in water	3.3
GT Exhaust Loss- in water	15.0
Altitude - ft	0

HEAT RATES	
Gas Turbine - Btu/kWh LHV	10,852
Combined Cycle - Btu/kWh LHV	7,373

STEAM TURBINE	
Steam Turbine Throttle	
Pressure - Psig	1450.0
Temperature - deg F	918
Flow - lb/hr	347,285
Cold Reheat	
Pressure - Psig	334
Temperature - deg F	629
Flow - lb/hr	333,418
Hot Reheat	
Pressure - Psig	299
Temperature - deg F	931
Flow - lb/hr	405,018
Admission	
Pressure - Psig	13.0
Temperature - deg F	377
Flow - lb/hr	70,870
Exhaust	
Pressure - In Hg	2.9
Enthalpy - Btu/lb	1051.4
Flow - lb/hr	487,733
Generator Output	
Kilowatts	66,105
Power Factor	90.00%
kVa	73,450

WASTE HEAT BOILER	HP	RHT	IP	LP	COND HTR
Fluid	Steam	Steam	Steam	Steam	Steam
Pressure - Psig	1450	299	418	20	30
Temperature - deg F	918	931	495	377	223
Flow - lb/hr	347,285	405,017	71,600	70,870	489,755
Blowdown - %	0.00%		0.00%	0.00%	
Heat Absorbed - MBtuh	422.6	71.93	72.8	84.8	51.5
Supp. Firing Temp - F	980				
Stack Temp - deg F	231				

NORTH BANGKOK THERMAL PLANT
Case: 90 deg F, 70% RH, Unfired

File: HBMW701T75C
Date: 12/20/00

Auxiliary Equipment

Condenser	Flow lb/hr	Press in Hg	Temp Deg F	Enth Btu/lb	Heat Flow Btu/hr
LP Exhaust	487,733			1,051.4	5.128E+08
GC Drain	1,742			180.2	3.139E+05
Reg	280			1,280.3	3.585E+05
Drain	489,755	2.85	113.3	81.3	3.979E+07
Heat Rejected					4.737E+08

Condensate Pump	Flow lb/hr	Press psia	Temp Deg F	Enth Btu/lb	Efficiency
Inlet	489,755	1.4		81.3	
Disch	489,755	50.0		81.5	65%

Fluid Power 1.096E+05 Btuh
32 kW

Deaerator	Flow	Press	Temp	Enth	Heat
Cond In	489,755	34.7	222.7	191.0	9.353E+07
Steam In	14,090	39.7	266.8	1,169.6	1.648E+07
Makeup	-	34.7	50.0	18.2	0.000E+00
Blowdown	-	34.7		1,164.0	0.000E+00
Drain	503,845	29.7	249.8	218.3	1.100E+08

Feedpump	Flow	Press	Enth	Efficiency
Inlet	418,886	29.7	218.3	
Disch Lo	71,600	447.7	220.2	70%
Disch Hi	347,287	1,550.8	224.7	75%

Fluid Power 2.350E+06 Btuh
689 kW

NORTH BANGKOK THERMAL PLANT
Case: 90 deg F, 70% RH, Unfired, 75% Load

File: HBM
Date:

PLANT DESCRIPTION	
Gas Turbines	MW 701D
Number of GT/WHB Units	1
NOx Control	Water Inj
Steam Turbine	Reheat
Number of Steam Turbines	1

ELECTRIC SUMMARY - kW	
Gas Turbine Output	95,847
Steam Turbine Output	56,493

Gross Electric Output	152,341
Plant Auxiliaries	4,570

Net Cycle Electric Output	147,770

FUEL CONSUMPTION	
Gas Turbine - MBtuh LHV	1,207.2
Supp Firing - MBtuh LHV	0.0

Total Fuel - MBtuh LHV	1,207.2
Total Fuel - MBtuh HHV	1340.0

GAS TURBINE (Each)	
Electric Output - kW	95,847
Fuel Consumption - MBtuh	1207.19
Fuel Consumption - lb/hr	69,804
Heat Rate - Btu/kWh	12,595
Exhaust Flow - lb/hr	3,400,569
Exhaust Temp - deg F	939
Inlet Air Temp - deg F	90
Inlet Air Humidity	70%
Water Injection Flow - lb/hr	69,804
Evaporative Cooler	No
GT Inlet Loss - in water	3.3
GT Exhaust Loss- in water	15.0
Altitude - ft	0

HEAT RATES
- Gas Turbine - Btu/kWh LHV
- Combined Cycle - Btu/kWh LHV

STEAM TURBINE
- Steam Turbine Throttle
  - Pressure - Psig
  - Temperature - deg F
  - Flow - lb/hr
- Cold Reheat
  - Pressure - Psig
  - Temperature - deg F
  - Flow - lb/hr
- Hot Reheat
  - Pressure - Psig
  - Temperature - deg F
  - Flow - lb/hr
- Admission
  - Pressure - Psig
  - Temperature - deg F
  - Flow - lb/hr
- Exhaust
  - Pressure - In Hg
  - Enthalpy - Btu/lb
  - Flow - lb/hr
- Generator Output
  - Kilowatts
  - Power Factor
  - kVa

WASTE HEAT BOILER	HP	RHT	IP	LP	COND HTR
Fluid	Steam	Steam	Steam	Steam	Steam
Pressure - Psig	1450	304	418	20	30
Temperature - deg F	881	893	493	372	225
Flow - lb/hr	307,169	369,014	74,279	77,926	459,377
Blowdown - %	0.00%		0.00%	0.00%	
Heat Absorbed - MBtuh	366.8	63.13	75.4	89.8	51.7
Supp. Firing Temp - F	930				
Stack Temp - deg F	231				

NORTH BANGKOK THERMAL PLANT
Case: 90 deg F, 70% RH, Unfired, 75% Load

File: HBMW701T75P75C
Date: 12/21/00

Auxiliary Equipment

Condenser	Flow lb/hr	Press in Hg	Temp Deg F	Enth Btu/lb	Heat Flow Btu/hr
LP Exhaust	458,290			1,058.4	4.851E+08
GC Drain	805			180.2	1.450E+05
Reg	280			1,268.5	3.552E+05
Drain	459,375	2.64	110.5	78.5	3.606E+07
Heat Rejected					4.495E+08

Condensate Pump	Flow lb/hr	Press psia	Temp Deg F	Enth Btu/lb	Efficiency
Inlet	459,375	1.3		78.5	
Disch	459,375	50.0		78.7	65%

Fluid Power 1.030E+05 Btuh
30 kW

Deaerator	Flow	Press	Temp	Enth	Heat
Cond In	459,377	34.7	225.1	193.5	8.887E+07
Steam In	12,018	39.7	266.8	1,169.6	1.406E+07
Makeup	-	34.7	50.0	18.2	0.000E+00
Blowdown	-	34.7		1,164.0	0.000E+00
Drain	471,395	29.7	249.8	218.3	1.029E+08

Feedpump	Flow	Press	Enth	Efficiency
Inlet	381,447	29.7	218.3	
Disch Lo	74,279	447.7	220.2	70%
Disch Hi	307,168	1,550.8	224.7	75%

Fluid Power 2.099E+06 Btuh
615 kW

NORTH BANGKOK THERMAL PLANT
Case: 90 deg F, 70% RH, Unfired, 75% Load

File: HBMW701T88P75C
Date: 12/21/00

PLANT DESCRIPTION	
Gas Turbines	MW 701D
Number of GT/WHB Units	1
NOx Control	Water Inj
Steam Turbine	Reheat
Number of Steam Turbines	1

ELECTRIC SUMMARY - kW	
Gas Turbine Output	95,847
Steam Turbine Output	58,539

Gross Electric Output	154,386
Plant Auxiliaries	4,632

Net Cycle Electric Output	149,755

FUEL CONSUMPTION	
Gas Turbine - MBtuh LHV	1,207.2
Supp Firing - MBtuh LHV	0.0

Total Fuel - MBtuh LHV	1,207.2
Total Fuel - MBtuh HHV	1340.0

GAS TURBINE (Each)	
Electric Output - kW	95,847
Fuel Consumption - MBtuh	1207.19
Fuel Consumption - lb/hr	69,804
Heat Rate - Btu/kWh	12,595
Exhaust Flow - lb/hr	3,400,569
Exhaust Temp - deg F	939
Inlet Air Temp - deg F	90
Inlet Air Humidity	70%
Water Injection Flow - lb/hr	69,804
Evaporative Cooler	No
GT Inlet Loss - in water	3.3
GT Exhaust Loss- in water	15.0
Altitude - ft	0

HEAT RATES	
Gas Turbine - Btu/kWh LHV	12,595
Combined Cycle - Btu/kWh LHV	8,061

STEAM TURBINE	
Steam Turbine Throttle	
Pressure - Psig	1450.0
Temperature - deg F	880
Flow - lb/hr	304,755
Cold Reheat	
Pressure - Psig	296
Temperature - deg F	584
Flow - lb/hr	292,252
Hot Reheat	
Pressure - Psig	266
Temperature - deg F	892
Flow - lb/hr	366,783
Admission	
Pressure - Psig	10.9
Temperature - deg F	371
Flow - lb/hr	78,646
Exhaust	
Pressure - In Hg	2.5
Enthalpy - Btu/lb	1045.6
Flow - lb/hr	456,048
Generator Output	
Kilowatts	58,539
Power Factor	90.00%
kVa	65,043

WASTE HEAT BOILER	HP	RHT	IP	LP	COND HTR
Fluid	Steam	Steam	Steam	Steam	Steam
Pressure - Psig	1450	266	418	20	30
Temperature - deg F	880	892	493	371	226
Flow - lb/hr	304,755	366,782	74,530	78,646	457,930
Blowdown - %	0.00%		0.00%	0.00%	
Heat Absorbed - MBtuh	363.7	65.49	75.7	90.2	51.5
Supp. Firing Temp - F	930				
Stack Temp - deg F	232				

NORTH BANGKOK THERMAL PLANT File: HBMW701T88P75C
Case: 90 deg F, 70% RH, Unfired, 75% Load Date: 12/21/00

Auxiliary Equipment

Condenser	Flow lb/hr	Press in Hg	Temp Deg F	Enth Btu/lb	Heat Flow Btu/hr
LP Exhaust	456,048			1,045.6	4.768E+08
GC Drain	1,603			180.2	2.888E+05
Reg	280			1,264.9	3.542E+05
Drain	457,931	2.53	109.1	77.1	3.529E+07
Heat Rejected					4.422E+08

Condensate Pump	Flow lb/hr	Press psia	Temp Deg F	Enth Btu/lb	Efficiency
Inlet	457,931	1.2		77.1	
Disch	457,931	50.0		77.3	65%

Fluid Power 1.027E+05 Btuh
30 kW

Deaerator	Flow	Press	Temp	Enth	Heat
Cond In	457,930	34.7	225.7	194.0	8.883E+07
Steam In	11,724	39.7	266.8	1,169.6	1.371E+07
Makeup	-	34.7	50.0	18.2	0.000E+00
Blowdown	-	34.7		1,164.0	0.000E+00
Drain	469,654	29.7	249.8	218.3	1.025E+08

Feedpump	Flow	Press	Enth	Efficiency
Inlet	379,277	29.7	218.3	
Disch Lo	74,530	447.7	220.2	70%
Disch Hi	304,747	1,550.8	224.7	75%

Fluid Power 2.084E+06 Btuh
611 kW

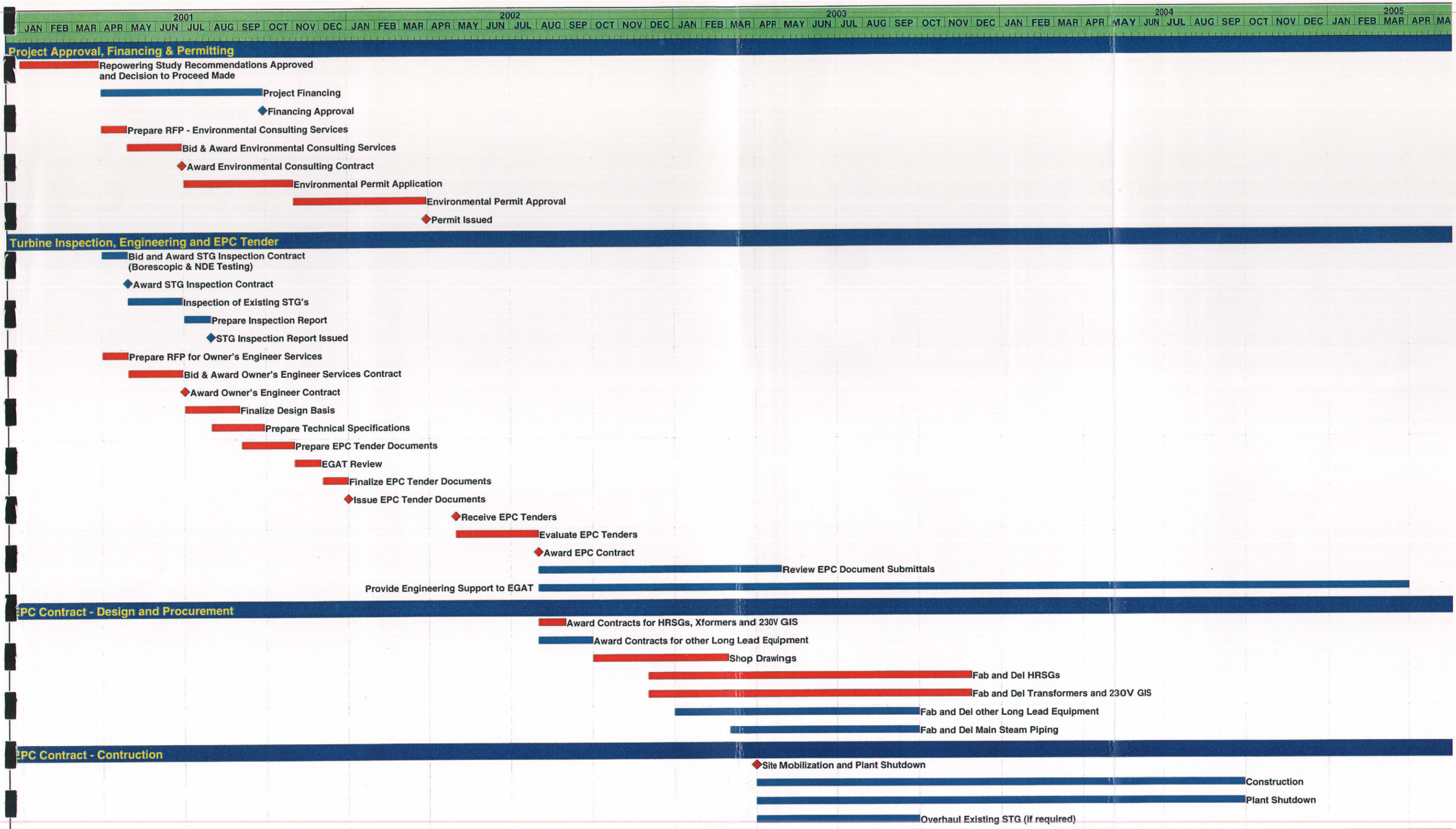

Start Date	01DEC00	Early Bar	
Finish Date	31MAR05	Progress Bar	
Data Date	01JAN01	Critical Activity	
Run Date	28DEC00 16:11		

BAN2

Sheet 1 of 2

North Bangkok Repowering Project

Milestone Schedule

Exhibit 5-19

Burns and Roe/Power Tech Assoc., JV

Date	Revision	Checked	Approved

© Primavera Systems, Inc.

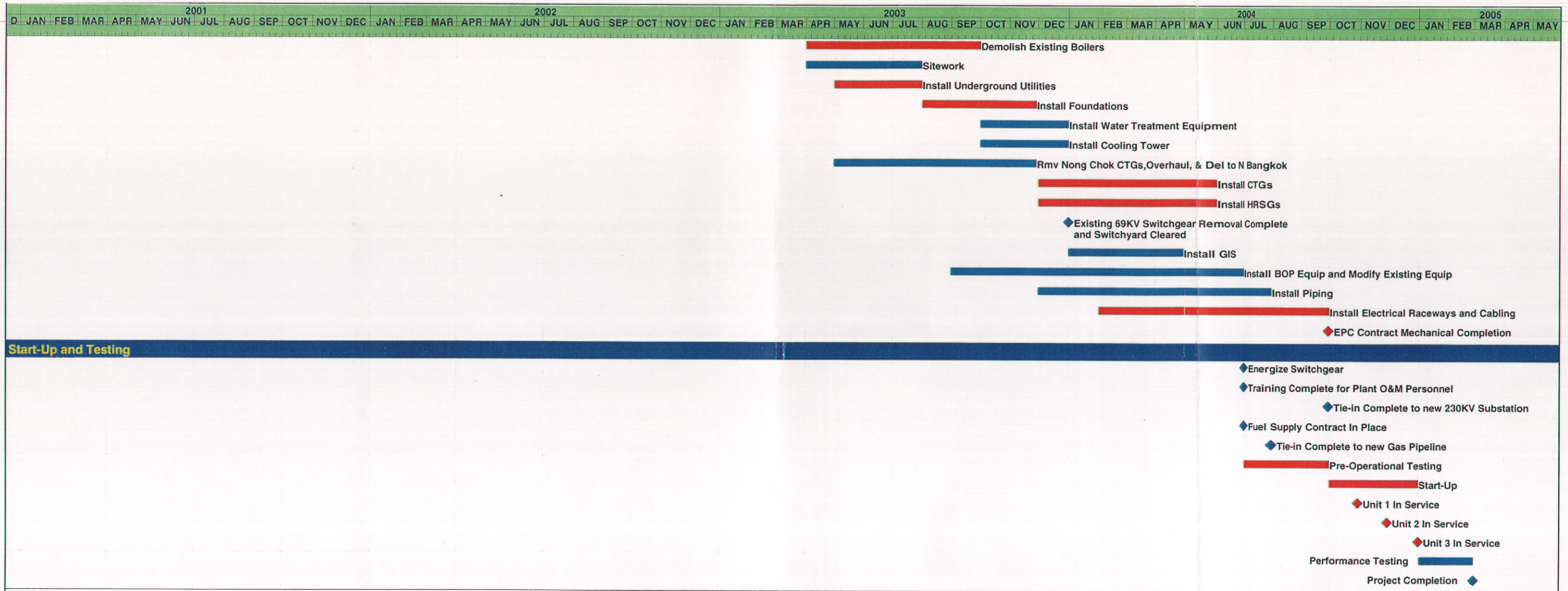

Start Date	01DEC00	Early Bar	
Finish Date	31MAR05	Progress Bar	
Data Date	01JAN01	Critical Activity	
Run Date	28DEC00 16:11		

© Primavera Systems, Inc.

BAN2

Sheet 2 of 2

North Bangkok Repowering Project

Milestone Schedule

Exhibit 5-19

Burns and Roe/Power Tech Assoc., JV

Date	Revision	Checked	Approved

Exhibit 5-20

RECOMMENDED SPARE PARTS INVENTORY

A. Gas Turbines

- Inlet air filtration system filter elements
- Combustor liners
- Transition pieces
- Fuel nozzle blocks and end caps
- Inlet guide vane bushings
- Crossfire tubes and retainers
- Combustion inspection consumables (bolts, nuts, washers, springs, o-rings, seals, gaskets, spark plugs, thermocouples, flame detectors, etc.)
- Hot gas path inspection consumables
- Rotor buckets (for each stage)
- Nozzles (for each stage)
- Shroud kits (for each stage)
- Support rings and sealing strips
- Bearing liners, tilted pads, thrust rings, etc.
- Filter and strainer elements for gas fuel, liquid fuel, lube oil, compressed air, cooling water, etc.
- Pump seal kits for liquid fuel, water injection, lube oil

B. Steam Turbines

- Main steam stop and control valve trim repair kits
- Hot reheat stop and intercept valve trim repair kits
- Gland seal packings
- Bearing liners
- Tilted pads for thrust bearings
- Rotor buckets
- Diaphragms and diaphragm packs
- Retaining strips and wires
- LP cylinder water spray nozzles
- Strainer baskets and filter cartridges (steam, lube oil, water)
- Gaskets, packing, demister pads, insulation, bushings, springs, fasteners, etc.

C. Electric Generators and Excitors

- Load gear internals
- Excitor overhaul kit
- Bearing liners
- Hydrogen seals
- Brushes and brush rigging
- Spare rotor coils
- Bushings and insulators

D. Balance of Plant Spares

- Pump bearing liners and tilting pads
- Pump seals
- B.F. pump spare rotor
- Pump spare impeller and diffuser
- Pump wear rings
- Fire protection spares (detectors, gas sensors, smoke detectors, relays, alarms, etc.)
- Electrical consumables (fuses, lamps, contacts, insulators, relays, switches, cables, CTs, PTs, resistors, capacitors, batteries, rectifiers, etc.)
- Spare switchgear and MCC units
- Auxiliary cooling tower fill
- Auxiliary cooling tower fan blades and gear box
- Travelling water screen (mesh, sprockets, chain, etc.)
- Instrument and control consumables (thermocouples, RTD, gauges, switches, transducers, etc.)
- Air cooled exchanger fan blades and gear boxes
- Reverse osmosis cartridges
- Clarifier blades, bushings, bearings
- Repair kits for valves, control valves, actuators, dampers and damper drives, etc.
- Miscellaneous steam traps, strainers, valves, gaskets, fasteners, etc.
- HRSG level gauges, valves, accessories
- Safety and relief valve overhaul kits

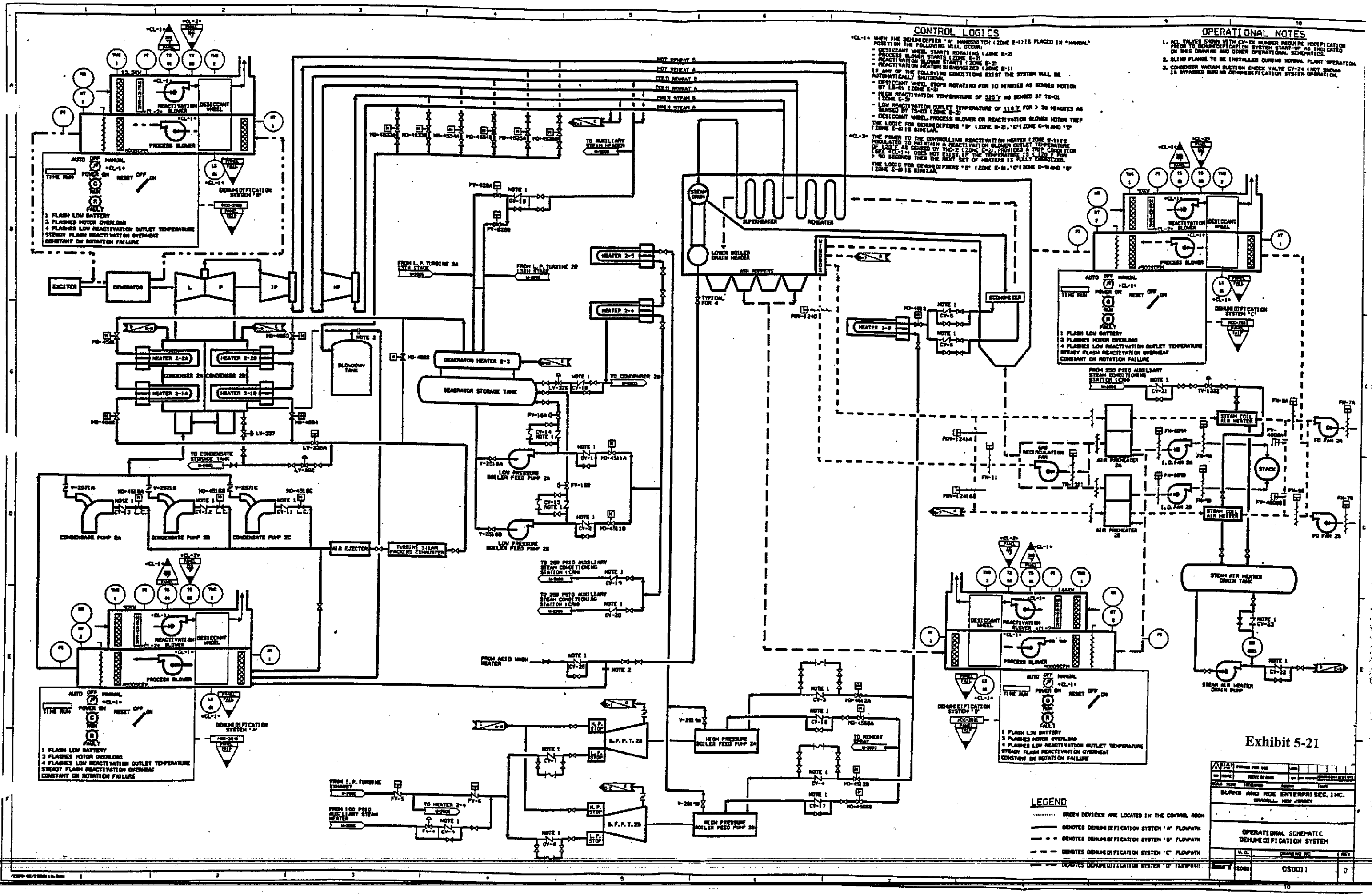
CONTROL LOGICS
CL-1 WHEN THE DEHUMIDIFIER "A" HANDSWITCH (ZONE E-1) IS PLACED IN "MANUAL" POSITION THE FOLLOWING WILL OCCUR:
- DESICCANT WHEEL STARTS ROTATING (ZONE E-2)
- PROCESS BLOWER STARTS (ZONE E-2)
- REACTIVATION BLOWER STARTS (ZONE E-2)
- REACTIVATION HEATER IS ENERGIZED (ZONE E-1)
IF ANY OF THE FOLLOWING CONDITIONS EXIST THE SYSTEM WILL BE AUTOMATICALLY SHUTDOWN.
- DESICCANT WHEEL STOPS ROTATING FOR 10 MINUTES AS SENSED MOTION BY LS-01 (ZONE E-2)
- HIGH REACTIVATION TEMPERATURE OF 325°F AS SENSED BY TS-01 (ZONE E-2)
- LOW REACTIVATION OUTLET TEMPERATURE OF 110°F FOR > 30 MINUTES AS SENSED BY TS-03 (ZONE E-2)
- DESICCANT WHEEL, PROCESS BLOWER OR REACTIVATION BLOWER MOTOR TRIP
THE LOGIC FOR DEHUMIDIFIERS "B" (ZONE D-2), "C" (ZONE C-9) AND "D" (ZONE E-8) IS SIMILAR.
CL-2 THE POWER TO THE CONTROLLINE REACTIVATION HEATER (ZONE E-1) IS REGULATED TO MAINTAIN A REACTIVATION BLOWER OUTLET TEMPERATURE OF 120°F AS SENSED BY THC-2 (ZONE E-2). PROVIDED A TRIP CONDITION (SEE "CL-1") DOES NOT EXIST, IF THE TEMPERATURE IS < 120°F FOR > 90 SECONDS THEN THE NEXT SET OF HEATERS IS FULLY ENERGIZED.
THE LOGIC FOR DEHUMIDIFIERS "B" (ZONE E-8), "C" (ZONE C-9) AND "D" (ZONE E-8) IS SIMILAR.
OPERATIONAL NOTES
1. ALL VALVES SHOWN WITH CV-XX NUMBER REQUIRE MODIFICATION PRIOR TO DEHUMIDIFICATION SYSTEM START-UP AS INDICATED ON THIS DRAWING AND OTHER OPERATIONAL SCHEMATICS.
2. BLIND FLANGE TO BE INSTALLED DURING NORMAL PLANT OPERATION.
3. CONDENSER VACUUM SUCTION CHECK VALVE CV-24 (NOT SHOWN) IS BYPASSED DURING DEHUMIDIFICATION SYSTEM OPERATION.
DEHUMIDIFICATION SYSTEM "B"
DEHUMIDIFICATION SYSTEM "C"
DEHUMIDIFICATION SYSTEM "D"
1 FLASH LOW BATTERY
3 FLASHES MOTOR OVERLOAD
4 FLASHES LOW REACTIVATION OUTLET TEMPERATURE
STEADY FLASH REACTIVATION OVERHEAT
CONSTANT ON ROTATION FAILURE
REACTIVATION BLOWER
DESICCANT WHEEL
PROCESS BLOWER
EXCITER
GENERATOR
HEATER 2-2A
HEATER 2-2B
HEATER 2-1A
HEATER 2-1B
CONDENSER 2A
CONDENSER 2B
BLOWDOWN TANK
DEAERATOR HEATER 2-3
DEAERATOR STORAGE TANK
HEATER 2-5
HEATER 2-4
HEATER 2-6
STEAM DRUM
SUPERHEATER
REHEATER
LOWER BOILER DRAIN HEADER
ECONOMIZER
CONDENSATE PUMP 2A
CONDENSATE PUMP 2B
CONDENSATE PUMP 2C
AIR EJECTOR
TURBINE STEAM PACKING EXHAUSTER
LOW PRESSURE BOILER FEED PUMP 2A
LOW PRESSURE BOILER FEED PUMP 2B
HIGH PRESSURE BOILER FEED PUMP 2A
HIGH PRESSURE BOILER FEED PUMP 2B
B.F.P.T. 2A
B.F.P.T. 2B
STEAM COIL AIR HEATER
AIR PREHEATER 2A
AIR PREHEATER 2B
I.D. FAN 2A
I.D. FAN 2B
FD FAN 2A
FD FAN 2B
STACK
STEAM AIR HEATER DRAIN TANK
STEAM AIR HEATER DRAIN PUMP
LEGEND
GREEN DEVICES ARE LOCATED IN THE CONTROL ROOM
DENOTES DEHUMIDIFICATION SYSTEM "A" FLOWPATH
DENOTES DEHUMIDIFICATION SYSTEM "B" FLOWPATH
DENOTES DEHUMIDIFICATION SYSTEM "C" FLOWPATH
DENOTES DEHUMIDIFICATION SYSTEM "D" FLOWPATH
BURNS AND ROE ENTERPRISES, INC.
OPERATIONAL SCHEMATIC
DEHUMIDIFICATION SYSTEM
DS0011
0

Exhibit 5-21

6.0 ECONOMIC AND FINANCIAL ANALYSES

6.1 General

The methodology employed in the economic evaluation of the repowering of the North Bangkok Station and in comparing it with a new, hypothetical, green field plant uses projections of the several annual cost components for power summed, divided by the total load generated and discounted over the economic life of the plant to yield a levelized cost of power.

The base case analysis utilizes the same set of economic parameters and methodology used in Section 4, Assessment of Repowering Options, to select the best configuration for repowering of the North Bangkok units.

In addition to the base case, several cases were analyzed using variations on key parameters as inputs to determine the sensitivity of results to changes in economic and related conditions.

The annual costs for the production of power include capital and operating costs. The capital costs consist of the repayment of loans including interest charges, the required return on equity, and the capitalization of some equipment replacement items. The capital costs for any given year are essentially independent of the amount of electricity produced or the hours of plant operation in that year.

The operating costs consist primarily of fuel, additional consumable material, operating and maintenance labor, contract maintenance, replacement parts, standby power, insurance, and training. Operating costs can be divided among two categories, variable or fixed, according to whether or not they are largely dependent of the hours of plant operation and power produced. The variable costs generally include fuel and consumables. They also include a portion of the repair and maintenance expenses, particularly those for the major equipment overhauls associated with the accumulation of operating hours.

Since most of the labor cost for the normal operating and maintenance staff of a plant is independent of the hours of operation and the power output, the majority of labor costs are assigned to the fixed operating cost category. Other costs included in the fixed category include such support services as trash removal, some specialist service contracts, training expenses, and standby power.

For the base case analysis, the annual electric production of the plant assumes annual capacity factor of 80 percent. Sensitivity analyses were conducted for annual capacity factors ranging from 60 to 90 percent.

The results for the base case economic comparison of the repowered and the green field plants are shown on Exhibit 6-1.

6.2 Base Case Economic Parameters

The base case comparison of the best repowering option with a new green field plant is based on the following economic factors:

Capital Cost Base Year	7/1/00
Commercial Operation	1/1/05
Annual Capacity Factor	80.00%
Long Term Interest Rate	10.00%
Debt	75.00%
Debt Term - years from COD	13 (including grace period)
Economic Life - years	20
Capital Replacements	0.30%/year
Present Worth Discount Rate	12.00%
Return on Equity	12.00%
Construction Escalation Rate	4.00%
Construction Interest Rate	10.00%

	@ 7/1/00	Rate of Escalation
Gas Cost - $/MMBtu (HHV)	3.00	2.00%
Variable O&M - $/kWh	0.0030	4.00%
Fixed O&M - $1000/yr	6,800	4.00%
Insurance	0.60%/year	

6.3 New Green Field Plant

To confirm the economic merit of repowering, base case analysis involves a comparison of the best repowering option identified in Section 4 with a hypothetical, new green field plant. The green field plant would be of a similar size, would utilize the same technology of combined cycle burning natural gas, and would utilize the most advanced and efficient equipment commercially available. The green field plant is assumed to be located in the same general area close to the load center, at a short distance (10 to 15 km) from the nearest EGAT 230 kV substation and close enough to the existing gas pipeline grid to induce PTT to construct a spur to the new plant.

6.4 Capital Costs

The total plant cost to repower the North Bangkok units with the Nong Chok gas turbines was estimated at 160 million US dollars. Plant cost includes replacing the 69 kV switchyard with a new 230 kV GIS type and connecting the switchyard to EGAT's new 230 kV substation. It is based on July 1, 2000 prices and assumes overnight construction, that is it does not include price escalation to date of construction and interest paid during construction.

The breakdown by disciplines and major systems is presented in Exhibit 6-2. Total direct construction costs are $114 million of which 67% for is mechanical

equipment and systems, 28% for electrical and switchyard and the remaining 5% for controls, instrumentation, and civil and structural works. Indirect construction costs comprise engineering and design, construction management, construction equipment, field staffing, utilities and consumables, freight and insurance. A contingency of 15% of total direct and indirect costs was added to account for possible design changes, additional miscellaneous equipment and materials that could not be quantified yet and additional cost of equipment overhauls and repairs that may be needed to assure reliable future operation. The estimates were based on the conceptual design outlined in Section 5, budgetary quotations from manufacturers for major equipment and components as well as on cost data base developed from similar previous work, adjusted as necessary for size, date of procurement and local labor rates for installation and construction activities.

The new green field plant cost estimate (Exhibit 6-3) is based on recent published data and on Burns and Roe and Power Tech in-house records. It includes an allowance of 30 million US dollars for land acquisition, transmission Right-of-Way (ROW) and a 230 kV interconnection to EGAT's substation.

6.5 Operating Costs

Unit fuel costs of natural gas as well as operating and maintenance (O&M) costs were assumed to be the same for the repowered facility as for the new green field plant and are listed in Section 6.2.

6.6 Sensitivity Analyses

In order to determine the sensitivity of the results to possible changes in economic and plant operating parameters, additional analyses were conducted assuming variations of the following:

- Fuel escalation rates (1 to 5%/yr)
- Capital cost of repowering (multiplier 0.9 to 1.3)
- Plant annual capacity factor (60 to 90%)

The results of these analyses are presented graphically in Exhibits 6-4, 6-5 and 6-6. These results confirm that the repowering alternative remains economically attractive even if these key parameters differ from assumed values.

EXHIBITS

SECTION 6

6-1	Comparison: Repowered North Bangkok Plant with New Greenfield Plant
6-2	Capital Cost Estimate for North Bangkok Repowering
6-3	Capital Cost Estimate for new Greenfield Plant
6-4	Sensitivity Analysis – Effects of Fuel Escalation Rate
6-5	Sensitivity Analysis – Effect of Changes in Capital Costs
6-6	Sensitivity Analysis – Effects of Capacity Factor
6-7	Economic Evaluation – Repowered North Bangkok Plant
6-8	Economic Evaluation – New Greenfield Plant

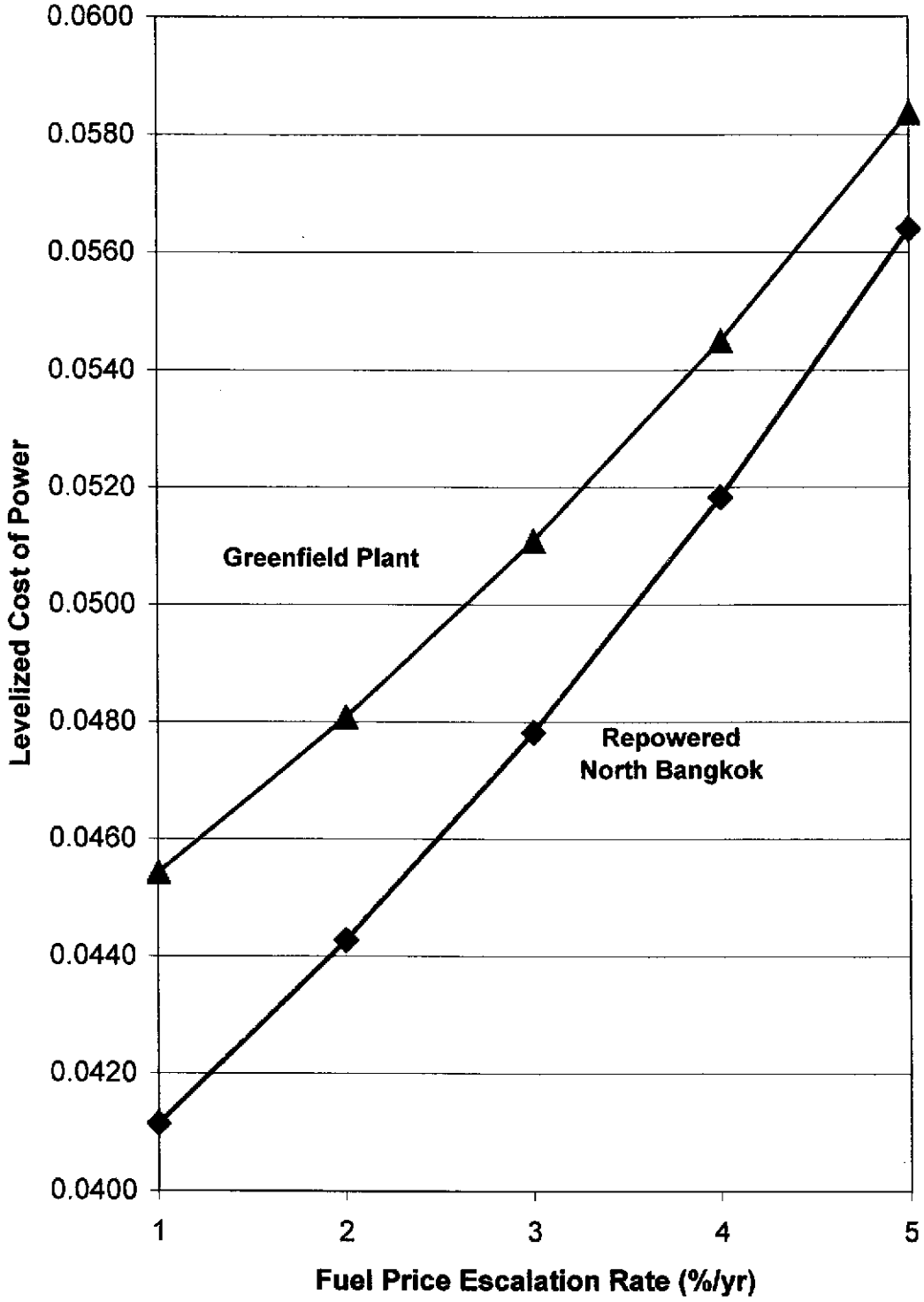

Exhibit 6-4
SENSITIVITY ANALYSIS - EFFECTS OF FUEL ESCALATION RATE

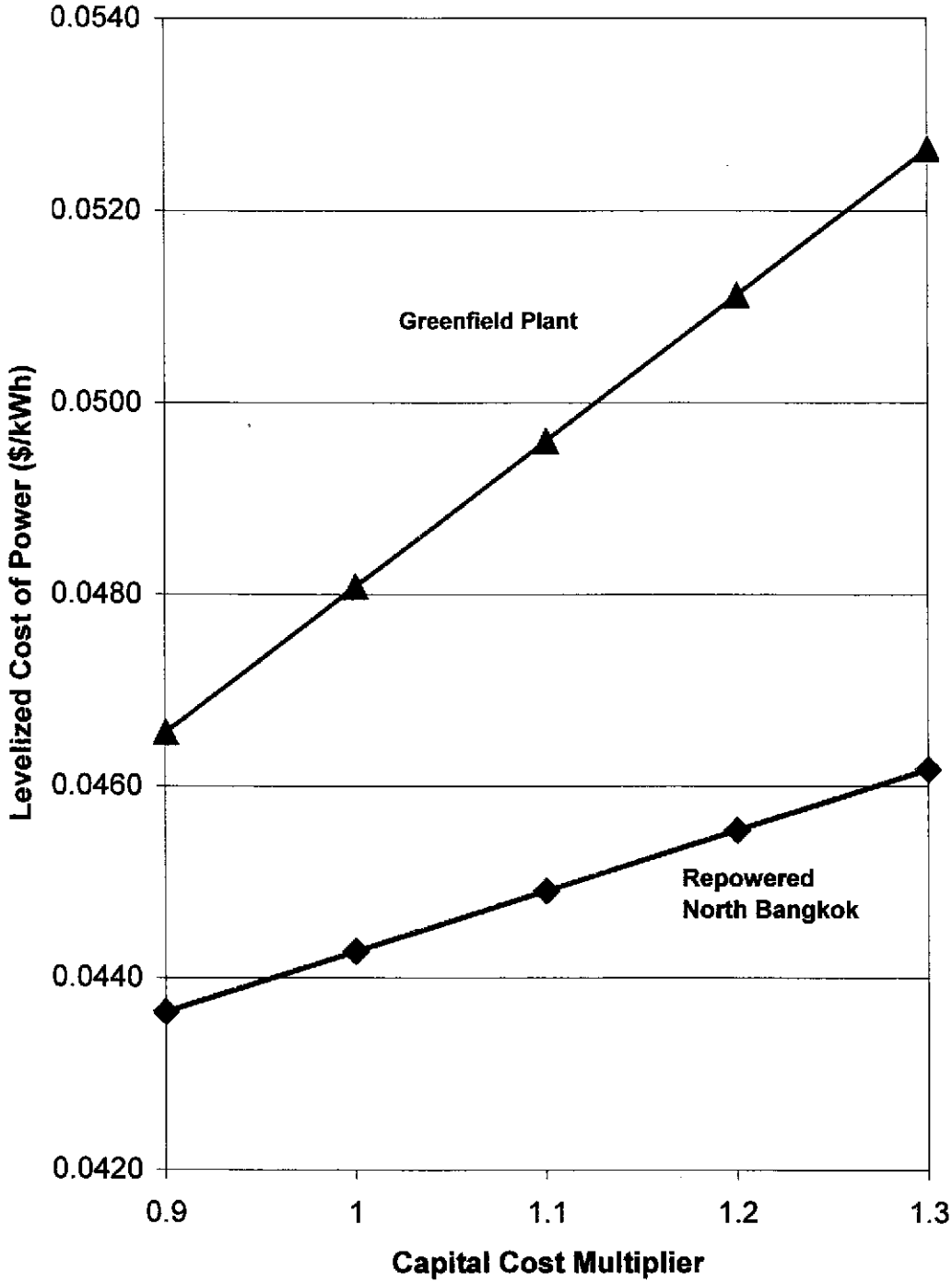

Exhibit 6-5
SENSITIVY ANALYSIS - EFFECTS OF CHANGES IN CAPITAL COSTS

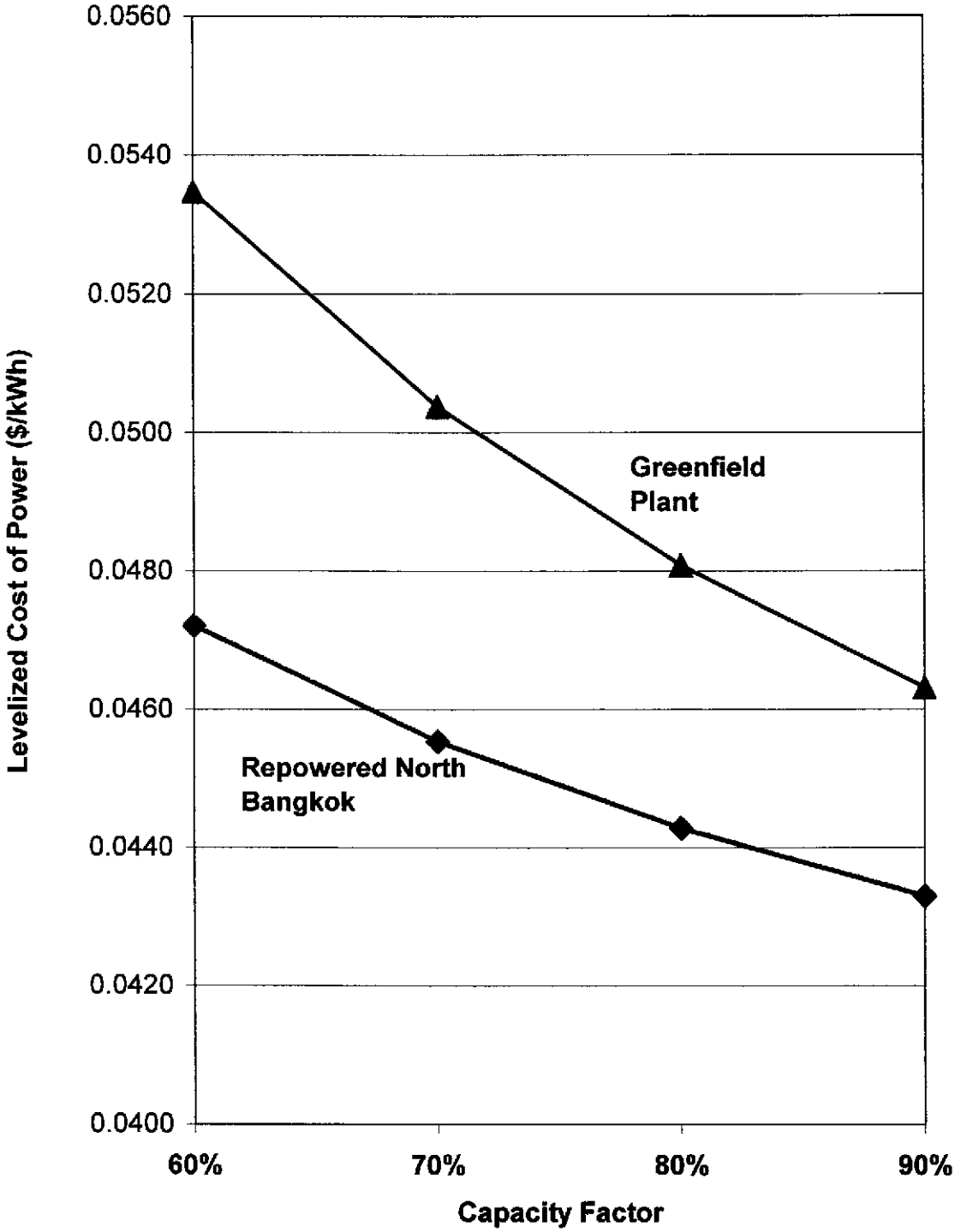

Exhibit 6-6
SENSITIVITY ANALYSIS - EFFECTS OF CAPACITY FACTOR

Exhibit 6-7 Sheet 1

ECONOMIC EVALUATION - REPOWERED NORTH BANGKOK PLANT

Capital Cost & Operating Data	
Base Capital Cost - $1000	160,000
Capital Cost Base Year	Jul-00
Construction Start	Apr-03
Escalation - $1000	24,472
IDC - $1000	16,103
Total Capital Cost - $1000	200,575
Commercial Operation	Jan-05
Design Capacity - kW	602,928
Annual Capacity Factor	80.00%
Generation with Duct Firing	20.00%

Economic Assumptions	
Long Term Interest Rate	10.00%
Debt	75.00%
Debt Term - years from COD	13
Return on Equity	12.00%
Economic Life - years	20
Capital Replacements	0.30%
Present Worth Discount Rate	12.00%
Construction Escalation Rate	4.00%
Construction Interest Rate	10.00%
Tax Life for Depreciation - yrs	20
Income Tax Rate	0%

Unit Costs in year	Jul-00	Escalation
Gas Cost - $/MMBtu HHV	3.00	2.00%
Variable O&M - $/kWh	0.0030	4.00%
Fixed O&M - $1000/yr	6,800	4.00%
Insurance	0.60%	0.00%

Plant Performance Parameters		
Net Plant Output - kW	Unfired	559,896
	Fired	602,928
Net Plant Heat Rate - Btu/kWh (LHV)		7,431
	Fired	7,493

Year Beginning ...	Jan-05	Jan-06	Jan-07	Jan-08	Jan-09	Jan-10	Jan-11	Jan-12	Jan-13	Jan-14
Annual Operating Quantities										
Energy Output MWh/yr	4,225,319	4,225,319	4,225,319	4,225,319	4,225,319	4,225,319	4,225,319	4,225,319	4,225,319	4,225,319
Average Heat Rate - Btu/kWh LHV	7,443	7,443	7,443	7,443	7,443	7,443	7,443	7,443	7,443	7,443
Gas Consumption MMBtu/yr HHV	34,909,587	34,909,587	34,909,587	34,909,587	34,909,587	34,909,587	34,909,587	34,909,587	34,909,587	34,909,587
Unit Costs										
Gas Cost - $/MMBtu HHV	3.28	3.35	3.41	3.48	3.55	3.62	3.69	3.77	3.84	3.92
Variable O&M - $/kWh	0.0037	0.0038	0.0040	0.0042	0.0043	0.0045	0.0047	0.0049	0.0051	0.0053
Annual Operating Costs - $1000/yr										
Natural Gas Fuel	114,498	116,788	119,124	121,507	123,937	126,415	128,944	131,523	134,153	136,836
Fixed O&M	8,114	8,439	8,777	9,129	9,495	9,876	10,271	10,683	11,111	11,557
Variable O&M	15,598	16,222	16,871	17,545	18,247	18,977	19,736	20,526	21,347	22,201
Insurance	1,203	1,203	1,203	1,203	1,203	1,203	1,203	1,203	1,203	1,203
Total Operating Costs	139,413	142,652	145,975	149,385	152,882	156,472	160,155	163,935	167,815	171,797
Annual Capital Costs - $1000/yr										
Debt Service	21,177	21,177	21,177	21,177	21,177	21,177	21,177	21,177	21,177	21,177
Capital Replacements	602	602	602	602	602	602	602	602	602	602
Equity Return & Amort	6,713	6,713	6,713	6,713	6,713	6,713	6,713	6,713	6,713	6,713
Total Annual Capital Charges	28,492	28,492	28,492	28,492	28,492	28,492	28,492	28,492	28,492	28,492
Annual Capital Charges - /kW	47.3	47.3	47.3	47.3	47.3	47.3	47.3	47.3	47.3	47.3
Revenue Req'd Excluding Tax	167,906	171,145	174,468	177,877	181,375	184,964	188,647	192,427	196,307	200,289
Income Taxes - $1000/yr										
Depreciation	10,029	10,029	10,029	10,029	10,029	10,029	10,029	10,029	10,029	10,029
Interest Expense	15,043	14,430	13,755	13,013	12,196	11,298	10,310	9,223	8,028	6,713
Taxable Income	2,819	3,432	4,107	4,849	5,666	6,564	7,552	8,639	9,834	11,149
Income Tax	0	0	0	0	0	0	0	0	0	0
Total Revenue Required - $1000/yr	167,906	171,145	174,468	177,877	181,375	184,964	188,647	192,427	196,307	200,289
Generation Costs - $/kWh										
Capital Charges & Taxes	0.007	0.007	0.007	0.007	0.007	0.007	0.007	0.007	0.007	0.007
Fuel Costs	0.027	0.028	0.028	0.029	0.029	0.030	0.031	0.031	0.032	0.032
Operating & Maintenance	0.006	0.006	0.006	0.007	0.007	0.007	0.007	0.008	0.008	0.008
Total Costs	0.040	0.041	0.041	0.042	0.043	0.044	0.045	0.046	0.046	0.047

Levelized Generation Costs (over Economic Life)

Total 0.044 $/kWh **Capital 0.006 $/kWh** **Fuel 0.031 $/kWh** **O&M 0.008 $/kWh**

Exhibit 6-7 Sheet 2

ECONOMIC EVALUATION - REPOWERED NORTH BANGKOK PLANT

Capital Cost & Operating Data	
Base Capital Cost - $1000	160,000
Capital Cost Base Year	Jul-00
Construction Start	Apr-03
Escalation - $1000	24,472
IDC - $1000	16,103
Total Capital Cost - $1000	200,575
Commercial Operation	Jan-05
Design Capacity - kW	602,928
Annual Capacity Factor	80.00%
Generation with Duct Firing	20.00%

Economic Assumptions	
Long Term Interest Rate	10.00%
Debt	75.00%
Debt Term - years from COD	13
Return on Equity	12.00%
Economic Life - years	20
Capital Replacements	0.30%
Present Worth Discount Rate	12.00%
Construction Escalation Rate	4.00%
Construction Interest Rate	10.00%
Tax Life for Depreciation - yrs	20
Income Tax Rate	0%

Unit Costs in year	Jul-00	Escalation
Gas Cost - $/MMBtu HHV	3.00	2.00%
Variable O&M - $/kWh	0.0030	4.00%
Fixed O&M - $1000/yr	6,800	4.00%
Insurance	0.60%	0.00%

Plant Performance Parameters		
Net Plant Output - kW	Unfired	559,896
	Fired	602,928
Net Plant Heat Rate - Btu/kWh (LHV)		7,431
	Fired	7,493

Year Beginning ...	Jan-15	Jan-16	Jan-17	Jan-18	Jan-19	Jan-20	Jan-21	Jan-22	Jan-23	Jan-24
Annual Operating Quantities										
Energy Output MWh/yr	4,225,319	4,225,319	4,225,319	4,225,319	4,225,319	4,225,319	4,225,319	4,225,319	4,225,319	4,225,319
Average Heat Rate - Btu/kWh LHV	7,443	7,443	7,443	7,443	7,443	7,443	7,443	7,443	7,443	7,443
Gas Consumption MMBtu/yr HHV	34,909,587	34,909,587	34,909,587	34,909,587	34,909,587	34,909,587	34,909,587	34,909,587	34,909,587	34,909,587
Unit Costs										
Gas Cost - $/MMBtu HHV	4.00	4.08	4.16	4.24	4.33	4.41	4.50	4.59	4.68	4.78
Variable O&M - $/kWh	0.0055	0.0057	0.0059	0.0061	0.0064	0.0066	0.0069	0.0072	0.0075	0.0078
Annual Operating Costs - $1000/yr										
Natural Gas Fuel	139,573	142,364	145,212	148,116	151,078	154,100	157,182	160,325	163,532	166,802
Fixed O&M	12,020	12,502	13,003	13,524	14,066	14,630	15,217	15,826	16,461	17,121
Variable O&M	23,089	24,012	24,973	25,972	27,010	28,091	29,214	30,383	31,598	32,862
Insurance	1,203	1,203	1,203	1,203	1,203	1,203	1,203	1,203	1,203	1,203
Total Operating Costs	175,885	180,082	184,391	188,815	193,358	198,024	202,816	207,738	212,794	217,989
Annual Capital Costs - $1000/yr										
Debt Service	21,177	21,177	21,177	0	0	0	0	0	0	0
Capital Replacements	602	602	602	602	602	602	602	602	602	602
Equity Return & Amort	6,713	6,713	6,713	6,713	6,713	6,713	6,713	6,713	6,713	6,713
Total Annual Capital Charges	28,492	28,492	28,492	7,315	7,315	7,315	7,315	7,315	7,315	7,315
Annual Capital Charges - /kW	47.3	47.3	47.3	12.1	12.1	12.1	12.1	12.1	12.1	12.1
Revenue Req'd Excluding Tax	204,377	208,574	212,883	196,130	200,673	205,339	210,131	215,053	220,109	225,304
Income Taxes - $1000/yr										
Depreciation	10,029	10,029	10,029	10,029	10,029	10,029	10,029	10,029	10,029	10,029
Interest Expense	5,267	3,675	1,925	0	0	0	0	0	0	0
Taxable Income	12,595	14,186	15,937	(3,316)	(3,316)	(3,316)	(3,316)	(3,316)	(3,316)	(3,316)
Income Tax	0	0	0	0	0	0	0	0	0	0
Total Revenue Required - $1000/yr	204,377	208,574	212,883	196,130	200,673	205,339	210,131	215,053	220,109	225,304
Generation Costs - $/kWh										
Capital Charges & Taxes	0.007	0.007	0.007	0.002	0.002	0.002	0.002	0.002	0.002	0.002
Fuel Costs	0.033	0.034	0.034	0.035	0.036	0.036	0.037	0.038	0.039	0.039
Operating & Maintenance	0.009	0.009	0.009	0.010	0.010	0.010	0.011	0.011	0.012	0.012
Total Costs	0.048	0.049	0.050	0.046	0.047	0.049	0.050	0.051	0.052	0.053

Levelized Generation Costs (over Economic Life)

Total 0.044 $/kWh **Capital 0.006 $/kWh** **Fuel 0.031 $/kWh** **O&M 0.008 $/kWh**

Exhibit 6-8 Sheet 1

ECONOMIC EVALUATION - NEW GREENFIELD PLANT

Capital Cost & Operating Data	
Base Capital Cost - $1000	428,000
Capital Cost Base Year	Jul-00
Construction Start	Jul-02
Escalation - $1000	58,251
IDC - $1000	61,702
Total Capital Cost - $1000	547,953
Commercial Operation	Jan-05
Design Capacity - kW	684,600
Annual Capacity Factor	80.00%
Generation with Duct Firing	0.00%

Economic Assumptions	
Long Term Interest Rate	10.00%
Debt	75.00%
Debt Term - years from COD	13
Return on Equity	12.00%
Economic Life - years	20
Capital Replacements	0.30%
Present Worth Discount Rate	12.00%
Construction Escalation Rate	4.00%
Construction Interest Rate	10.00%
Tax Life for Depreciation - yrs	20
Income Tax Rate	0%

Unit Costs in year	Jul-00	Escalation
Gas Cost - $/MMBtu HHV	3.00	2.00%
Variable O&M - $/kWh	0.0030	4.00%
Fixed O&M - $1000/yr	6,800	4.00%
Insurance	0.60%	0.00%

Plant Performance Parameters		
Net Plant Output - kW	Unfired	684,600
	Fired	NA
Net Plant Heat Rate - Btu/kWh (LHV)		6,320
	Fired	NA

Year Beginning ...	Jan-05	Jan-06	Jan-07	Jan-08	Jan-09	Jan-10	Jan-11	Jan-12	Jan-13	Jan-14
Annual Operating Quantities										
Energy Output MWh/yr	4,797,677	4,797,677	4,797,677	4,797,677	4,797,677	4,797,677	4,797,677	4,797,677	4,797,677	4,797,677
Average Heat Rate - Btu/kWh LHV	6,320	6,320	6,320	6,320	6,320	6,320	6,320	6,320	6,320	6,320
Gas Consumption MMBtu/yr HHV	33,656,120	33,656,120	33,656,120	33,656,120	33,656,120	33,656,120	33,656,120	33,656,120	33,656,120	33,656,120
Unit Costs										
Gas Cost - $/MMBtu HHV	3.28	3.35	3.41	3.48	3.55	3.62	3.69	3.77	3.84	3.92
Variable O&M - $/kWh	0.0036	0.0037	0.0039	0.0040	0.0042	0.0044	0.0045	0.0047	0.0049	0.0051
Annual Operating Costs - $1000/yr										
Natural Gas Fuel	110,387	112,595	114,847	117,144	119,487	121,876	124,314	126,800	129,336	131,923
Fixed O&M	8,114	8,439	8,777	9,129	9,495	9,876	10,271	10,683	11,111	11,557
Variable O&M	17,174	17,861	18,575	19,318	20,091	20,895	21,730	22,600	23,504	24,444
Insurance	3,288	3,288	3,288	3,288	3,288	3,288	3,288	3,288	3,288	3,288
Total Operating Costs	138,962	142,182	145,487	148,879	152,360	155,934	159,603	163,371	167,239	171,211
Annual Capital Costs - $1000/yr										
Debt Service	57,855	57,855	57,855	57,855	57,855	57,855	57,855	57,855	57,855	57,855
Capital Replacements	1,644	1,644	1,644	1,644	1,644	1,644	1,644	1,644	1,644	1,644
Equity Return & Amort	18,340	18,340	18,340	18,340	18,340	18,340	18,340	18,340	18,340	18,340
Total Annual Capital Charges	77,839	77,839	77,839	77,839	77,839	77,839	77,839	77,839	77,839	77,839
Annual Capital Charges - /kW	113.7	113.7	113.7	113.7	113.7	113.7	113.7	113.7	113.7	113.7
Revenue Req'd Excluding Tax	216,801	220,021	223,326	226,717	230,199	233,773	237,442	241,209	245,077	249,050
Income Taxes - $1000/yr										
Depreciation	27,398	27,398	27,398	27,398	27,398	27,398	27,398	27,398	27,398	27,398
Interest Expense	41,096	39,421	37,577	35,549	33,319	30,865	28,166	25,197	21,932	18,339
Taxable Income	7,701	9,377	11,220	13,248	15,478	17,932	20,631	23,600	26,866	30,458
Income Tax	0	0	0	0	0	0	0	0	0	0
Total Revenue Required - $1000/yr	216,801	220,021	223,326	226,717	230,199	233,773	237,442	241,209	245,077	249,050
Generation Costs - $/kWh										
Capital Charges & Taxes	0.016	0.016	0.016	0.016	0.016	0.016	0.016	0.016	0.016	0.016
Fuel Costs	0.023	0.023	0.024	0.024	0.025	0.025	0.026	0.026	0.027	0.027
Operating & Maintenance	0.006	0.006	0.006	0.007	0.007	0.007	0.007	0.008	0.008	0.008
Total Costs	0.045	0.046	0.047	0.047	0.048	0.049	0.049	0.050	0.051	0.052

Levelized Generation Costs (over Economic Life)

Total 0.048 $/kWh **Capital 0.015 $/kWh** **Fuel 0.026 $/kWh** **O&M 0.008 $/kWh**

Exhibit 6-8 Sheet 2

ECONOMIC EVALUATION - NEW GREENFIELD PLANT

Capital Cost & Operating Data	
Base Capital Cost - $1000	428,000
Capital Cost Base Year	Jul-00
Construction Start	Jul-02
Escalation - $1000	58,251
IDC - $1000	61,702
Total Capital Cost - $1000	547,953
Commercial Operation	Jan-05
Design Capacity - kW	684,600
Annual Capacity Factor	80.00%
Generation with Duct Firing	0.00%

Economic Assumptions	
Long Term Interest Rate	10.00%
Debt	75.00%
Debt Term - years from COD	13
Return on Equity	12.00%
Economic Life - years	20
Capital Replacements	0.30%
Present Worth Discount Rate	12.00%
Construction Escalation Rate	4.00%
Construction Interest Rate	10.00%
Tax Life for Depreciation - yrs	20
Income Tax Rate	0%

Unit Costs in year	Jul-00	Escalation
Gas Cost - $/MMBtu HHV	3.00	2.00%
Variable O&M - $/kWh	0.0030	4.00%
Fixed O&M - $1000/yr	6,800	4.00%
Insurance	0.60%	0.00%

Plant Performance Parameters		
Net Plant Output - kW	Unfired	684,600
	Fired	NA
Net Plant Heat Rate - Btu/kWh (LHV)		6,320
	Fired	NA

Year Beginning ...	Jan-15	Jan-16	Jan-17	Jan-18	Jan-19	Jan-20	Jan-21	Jan-22	Jan-23	Jan-24
Annual Operating Quantities										
Energy Output MWh/yr	4,797,677	4,797,677	4,797,677	4,797,677	4,797,677	4,797,677	4,797,677	4,797,677	4,797,677	4,797,677
Average Heat Rate - Btu/kWh LHV	6,320	6,320	6,320	6,320	6,320	6,320	6,320	6,320	6,320	6,320
Gas Consumption MMBtu/yr HHV	33,656,120	33,656,120	33,656,120	33,656,120	33,656,120	33,656,120	33,656,120	33,656,120	33,656,120	33,656,120
Unit Costs										
Gas Cost - $/MMBtu HHV	4.00	4.08	4.16	4.24	4.33	4.41	4.50	4.59	4.68	4.78
Variable O&M - $/kWh	0.0053	0.0055	0.0057	0.0060	0.0062	0.0064	0.0067	0.0070	0.0073	0.0075
Annual Operating Costs - $1000/yr										
Natural Gas Fuel	134,561	137,253	139,998	142,798	145,653	148,567	151,538	154,569	157,660	160,813
Fixed O&M	12,020	12,502	13,003	13,524	14,066	14,630	15,217	15,826	16,461	17,121
Variable O&M	25,421	26,438	27,496	28,596	29,739	30,929	32,166	33,453	34,791	36,183
Insurance	3,288	3,288	3,288	3,288	3,288	3,288	3,288	3,288	3,288	3,288
Total Operating Costs	175,290	179,480	183,784	188,205	192,747	197,413	202,208	207,136	212,200	217,404
Annual Capital Costs - $1000/yr										
Debt Service	57,855	57,855	57,855	0	0	0	0	0	0	0
Capital Replacements	1,644	1,644	1,644	1,644	1,644	1,644	1,644	1,644	1,644	1,644
Equity Return & Amort	18,340	18,340	18,340	18,340	18,340	18,340	18,340	18,340	18,340	18,340
Total Annual Capital Charges	77,839	77,839	77,839	19,984	19,984	19,984	19,984	19,984	19,984	19,984
Annual Capital Charges - /kW	113.7	113.7	113.7	29.2	29.2	29.2	29.2	29.2	29.2	29.2
Revenue Req'd Excluding Tax	253,129	257,319	261,623	208,189	212,731	217,397	222,192	227,119	232,183	237,388
Income Taxes - $1000/yr										
Depreciation	27,398	27,398	27,398	27,398	27,398	27,398	27,398	27,398	27,398	27,398
Interest Expense	14,388	10,041	5,260	0	0	0	0	0	0	0
Taxable Income	34,409	38,756	43,538	(9,058)	(9,058)	(9,058)	(9,058)	(9,058)	(9,058)	(9,058)
Income Tax	0	0	0	0	0	0	0	0	0	0
Total Revenue Required - $1000/yr	253,129	257,319	261,623	208,189	212,731	217,397	222,192	227,119	232,183	237,388
Generation Costs - $/kWh										
Capital Charges & Taxes	0.016	0.016	0.016	0.004	0.004	0.004	0.004	0.004	0.004	0.004
Fuel Costs	0.028	0.029	0.029	0.030	0.030	0.031	0.032	0.032	0.033	0.034
Operating & Maintenance	0.008	0.009	0.009	0.009	0.010	0.010	0.011	0.011	0.011	0.012
Total Costs	0.053	0.054	0.055	0.043	0.044	0.045	0.046	0.047	0.048	0.049

Levelized Generation Costs (over Economic Life)

Total 0.048 $/kWh **Capital 0.015 $/kWh** **Fuel 0.026 $/kWh** **O&M 0.008 $/kWh**

APPENDIX A

EQUIPMENT

- CENTRIFUGAL PUMP
- ELECTROMAGNETIC PUMP
- PISTON PUMP
- ROTARY PUMP
- GENERAL PURPOSE VERTICAL PUMP
- CAN TYPE PUMP
- VERTICAL PUMP
- METERING PUMP
- SUBMERGED PUMP
- SUMP PUMP
- AIR COMPRESSOR CENTRIFUGAL TYPE
- AIR COMPRESSOR PISTON TYPE
- SCREW COMPRESSOR
- DIESEL DRIVE
- ELECTRIC MOTOR DRIVE
- SOLENOID DRIVE
- AIR MOTOR DRIVE
- TURBINE
- EDUCTOR OR EJECTOR
- DESUPERHEATER
- AGITATOR OR MIXER
- VERTICAL PUMP

EQUIPMENT (CONT'D)

- HEAT EXCHANGERS OR COOLERS
- PLATE HEAT EXCHANGER
- KETTLE REBOILER

VALVES

- GATE
- GLOBE
- BELLOWS SEALED GLOBE
- INCLINED STEM GLOBE
- BUTTERFLY
- CHECK
- STOP CHECK
- ALARM CHECK
- SPRING CHECK
- AUTOMATIC CHECK POSITIVE CLOSING
- AUTOMATIC BALL DRIP CHECK
- EXCESS FLOW CHECK (SPRING TYPE)
- DRY PIPE SPRINKLER VALVE
- ANGLE CHECK (STOP CHECK)
- THREE WAY
- FOUR WAY
- COCK
- BALL
- PLUG
- DIAPHRAM
- NEEDLE
- PINCH
- INCLINED STEM GATE
- RECIRCULATION VALVE
- ANGLE BLOWDOWN
- ANGLE
- HOSE GATE
- HOSE GLOBE
- HOSE ANGLE
- FIRE HOSE, EXPOSED
- HYDRANT
- HYDRANT WITH HOSE STATION
- DELUGE
- KNIFE GATE
- SLUICE (SOLIDIFICATION SYSTEM)
- POST INDICATOR
- AUTOMATIC AIR VENT
- VACUUM BREAKER
- SAFETY OR RELIEF
- ELECTROMATIC RELIEF
- SAFETY OR RELIEF STRAIGHT THROUGH

VALVES

- BACKFLOW PREVENTER
- TWO WAY SOLENOID
- THREE WAY SOLENOID
- FOUR WAY SOLENOID
- FOUR WAY DUAL SOLENOID

ACTUATORS

- AIR CYLINDER OPERATED
- AIR WRENCH OPERATED
- MOTOR OPERATED
- MOTOR OPERATED WITH SLIDE WIRE POSITION TRANSMITTER
- HYDRAULIC OPERATED
- ELECTRO-HYDRAULIC
- SINGLE ACTING CYLINDER WITHOUT POSITIONER OR OTHER PILOT
- DOUBLE ACTING CYLINDER WITHOUT POSITIONER OR OTHER PILOT
- DIAPHRAGM OPERATED
- DIAPHRAGM OPERATED WITH POSITIONER
- PRESSURE REDUCING REGULATOR SELF CONTAINED
- BACK PRESSURE REGULATOR SELF CONTAINED
- PRESSURE REDUCING REGULATOR WITH EXTERNAL PRESSURE TAP
- BACK PRESSURE REGULATOR WITH EXTERNAL PRESSURE TAP
- TEMPERATURE REGULATOR FILLED SYSTEM TYPE
- DIAPHRAGM PRESSURE BALANCED
- EXTENSION STEM OPERATED
- CONTROL VALVE WITH THROTTLING SERVICE
- CONTROL VALVE WITH LIMIT SWITCHES
- FLOAT TRAP

SPECIALTIES

- ATTEMPERATOR
- BEARING
- SERVICE CONNECTION
- QUICK DISCONNECT
- FLOOR DRAIN, HUB OR TRENCH
- FUNNEL DRAIN
- FLOOR TRENCH
- DRIP PAN ELBOW (FOR STEAM RELIEF VALVE) DRAIN
- EXHAUST HEAD
- FILTER
- FLEXIBLE CONNECTION
- EXPANSION JOINT
- PLUG OR CAP
- BUTT WELDED CAP
- REDUCER OR INCREASER
- RUPTURE DISK VACUUM RELIEF
- RUPTURE DISK PRESSURE RELIEF
- SAFETY HEAD
- CHEMICAL SEAL
- LOOP SEAL
- SPRAY NOZZLES
- THERMAL SLEEVE
- MIXING TEE
- SPOOL PIECE
- CIRCULAR OR HAMMER BLIND
- FLANGE CONNECTION
- BLIND FLANGE
- INSULATING FLANGE
- SPECTACLE FLANGE
- DUPLEX STRAINER
- SIMPLEX STRAINER
- TANK SCREEN STRAINER
- TEMPORARY STRAINER
- Y TYPE STRAINER
- DRIP POT
- STEAM TRAP
- BYPASS ATTEMPERATING VALVE
- INJECTION QUILL

SPECIALTIES

- VAPOR TRAP, DRY
- VAPOR TRAP, WET
- FLOW STRAIGHTENING VANES
- VENT (I) = INDOORS (O) = OUTDOORS
- VENT WITH FLAME ARRESTER
- MIST ELIMINATOR (OIL VAPOR) WITH VENT
- FLOW NOZZLE (TUBE OR VENTURI)
- FLOW MEASURING ORIFICE
- RESTRICTING ORIFICE
- PITOT OR PITOT VENTURI TUBE
- IN-LINE SIGHT FLOW GLASS
- FLOW SWITCH
- ROTAMETER TYPE FLOW INDICATOR
- UNCLASSIFIED FLOW ELEMENT
- TURBINE OR PROPELLER TYPE FLOW PRIMARY ELEMENT
- ORIFICE PLATE IN QUICK CHANGE FITTING
- DIFFUSER
- SILENCER W/ DRAIN (FOR STEAM RELIEF VALVE)

NOTE:
ALL GATE OR GLOBE BODY CONTROL VALVES SHALL BE SHOWN AS
VALVES SHOWN SHADED OR MARKED NC INDICATED THEY ARE NORMALLY CLOSED.
ALL OTHER VALVES ARE SHOWN NORMALLY OPEN.

NOTE:
THIS IS A CONCEPTUAL DESIGN DRAWING BASED ON THE INFORMATION AVAILABLE REGARDING THE EXISTING EQUIPMENT WHICH WILL BE REUSED AND BASED ON A CONCEPTUAL DESIGN OF THE ADDITIONAL EQUIPMENT WHICH WILL BE REQUIRED FOR THE REPOWERING PROJECT. ITS PURPOSE IS TO SERVE AS THE BASIS FOR THE BUDGETARY COST ESTIMATE AND THE PREPARATION OF TECHNICAL SPECIFICATION AND TENDER DOCUMENTS.

Rev No	Revision	Date	Dwn	Chkd	Approved Chief Engr	Rev No	Revision	Date	Dwn	Chkd	Approved Chief Engr	Rev No	Revision	Date	Dwn	Chkd	Approved Chief Engr

Drawing Control				
Purpose	Approved By	Date	Released By	Date
For Information				
For Comment				
For Bid				
For Construction				

Engineering Review		
Disc	Engr	Date
Mech		
Elec		
Civil		
Arch		
Instr		
Dwg SM	Chkd	SL
Reviewed By		
Manager-Design&Drafting		

NORTH BANGKOK REPOWERING PROJECT

MECHANICAL SYMBOLS

BURNS AND ROE/POWER TECH ASSOCIATES JOINT VENTURE

Approved for Construction	Date	Work Order	Drawing No	Sh	Rev
Chief MECHANICAL Engineer	Scale NONE	2350	M1 01	1 OF 3	A

2350-01/M1 01 SH1.DGN 12-26-0

HVAC

- SUPPLY AIR DUCT
- EXHAUST OR RETURN AIR DUCT
- FRESH AIR DUCT (SECTION)
- RETURN OR EXHAUST AIR
- SUPPLY AIR
- D — INCLINED DUCT DROP IN DIRECTION OF AIR FLOW
- R — INCLINED DUCT RISE IN DIRECTION OF AIR FLOW
- DUCT WITH INTEGRAL LINING
- RADIUS DUCT ELBOW WITH TURNING VANES
- SQUARE DUCT ELBOW WITH TURNING VANES
- FLEXIBLE CONNECTION
- FLEXIBLE DUCT
- CEILING DIFFUSER, ROUND, BLANKED PORTION SHADED (SHOWN IN PLAN)
- CEILING DIFFUSER, GRILLE OR REGISTER, SQUARE OR RECTANGULAR, BLANKED PORTION SHADED (SHOWN IN PLAN)
- CENTRIFUGAL FAN
- CENTRIFUGAL FAN WITH VORTEX DAMPER
- AXIAL FAN
- AXIAL FAN WITH VORTEX DAMPER
- PROPELLER FAN
- GRAVITY ROOF VENTILATOR
- ROOF AIR INTAKE HOOD

HVAC

- M — POWER ROOF VENTILATOR
- C — COIL, COOLING
- H C — COIL, HEATING (E, S OR W-ELECTRIC, STEAM OR WATER)
- R H C — COIL, REHEAT
- DX — COIL, DIRECT EXPANSION
- F D — FIRE DAMPER
- GRAVITY DAMPER
- OPPOSED BLADE DAMPER
- PARALLEL BLADE DAMPER
- LOUVER, FIXED
- LOUVER, OPERABLE
- AIR FILTER AUTOMATIC ROLL TYPE
- FB — AIR FILTER - BAG
- FT — AIR FILTER - THROW AWAY
- FW — AIR FILTER - WASHABLE
- HUMIDIFIER
- RH — RADIANT HEATER
- UH — UNIT HEATER (E, S OR W - ELECTRIC, STEAM OR WATER)
- H — HUMIDISTAT
- T — THERMOSTAT
- SA — SOUND ABSORBER
- —L— LOUVERED DOOR
- —UC— UNDERCUT DOOR

INSTRUMENT IDENTIFICATION LETTERS

FIRST LETTER		SUCCEEDING LETTER
A	ANALYSIS	ALARM
B	BURNER FLAME	
C	CONDUCTIVITY	CONTROL
D	DENSITY	DIFFERENTIAL
E	VOLTAGE, ELECTRIC	PRIMARY ELEMENT
F	FLOW RATE	RATIO (FRACTION)
G	GAGING	GLASS
H	HAND (MANUAL)	HIGH
I	CURRENT	INDICATE, INTERMEDIATE
J	POWER	
K	TIME	CONTROL STATION
L	LEVEL	LIGHT OR LOW
M	MOISTURE, MOTOR	
N	USER'S CHOICE	
O	OXYGEN	ORIFICE
P	PRESSURE, VACUUM	TEST POINT
Q	QUANTITY OR EVENT	TOTALIZER
R	RADIOACTIVITY/ RESTRICTION	RECORD, PRINT
S	SPEED, FREQUENCY	SWITCH
T	TEMPERATURE	TRANSMITTER
U	MULTIVARIABLE	MULTIFUNCTION
V	VISCOSITY	VALVE, DAMPER
W	WEIGHT, FORCE	TEST WELL
X	UNCLASSIFIED	TRANSMITTER
Y	STATE, PRESENCE	RELAY OR COMPUTE
Z	POSITION	DRIVE

COMPUTING INSTRUMENT DESIGNATIONS

I/E	CURRENT TO VOLTAGE
E/I	VOLTAGE TO CURRENT
P/E	PNEUMATIC TO VOLTAGE
E/P	VOLTAGE TO PNEUMATIC
M/P	MOTOR TO PNEUMATIC
I/P	CURRENT TO PNEUMATIC
P/I	PNEUMATIC TO CURRENT
E/H	ELECTRO-HYDRAULIC
A/D	ANALOG TO DIGITAL
R/I	RESISTANCE TO CURRENT
AVG	AVERAGE
√	SQUARE ROOT EXTRACTOR
Σ	SUMMER
/H	HIGH SETPOINT
/L	SLOW SETPOINT

INSTRUMENT LINE SYMBOLS

- CONNECTION TO PROCESS OR INSTRUMENT SUPPLY
  - IA INSTRUMENT AIR SUPPLY
  - ES ELECTRICAL SUPPLY
  - GS GAS SUPPLY
  - HS HYDRAULIC SUPPLY
  - NS NITROGEN SUPPLY
  - SS STEAM SUPPLY
  - WS WATER SUPPLY
- PNEUMATIC SIGNAL
- ELECTRICAL SIGNAL
- CAPILLARY TUBING (FILLED SIGNAL)
- HYDRAULIC SIGNAL
- ELECTROMAGNETIC OR SONIC SIGNAL
- LOGIC/DATA LINK SIGNAL

PROCESS LINE SYMBOLS

- NEW SYSTEM OR PROCESS
- EXISTING SYSTEM OR PROCESS
- AREA LIMITATION
- BURIED PIPE

INSTRUMENTATION SYMBOLS

- LOCAL MOUNTED
- R — RACK MOUNTED
- AUXILIARY BOARD MOUNTED (• BOARD DESIGNATION)
- BOARD MOUNTED (INSIDE)
- INDICATING LIGHT (LOCAL)
- INDICATING LIGHT BOARD MOUNTED
- DCS DISPLAY (STATUS INDICATION)
- DCS SOFTWARE FUNCTION (NOT VISIBLE TO OPERATOR)
- A — ANNUNCIATOR POINT
- A — ANNUNCIATOR POINT (COMMON ALARM)
- ! — INTERLOCK (•- LOGIC DIAGRAM NO.)

MISCELLANEOUS IDENTIFICATIONS

- XX — DENOTES EQUIPMENT MANUFACTURER'S CONNECTION NUMBER
- F - N100 — DENOTES CONTRACTOR FURNISHED EQUIPMENT
  - CONTRACT NUMBER
  - ITEM CONTRACTOR FURNISHED

TO XXXX SYSTEM — CONTINUATION DRAWING REFERENCE

MXXX XXX
- IN ZONE XXX
- LINE CONTINUES ON DWG MXXX

LINE CROSS REFERENCING METHOD

- SCOPE BREAK
- CODE BREAK
- SYSTEM BREAK
- BUILDING BREAK

DESIGNATION CHANGE/BREAK

PIPING SYSTEM IDENTIFICATIONS

AC	ACID
AE	AIR EXTRACTION
AP	AIR PROCESSING
AS	AUXILIARY STEAM
BD	BLOW-OFF OR BLOWDOWN
BF	BOILER FILL
BO	BLOWOUT (TEMP)
BS	BLEED STEAM
CA	CONTROL AIR
CC	CLOSED COOLING WATER
CD	CARBON DIOXIDE
CF	CHEMICAL FEED
CH	CONDENSATE
CL	CHLORINE
CR	COLD REHEAT STEAM
CS	CAUSTIC FEED
CT	COOLING TOWER BLOWDOWN
CW	CIRCULATING WATER
DR	DRIP OR DRAIN
DW	DEMINERALIZED WATER
FD	FEEDWATER DISCHARGE
FG	FLUE GAS
FO	FUEL OIL
FP	FIRE PROTECTION
FS	FEEDWATER SUCTION
FV	EVAPORATOR FEED
GS	GLAND SEAL
HO	HYDRAULIC OIL
HR	HOT REHEAT STEAM
HS	HEATING STEAM
HV	HEATING & VENTILATING
HW	HOT WATER
HY	HYDROGEN
IA	INSTRUMENT AIR
IP	INTERMEDIATE PRESSURE STEAM
LO	LUBRICATING OIL
LP	LOW PRESSURE STEAM
MS	MAIN STEAM
MU	MAKE-UP WATER
MV	MISCELLANEOUS VENTS
NG	NATURAL GAS
NT	NITROGEN
PG	PURGE AIR
PM	PERFORMANCE MONITORING
PV	PLUMBING VENT
PW	POTABLE WATER
RD	ROOF DRAINS
RE	REFRIGERANT
RS	REHEAT SPRAY
RV	RELIEF VALVE DISCHARGE
RW	RAW WATER
SA	SERVICE AIR
SF	STEAM FEED
SL	STEAM LEAKOFF
SP	SAMPLING POINT
SS	SANITARY SEWER
SV	SAFETY VALVE DISCHARGE
SW	SERVICE WATER
TA	TURBINE AIR
TG	TURBINE GENERATOR
TO	TRANSFORMER OIL
WC	CLARIFIED WATER
WE	WELL WATER
WI	WATER INJECTION
WS	WASH WATER
WW	WASTE WATER

ABBREVIATIONS IDENTIFIED WITH HVAC

AD	ACCESS DOOR
BOD	BOTTOM OF DUCT
CD	CEILING DIFFUSER
CG	CEILING GRILLE
CR	CEILING REGISTER
EA	EXHAUST AIR
EAD	EXHAUST AIR DIFFUSER
EAR	EXHAUST AIR REGISTER
FB	FLAT BOTTOM OF DUCT
FC	FLEXIBLE CONNECTION
FT	FLAT TOP OF DUCT
IL	INTAKE LOUVER
LD	LINEAR DIFFUSER
NK	DIFFUSER NECK
OA	OUTSIDE AIR
OAI	OUTSIDE AIR INTAKE
RA	RETURN AIR
RAD	RETURN AIR DIFFUSER
RAG	RETURN AIR GRILL
RAR	RETURN AIR REGISTER
SA	SUPPLY AIR
SAD	SUPPLY AIR DIFFUSER
SAG	SUPPLY AIR GRILL
SAR	SUPPLY AIR REGISTER
SD	SPLITTER DAMPER
SG	SIDE WALL GRILLE
SR	SIDE WALL REGISTER
TRG	TRANSFER GRILLE
TRR	TRANSFER REGISTER
VAV	VARIABLE AIR VOLUME
VD	VOLUME DAMPER
VE	VOLUME EXTRACTOR
WM	WIRE MESH

ABBREVIATIONS IDENTIFIED WITH VALVES

CO	CHAIN OPERATED
FC	FAIL CLOSED
FI	FAIL INDETERMINATE
FL	FAIL LOCKED
FO	FAIL OPEN
LC	LOCKED CLOSED
LO	LOCKED OPEN
NO	NORMALLY OPEN
NC	NORMALLY CLOSED

EQUIPMENT IDENTIFICATIONS

A	AIR HANDLING UNIT PACKAGE WITH COMPONENTS
B	STEAM GENERATOR
C	HEATER, COOLER OR HEAT EXCHANGER
D	DRAIN
E	SUPPLY OR EXHAUST FAN OR GRAVITY VENTILATOR
F	FILTER OR CARTRIDGE STRAINER
G	EVAPORATOR
J	FEEDWATER HEATER
K	MECHANICAL TRANSPORTER
L	LUBRICATING OIL CONDITIONER
M	MIXER
N	REFRIGERATION EQUIPMENT
P	PUMP OR COMPRESSOR
Q	DRYER
S	SEPARATOR
T	TANK
U	TURBINE DRIVE AND SPECIALITIES
V	VALVE (ALL TYPES
W	WATER TREATMENT EQUIPMENT
X	ENGINE OR GENERATOR
Y	MISCELLANEOUS EQUIPMENT

NOTE:
ALL INSTRUMENT AND CONTROL SYMBOLOGY CONFORMS TO ISA STANDARDS S5.1. AND S5.3. REFER TO THOSE STANDARDS FOR INSTRUMENTATION AND CONTROL SYMBOLS OR LETTERS USED AND NOT SHOWN.

NOTE:
THIS IS A CONCEPTUAL DESIGN DRAWING BASED ON THE INFORMATION AVAILABLE REGARDING THE EXISTING EQUIPMENT WHICH WILL BE REUSED AND BASED ON A CONCEPTUAL DESIGN OF THE ADDITIONAL EQUIPMENT WHICH WILL BE REQUIRED FOR THE REPOWERING PROJECT. ITS PURPOSE IS TO SERVE AS THE BASIS FOR THE BUDGETARY COST ESTIMATE AND THE PREPARATION OF TECHNICAL SPECIFICATION AND TENDER DOCUMENTS.

Rev No	Revision	Date	Dwn	Chkd	Approved Chief Engr	Rev No	Revision	Date	Dwn	Chkd	Approved Chief Engr	Rev No	Revision	Date	Dwn	Chkd	Approved Chief Engr

Drawing Control

Purpose	Approved By	Date	Released By	Date
For Information				
For Comment				
For Bid				
For Construction				

Engineering Review

Disc	Engr	Date
Mech		
Elec		
Civil		
Arch		
Instr	JM	
Dwn SH	Chkd	SL

Reviewed By

Manager-Design&Drafting

NORTH BANGKOK REPOWERING PROJECT

MECHANICAL SYMBOLS

BURNS AND ROE/POWER TECH ASSOCIATES JOINT VENTURE

Approved for Construction Date NONE

Chief MECHANICAL Engineer Scale NONE

Work Order 2350 | Drawing No M101 | Sh 2 of 3 | Rev A

2350-01/M101SH2.DGN 12-26-00

VALVE DESIGNATION

2 CR — DRV — 001

- 001 — SEQUENCE NUMBER
- DRV — VALVE IDENTIFICATION
- CR — SYSTEM IDENTIFICATION
- 2 — SEE GENERAL NOTE 13

VALVE IDENTIFICATION

AC	ALARM CHECK VALVE
CKV	CHECK VALVE
DPS	DRY PIPE SPRINKLER VALVE
DRV	DRAIN VALVE
DV	DELUGE VALVE
ISV	ISOLATION VALVE
PIV	POST INDICATOR VALVE
RTV	ROOT VALVE
SHV	SHUTOFF VALVE
SMV	SAMPLE VALVE
VTV	VENT VALVE

PIPING DESIGNATION

3" CR — 1 — AAA

- AAA — PIPE SPECIFICATION CODE
- 1 — SEQUENCE NUMBER
- CR — SYSTEM IDENTIFICATION
- 3" — LINE SIZE

PIPING SPECIFICATION CODES

CODE*	PIPE CLASS	CODE TITLE
AAA	150-1	150 CLASS CARBON STEEL LINES-400 F AND BELOW (WATER, AIR, GAS), ASME B31.1
ABA	150-1	150 CLASS CARBON STEEL LINES-UP TO 750 F (WATER, AIR, GAS, STEAM), ASME B31.1
ACA	150-1	150 CLASS CARBON STEEL LINES-UP TO 750 F (OIL), ASME B31.1
BAA	300-1	300 CLASS CARBON STEEL LINES-400 F AND BELOW (WATER, AIR, GAS), ASME B31.1
BBA	300-1	300 CLASS CARBON STEEL LINES-UP TO 750 F (WATER, AIR, GAS, STEAM), ASME B31.1
BBB	300-1	300 CLASS CARBON STEEL LINES-UP TO 750 F (WATER, AIR, GAS, STEAM), ASME SEC. 1
BZA	300-1	300 CLASS GALVANIZED CARBON STEEL LINES-UP TO 550 F, ASME B31.1
BCA	300-1	300 CLASS CARBON STEEL LINES-UP TO 750 F (OIL), ASME B31.1
CBA	400-1	400 CLASS CARBON STEEL LINES-UP TO 750 F, ASME B31.1
DBA	600-1	600 CLASS CARBON STEEL LINES-UP TO 750 F, ASME B31.1
EBA	900-1	900 CLASS CARBON STEEL LINES-UP TO 750 F, ASME B31.1
FBA	1500-1	1500 CLASS CARBON STEEL LINES-UP TO 750 F, ASME B31.1
GBA	2500-1	2500 CLASS CARBON STEEL LINES-UP TO 750 F, ASME B31.1
BDA	300-2	300 CLASS ALLOY STEEL LINES(1 1/4 CR-1/2 MO)-UP TO 1000F, ASME B31.1
CDA	400-2	400 CLASS ALLOY STEEL LINES(1 1/4 CR-1/2 MO)-UP TO 1000F, ASME B31.1
DDA	600-2	600 CLASS ALLOY STEEL LINES(1 1/4 CR-1/2 MO)-UP TO 1000F, ASME B31.1
EDA	900-2	900 CLASS ALLOY STEEL LINES(1 1/4 CR-1/2 MO)-UP TO 1000F, ASME B31.1
EEA	900-3	900 CLASS ALLOY STEEL LINES(2 1/4 CR-1/2 MO)-UP TO 1100F, ASME B31.1
FEA	1500-3	1500 CLASS ALLOY STEEL LINES(2 1/4 CR-1/2 MO)-UP TO 1100F, ASME B31.1
GEA	2500-3	2500 CLASS ALLOY STEEL LINES(2 1/4 CR-1/2 MO)-UP TO 1100F, ASME B31.1
HEA	4500-3	4500 CLASS ALLOY STEEL LINES (2 1/4 CR-1MO)-UP TO 1100 F, ASME B31.1
AGA	150-4	150 CLASS STAINLESS STEEL LINES (304)-UP TO 1000 F, ASME B31.1
BGA	300-4	300 CLASS STAINLESS STEEL LINES (304)-UP TO 1000 F, ASME B31.1
CGA	400-4	400 CLASS STAINLESS STEEL LINES (304)-UP TO 1000 F, ASME B31.1
DGA	600-4	600 CLASS STAINLESS STEEL LINES (304)-UP TO 1000 F, ASME B31.1
EGA	900-4	900 CLASS STAINLESS STEEL LINES (304)-UP TO 1000 F, ASME B31.1
FGA	1500-4	1500 CLASS STAINLESS STEEL LINES (304)-UP TO 1000 F, ASME B31.1
MKA	125-5	125 CLASS CAST IRON LINES, ASME B31.1
QKA	250-5	250 CLASS CAST IRON LINES, ASME B31.1
AYA	150-6	150 CLASS COALTAR ENAMEL LINED STEEL LINES-UP TO 90 F, ASME B31.1
AXA	150-7	150 CLASS SARAN LINED STEEL LINES-UP TO 200 F, ASME B31.1
AVA	150-8	150 CLASS STAINLESS STEEL LINES (316L)-UP TO 850 F, ASME B31.1
BVA	300-8	300 CLASS STAINLESS STEEL LINES (316L)-UP TO 850 F, ASME B31.1
AJA	150-9	150 CLASS STAINLESS STEEL LINES (316)-UP TO 850 F, ASME B31.1
AWA	150-10	150 CLASS STAINLESS STEEL LINES (ALLOY 20)-UP TO 300 F, ASME B31.1
MLF	125-11	125 CLASS DUCTILE IRON LINES-UP TO 80 F, AWWA
QMF	250-11	DUCTILE IRON PRESSURE PIPE-UP TO 100 F, AWWA
AOA	150-12	150 CLASS CARBON STEEL LINES (FIRE PROTECTION ONLY), ASME B31.1
QNF	250-12	250 CLASS DUCTILE IRON PRESSURE PIPE-UP TO 100 F, (FIRE PROTECTION SYSTEMS)
APA	150-13	150 CLASS POLYPROPYLENE LINED CARBON STEEL LINES-UP TO 225 F
GFA	2500-14	2500 CLASS ALLOY STEEL LINES (9CR-1MO-V)-UP TO 1100 F, ASME B31.1
GFB	2500-14	2500 CLASS ALLOY STEEL LINES (9CR-1MO-V)-UP TO 1100 F, ASME SEC. 1
HFA	4500-14	4500 CLASS ALLOY STEEL LINES (9CR-1MO-V)-UP TO 1100 F, ASME B31.1
EHA	900-15	STAINLESS STEEL TUBING (304) UP TO 1200 F
AQF	150-16	FIBERGLASS REINFORCED PLASTIC PIPE (FRP)-UP TO 225 F
BZA	300-17	300 CLASS GALVANIZED CARBON STEEL LINES-UP TO 550 F
BIA	300-18	300 CLASS STAINLESS STEEL LINES (304L)-UP TO 850 F
ARA	150-19	150 CLASS COPPER TUBING-UP TO 400 F, ASME B31.1
AAF	150-20	150 CLASS CARBON STEEL LINES-LARGE BORE SPIRAL WELD PIPE, ASME B31.1
ASF	150-25	PVC PIPING, AWWA
AUF	150-26	CPVC PIPING, AWWA
ATF	150-27	PVC PIPING(PRESSURE PIPING), AWWA

* SEE FOLLOWING TABLES FOR CODE DESCRIPTION

CODE FIRST LETTER-PRESSURE CLASS

A	150 CLASS
B	300 CLASS
C	400 CLASS
D	600 CLASS
E	900 CLASS
F	1500 CLASS
G	2500 CLASS
H	4500 CLASS
I	25 AWWA (OR MANUFACTURER'S STANDARD)
J	50 WOG
K	75 (MANUFACTURER'S RATING)
L	100 (MANUFACTURER'S RATING)
M	125 ANSI B16.1 (CAST IRON)
N	150 ANSI B16.24 (BRONZE)
O	175 UNDERWRITER'S LAB
P	200 (MANUFACTURER'S RATING)
Q	250 ANSI B16.1
R-Z	AVAILABLE FOR ADDITIONAL PRESSURE CLASS
1-9	PROJECT SPECIFIC PRESSURE CLASS

CODE SECOND LETTER-PRESSURE-MATERIAL

A	CARBON STEEL LINES-400°F AND BELOW WATER, AIR, GAS)
B	CARBON STEEL LINES-UP TO 750°F(WATER, AIR, GAS, STEAM)
C	CARBON STEEL LINES(OIL)
D	ALLOY STEEL LINES-UP TO 1000°F(P11:1.25 CR-0.5 MO)
E	ALLOY STEEL LINES-UP TO 1100°F(P22:2.25 CR-1.0 MO)
F	ALLOY STEEL LINES-UP TO 1100°F(P91:9.0 CR-0.5 MO)
G	STAINLESS STEEL LINES (304)-UP TO 1000°F
H	STAINLESS STEEL TUBING (304)-UP TO 1200°F
I	STAINLESS STEEL LINES (312)-UP TO 1000°F
J	STAINLESS STEEL LINES (316)-UP TO 850°F
K	CAST IRON LINES
L	DUCTILE IRON LINES-UP TO 80°F
M	DUCTILE IRON LINES-UP TO 100°F(PRESSURE PIPING)
N	DUCTILE IRON LINES-UP TO 100°F(FIRE PROTECTION PIPING)
O	CARBON STEEL ABOVE GROUND FIRE PROTECTION LINES
P	POLYPROPYLENE LINED CARBON STEEL LINES-UP TO 225°F
Q	FIBERGLASS REINFORCED PLASTIC(FRP)LINES-UP TO 225°F
R	COPPER TUBING-UP TO 400°F
S	POLYVINYL CHLORIDE (PVC)LINES-UP TO 120°F(DRAIN, WASTE, VENT)
T	POLYVINYL CHLORIDE (PVC)LINES-UP TO 120°F(PRESSURE PIPING)
U	CHLORINATED POLYVINYL CHLORIDE(CPVC)LINES-UP TO 210°F
V	STAINLESS STEEL LINES (316L) - UP TO 210°F
W	STAINLESS STEEL LINES (ALLOW 20) - UP TO 300°F
X	SARAN LINED CARBON STEEL LINES - UP TO 200°F
Y	COAL TAR ENAMEL LINED CARBON STEEL LINES - UP TO 90°F
Z	GALVANIZED CARBON STEEL LINES - UP TO 550°F
1	STAINLESS STEEL LINES (304L) - UP TO 850°F
2-9	PROJECT SPECIFIC MATERIAL

CODE THIRD LETTER - APPLICABLE CODES

A	POWER PIPING CODE, ASME B31.1
B	POWER BOILERS, ASME B&PV CODE, SECTION 1
C	NFPA-NATIONAL FIRE PROTECTION ASSOCIATION CODE
D	NATIONAL PLUMBING CODE OR APPLICABLE PLUMBING CODE
E	CHEMICAL PLANT AND PETROLEUM REFINERY PIPING CODE, ASME B31.3
F	AWWA-AMERICAN WATER WORKS ASSOCIATION
G-Z	AVAILABLE FOR ADDITIONAL PIPING CODE
1-9	PROJECT SPECIFIC PRESSURE CLASS

GENERAL NOTES

1. UNLESS OTHERWISE SPECIFIED, ALL LEVEL GLASS, LEVEL SWITCH, LEVEL CONTROLLER AND LEVEL TRANSMITTER PIPING SHALL BE 1" DIAMETER.
2. UNLESS OTHERWISE SPECIFIED, ALL STRONGBACK PIPING SHALL BE 2" DIAMETER.
3. UNLESS OTHERWISE SPECIFIED, ALL PRESSURE, FLOW AND SAMPLING INSTRUMENT ROOT VALVES SHALL BE 1" Y PATTERN GLOBE VALVES FOR 900# CLASS AND ABOVE SYSTEMS. FOR SYSTEMS 600# CLASS AND LOWER THE FOLLOWING CRITERIA SHALL BE USED:
   A. 1/2" GATE VALVES FOR SERVICE CONDITIONS NOT IN EXCESS OF EITHER 900 PSI OR 800° F.
   B. 1" GATE VALVES WHEN CONDITIONS EXCEED 900 PSI OR 800° F.
4. UNLESS OTHERWISE SPECIFIED, ALL ROOT VALVES FOR STRONGBACKS SHALL BE 2" BALL.
5. UNLESS OTHERWISE SPECIFIED, ALL VENT AND DRAIN VALVES FOR STRONGBACKS SHALL BE 1/2" GATE.
6. UNLESS OTHERWISE SPECIFIED, ALL ROOT VALVES FOR LEVEL SWITCHES AND LEVEL TRANSMITTERS SHALL BE 1" GATE FOR 600# CLASS AND LOWER AND 1" Y PATTERN GLOBE VALVES FOR 900# CLASS AND ABOVE.
7. UNLESS OTHERWISE SPECIFIED, ALL VENT AND DRAIN VALVES FOR HIGH POINT VENTS AND LOW POINT DRAINS SHALL BE AS FOLLOWS:
   A. STEAM SERVICE -3/4" GLOBE
   B. WATER AND AIR SERVICE LESS THAN 600# CLASS -3/4" BALL
   C. WATER SERVICE 600# CLASS AND ABOVE -3/4" GLOBE
8. CODE BREAKS DENOTE THE SPLIT BETWEEN ASME SECTION I AND ANSI B31.1.
9. ADDITIONAL LOW POINT DRAINS AND HIGH POINT VENTS MAY BE REQUIRED DEPENDING ON PIPING LAYOUT.
10. DRAINS SHALL TERMINATE WITH 6" NIPPLE.
11. RELIEF VALVE DRIP PAN /SILENCER DRAINS TO BE ROUTED TO NEAREST EQUIPMENT DRAIN/FLOOR TRENCH.
12. VALVE, EQUIPMENT, AND INSTRUMENTATION TAGS SHALL BE PREFIXED AS FOLLOWS:
    '1' - FOR ALL COMMON ITEMS AND ITEMS SPECIFIC TO HRSG/GTG NO. 1.
    '2' - FOR ALL ITEMS SPECIFIC TO HRSG/GTG NO. 2.

NOTE:
THIS IS A CONCEPTUAL DESIGN DRAWING BASED ON THE INFORMATION AVAILABLE REGARDING THE EXISTING EQUIPMENT WHICH WILL BE REUSED AND BASED ON A CONCEPTUAL DESIGN OF THE ADDITIONAL EQUIPMENT WHICH WILL BE REQUIRED FOR THE REPOWERING PROJECT. ITS PURPOSE IS TO SERVE AS THE BASIS FOR THE BUDGETARY COST ESTIMATE AND THE PREPARATION OF TECHNICAL SPECIFICATION AND TENDER DOCUMENTS.

Rev No	Revision	Date	Dwn	Chkd	Approved Chief Engr	Rev No	Revision	Date	Dwn	Chkd	Approved Chief Engr	Rev No	Revision	Date	Dwn	Chkd	Approved Chief Engr

Drawing Control

Purpose	Approved By	Date	Released By	Date
For Information				
For Comment				
For Bid				
For Construction				

Engineering Review

	Engr	Date
Elec		
Mech		
Elec		
Civil		
Arch		
Instr		
	Chkd	SL

Reviewed By

Manager-Design&Drafting

NORTH BANGKOK REPOWERING PROJECT

GENERAL NOTES

BURNS AND ROE/POWER TECH ASSOCIATES JOINT VENTURE

Approved for Construction

Chief MECHANICAL Engineer

Date	Scale	Work Order	Drawing No	Sh	Rev
	NONE	2350	M101	3 of 3	A

2350-01/M101SH3.DGN 12-26-00

NOTES

1. FOR MECHANICAL SYMBOLS AND GENERAL NOTES SEE DRAWING M003 SH1, M003 SH2 AND M003 SH3.

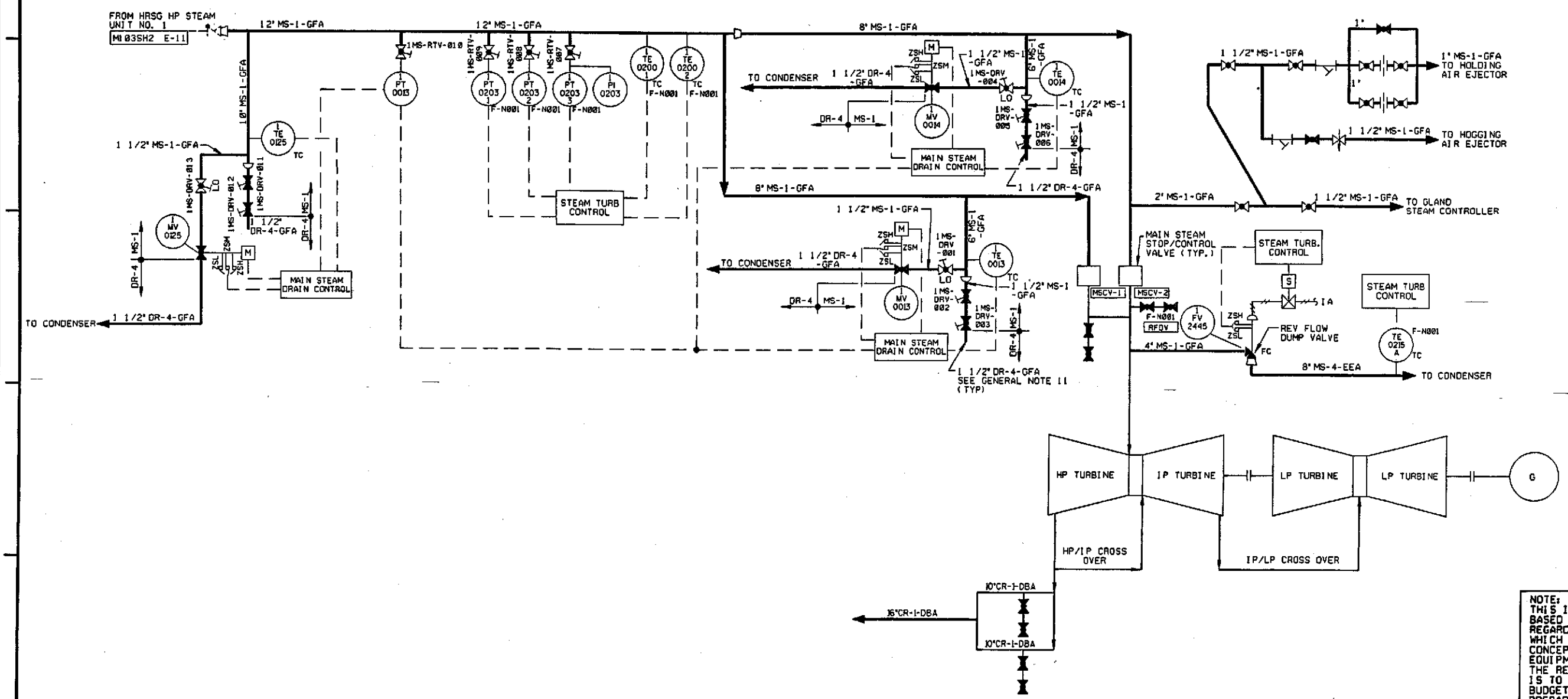

NOTE:
THIS IS A CONCEPTUAL DESIGN DRAWING BASED ON THE INFORMATION AVAILABLE REGARDING THE EXISTING EQUIPMENT WHICH WILL BE REUSED AND BASED ON A CONCEPTUAL DESIGN OF THE ADDITIONAL EQUIPMENT WHICH WILL BE REQUIRED FOR THE REPOWERING PROJECT. ITS PURPOSE IS TO SERVE AS THE BASIS FOR THE BUDGETARY COST ESTIMATE AND THE PREPARATION OF TECHNICAL SPECIFICATION AND TENDER DOCUMENTS.

Rev No	Revision	Date	Dwn	Chkd	Approved Chief Engr	Rev No	Revision	Date	Dwn	Chkd	Approved Chief Engr	Rev No	Revision	Date	Dwn	Chkd	Approved Chief Engr

Drawing Control

Purpose	Approved By	Date	Released By	Date
For Information				
For Comment				
For Bid				
For Construction				

Engineering Review

Disc	Engr	Date
Mech		
Elec		
Civil		
Arch		
Instr		

Dwn SM | Chkd SL

Reviewed By

Manager-Design&Drafting

Approved for Construction

Chief MECHANICAL Engineer

NORTH BANGKOK REPOWERING PROJECT

PIPING AND INSTRUMENTATION DIAGRAM
STEAM TURBINE MAIN STEAM

BURNS AND ROE/POWER TECH ASSOCIATES JOINT VENTURE

Date	Scale	Work Order	Drawing No	Sh	Rev
	NONE	2350	M102	1 OF 2	A

2350-01/M102SH1.DGN 12-26-0

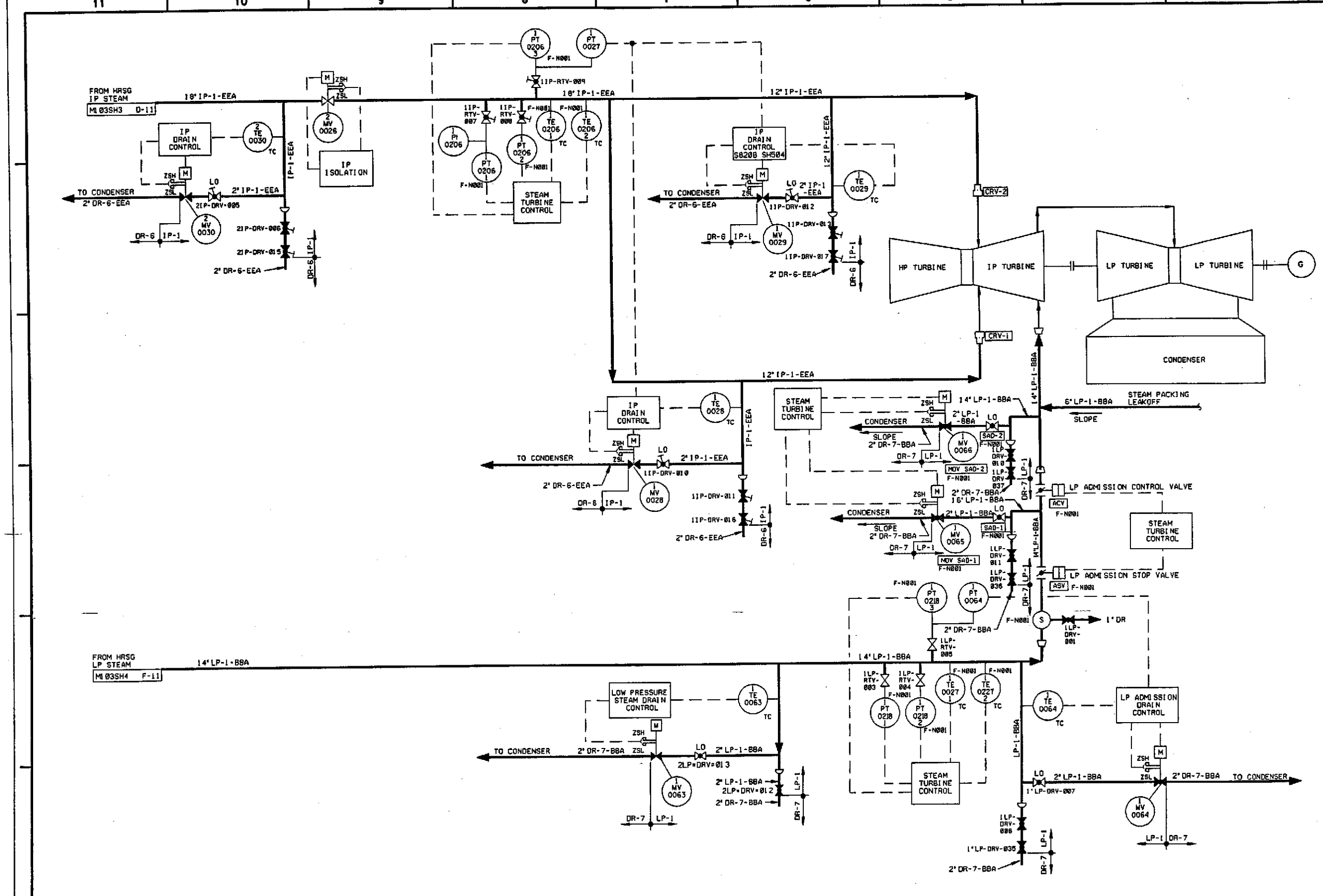

NOTES

1. FOR MECHANICAL SYMBOLS AND GENERAL NOTES SEE DRAWING M003 SH1, M003 SH2 AND M003 SH3.

NOTE:
THIS IS A CONCEPTUAL DESIGN DRAWING BASED ON THE INFORMATION AVAILABLE REGARDING THE EXISTING EQUIPMENT WHICH WILL BE REUSED AND BASED ON A CONCEPTUAL DESIGN OF THE ADDITIONAL EQUIPMENT WHICH WILL BE REQUIRED FOR THE REPOWERING PROJECT. ITS PURPOSE IS TO SERVE AS THE BASIS FOR THE BUDGETARY COST ESTIMATE AND THE PREPARATION OF TECHNICAL SPECIFICATION AND TENDER DOCUMENTS.

Rev No	Revision	Date	Dwn	Chkd	Approved Chief Engr	Rev No	Revision	Date	Dwn	Chkd	Approved Chief Engr	Rev No	Revision	Date	Dwn	Chkd	Approved Chief Engr

Drawing Control

Purpose	Approved By	Date	Released By	Date
For Information				
For Comment				
For Bid				
For Construction				

Engineering Review

Disc	Engr	Date
Mech		
Elec		
Civil		
Arch		
Instr		
Dwn SM	Chkd	SL

Reviewed By
Manager-Design&Drafting

NORTH BANGKOK REPOWERING PROJECT

PIPING AND INSTRUMENTATION DIAGRAM
STEAM TURBINE IP AND LP STEAM

BURNS AND ROE/POWER TECH ASSOCIATES
JOINT VENTURE

Approved for Construction
Chief MECHANICAL Engineer

Date
Scale NONE
Work Order 2350
Drawing No M102
Sh 2 OF 2
Rev A

2350-01/M102SH2.DGN 12-26-0

NOTES

1. FOR MECHANICAL SYMBOLS AND GENERAL NOTES SEE DRAWING M003 SH1, M003 SH2 AND M003 SH3.
2. ASME/ANSI B31.1 CODE BOUNDARIES FOR SAMPLING, CHEMICAL FEED, N2, VENTS AND DRAINS PER ASME B&PV CODE SECTION I PARAGRAPH PG-58.3.1.
3. ONLY INSTRUMENT ROOT VALVES ARE SHOWN. VENTS, DRAINS, 3 OR 5 VALVE MANIFOLDS ARE PROVIDED AS REQUIRED BUT NOT SHOWN.
4. THERMOWELLS INSTALLATION BY HRSG SUPPLIER. TEMPERATURE ELEMENTS FOR EXHAUST GAS AND METAL BY HRSG SUPPLIER. OTHER TEMPERATURE ELEMENTS NOT BY HRSG SUPPLIER UNLESS OTHERWISE NOTED.
5. RELIEF VALVES TO BE PROVIDED WITH SILENCERS.
6. HORIZONTAL HRSG SHOWN APPLIES ALSO FOR VERTICAL HRSG DESIGN.

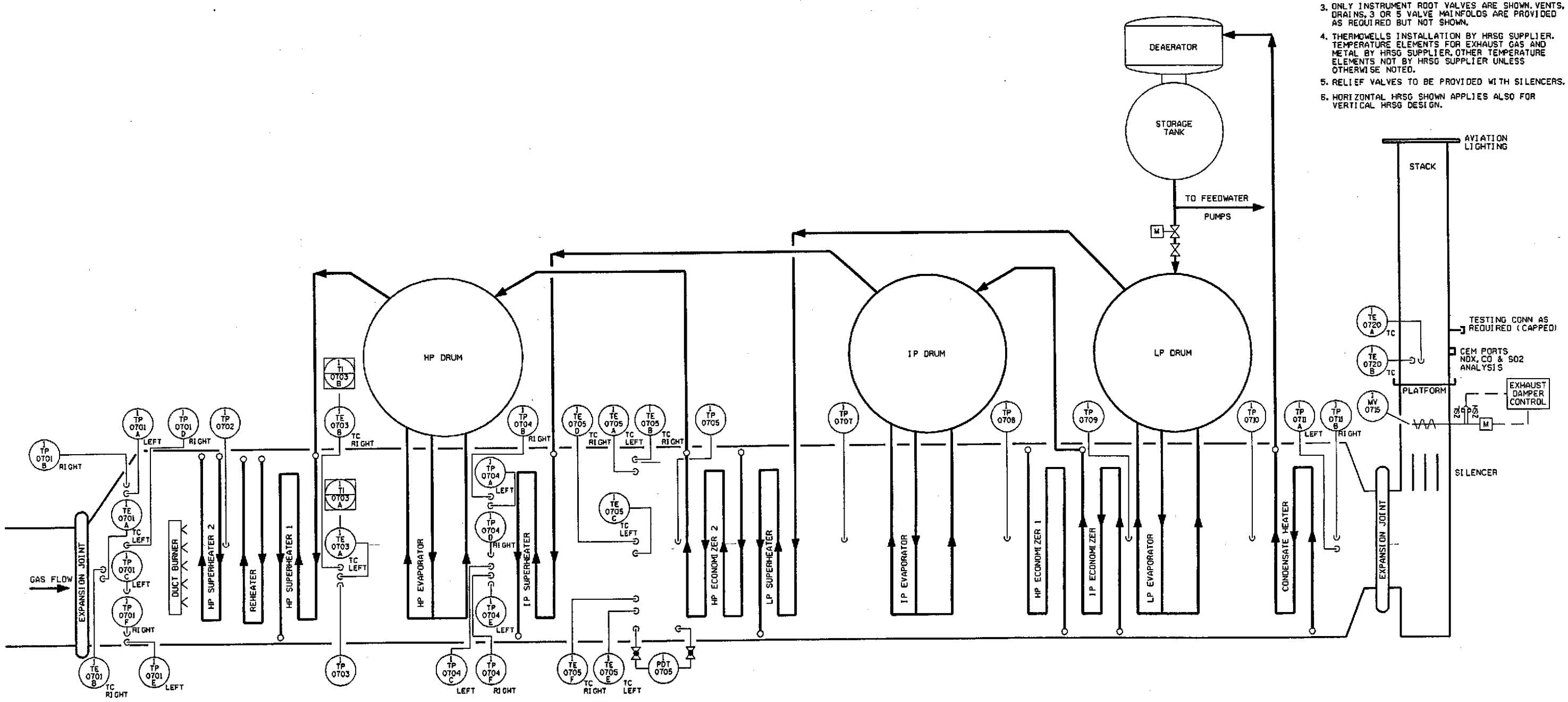

NOTE:
THIS IS A CONCEPTUAL DESIGN DRAWING BASED ON THE INFORMATION AVAILABLE REGARDING THE EXISTING EQUIPMENT WHICH WILL BE REUSED AND BASED ON A CONCEPTUAL DESIGN OF THE ADDITIONAL EQUIPMENT WHICH WILL BE REQUIRED FOR THE REPOWERING PROJECT. ITS PURPOSE IS TO SERVE AS THE BASIS FOR THE BUDGETARY COST ESTIMATE AND THE PREPARATION OF TECHNICAL SPECIFICATION AND TENDER DOCUMENTS.

Rev No	Revision	Date	Dwn	Chkd	Approved Chief Engr

Drawing Control				
Purpose	Approved By	Date	Released By	Date
For Information				
For Comment				
For Bid				
For Construction				

Engineering Review		
Disc	Engr	Date
Mech		
Elec		
Civil		
Arch		
Instr		
Dwn SU	Chkd	SL
Reviewed By		
Manager-Design&Drafting		

NORTH BANGKOK REPOWERING PROJECT

PIPING AND INSTRUMENTATION DIAGRAM
HRSG EXHAUST SYSTEM

BURNS AND ROE/POWER TECH ASSOCIATES
JOINT VENTURE

Approved for Construction
Chief MECHANICAL Engineer

Date	Work Order	Drawing No	Sh	Rev
Scale NONE	2350	M103	1 OF 4	A

2350-01/M03SH1.DGN 12-26-00

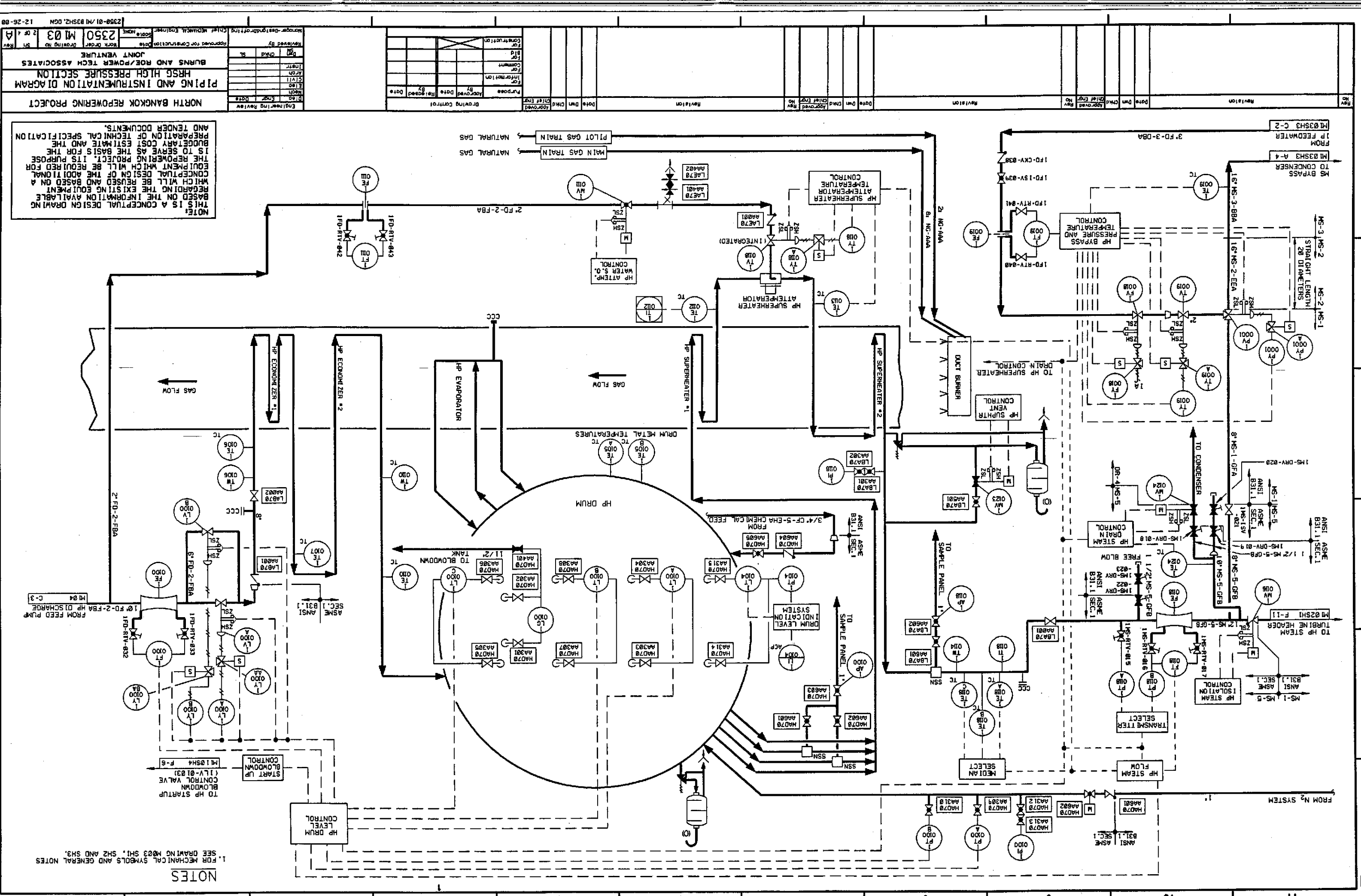
NORTH BANGKOK REPOWERING PROJECT
PIPING AND INSTRUMENTATION DIAGRAM
HRSG HIGH PRESSURE SECTION
BURNS AND ROE/POWER TECH ASSOCIATES
JOINT VENTURE
2350
M103
NOTE:
THIS IS A CONCEPTUAL DESIGN DRAWING BASED ON THE INFORMATION AVAILABLE REGARDING THE EXISTING EQUIPMENT WHICH WILL BE REUSED AND BASED ON A CONCEPTUAL DESIGN OF THE ADDITIONAL EQUIPMENT WHICH WILL BE REQUIRED FOR THE REPOWERING PROJECT. ITS PURPOSE IS TO SERVE AS THE BASIS FOR THE BUDGETARY COST ESTIMATE AND THE PREPARATION OF TECHNICAL SPECIFICATION AND TENDER DOCUMENTS.
NOTES
1. FOR MECHANICAL SYMBOLS AND GENERAL NOTES SEE DRAWING M003 SH1, SH2 AND SH3.
HP DRUM
HP EVAPORATOR
HP ECONOMIZER #1
HP ECONOMIZER #2
HP SUPERHEATER #1
HP SUPERHEATER #2
HP SUPERHEATER ATTEMPERATOR
HP SUPERHEATER ATTEMPERATURE CONTROL
HP ATTEMP. WATER S.O. CONTROL
HP BYPASS PRESSURE AND TEMPERATURE CONTROL
HP SUPHTR VENT CONTROL
TO HP SUPERHEATER DRAIN CONTROL
DUCT BURNER
HP STEAM DRAIN CONTROL
HP STEAM ISOLATION CONTROL
HP STEAM FLOW
TRANSMITTER SELECT
MEDIAN SELECT
HP DRUM LEVEL CONTROL
START UP BLOWDOWN CONTROL
DRUM LEVEL INDICATION SYSTEM
DRUM METAL TEMPERATURES
GAS FLOW
MAIN GAS TRAIN
PILOT GAS TRAIN
NATURAL GAS
TO CONDENSER
TO HP STEAM TURBINE HEADER
FROM HP FEEDWATER
FROM N2 SYSTEM
TO SAMPLE PANEL
FROM FEED PUMP
TO HP STARTUP BLOWDOWN CONTROL VALVE (1LV-0103)
TO BLOWDOWN TANK
FROM 3/4" CF-5-EHA CHEMICAL FEED
MS BYPASS TO CONDENSER
FROM HP FEEDWATER
STRAIGHT LENGTH 20 DIAMETERS
FREE BLOW
HP STEAM DRAIN CONTROL

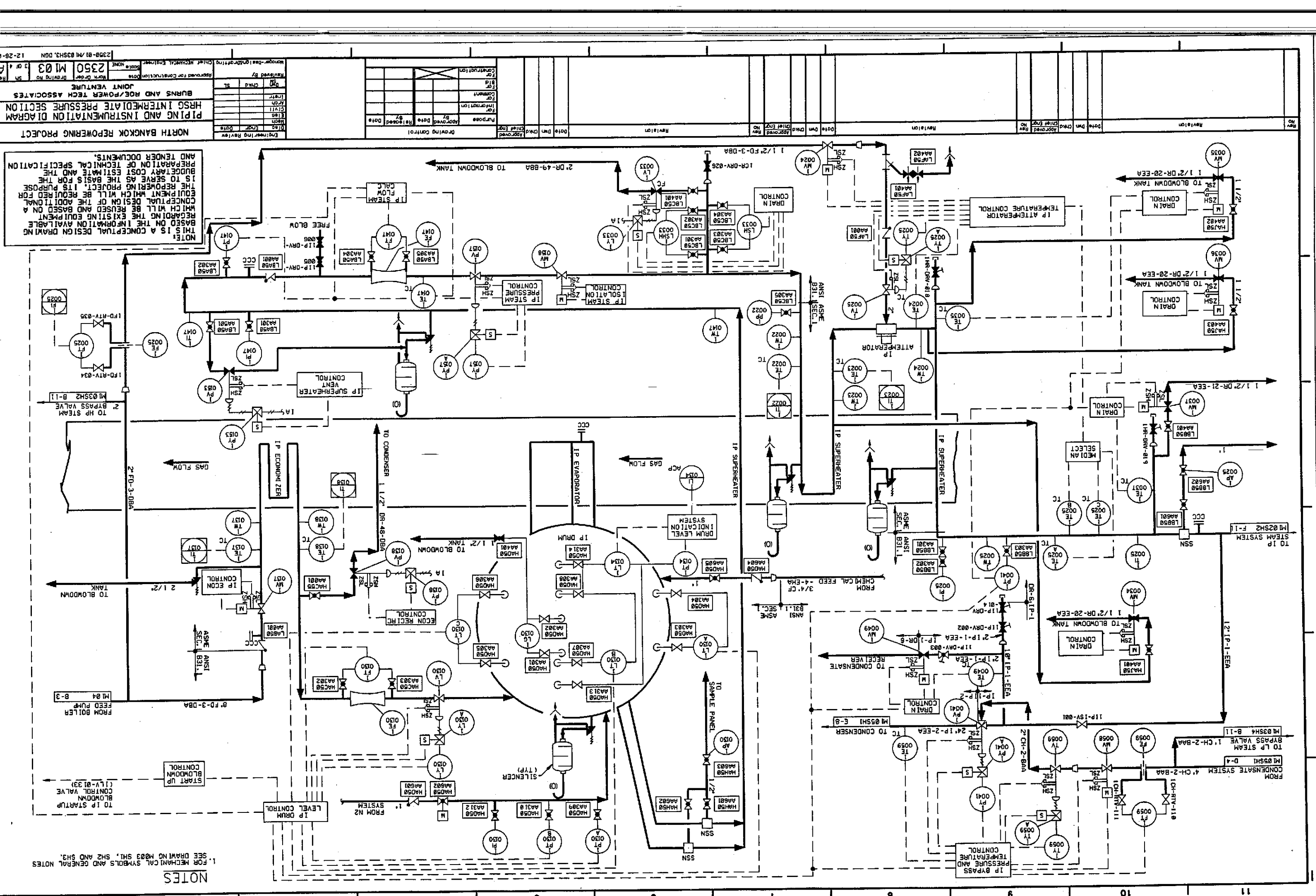
NORTH BANGKOK REPOWERING PROJECT
PIPING AND INSTRUMENTATION DIAGRAM
HRSG INTERMEDIATE PRESSURE SECTION
BURNS AND ROE/POWER TECH ASSOCIATES
JOINT VENTURE
2350
M103
NOTE:
THIS IS A CONCEPTUAL DESIGN DRAWING BASED ON THE INFORMATION AVAILABLE REGARDING THE EXISTING EQUIPMENT WHICH WILL BE REUSED AND BADED ON A CONCEPTUAL DESIGN OF THE ADDITIONAL EQUIPMENT WHICH WILL BE REQUIRED FOR THE REPOWERING PROJECT. ITS PURPOSE BUDGETARY COST ESTIMATE AND THE BIDDER TO SERVE AS THE BASIS FOR THE PREPARATION OF TECHNICAL SPECIFICATION AND TENDER DOCUMENTS.
NOTES
1. FOR MECHANICAL SYMBOLS AND GENERAL NOTES SEE DRAWING M003 SH1, SH2 AND SH3.
IP STEAM FLOW CALC
IP STEAM PRESSURE CONTROL
IP STEAM ISOLATION CONTROL
IP SUPERHEATER VENT CONTROL
IP ECONOMIZER
IP EVAPORATOR
IP DRUM
IP SUPERHEATER
IP ATTEMPERATOR
IP ATTEMPERATURE TEMPERATURE CONTROL
IP BYPASS PRESSURE AND TEMPERATURE CONTROL
IP DRUM LEVEL CONTROL
START UP BLOWDOWN CONTROL
ECON RECIRC CONTROL
DRUM LEVEL INDICATION SYSTEM
MEDIAN SELECT
DRAIN CONTROL
TO BLOWDOWN TANK
TO CONDENSER
TO CONDENSATE RECEIVER
TO SAMPLE PANEL
SILENCER (TYP)
FROM N2 SYSTEM
FROM CHEMICAL FEED
FROM BOILER FEED PUMP
TO HP STEAM 2" BYPASS VALVE
TO IP STEAM SYSTEM
TO LP STEAM BYPASS VALVE
FROM CONDENSATE SYSTEM
TO IP STARTUP BLOWDOWN CONTROL VALVE (1LV-0133)
GAS FLOW
FREE BLOW
ANSI ASME B31.1 SEC.1

NOTES

1. FOR MECHANICAL SYMBOLS AND GENERAL NOTES SEE DRAWING M003 SH1, SH2 AND SH3.

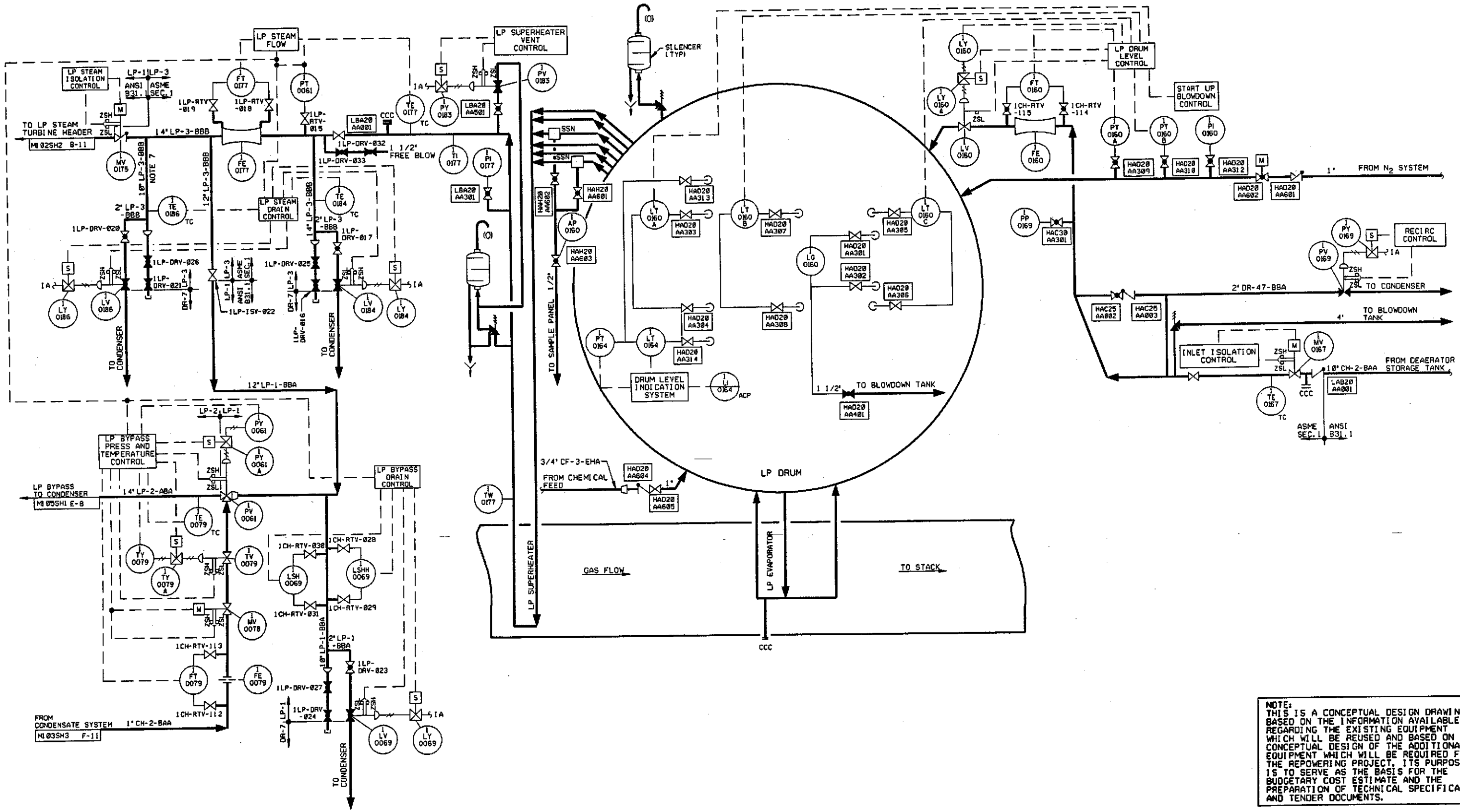

NOTE:
THIS IS A CONCEPTUAL DESIGN DRAWING BASED ON THE INFORMATION AVAILABLE REGARDING THE EXISTING EQUIPMENT WHICH WILL BE REUSED AND BASED ON A CONCEPTUAL DESIGN OF THE ADDITIONAL EQUIPMENT WHICH WILL BE REQUIRED FOR THE REPOWERING PROJECT. ITS PURPOSE IS TO SERVE AS THE BASIS FOR THE BUDGETARY COST ESTIMATE AND THE PREPARATION OF TECHNICAL SPECIFICATION AND TENDER DOCUMENTS.

Rev No	Revision	Date	Dwn	Chkd	Approved Chief Engr	Rev No	Revision	Date	Dwn	Chkd	Approved Chief Engr	Rev No	Revision	Date	Dwn	Chkd	Approved Chief Engr

Drawing Control

Purpose	Approved By	Date	Released By	Date
For Information				
For Comment				
For Bid				
For Construction				

Engineering Review

Disc	Engr	Date
Mech		
Elec		
Civil		
Arch		
Instr		
Dwn SW	Chkd	SL

Reviewed By: Manager-Design&Drafting

NORTH BANGKOK REPOWERING PROJECT

PIPING AND INSTRUMENTATION DIAGRAM
HRSG LOW PRESSURE SECTION

BURNS AND ROE/POWER TECH ASSOCIATES
JOINT VENTURE

Approved for Construction: Chief MECHANICAL Engineer | Date | Scale NONE | Work Order 2350 | Drawing No M103 | Sh 4 OF 4

2350-01/M103SH4.DGN 12-26-

NOTES

1. FOR MECHANICAL SYMBOLS AND GENERAL NOTES SEE DRAWING M003 SH1, M003 SH2 AND M003 SH3.

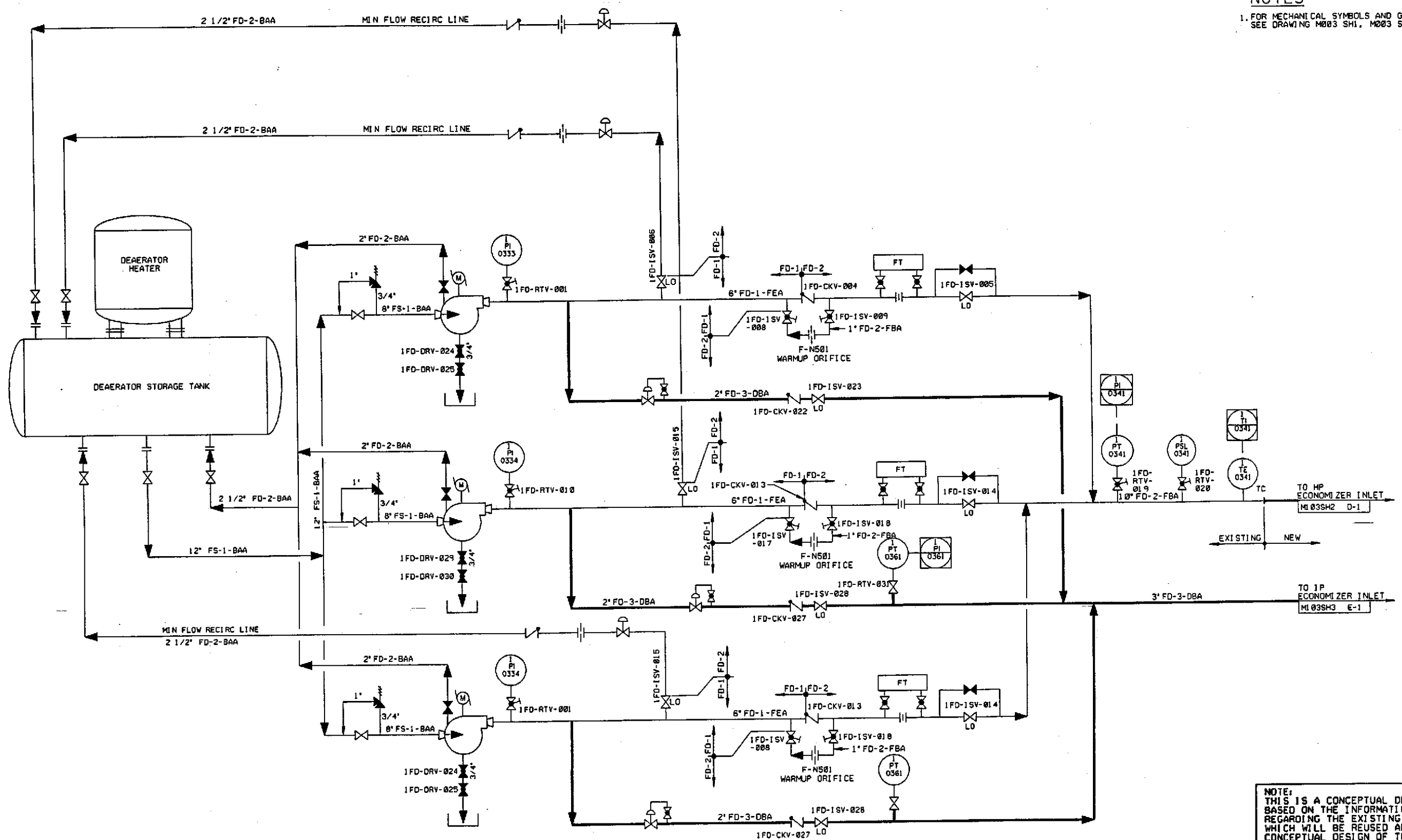

NOTE:
THIS IS A CONCEPTUAL DESIGN DRAWING BASED ON THE INFORMATION AVAILABLE REGARDING THE EXISTING EQUIPMENT WHICH WILL BE REUSED AND BASED ON A CONCEPTUAL DESIGN OF THE ADDITIONAL EQUIPMENT WHICH WILL BE REQUIRED FOR THE REPOWERING PROJECT. ITS PURPOSE IS TO SERVE AS THE BASIS FOR THE BUDGETARY COST ESTIMATE AND THE PREPARATION OF TECHNICAL SPECIFICATION AND TENDER DOCUMENTS.

Rev No	Revision	Date	Dwn	Chkd	Approved Chief Engr	Rev No	Revision	Date	Dwn	Chkd	Approved Chief Engr	Rev No	Revision	Date	Dwn	Chkd	Approved Chief Engr

Drawing Control

Purpose	Approved By	Date	Released By	Date
For Information				
For Comment				
For Bid				
For Construction				

Engineering Review

Disc	Engr	Date
Mech		
Elec		
Civil		
Arch		
Instr		

Dwn SL Chkd SL

Reviewed By

Manager-Design&Drafting

Approved for Construction

Chief MECHANICAL Engineer

NORTH BANGKOK REPOWERING PROJECT

PIPING AND INSTRUMENTATION DIAGRAM
FEEDWATER SYSTEM

BURNS AND ROE/POWER TECH ASSOCIATES
JOINT VENTURE

Date	Work Order	Drawing No	Sh	Rev
Scale NONE	2350	M104	1	A

2350-01/M104.DGN 12-12-

NOTES

1. FOR MECHANICAL SYMBOLS AND GENERAL NOTES SEE DRAWING M003 SH1, M003 SH2 AND M003 SH3.

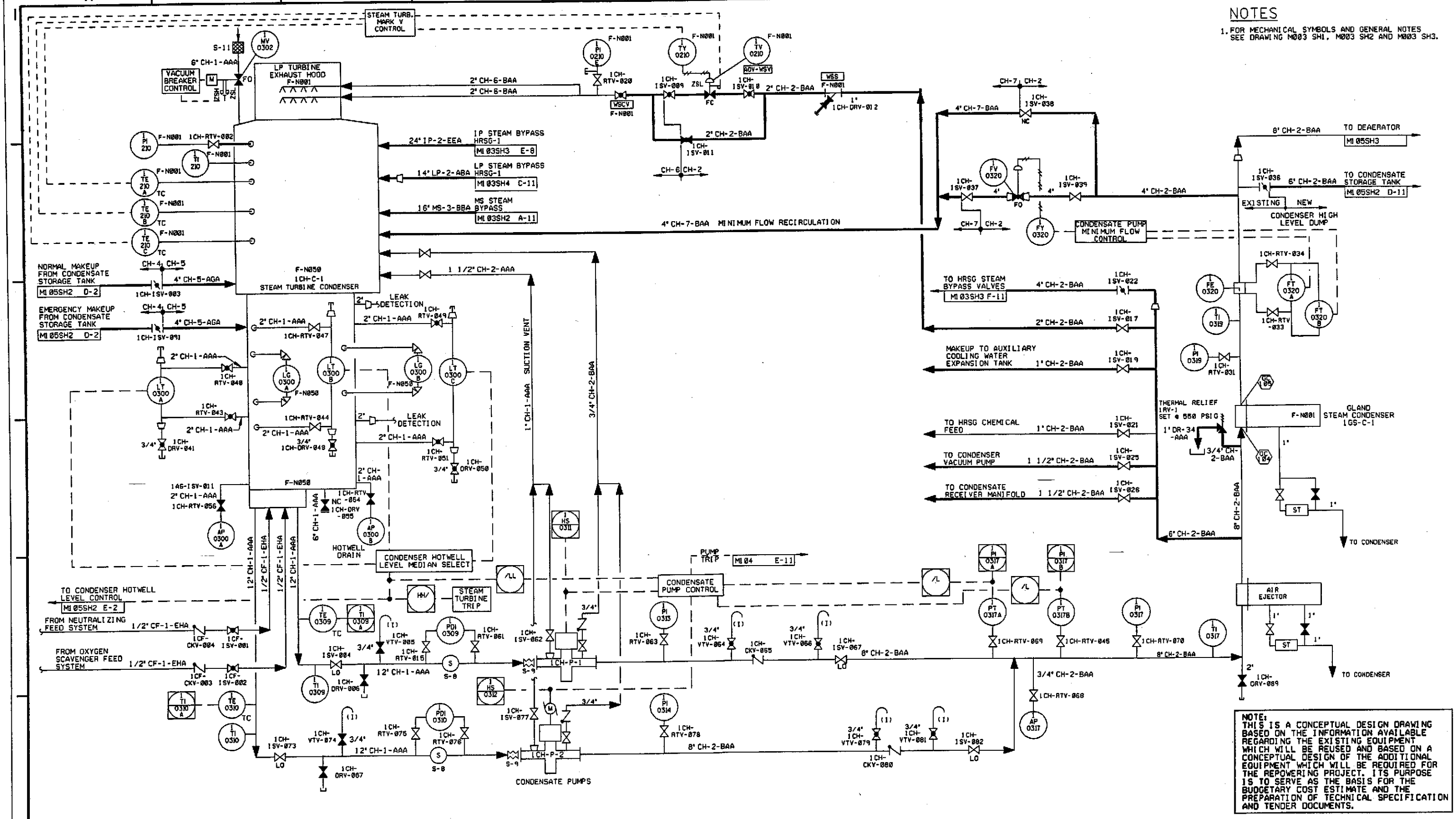

NOTE:
THIS IS A CONCEPTUAL DESIGN DRAWING BASED ON THE INFORMATION AVAILABLE REGARDING THE EXISTING EQUIPMENT WHICH WILL BE REUSED AND BASED ON A CONCEPTUAL DESIGN OF THE ADDITIONAL EQUIPMENT WHICH WILL BE REQUIRED FOR THE REPOWERING PROJECT. ITS PURPOSE IS TO SERVE AS THE BASIS FOR THE BUDGETARY COST ESTIMATE AND THE PREPARATION OF TECHNICAL SPECIFICATION AND TENDER DOCUMENTS.

Rev No	Revision	Date	Dwn	Chkd	Approved Chief Engr	Rev No	Revision	Date	Dwn	Chkd	Approved Chief Engr	Rev No	Revision	Date	Dwn	Chkd	Approved Chief Engr

Drawing Control				
Purpose	Approved By	Date	Released By	Date
For Information				
For Comment				
For Bid				
For Construction				

Engineering Review		
Disc	Engr	Date
Mech		
Elec		
Civil		
Arch		
Instr		
Dwn SM	Chkd	SL
Reviewed By		
Manager-Design&Drafting		

NORTH BANGKOK REPOWERING PROJECT

PIPING AND INSTRUMENTATION DIAGRAM
CONDENSATE SYSTEM

BURNS AND ROE/POWER TECH ASSOCIATES
JOINT VENTURE

Approved for Construction	Date	Work Order	Drawing No	Sh	Rev
Chief MECHANICAL Engineer	Scale NONE	2350	M105	1 OF 3	A

M105SH1

2350-01/M105SH1.DGN 12-26-0

NOTES

FOR MECHANICAL SYMBOLS AND GENERAL NOTES SEE DRAWING M003 SH1, M003 SH2 AND M003 SH3.

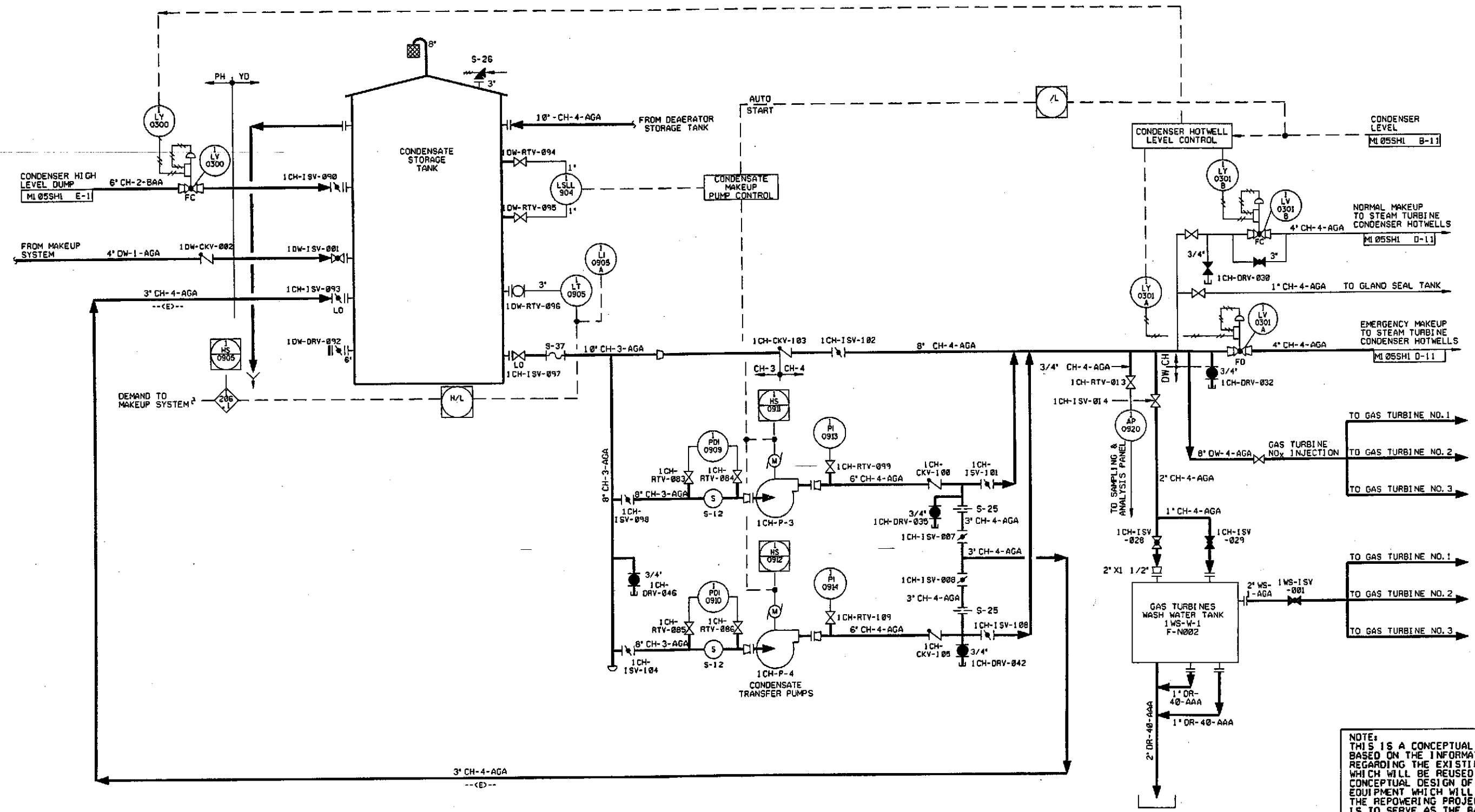

NOTE:
THIS IS A CONCEPTUAL DESIGN DRAWING BASED ON THE INFORMATION AVAILABLE REGARDING THE EXISTING EQUIPMENT WHICH WILL BE REUSED AND BASED ON A CONCEPTUAL DESIGN OF THE ADDITIONAL EQUIPMENT WHICH WILL BE REQUIRED FOR THE REPOWERING PROJECT. ITS PURPOSE IS TO SERVE AS THE BASIS FOR THE BUDGETARY COST ESTIMATE AND THE PREPARATION OF TECHNICAL SPECIFICATION AND TENDER DOCUMENTS.

Rev No	Revision	Date	Dwn	Chkd	Approved Chief Engr	Rev No	Revision	Date	Dwn	Chkd	Approved Chief Engr	Rev No	Revision	Date	Dwn	Chkd	Approved Chief Engr

Drawing Control

Purpose	Approved By	Date	Released By	Date
For Information				
For Comment				
For Bid				
For Construction				

Engineering Review

Disc	Engr	Date
Mech		
Elec		
Civil		
Arch		
Instr		

Dwn SM | Chkd | SL

Reviewed By

Manager-Design&Drafting

NORTH BANGKOK REPOWERING PROJECT

PIPING AND INSTRUMENTATION DIAGRAM
CONDENSATE SYSTEM

BURNS AND ROE/POWER TECH ASSOCIATES JOINT VENTURE

Approved for Construction | Date

Chief MECHANICAL Engineer

Scale NONE | Work Order 2350 | Drawing No M105 | Sh 2 OF 3 | Rev A

2350-01/M105SH2.DGN 12-26-0

NOTES

FOR MECHANICAL SYMBOLS AND GENERAL NOTES SEE DRAWING M003 SH1, M003 SH2 AND M003 SH3.

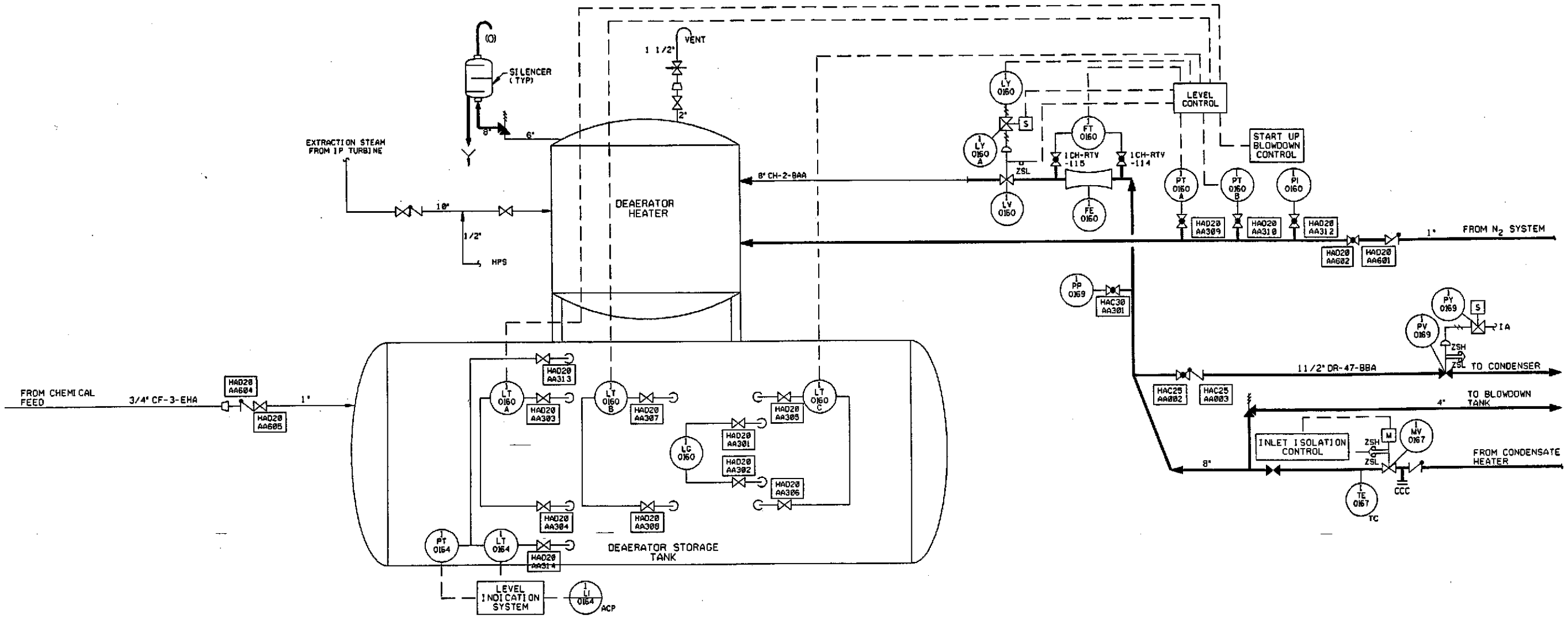

NOTE:
THIS IS A CONCEPTUAL DESIGN DRAWING BASED ON THE INFORMATION AVAILABLE REGARDING THE EXISTING EQUIPMENT WHICH WILL BE REUSED AND BASED ON A CONCEPTUAL DESIGN OF THE ADDITIONAL EQUIPMENT WHICH WILL BE REQUIRED FOR THE REPOWERING PROJECT. ITS PURPOSE IS TO SERVE AS THE BASIS FOR THE BUDGETARY COST ESTIMATE AND THE PREPARATION OF TECHNICAL SPECIFICATION AND TENDER DOCUMENTS.

Rev No	Revision	Date	Dwn	Chkd	Approved Chief Engr	Rev No	Revision	Date	Dwn	Chkd	Approved Chief Engr	Rev No	Revision	Date	Dwn	Chkd	Approved Chief Engr

Drawing Control				
Purpose	Approved By	Date	Released By	Date
For Information				
For Comment				
For Bid				
For Construction				

Engineering Review		
Disc	Engr	Date
Mech		
Elec		
Civil		
Arch		
Instr		
Dwg SM	Chkd	SL
Reviewed By		
Manager-Design&Drafting		

NORTH BANGKOK REPOWERING PROJECT

PIPING AND INSTRUMENTATION DIAGRAM
CONDENSATE SYSTEM

BURNS AND ROE/POWER TECH ASSOCIATES
JOINT VENTURE

Approved for Construction
Chief MECHANICAL Engineer

Date	Scale	Work Order	Drawing No	Sh	Rev
	NONE	2350	M105	3 OF 3	A

2350-01/M105H3.DGN 12-26-0

NOTE:
THIS IS A CONCEPTUAL DESIGN DRAWING BASED ON THE INFORMATION AVAILABLE REGARDING THE EXISTING EQUIPMENT WHICH WILL BE REUSED AND BASED ON A CONCEPTUAL DESIGN OF THE ADDITIONAL EQUIPMENT WHICH WILL BE REQUIRED FOR THE REPOWERING PROJECT. ITS PURPOSE IS TO SERVE AS THE BASIS FOR THE BUDGETARY COST ESTIMATE AND THE PREPARATION OF TECHNICAL SPECIFICATION AND TENDER DOCUMENTS.

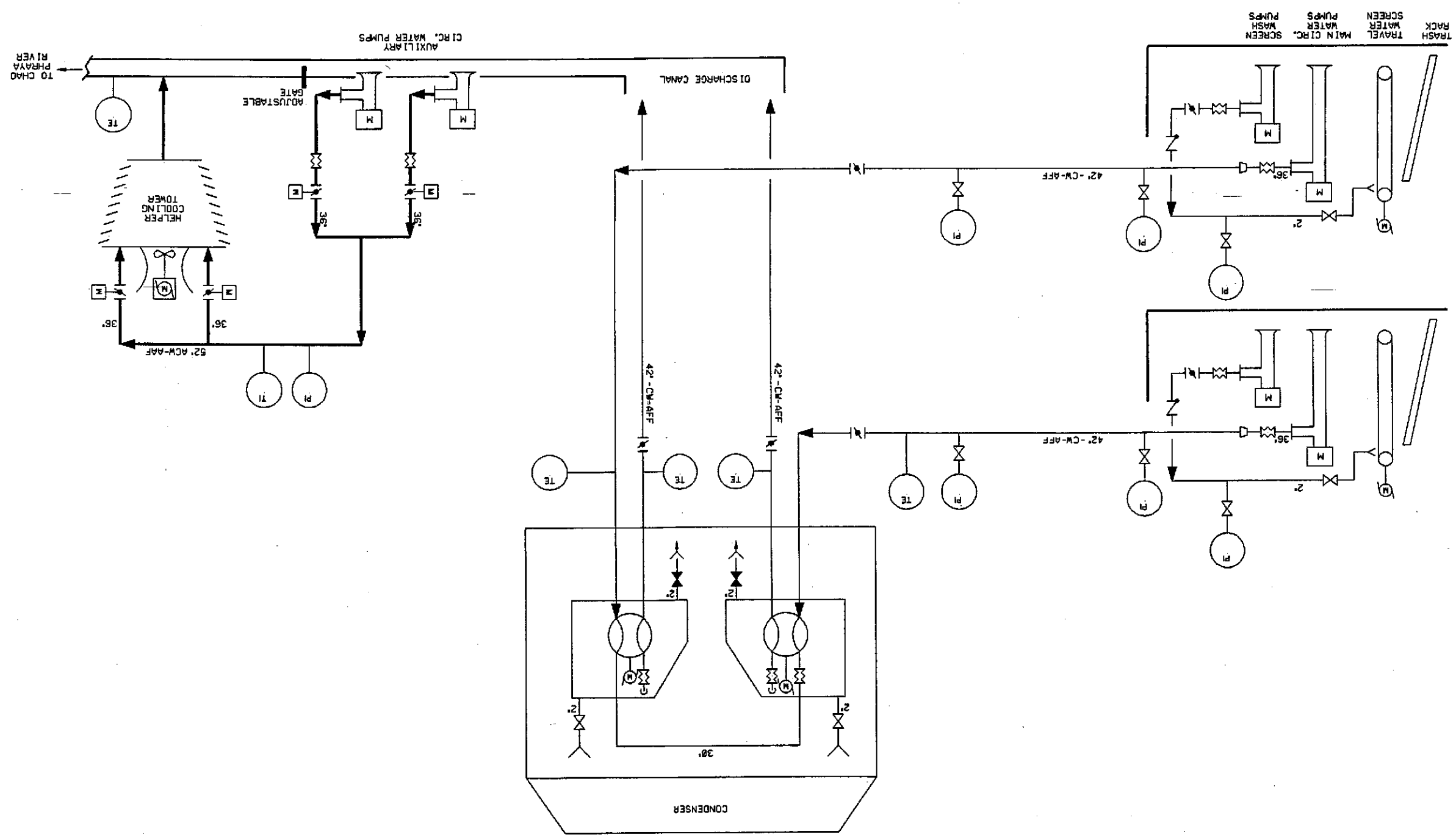

NOTES

FOR MECHANICAL SYMBOLS AND GENERAL NOTES SEE DRAWING M003 SH1, M003 SH2 AND M003 SH3.

Rev No	Revision	Date	Drn	Chkd	Approved Chief Engr	Rev No	Revision	Date	Drn	Chkd	Approved Chief Engr	Rev No	Revision	Date	Drn	Chkd	Approved Chief Engr

Drawing Control

Purpose	Approved By	Date	Reviewed By	Date
For Information				
For Comment				
For Bid				
For Construction				

Engineering Review

	Engr	Date
Mech		
Elec		
Civil		
Arch		
Instr		

NORTH BANGKOK REPOWERING PROJECT

PIPING AND INSTRUMENTATION DIAGRAM
CIRCULATING WATER SYSTEM

BURNS AND ROE/POWER TECH ASSOCIATES
JOINT VENTURE

Drawn	Chkd	SL

Reviewed By

Approved for Construction Date

Manager-Design/Drafting

Chief Mechanical Engineer

Scale NONE

Work Order 2350

Drawing No M106

Sh 1

Rev A

2350-01/M106SH1.DGN 12-21-00

NOTES

1. THE EXISTING SERVICE WATER LINES SERVING THE STEAM GENERATOR AUXILIARIES (FD FANS, GRC FANS, ID FANS, AIR PREHEATER WASH PUMP, AIR PREHEATER WILL BE TAKEN OUT OF SERVICE AND BLANKED-OFF OR DISMANTLED.

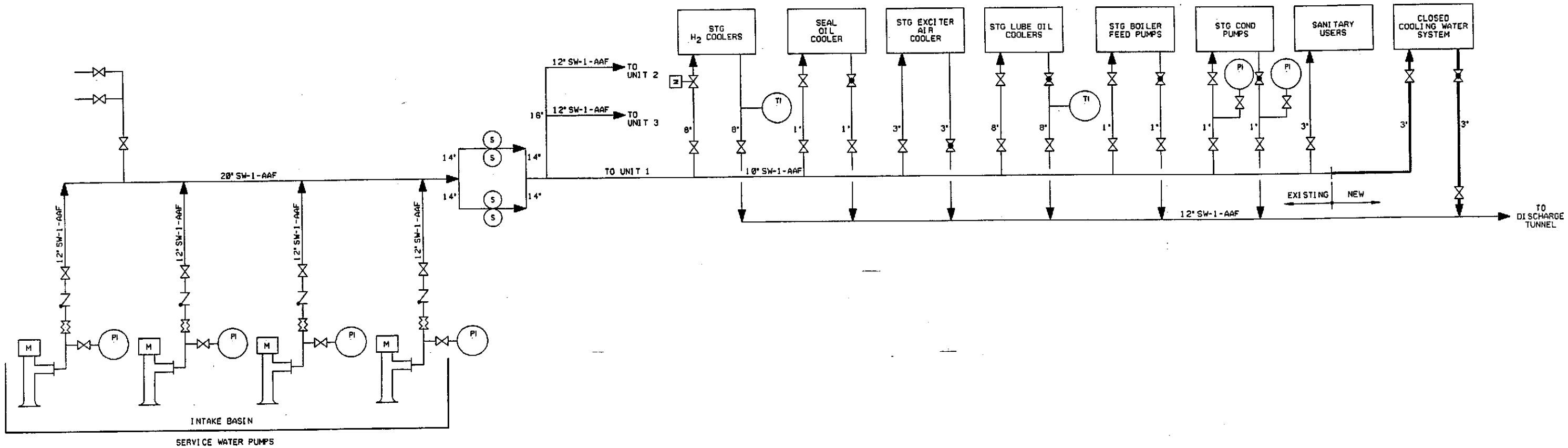

NOTE:
THIS IS A CONCEPTUAL DESIGN DRAWING BASED ON THE INFORMATION AVAILABLE REGARDING THE EXISTING EQUIPMENT WHICH WILL BE REUSED AND BASED ON A CONCEPTUAL DESIGN OF THE ADDITIONAL EQUIPMENT WHICH WILL BE REQUIRED FOR THE REPOWERING PROJECT. ITS PURPOSE IS TO SERVE AS THE BASIS FOR THE BUDGETARY COST ESTIMATE AND THE PREPARATION OF TECHNICAL SPECIFICATION AND TENDER DOCUMENTS.

Rev No	Revision	Date	Dwn	Chkd	Approved Chief Engr	Rev No	Revision	Date	Dwn	Chkd	Approved Chief Engr	Rev No	Revision	Date	Dwn	Chkd	Approved Chief Engr

Drawing Control

Purpose	Approved By	Date	Released By	Date
For Information				
For Comment				
For Bid				
For Construction				

Engineering Review

Disc	Engr	Date
Mech		
Elec		
Civil		
Arch		
Instr		

Dwn SL Chkd SL

Reviewed By

Manager-Design&Drafting

Approved for Construction

Chief MECHANICAL Engineer

NORTH BANGKOK REPOWERING PROJECT

PIPING AND INSTRUMENTATION DIAGRAM
SERVICE AND COOLING WATER SYSTEMS

BURNS AND ROE/POWER TECH ASSOCIATES
JOINT VENTURE

Date	Scale	Work Order	Drawing No	Sh	Rev
	NONE	2350	M107	1	A

2350-01/M107SH1.DGN 12-13-

APPENDIX B

Attachment 3

Water Analysis Report

For

Year 1999 and January-August 2000

ELECTRICITY GENERATING AUTHORITY OF THAILAND

NORTH BANGKOK POWER PLANT

WATER ANALYSIS REPORT

FLOCCULATION PLANT 1& 2

Source / Parameter	Raw Water			Floc.1	Floc.2		TISI. 257 - 2521	
	River	Deep Well		Clear Well	Clear Well	Drinking Water	Standards (max.)	Possible allow (max.)
		# 3	# 5					
pH	7.3	7.1	7.2	7	7.2	7.0	6.5-8.5	<9.2
Conductivity (us/cm)	275	600	600	295	305	305		
Turbidity (NTU)	58	7.7	4	0.31	6.8	0.45	5	20
Total Hardness(ppm as $CaCO_3$)	78	124	112	86	84	88	300	500
Calcium (ppm as Ca)	23.2	28	29.6	23.2	23.2	23.2		
Magnesium (ppm as Mg)	4.8	12.9	9.1	6.7	6.2	7.2		
Iron (ppm as Fe)	1.9	0.3	0.2	nil	0.1	nil	0.5	1
Chloride (ppm as Cl^-)	18	13	6	19	18	18	250	600
Sulfate (ppm as SO_4)	15.4	6.7	6.7	36.9	36.9	42.3	200	250
Silica (ppm as SiO_2)	15.7	26.4	24.6	11.2	11.2	12		
Bicarbonate (ppm as HCO_3^-)	103.5	339	347.1	81.2	81.2	81.2		
Total Alkalinity (ppm as $CaCO_3$)	85	278.4	285.1	66.7	66.7	66.7		

Remark ~~ใช้น้ำแม่น้ำเจ้าพระยาในระบบผลิตน้ำ~~ using raw water from Chaopraya River

Date of Sampling 16/8/43

TISI : Thai Industrial Standards Institute

ELECTRICITY GENERATING AUTHORITY OF THAILAND

NORTH BANGKOK POWER PLANT

WATER ANALYSIS REPORT

FLOCCULATION PLANT 1& 2

Source / Parameter	Raw Water			Floc.1	Floc.2		TISI. 257 - 2521	
	River	Deep Well		Clear	Clear	Drinking	Standards	Possible allow
		# 3	# 5	Well	Well	Water	(max.)	(max.)
pH	6.2	6.8	7.5	6.6	6.9	6.7	6.5-8.5	<9.2
Conductivity (us/cm)	270	680	660	260	270	270		
Turbidity (NTU)	97	4.7	38	0.26	3.9	1.6	5	20
Total Hardness(ppm as $CaCO_3$)	86	120	120	84	80	86	300	500
Calcium (ppm as Ca)	16.8	27.2	28	17.6	16.8	17.6		
Magnesium (ppm as Mg)	10.6	12.5	12	9.6	9.1	10.1		
Iron (ppm as Fe)	4.8	0.8	4.1	nil	0.1	nil	0.5	1
Chloride (ppm as Cl^-)	14	30	26	13	20	17	250	600
Sulfate (ppm as SO_4)	54.3	6.7	0.7	50.9	35.6	45.6	200	250
Silica (ppm as SiO_2)	11.7	29.4	16.8	10.4	10.4	9.6		
Bicarbonate (ppm as HCO_3^-)	75.1	320.7	357.3	69	83.2	77.1		
Total Alkalinity (ppm as $CaCO_3$)	61.7	263.4	293.4	56.7	68.3	63.3		

Remark ~~ใช้น้ำแม่น้ำเจ้าพระยาในระบบผลิตน้ำ~~ using raw water from Chaopraya River

Date of Sampling 26/7/43

TISI : Thai Industrial Standards Institute

ELECTRICITY GENERATING AUTHORITY OF THAILAND

NORTH BANGKOK POWER PLANT

WATER ANALYSIS REPORT

FLOCCULATION PLANT 1& 2

Source / Parameter	Raw Water			Floc.1	Floc.2		TISI: 257 - 2521	
	River	Deep Well		Clear Well	Clear Well	Drinking Water	Standards (max.)	Possible allow (max.)
		# 3	# 5					
pH	7.1	6.3	7.5	6.5	6.5	6.2	6.5-8.5	<9.2
Conductivity (us/cm)	225	675	670	240	265	265		
Turbidity (NTU)	96	23	28	0.43	2.5	1.3	5	20
Total Hardness(ppm as $CaCO_3$)	64	66	124	64	62	64	300	500
Calcium (ppm as Ca)	18.4	17.6	35.2	16	13.6	17.6		
Magnesium (ppm as Mg)	4.3	5.8	8.6	5.8	6.7	4.8		
Iron (ppm as Fe)	2.11	0.07	1.75	0.05	0.05	0.07	0.5	1
Chloride (ppm as Cl^-)	16	18	28	17	18	21	250	600
Sulfate (ppm as SO_4)	24.2	45.6	1.3	33.5	39.6	40.3	200	250
Silica (ppm as SiO_2)	15.5	14.4	28	16	14.7	14.1		
Bicarbonate (ppm as HCO_3^-)	85.2	58.8	363.3	54.8	62.9	44.6		
Total Alkalinity (ppm as $CaCO_3$)	70	48.3	298.3	45	51.6	36.6		

Remark ~~ใช้น้ำแม่น้ำเจ้าพระยาในระบบผลิตน้ำ~~ using raw water from Chaopraya River

Date of Sampling 21/6/43

TISI : Thai Industrial Standards Institute

ELECTRICITY GENERATING AUTHORITY OF THAILAND

NORTH BANGKOK POWER PLANT

WATER ANALYSIS REPORT

FLOCCULATION PLANT 1& 2

Source / Parameter	Raw Water			Floc.1	Floc.2		TISI 257 - 2521	
	River	Deep Well # 3	Deep Well # 5	Clear Well	Clear Well	Drinking Water	Standards (max.)	Possible allow (max.)
pH	7.1	6.9	7.1	6.6	6.6	6.6	6.5-8.5	<9.2
Conductivity (us/cm)	290	640	600	290	325	330		
Turbidity (NTU)	89	16	78	0.53	1.5	0.79	5	20
Total Hardness(ppm as $CaCO_3$)	84	110	106	78	84	84	300	500
Calcium (ppm as Ca)	20.8	28.8	28	20	22.4	21.6		
Magnesium (ppm as Mg)	7.7	9.1	8.6	6.7	6.7	7.2		
Iron (ppm as Fe)	4.9	1.9	4.2	nil	0.2	0.05	0.5	1
Chloride (ppm as Cl^-)	20	21	6	20	32	30	250	600
Sulfate (ppm as SO_4)	36.9	13.4	6.7	46.9	50.3	50.3	200	250
Silica (ppm as SiO_2)	14.1	35.2	28.8	13.3	14.7	12		
Bicarbonate (ppm as HCO_3^-)	95.4	341	363.3	71	79.1	71		
Total Alkalinity (ppm as $CaCO_3$)	78.3	280	298.3	58.3	65	58.3		

Remark : using raw water from Chaopraya River

Date of Sampling 24/5/43

TISI : Thai Industrial Standards Institute

ELECTRICITY GENERATING AUTHORITY OF THAILAND

NORTH BANGKOK POWER PLANT

WATER ANALYSIS REPORT

FLOCCULATION PLANT 1& 2

Analysis No. 004 / 2543

Date of Sampling 19 ~~เมษายน~~ April 2543

Date Reported ~~24 เมษายน 2543~~

Parameter \ Source	Raw Water			Floc.1	Floc.2		TISI. 257 - 2521	
	River	Deep Well # 3	Deep Well # 5	Clear Well	Clear Well	Drinking Water	Standards (max.)	Possible allow (max.)
pH	7.1	7.6	7.2	6.5	6.7	6.7	6.5-8.5	<9.2
Conductivity (us/cm)	355	570	630	360	365	360		
Turbidity (NTU)	45	18	7.1	0.4	1.3	0.4	5	20
Total Hardness(ppm as $CaCO_3$)	100	76	106	100	102	102	300	500
Calcium (ppm as Ca)	24	13.6	26.4	24.8	25.6	22.4		
Magnesium (ppm as Mg)	9.6	10.1	11	9.1	8.6	11		
Iron (ppm as Fe)	2.6	2.7	1.1	nil	nil	nil	0.5	1
Chloride (ppm as Cl^-)	23	40	5	22	27	30	250	600
Sulfate (ppm as SO_4)	80.5	22.1	16.8	70.4	60.4	57	200	250
Silica (ppm as SiO_2)	16	6.7	49.4	30.7	16	24		
Bicarbonate (ppm as HCO_3^-)	99.4	257.8	351.1	64.9	75.1	75.1		
Total Alkalinity (ppm as $CaCO_3$)	81.6	211.7	288.3	53.3	61.8	61.8		

Remark ~~ใช้น้ำแม่น้ำเจ้าพระยาในระบบผลิตน้ำ~~ using raw water from Chaopraya River

ELECTRICITY GENERATING AUTHORITY OF THAILAND

NORTH BANGKOK POWER PLANT

WATER ANALYSIS REPORT

FLOCCULATION PLANT 1& 2

Analysis No. 003 / 2543

Date of Sampling 15 ~~มีนาคม~~ March 2543

Date Reported ~~16 มีนาคม 2543~~

Source / Parameter	Raw Water			Floc.1	Floc.2		TIS 1 257 - 2521	
	River	Deep Well # 3	Deep Well # 5	Clear Well	Clear Well	Drinking Water	Standards (max.)	Possible allow (max.)
pH	7.1	7	7.1	7.1	7.2	7.2	6.5-8.5	<9.2
Conductivity (us/cm)	465	640	650	630	400	480		
Turbidity (NTU)	24	4.3	1.9	4.1	0.9	0.4	5	20
Total Hardness(ppm as $CaCO_3$)	68	110	106	110	102	106	300	500
Calcium (ppm as Ca)	23.2	26.4	24.8	28	24	24.8		
Magnesium (ppm as Mg)	2.4	10.6	10.6	9.6	10.1	10.6		
Iron (ppm as Fe)	1.2	0.8	0.4	0.3	nil	nil	0.5	1
Chloride (ppm as Cl^-)	57	16	5	6	35	37	250	600
Sulfate (ppm as SO_4)	23.5	10.1	11.4	10.1	40.3	30.2	200	250
Silica (ppm as SiO_2)	11.2	30.2	28	30.2	10.1	12.5		
Bicarbonate (ppm as HCO_3^-)	127.8	339	349.1	345.1	109.6	154.2		
Total Alkalinity (ppm as $CaCO_3$)	105	278.3	286.7	283.3	90	126.6		

Remark ~~ใช้น้ำบาดาลบ่อ 5 ในการผลิตน้ำ~~ using raw water from deep well # 5

ELECTRICITY GENERATING AUTHORITY OF THAILAND

NORTH BANGKOK POWER PLANT

WATER ANALYSIS REPORT

FLOCCULATION PLANT 1& 2

Analysis No. 002 / 2543

Date of Sampling 16 ~~กุมภาพันธ์~~ February 2543

Date Reported ~~18 กุมภาพันธ์ 2543~~

Source / Parameter	Raw Water			Floc.1	Floc.2		TISI - 257 - 2521	
	River	Deep Well # 3	Deep Well # 5	Clear Well	Clear Well	Drinking Water	Standards (max.)	Possible allow (max.)
pH	7.1	7.1	7	7.1	7.1	7.3	6.5-8.5	<9.2
Conductivity (us/cm)	7400	650	600	600	3200	600		
Turbidity (NTU)	33	5.1	1.9	3.4	2.8	1.3	5	20
Total Hardness(ppm as $CaCO_3$)	792	122	102	112	336	108	300	500
Calcium (ppm as Ca)	72	28	28	24.8	40	24.8		
Magnesium (ppm as Mg)	146.9	12.5	7.7	12	56.6	11		
Iron (ppm as Fe)	3.74	0.74	0.46	1.28	0.46	0.35	0.5	1
Chloride (ppm as Cl^-)	2265	20.1	5	7	840	6	250	600
Sulfate (ppm as SO_4)	134.2	8.05	16.1	12.07	114.07	6.71	200	250
Silica (ppm as SiO_2)	12.01	33.9	33.9	31.5	11.21	31.5		
Bicarbonate (ppm as HCO_3^-)	142.1	334.9	343.1	339	121.8	347.1		
Total Alkalinity (ppm as $CaCO_3$)	116.7	275.1	281.7	278.4	100	285.1		

Remark ~~ใช้น้ำบาดาลบ่อ 5 ในการผลิตน้ำ~~ using raw water from deep well # 5

ELECTRICITY GENERATING AUTHORITY OF THAILAND

NORTH BANGKOK POWER PLANT

WATER ANALYSIS REPORT

FLOCCULATION PLANT 1& 2

Analysis No. 001 / 2543

Date of Sampling 26 ~~มกราคม~~ January 2543

Date Reported ~~28 มกราคม 2543~~

Source / Parameter	Raw Water			Floc.1	Floc.2		TISI. 257 - 2521	
	River	Deep Well # 3	Deep Well # 5	Clear Well	Clear Well	Drinking Water	Standards (max.)	Possible allow (max.)
pH	7	6.9	6.9	6.8	6.5	6.8	6.5-8.5	<9.2
Conductivity (us/cm)	340	620	630	375	415	395		
Turbidity (NTU)	30	4.3	0.4	0.5	0.8	0.5	5	20
Total Hardness(ppm as $CaCO_3$)	92	104	106	96	100	96	300	500
Calcium (ppm as Ca)	20.8	24	25.6	20	21.6	20		
Magnesium (ppm as Mg)	9.6	10.6	10.1	11	11	11		
Iron (ppm as Fe)	2.1	0.8	0.8	0.02	0.02	nil	0.5	1
Chloride (ppm as Cl^-)	27	13	7	32	44	37	250	600
Sulfate (ppm as SO_4)	30.2	12.1	12.1	38.9	50.3	40.3	200	250
Silica (ppm as SiO_2)	16.5	33.4	30.7	20.8	13.3	15.5		
Bicarbonate (ppm as HCO_3^-)	121.8	339	361.3	107.5	83.2	97.4		
Total Alkalinity (ppm as $CaCO_3$)	100	278.3	296.7	88.3	68.3	80		

Remark ~~ใช้น้ำแม่น้ำเจ้าพระยาในระบบผลิตน้ำ~~ using raw water from Chaopraya River

ELECTRICITY GENERATING AUTHORITY OF THAILAND

NORTH BANGKOK POWER PLANT

WATER ANALYSIS REPORT

FLOCCULATION PLANT 1& 2

Analysis No. 012/2542

Date of Sampling 15 ~~ธันวาคม~~ December 2542

Date Reported ~~17 ธันวาคม 2542~~

Source / Parameter	Raw Water			Floc.1	Floc.2		TISI 257 - 2521	
	River	Deep Well		Clear Well	Clear Well	Drinking Water	Standards (max.)	Possible allow (max.)
		# 3	# 5					
pH	7.1	7	7.2	6.6	6.7	6.7	6.5-8.5	<9.2
Conductivity (us/cm)	235	610	600	240	270	265		
Turbidity (NTU)	42	8.4	130	0.7	2.5	1.4	5	20
Total Hardness(ppm as $CaCO_3$)	70	102	108	60	72	70	300	500
Calcium (ppm as Ca)	15.2	24.8	26.4	14.4	14.4	15.2		
Magnesium (ppm as Mg)	7.7	9.6	10.1	5.8	6.2	7.7		
Iron (ppm as Fe)	2.5	0.8	3.7	nil	0.1	0.1	0.5	1
Chloride (ppm as Cl^-)	15	11	6	20	21	21	250	600
Sulfate (ppm as SO_4)	10.1	14.8	17.4	26.2	26.8	26.8	200	250
Silica (ppm as SiO_2)	17.9	28	25.4	13.1	13.1	13.3		
Bicarbonate (ppm as HCO_3^-)	99.4	339	365.4	77.1	81.2	73		
Total Alkalinity (ppm as $CaCO_3$)	81.6	278.3	300	63.3	66.6	60		

Remark ~~ใช้น้ำแม่น้ำเจ้าพระยาในระบบผลิตน้ำ~~ using raw water from Chaopraya River

ELECTRICITY GENERATING AUTHORITY OF THAILAND

NORTH BANGKOK POWER PLANT

WATER ANALYSIS REPORT

FLOCCULATION PLANT 1& 2

Analysis No. 011/2542

Date of Sampling 7 ~~พฤศจิกายน~~ November 2542

Date Reported ~~18 พฤศจิกายน 2542~~

Source / Parameter	Raw Water			Floc.1	Floc.2		TISI. 257 - 2521	
	River	Deep Well # 3	Deep Well # 5	Clear Well	Clear Well	Drinking Water	Standards (max.)	Possible allow (max.)
pH	7	-	7	6.6	6.8	6.9	6.5-8.5	<9.2
Conductivity (us/cm)	190	-	650	200	235	225		
Turbidity (NTU)	45	-	54	0.4	0.9	0.7	5	20
Total Hardness(ppm as $CaCO_3$)	56	-	106	58	56	58	300	500
Calcium (ppm as Ca)	11.2	-	28	12	12.8	11.2		
Magnesium (ppm as Mg)	5.8	-	8.6	6.7	5.8	7.2		
Iron (ppm as Fe)	3	-	3.9	nil	0.1	0.1	0.5	1
Chloride (ppm as Cl^-)	11	-	7	11	11	13	250	600
Sulfate (ppm as SO_4)	15.4	-	12.1	26.8	26.8	16.8	200	250
Silica (ppm as SiO_2)	15.2	-	34.7	14.1	18.7	14.7		
Bicarbonate (ppm as HCO_3^-)	85.2	-	365.4	58.8	69	62.9		
Total Alkalinity (ppm as $CaCO_3$)	70	-	300	48.3	56.6	51.6		

Remark ~~ใช้น้ำแม่น้ำเจ้าพระยาในระบบผลิตน้ำ~~ Using raw water from Chaopraya River

~~น้ำบ่อบาดาล # 3 ไม่สามารถเก็บตัวอย่างได้~~ Raw water from deep well # 3 was not sampling

ELECTRICITY GENERATING AUTHORITY OF THAILAND

NORTH BANGKOK POWER PLANT

WATER ANALYSIS REPORT

FLOCCULATION PLANT 1& 2

Analysis No. 010/2542

Date of Sampling 13 ~~ตุลาคม~~ October 2542

Date Reported ~~19 ตุลาคม 2542~~

Source / Parameter	Raw Water			Floc.1	Floc.2		TISI. 257 - 2521	
	River	Deep Well # 3	Deep Well # 5	Clear Well	Clear Well	Drinking Water	Standards (max.)	Possible allow (max.)
pH	7.1	-	-	6.7	6.7	6.7	6.5-8.5	<9.2
Conductivity (us/cm)	205	-	-	210	245	245		
Turbidity (NTU)	52	-	-	0.6	2.6	0.9	5	20
Total Hardness(ppm as $CaCO_3$)	66	-	-	62	64	64	300	500
Calcium (ppm as Ca)	20	-	-	19.2	17.6	19.2		
Magnesium (ppm as Mg)	3.8	-	-	3.4	4.8	3.8		
Iron (ppm as Fe)	4	-	-	nil	0.2	0.1	0.5	1
Chloride (ppm as Cl^-)	11	-	-	10	13	17	250	600
Sulfate (ppm as SO_4)	10.1	-	-	22.1	36.9	40.3	200	250
Silica (ppm as SiO_2)	15.5	-	-	13.9	13.1	12.5		
Bicarbonate (ppm as HCO_3^-)	85.2	-	-	66.9	58.8	73		
Total Alkalinity (ppm as $CaCO_3$)	70	-	-	55	48.3	60		

Remark ~~ใช้น้ำแม่น้ำเจ้าพระยาในระบบผลิตน้ำ~~ using raw water from Chaopraya River

~~น้ำบ่อบาดาล # 3,# 5 ไม่สามารถเก็บตัวอย่างได้ เนื่องจากระดับน้ำแม่น้ำสูง~~

Raw water from deep well # 3, # 5 was not sampling, because river water high level

ELECTRICITY GENERATING AUTHORITY OF THAILAND

NORTH BANGKOK POWER PLANT

WATER ANALYSIS REPORT

FLOCCULATION PLANT 1& 2

Analysis No. 009/2542

Date of Sampling15 ~~กันยายน~~ September 2542

Date Reported ~~16 กันยายน 2542~~

Source / Parameter	Raw Water			Floc.1	Floc.2		TISI 257 - 2521	
	River	Deep Well		Clear Well	Clear Well	Drinking Water	Standards (max.)	Possible allow (max.)
		# 3	# 5					
pH	7.2	7.1	7.0	6.9	6.8	6.9	6.5-8.5	<9.2
Conductivity (us/cm)	215	620	620	215	245	250		
Turbidity (NTU)	71	6.3	7.9	4.3	5.1	1.5	5	20
Total Hardness(ppm as $CaCO_3$)	68	104	106	60	62	64	300	500
Calcium (ppm as Ca)	20.0	29.6	32.0	16.8	19.2	19.2		
Magnesium (ppm as Mg)	4.3	7.2	6.2	4.3	3.4	3.8		
Iron (ppm as Fe)	4.6	0.6	0.7	0.1	0.1	0.1	0.5	1
Chloride (ppm as Cl^-)	13	11	5	12	20	18	250	600
Sulfate (ppm as SO_4)	6.7	4.7	8.0	20.1	20.1	20.1	200	250
Silica (ppm as SiO_2)	16.0	38.4	38.9	10.4	11.7	10.4		
Bicarbonate (ppm as HCO_3^-)	83.2	332.9	351.1	69.0	66.9	56.8		
Total Alkalinity (ppm as $CaCO_3$)	68.3	273.3	288.3	56.6	55	46.6		

Remark ~~ใช้น้ำแม่น้ำเจ้าพระยาในระบบผลิตน้ำ~~ Using raw water from Chaepraya River

ELECTRICITY GENERATING AUTHORITY OF THAILAND

NORTH BANGKOK POWER PLANT

WATER ANALYSIS REPORT

FLOCCULATION PLANT 1& 2

Analysis No. 008/2542

Date of Sampling 18 ~~สิงหาคม~~ August 2542

Date Reported ~~19 สิงหาคม 2542~~

Parameter \ Source	Raw Water			Floc.1	Floc.2		TISI 257 - 2521	
	River	Deep Well		Clear Well	Clear Well	Drinking Water	Standards (max.)	Possible allow (max.)
		# 3	# 5					
pH	7.1	7.0	7.0	6.8	6.6	6.7	6.5-8.5	<9.2
Conductivity (us/cm)	362	620	640	382	434	430		
Turbidity (NTU)	91	5.8	3.8	1.2	1.5	0.6	5	20
Total Hardness(ppm as $CaCO_3$)	88	110	112	90	94	92	300	500
Calcium (ppm as Ca)	24.8	31.2	32.0	26.4	26.4	26.0		
Magnesium (ppm as Mg)	6.3	7.7	7.7	5.8	6.7	6.5		
Iron (ppm as Fe)	5.2	0.6	0.5	0.1	0.1	0.1	0.5	1
Chloride (ppm as Cl^-)	30	12	66	31	39	38	250	600
Sulfate (ppm as SO_4)	53.7	12.1	16.8	51.7	72.5	71.1	200	250
Silica (ppm as SiO_2)	11.7	4.0	29.4	12.3	12.0	10.4		
Bicarbonate (ppm as HCO_3^-)	93.3	332.9	351.1	87.2	81.2	66.9		
Total Alkalinity (ppm as $CaCO_3$)	76.6	273.3	288.3	71.6	66.6	55.0		

Remark ~~ใช้น้ำแม่น้ำเจ้าพระยาในระบบผลิตน้ำ~~ Using raw water from Chaopraya River

ELECTRICITY GENERATING AUTHORITY OF THAILAND

NORTH BANGKOK POWER PLANT

WATER ANALYSIS REPORT

FLOCCULATION PLANT 1& 2

Analysis No. 007/2542

Date of Sampling 14 ~~กรกฎาคม~~ July 2542

Date Reported ~~16 กรกฎาคม 2542~~

Source / Parameter	Raw Water			Floc.1	Floc.2		TISI 257 - 2521	
	River	Deep Well # 3	Deep Well # 5	Clear Well	Clear Well	Drinking Water	Standards (max.)	Possible allow (max.)
pH	6.9	7	7.1	6.4	6.3	6.5	6.5-8.5	<9.2
Conductivity (us/cm)	275	580	590	280	330	310		
Turbidity (NTU)	78	4.2	2.5	0.5	2.7	1.1	5	20
Total Hardness (ppm as $CaCO_3$)	74	106	108	70	70	66	300	500
Calcium (ppm as Ca)	20.8	30.4	32	22.4	23.2	19.2		
Magnesium (ppm as Mg)	5.3	7.2	6.2	3.4	2.9	4.3		
Iron (ppm as Fe)	4.2	0.7	0.6	nil	0.1	0.1	0.5	1
Chloride (ppm as Cl^-)	24	13	6	24	33	30	250	600
Sulfate (ppm as SO_4)	36.9	13.4	20.1	50.3	57	57	200	250
Silica (ppm as SiO_2)	13.9	30.2	30.2	11.2	11.2	11.2		
Bicarbonate (ppm as HCO_3^-)	83.2	339	351.1	62.9	54.8	50.7		
Total Alkalinity (ppm as $CaCO_3$)	68.3	278.3	288.3	51.6	45	41.6		

Remark ~~ใช้น้ำแม่น้ำเจ้าพระยาในระบบผลิตน้ำ~~ using raw water from Chaopraya River

ELECTRICITY GENERATING AUTHORITY OF THAILAND

NORTH BANGKOK POWER PLANT

WATER ANALYSIS REPORT

FLOCCULATION PLANT 1& 2

Analysis No. 006/2542

Date of Sampling 16 ~~มิถุนายน~~ June 2542

Date Reported ~~17 มิถุนายน 2542~~

Source / Parameter	Raw Water			Floc.1	Floc.2		TISI. 257 - 2521	
	River	Deep Well		Clear Well	Clear Well	Drinking Water	Standards (max.)	Possible allow (max.)
		# 3	# 5					
pH	6.9	7.2	7.1	6.5	6.5	6.6	6.5-8.5	<9.2
Conductivity (us/cm)	275	680	630	290	340	315		
Turbidity (NTU)	98	6.4	3.9	1.4	0.6	6.6	5	20
Total Hardness(ppm as $CaCO_3$)	70	124	112	72	76	76	300	500
Calcium (ppm as Ca)	23.6	36.8	32.8	23.6	23.6	23.6		
Magnesium (ppm as Mg)	2.6	7.7	7.2	3.8	4.1	4.1		
Iron (ppm as Fe)	6.6	1.1	1.2	0.1	0.2	0.2	0.5	1
Chloride (ppm as Cl^-)	19	5	5	21	28	24	250	600
Sulfate (ppm as SO_4)	53.7	14.8	16.8	59	63.7	63.7	200	250
Silica (ppm as SiO_2)	15.5	41.4	44.6	14.4	14.1	13.3		
Bicarbonate (ppm as HCO_3^-)	81.2	334.9	353.2	60.9	64.9	64.9		
Total Alkalinity (ppm as $CaCO_3$)	66.6	275	290	50	53.3	53.3		

Remark ~~ใช้น้ำแม่น้ำเจ้าพระยาในระบบผลิตน้ำ~~ using raw water from Chaopraya River

ELECTRICITY GENERATING AUTHORITY OF THAILAND

NORTH BANGKOK POWER PLANT

WATER ANALYSIS REPORT

FLOCCULATION PLANT 1& 2

Analysis No. 005/2542

Date of Sampling 12 ~~กุมภาพันธ์~~ May 2542

Date Reported ~~13 กุมภาพันธ์ 2542~~

Source / Parameter	Raw Water			Floc.1	Floc.2		TISI. 257 - 2521	
	River	Deep Well # 3	Deep Well # 5	Clear Well	Clear Well	Drinking Water	Standards (max.)	Possible allow (max.)
pH	7	6.9	7.2	6.5	6.7	6.7	6.5-8.5	<9.2
Conductivity (us/cm)	500	640	640	510	540	530		
Turbidity (NTU)	21	3.2	0.5	0.9	0.4	0.3	5	20
Total Hardness(ppm as $CaCO_3$)	134	104	112	134	134	130	300	500
Calcium (ppm as Ca)	38.4	32	36	40	40.8	39.2		
Magnesium (ppm as Mg)	9.1	5.8	5.3	8.2	7.7	7.7		
Iron (ppm as Fe)	1.4	1.2	4.7	0.4	0.1	0.1	0.5	1
Chloride (ppm as Cl^-)	38	11	6	37	44	43	250	600
Sulfate (ppm as SO_4)	124.1	24.8	6.71	132.9	130.8	127.5	200	250
Silica (ppm as SiO_2)	13.3	30.7	26.7	10.7	10.9	10.7		
Bicarbonate (ppm as HCO_3^-)	81.2	339	355.2	62.9	71	69		
Total Alkalinity (ppm as $CaCO_3$)	66.6	278.3	291.5	51.6	58.3	56.6		

Remark ~~ใช้น้ำแม่น้ำเจ้าพระยาในระบบผลิตน้ำ~~ using raw water from Chaopraya River

ELECTRICITY GENERATING AUTHORITY OF THAILAND

NORTH BANGKOK POWER PLANT

WATER ANALYSIS REPORT

FLOCCULATION PLANT 1& 2

Analysis No. 004/2542

Date of Sampling 21 ~~พฤษภาคม~~ April 2542

Date Reported ~~22 พฤษภาคม 2542~~

Source / Parameter	Raw Water			Floc.1	Floc.2		TISI 257 - 2521	
	River	Deep Well		Clear Well	Clear Well	Drinking Water	Standards (max.)	Possible alert (max.)
		# 3	# 5					
pH	7.1	7	7.2	6.9	6.9	7.1	6.5-8.5	<9.2
Conductivity (us/cm)	440	630	630	430	460	475		
Turbidity (NTU)	23	7.4	7.7	1	2.4	0.8	5	20
Total Hardness(ppm as $CaCO_3$)	128	114	110	122	130	130	300	500
Calcium (ppm as Ca)	36.8	31.2	32.8	35.2	39.6	37.6		
Magnesium (ppm as Mg)	8.6	8.6	6.7	8.2	8.6	8.6		
Iron (ppm as Fe)	1	0.9	1.1	nil	nil	nil	0.5	1
Chloride (ppm as Cl^-)	30	10	5	28	36	35	250	600
Sulfate (ppm as SO_4)	100.6	13.4	22.1	101.9	107.4	104	200	250
Silica (ppm as SiO_2)	10.7	32.6	29.4	12.3	11.5	12		
Bicarbonate (ppm as HCO_3^-)	109.6	345.1	353.3	99.4	87.2	101.5		
Total Alkalinity (ppm as $CaCO_3$)	90	283.3	290	81.6	71.6	83.3		

Remark ~~ใช้น้ำแม่น้ำเจ้าพระยาในระบบผลิตน้ำ~~ using raw water from Chaopraya River

ELECTRICITY GENERATING AUTHORITY OF THAILAND

NORTH BANGKOK POWER PLANT

WATER ANALYSIS REPORT

FLOCCULATION PLANT 1& 2

Analysis No. 003/2542

Date of Sampling 17 ~~มีนาคม~~ March 2542

Date Reported ~~29 มีนาคม 2542~~

Source / Parameter	Raw Water			Floc.1	Floc.2		TISI 257 - 2521	
	River	Deep Well		Clear Well	Clear Well	Drinking Water	Standards (max.)	Possible allow (max.)
		# 3	# 5					
pH	7.3	7.0	7.2	7.2	7.6	7.6	6.5-8.5	<9.2
Conductivity (us/cm)	2450	580	580	680	570	580		
Turbidity (NTU)	34	5.6	2.1	1.5	4.5	0.4	5	20
Total Hardness(ppm as $CaCO_3$)	276	110	112	114	152	112	300	500
Calcium (ppm as Ca)	41.6	32	32.8	32	32.8	32.8		
Magnesium (ppm as Mg)	41.3	7.2	7.2	8.2	16.8	7.2		
Iron (ppm as Fe)	0.2	0.4	3	nil	0.1	nil	0.5	1
Chloride (ppm as Cl^-)	615	11	5	40	215	5	250	600
Sulfate (ppm as SO_4)	87.2	10.1	16.8	15.4	67.1	12.1	200	250
Silica (ppm as SiO_2)	6.1	26.2	30.2	27.2	6.7	27.2		
Bicarbonate (ppm as HCO_3^-)	140.0	343.0	355.2	332.9	138.0	343.0		
Total Alkalinity (ppm as $CaCO_3$)	115.0	281.7	291.7	273.3	113.8	281.7		

Remark ~~ใช้น้ำบาดาลบ่อ 5 ในระบบผลิตน้ำ~~ using raw water from deep well # 5

ELECTRICITY GENERATING AUTHORITY OF THAILAND

NORTH BANGKOK POWER PLANT

WATER ANALYSIS REPORT

FLOCCULATION PLANT 1& 2

Analysis No. 002/2542

Date of Sampling 10 ~~กุมภาพันธ์~~ February 2542

Date Reported ~~11 กุมภาพันธ์ 2542~~

Parameter \ Source	Raw Water			Floc.1	Floc.2		TISI 257 - 2521	
	River	Deep Well # 3	Deep Well # 5	Clear Well	Clear Well	Drinking Water	Standards (max.)	Possible allow (max.)
pH	7.1	7.0	7.2	7.0	7.0	7.3	6.5-8.5	<9.2
Conductivity (us/cm)	700.0	680.0	620.0	620.0	590.0	600.0		
Turbidity (NTU)	16.0	3.0	2.4	5.0	1.5	0.6	5	20
Total Hardness(ppm as $CaCO_3$)	62.0	58.0	56.0	62.0	61.0	59.0	300	500
Calcium (ppm as Ca)	15.2	17.2	16.8	18.0	14.4	18.0		
Magnesium (ppm as Mg)	5.8	3.6	3.4	4.1	6.0	3.4		
Iron (ppm as Fe)	0.5	0.7	0.2	0.2	0.1	0.1	0.5	1
Chloride (ppm as Cl^-)	120.0	14.0	5.0	5.0	94.0	15.0	250	600
Sulfate (ppm as SO_4)	40.3	16.8	20.1	10.1	46.9	46.9	200	250
Silica (ppm as SiO_2)	14.1	34.7	34.7	34.7	14.7	36.0		
Bicarbonate (ppm as HCO_3^-)	131.9	332.9	349.1	349.1	117.7	330.8		
Total Alkalinity (ppm as $CaCO_3$)	108.3	273.3	286.7	286.7	96.6	271.7		

Remark ~~ใช้น้ำบาดาลบ่อ 5 ในระบบผลิตน้ำ~~ using raw water from deep well # 5

ELECTRICITY GENERATING AUTHORITY OF THAILAND

NORTH BANGKOK POWER PLANT

WATER ANALYSIS REPORT

FLOCCULATION PLANT 1& 2

Date of Sampling 13 ~~มกราคม~~ January 2542

Analysis No. 001/2542

Date Reported ~~14 มกราคม 2542~~

Parameter \ Source	Raw Water			Floc.1	Floc.2		TISI 257 - 2521	
	River	Deep Well # 3	Deep Well # 5	Clear Well	Clear Well	Drinking Water	standards (max.)	Possible allow (max.)
pH	7.3	6.9	7.3	7.0	6.8	6.9	6.5-8.5	<9.2
Conductivity (us/cm)	300.0	600.0	680.0	295.0	325.0	325.0		
Turbidity (NTU)	32.0	3.5	3.1	0.5	0.5	0.5	5	20
Total Hardness(ppm as $CaCO_3$)	100.0	120.0	114.0	86.0	90.0	90.0	300	500
Calcium (ppm as Ca)	22.4	30.4	28.8	24.0	23.2	24.0		
Magnesium (ppm as Mg)	10.6	10.6	10.1	6.2	7.7	7.2		
Iron (ppm as Fe)	2.7	1.2	0.7	nil	nil	nil	0.5	1
Chloride (ppm as Cl^-)	24.0	11.0	6.0	23.0	30.0	31.0	250	600
Sulfate (ppm as SO_4)	26.8	14.8	23.5	30.2	55.0	46.9	200	250
Silica (ppm as SiO_2)	10.1	32.0	29.9	13.3	12.8	12.3		
Bicarbonate (ppm as HCO_3^-)	131.9	334.9	351.2	113.7	97.4	99.5		
Total Alkalinity (ppm as $CaCO_3$)	108.4	275.1	288.4	93.3	80.0	81.7		

Remark ~~ใช้น้ำดิบจากแม่น้ำเจ้าพระยาในระบบผลิตน้ำดื่ม~~ using raw water from Chaopraya River

Attachment 2

Condenser Cooling Water Inlet Temperater 2540-2543

		January	February	March	April	May	June	July	August	September	October	November	December
2541	Unit # 1	28	28	30.5	31.3	32.2	31.6	30.5	-	30.1	29.8	28.4	25.8
	Unit # 2	28.3	28.9	30.1	31	31.6	31	29.4	-	30.1	29.8	28	25.4
	Unit # 3	28.6	29.8	30.5	31.6	32.4	31.6	30.9	-	30.3	29.9	-	26
2542	Unit # 1	-	-	30.2	30.4	30	29.9	30.2	29.59	29.8	29.1	28.3	28.3
	Unit # 2	-	26.3	28.7	28.8	-	28.7	28.8	28.3	28.4	27.6	26.3	-
	Unit # 3	-	-	29.5	30.5	30.1	30	30.3	29.7	29.9	29.2	28.1	24.8
2543	Unit # 1	28.3	28.3	28.3	-	28.3	-	-					
	Unit # 2	24.8	28.3	28.1	28.8	29.8	30	28.3					
	Unit # 3	-	-	30.7	-	-	-	-					

Remark : "–" Shutdown of unit